"THE MATERIAL HEREIN IS FOR INFORMATION PURPOSES ONLY AND IS SUBJECT TO CHANGE WITHOUT NOTICE. DIGITAL EQUIPMENT CORPORATION ASSUMES NO RESPONSIBILITY FOR ANY ERRORS WHICH MAY APPEAR HEREIN."

FIELD MAINTENANCE PRINT SET

"THIS DRAWING AND SPECIFICATIONS, HEREIN, ARE THE PROPERTY OF DIGITAL EQUIPMENT CORPORATION AND SHALL NOT BE REPRODUCED OR COPIED OR USED IN WHOLE OR IN PART AS THE BASIS FOR THE MANUFACTURE OR SALE OF ITEMS WITHOUT WRITTEN PERMISSION. COPYRIGHT ©1977, DIGITAL EQUIPMENT CORPORATION."

TABLE OF CONTENTS

B-DD-TMØ3-Ø	CONTROLLER TMØ3
D-CS-M89Ø1-YB	45 IPS DATA SYNC
D-CS-M89Ø1-YC	75 IPS DATA SYNC
D-CS-M8932-Ø-1	TAPE CONTROL PE
D-UA-M8932-Ø-Ø	(Page 1)
B-PL-M8932-Ø-Ø	
D-CS-M8933-Ø-1	TAPE CONTROL COMMON MODE
D-UA-M8933-Ø-Ø	(Page 1)
B-PL-M8933-Ø-Ø	
D-CS-M8934-Ø-1	TAPE CONTROL NRZ
D-UA-M8934-Ø-Ø	(Page 1)
B-PL-M8934-Ø-Ø	
D-CS-M89Ø5-YB	MAINTENANCE REGISTER
D-CS-M89Ø6-Ø-1	16 BIT DATA FORMATTER
D-CS-M8937-Ø-1	TMØ3 CONTROL & WRITE DRIVER
D-UA-M8937-Ø-Ø	(Page 1)
B-PL-M8937-Ø-Ø	
D-CS-M89Ø8-Ø-1	RECEIVER TERMINATOR
D-CS-M89Ø8-YA-Ø	RECEIVER TERMINATOR
D-CS-M89Ø9-YA-Ø	MASS BUSS INTERFACE
D-CS-M8934-YA-1	TAPE CONTROL NRZI (75 IPS)
B-PL-M8934-YA-Ø	
D-UA-M8934-YA-Ø	(Page 1)
D-CS-M59Ø3-Ø-1	DRIVE TRANSCEIVER
D-BS-TMØ2-Ø-2	MASS BUSS TRANSCEIVER
D-BS-TU16-Ø-2	MASS BUSS TRANSCEIVER (TU16)
D-MU-TMØ3-Ø-MU	MODULE UTILIZATION
K-WL-TMØ3-Ø-WL	WIRE LIST (COMPLETE)
D-AD-7013616-Ø-Ø	HARNESS/LOGIC ASSY. (TMØ3)
E-IA-5409728-Ø-Ø	REGULATOR BOARD
D-CS-5409728-Ø-1	REGULATOR BOARD
D-CS-M89Ø1-YD-1	125 IPS DATA SYNC
D-UA-M89Ø1-YD-Ø	(PAGE 1)
B-PL-M89Ø1-YD-Ø	
D-CS-M8915-Ø-1	
D-UA-M8915-Ø-Ø	(PAGE 1)
B-PL-M8915-Ø-Ø	

UNIT VARIATIONS COVERED BY THIS PRINT SET
TMØ3-CA
TMØ3-CB
TMØ3-CE
TMØ3-CF
TMØ3-FA
TMØ3-FB
TMØ3-FE
TMØ3-FF
TMØ3-CN
TMØ3-FN

TMØ3

Field Maintenance Print Set

Digital Equipment Corporation

PRINT SET ORDER NO.
MP00349

REVISIONS	REV.	CHG. NO.	DATE
	A	TMØ3-00001	7-NOV-77
	B	TMØ3-2	2-78

USED ON OPTION/MODEL

SHEET 1 OF 1

DRN.	T.Quillin	DATE 1APR77
CHK'D		DATE 20APR77
PROJ. ENG.		DATE 5-23-77
FIELD SERV.		DATE 04-MAY-77

digital

TITLE: TMØ3 PRINT SET

SIZE	CODE	NUMBER	REV.
B	TC	TMØ3-Ø-1	B

DIST.

DRB 124

digital EQUIPMENT CORPORATION MAYNARD MASSACHUSETTS

DRAWING DIRECTORY

"THIS DRAWING AND SPECIFICATIONS, HEREIN, ARE THE PROPERTY OF DIGITAL EQUIPMENT CORPORATION AND SHALL NOT BE REPRODUCED OR COPIED OR USED IN WHOLE OR IN PART AS THE BASIS FOR THE MANUFACTURE OR SALE OF ITEMS WITHOUT WRITTEN PERMISSION. COPYRIGHT © 1977 , DIGITAL EQUIPMENT CORPORATION"

CUSTOMER PRINT SET INDEX

SEQUENCE SEQUENCE

THIS IS PRINT SET

FOR TABLE OF CONTENTS SEE DWG. NUMBER B-TC-TMØ3-Ø-1

UNIT VARIATIONS

VAR	TITLE	PRINT SET
TMØ3-CA	18 BIT PE & NRZI 115V	
TMØ3-CB	18 BIT PE & NRZI 230V	
TMØ3-CE	18 BIT PE & NRZI 115V	
TMØ3-CF	18 BIT PE & NRZI 230V	
TMØ3-FA	16 BIT PE & NRZI 115V	
TMØ3-FB	16 BIT NRZI 230V	
TMØ3-FE	16 BIT PE & NRZI FOR TU45 115V	
TMØ3-FF	16 BIT PE & NRZI FOR TU 45 230V	
TMØ3-CN	18 BIT PE & NRZI FOR TU77-230V	
TMØ3-FN	16 BIT PE & NRZI FOR TU77-230V	

REVISIONS

DATE	CHG. NO.	REV
11-77	TMØ3-00001	A
2-78	TMØ3-2	B

USED ON OPTION/MODEL

SHEET 1 OF 3

		DATE
DRN.	T.Quillin	30NOV76
CHK'D.	[signature]	20 MAY 77
PROJ. ENG.	[signature]	4-5-77
PROD.	[signature]	4-6-77
FIELD SERV.	[signature]	5-23-77

TITLE Controller, TMØ3

SIZE	CODE	NUMBER	REV
B	DD	TMØ3-Ø	B

DIST

DRB 106

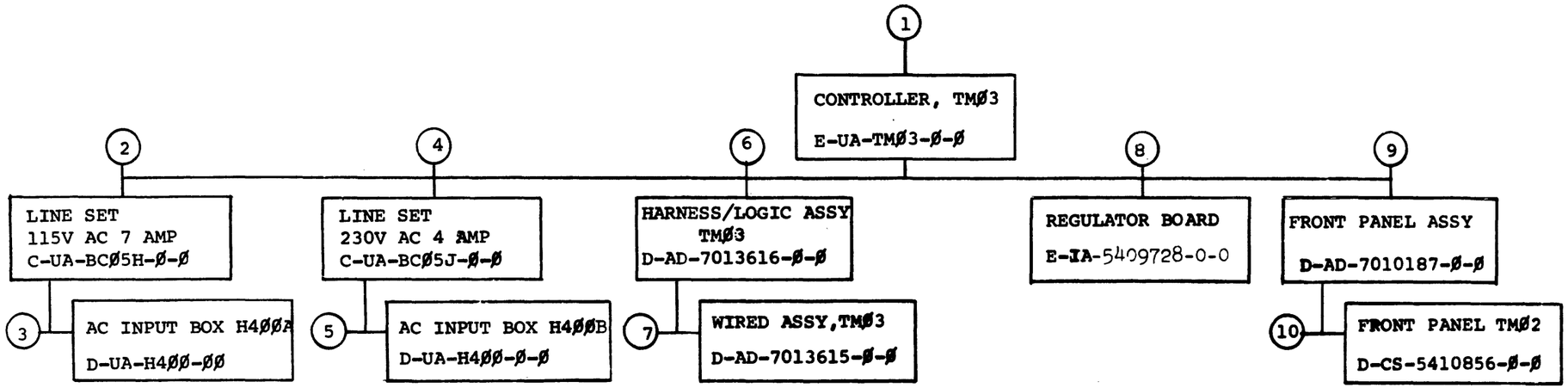

TITLE		SIZE	CODE	NUMBER	REV
CONTROLLER, TMØ3	SHEET 2 OF 3	B	DD	TMØ3-Ø	B

FIND NO.	DRAWING NO.	DESCRIPTION	TYPE
1	B-TC-TMØ3-Ø-1	TMØ3 TABLE OF CONTENTS	-
	MP00349	FIELD MAINTENANCE PRINT SET	-
	E-UA-TMØ3-Ø-Ø	CONTROLLER TMØ3	M
	A-PL-TMØ3-Ø-Ø	PARTS LIST	M
	D-CS-M89Ø8-Ø-1	RECEIVER TERMINATOR	E
	D-CS-M89Ø8-YA-1	RECEIVER TERMINATOR	E
	D-CS-M89Ø9-Ø-1	MASS BUSS INTERFACE	E
	D-CS-M59Ø3-YA-1	MASS BUS TERMINAL	E
	D-CS-M8914-Ø-1	18 BIT FIDDLER	E
	D-CS-M59Ø3-Ø-1	MASS BUS TERMINAL	E
	D-BS-TMØ2-2	MASS BUS RECEIVER	E
	D-BS-TU16-Ø-2	MASS BUS TRANSCEIVER	E
	D-CS-M89Ø1-YB	45 IPS DATA SYNC	E
	D-CS-M89Ø1-YC	75 IPS DATA SYNC	E
	D-CS-M89Ø1-YD-1	125 IPS DATA SYNC	E
	D-CS-M8932-Ø-1	TAPE CONTROL PHASE ENC.	E
	D-CS-M8933-Ø-1	TAPE CONTROL COMMON MODE	E
	D-CS-M8934-Ø	TAPE CONTROL NRZI	E
	D-CS-M89Ø5-YB	MAINTENANCE REGISTER	E
	D-CS-M89Ø6-Ø-1	16 BIT FIDDLER	E
	D-CS-M89Ø9-YA-1	MASS BUS INTERFACE	E
	D-CS-M8914-Ø-1	18 BIT FIDDLER FORMAT	E
	D-CS-M8915-Ø-1	UNIVERSAL DATA FORMATTER	E
	D-CS-M8937-Ø-1	CONNECTOR TERMINATOR	E
	D-IA-7010075-Ø-Ø	LOGIC, BOX	M
	D-CS-5411128-Ø-1	MOUNT, SELECT SWITCH	E
	A-DC-7412377-Ø-Ø	DECAL, CONTROLLER	M
	D-UA-H74ØDA-Ø	POWER SUPPLY	M
	C-IA-7010418-Ø-Ø	CABLE FAN	M
	C-IA-7412368-Ø-Ø	BRACKET SHIPPING	M
	C-MD-7409479-Ø-Ø	PLATE, PRESSURE	M
	A-PL-7014352-Ø-Ø	CODING KEYS, SET OF	M
	E-MD-7414624-Ø-Ø	COVER SIDE	M
	C-MD-7414626-Ø-Ø	CARD GUIDE REWORK	M
	D-MU-TMØ3-Ø-MU	MODULE UTILIZATION	E
	D-CS-M8934-YA-1	TAPE CONTROL NRZI 75 IPS	E
	A-SP-TMØ3-Ø-4	ACCEPTANCE SPEC	
	A-SP-TMØ3-Ø-3	ENGINEERING SPEC	
2	C-UA-BCØ5H-Ø-Ø	LINE SET 115V AC 7 AMP	M
3	~~D-UA-H4ØØ-Ø-Ø~~	~~AC INPUT BOX, H400A~~	M
	A-PL-H4ØØ-Ø-Ø	AC INPUT BOX	M
	D-IA-5309845-Ø-Ø	BOX	M
	C-MD-5309849-Ø-Ø	COVER	M

FIND NO.	DRAWING NO.	DESCRIPTION	TYPE
3	A-DC-5309899-Ø-Ø	POWER CONTROL DECAL 115V	M
	C-IA-5409824-Ø-Ø	POWER CONTROL BOARD 115V	M
4	C-UA-BCØ5J-Ø-Ø	LINE SET 23ØV AC 4 AMP	
5	D-UA-H4ØØ-Ø-Ø	AC INPUT BOX H4ØØB	M
	A-PL-H4ØØ-Ø-Ø	AC INPUT BOX	M
	D-IA-5309845-Ø-Ø	BOX	M
	C-MD-5309849-Ø-Ø	COVER	M
	A-DC-5309900-Ø-Ø	POWER CONTROL (DECAL 23ØV)	M
	C-IA-5409825-Ø-Ø	POWER CONTROL BOARD 23ØV	M
6	D-AD-7013616-Ø-Ø	HARNESS/LOGIC ASSY (TMØ3)	E/M
	E-IA-7013614-Ø-Ø	HARNESS/LOGIC (TMØ3)	E/M
7	D-AD-7013615-Ø-Ø	WIRED ASSY (TMØ3)	E/M
	A-DC-7411881-1-Ø	DECAL LOGIC, REVISIONS	M
8	E-IA-5409728-Ø-Ø	REGULATOR BOARD	M
	D-CS-5409728-Ø-1	REGULATOR BOARD	M
	C-MD-5510892-1	#1 THERMAL STRIP	M
	C-MD-5510891-1	#2 THERMAL STRIP	M
	C-IA-5310126-Ø-Ø	HOLDER, CAPACITOR	M
	C-MD-5309779-Ø-Ø	CONTACT, COMMON CAPACITOR	M
	C-MD-5309781-Ø-Ø	CONTACT CAPACITOR	M
9	D-AD-7010187-Ø-Ø	FRONT PANEL ASSY	M
10	D-CS-5410856-Ø-Ø	FRONT PANEL TMØ2	E

TYPE: E ELECTRICAL
M MECHANICAL
E/M ELECTRO/MECHANICAL

digital

TITLE	SHEET	SIZE	CODE	NUMBER	REV
CONTROLLER, TMØ3	3 OF 3	B	DD	TMØ3-Ø	

DRB 108A

"THIS DRAWING AND SPECIFICATIONS, HEREIN, ARE THE PROPERTY OF DIGITAL EQUIPMENT CORPORATION AND SHALL NOT BE REPRODUCED OR COPIED OR USED IN WHOLE OR IN PART AS THE BASIS FOR THE CONSTRUCTION OR SALE OF ITEMS WITHOUT WRITTEN PERMISSION.
COPYRIGHT © 1976 DIGITAL EQUIPMENT CORPORATION"

NOTES: 1. W3 THRU W6 ARE OPTIONAL JUMPERS.

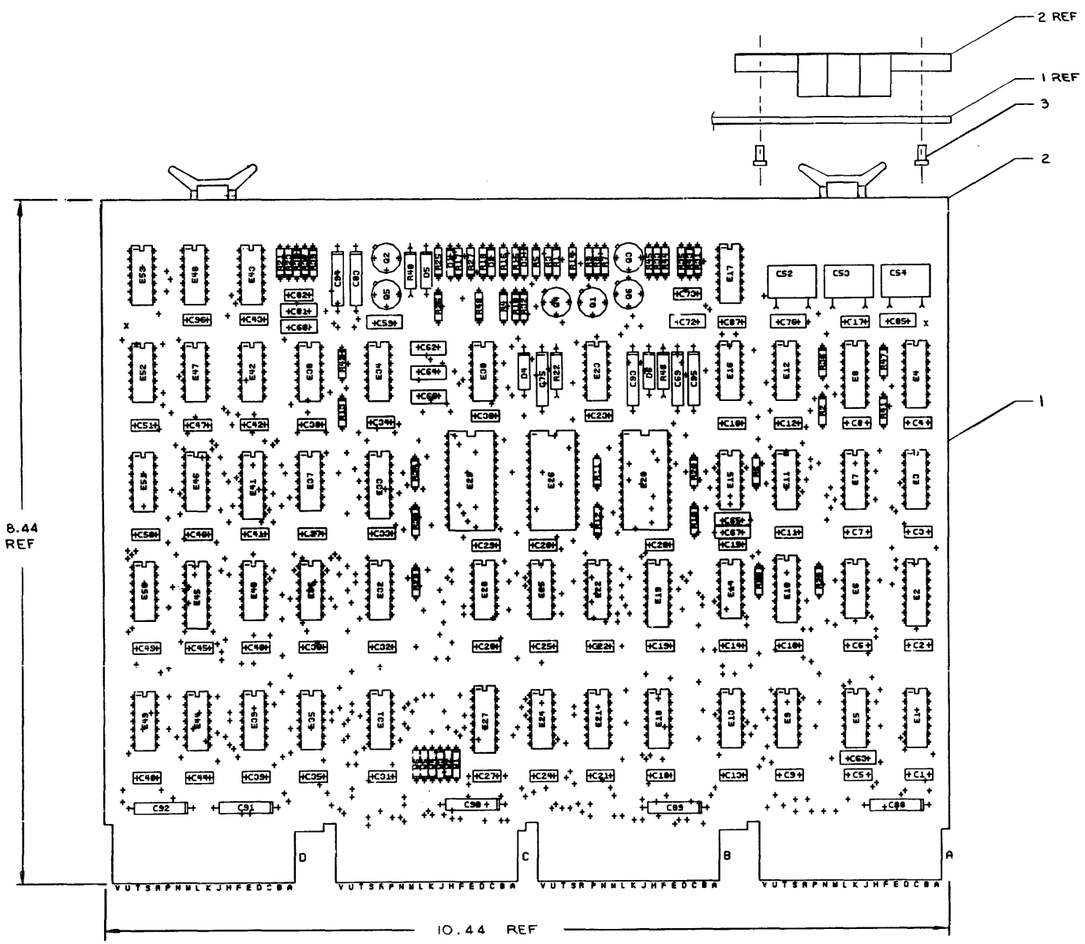

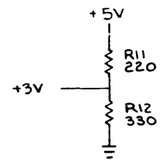

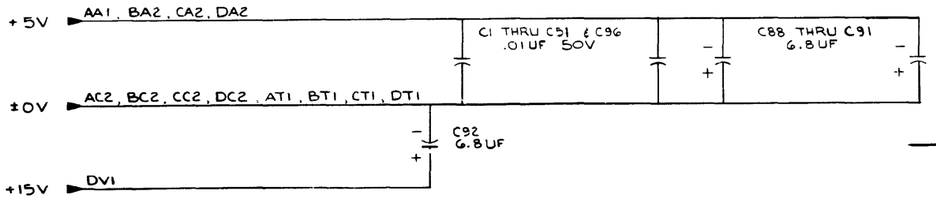

74172	12	24
4024	9	13
74174	8	16
74175	8	16
74193	8	16
7473	11	4
7476	13	5
IC TYPE	GND	+5V

GND AND 5V ARE USUALLY PIN 7 AND 14 RESPECTIVELY EXCEPTIONS ARE STATED ABOVE

IC PIN LOCATIONS

QTY	REF. DESIGNATION	DESCRIPTION	PART NO.	ITEM NO.
				50
				49
				48
2	W1, W2	JUMPER INSULATED	90-9185	47
3	E13, 51, 53	IC 7408	1910155	46
3	E20, 26, 29	IC 74172	1911293	45
3	E17, 23, 43	IC 4044	1911039	44
2	E16, 38	IC 4024	1911038	43
1	E10	IC 74174	1910652	42
1	E19	IC 74175	1910651	41
3	R2, 19, 29	RES 560 1/4W 5%	1301890	40
6	E1, 3, 12, 34, 42, 47	IC 74197	1910035	39
3	E2, 27, 45	IC 74193	1910018	38
2	E14, 31	IC 7486	1910011	37
2	E4, 8	IC 74123	1910436	36
2	E5, 15	IC 7416	1909928	35
1	E30	IC 8242	1909712	34
2	E22, 50	IC 7404	1909686	33
4	E9, 24, 28, 35	IC 7401	1905590	32
4	E18, 36, 44, 49	IC 7473	1905587	31
2	E33, 41	IC 7476	1905585	30
2	E21, 39	IC 7450	1905580	29
2	E25, 48	IC 7400	1905575	28
8	E6, 7 11, 32, 37, 40, 46, 52	IC 7474	1905547	27
3	R8, R37, R43	RES 4.7K 1/4W 5%	1300447	26
3	R7, R21, R31	RES 8.2K 1/4W 5%	1303179	25
3	R10, R38, R44	RES 330K 1/4W 5%	1302091	24
3	R22, R40, R46	RES 120 1/2W 5%	1300243	23
3	R36, R41, R47	RES 47K 1/4W 5%	1302177	22
3	R9, R23, R33	RES 2.7K 1/4W 5%	1300426	21
7	R6, R14, R20, R30 R35, R42, R48	RES 1K 1/4W 5%	1300365	20
3	R32, R39, R45	RES 470 1/4W 5%	1300316	19
3	R1, R17, R27	RES 390 1/4W 5%	1300309	18
1	R12	RES 330 1/4W 5%	1300295	17
4	R3, R11, R16, R26	RES 220 1/4 W 5%	1300271	16
9	R4, R5, R13, R15, R18, R24, R25, R28, R34	RES 100 1/4W 5%	1300229	15
3	D4, D5, D6	DIODE 1N752A 5.6V 5% ZENER	112808	14
3	D1, D2, D3	DIODE DG64	1100114	13
3	C72, C76, C81	CAP 270 PF 100V D.M.	1000022	12
3	C52, C53, C54	CAP 1000PF 100V 5% D.M.	1002428	11
8	C88 THRU C95	CAP 6.8UF 35V 10% T	1005306	10
55	C1 THRU C51, C73, C82 C87, C96	CAP .01UF 50V	1001610	9
3	C69, C75, C83	CAP .015UF 100V 10% MYLAR	1002630	8
3	C62, C64, C66	CAP 1000 PF 100V D.M.	1000042	7
3	C59, C60, C85	CAP 470 PF D.M.	1000024	6
6	Q1 THRU Q6	TRANSISTOR DEC G531 B	1509338	5
3	C63 C65, C67	CAP 220PF 100V D.M.	1000021	4
8		EYELET	9006732	3
4		HANDLE, FLIP-CHIP (MAGENTA)	9008337-6	2
1		ETCHED CIRCUIT BOARD	5010467	1
REF		MODULE ECO HISTORY	B-MH-M8901-	REF
REF		ASSY/DRILLING HOLE LAYOUT	D-AH-M8901-	REF
REF		X-Y COORDINATE HOLE LOCATION	K-CO-M8901-	REF

PARTS LIST

ETCH BOARD REV. E

REV.	CHANGE NO.	REVISIONS
J	M8901-00010	REV & REDRAWN

FIRST USED ON OPTION MODEL

DEC NO.	EIA NO.	DEC NO.	EIA NO.

SEMICONDUCTOR CONVERSION CHART

DRN. Chg. jm 1 DATE 19 NOV 76
CH'D. E. Mucci DATE 12-28-76
ENG. J. Kopec DATE 1-17-77
PROJ. ENG. J. Kopec DATE 1-17-77
PROD. DATE
NEXT HIGHER ASSY
SCALE
SHEET 1 OF 7

digital

TITLE DATA SYNC (DS1)

SIZE D | CODE CS | NUMBER M8901-YB-1 | REV. J

DIST.

"THIS DRAWING AND SPECIFICATIONS, HEREIN, ARE THE PROPERTY OF DIGITAL EQUIPMENT CORPORATION AND SHALL NOT BE REPRODUCED OR COPIED OR USED IN WHOLE OR IN PART AS THE BASIS FOR THE MANUFACTURE OR SALE OF ITEMS WITHOUT WRITTEN PERMISSION.
COPYRIGHT ©1974, DIGITAL EQUIPMENT CORPORATION"

BIT STROBE AND WINDOW

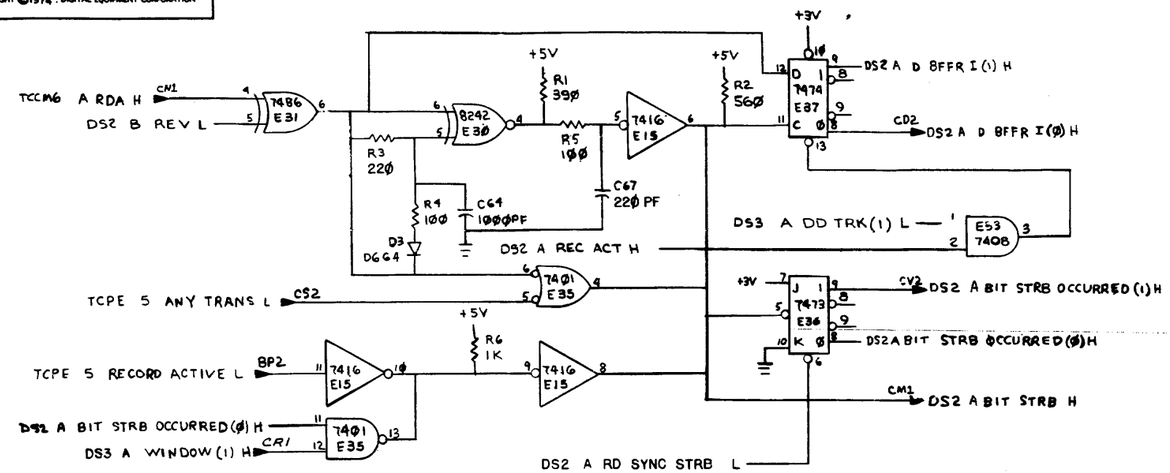

	SLOT 1	SLOT 2	SLOT 3
X	SINGLE DD TRK H		INC COND H
Y(1) H	CER 1 (H)		INC DATA(1) H

USE X, Y, CHART TO DETERMINE INPUTS & OUTPUTS OF 74175 FLOP.

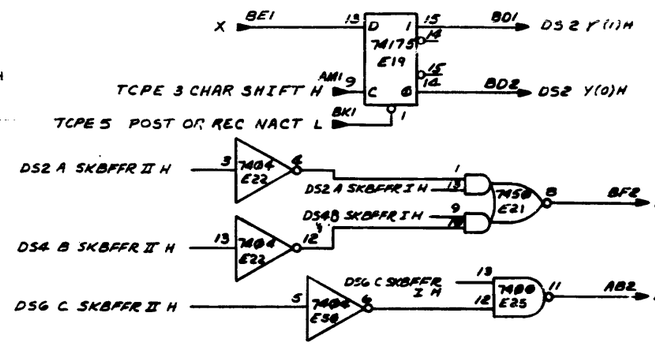

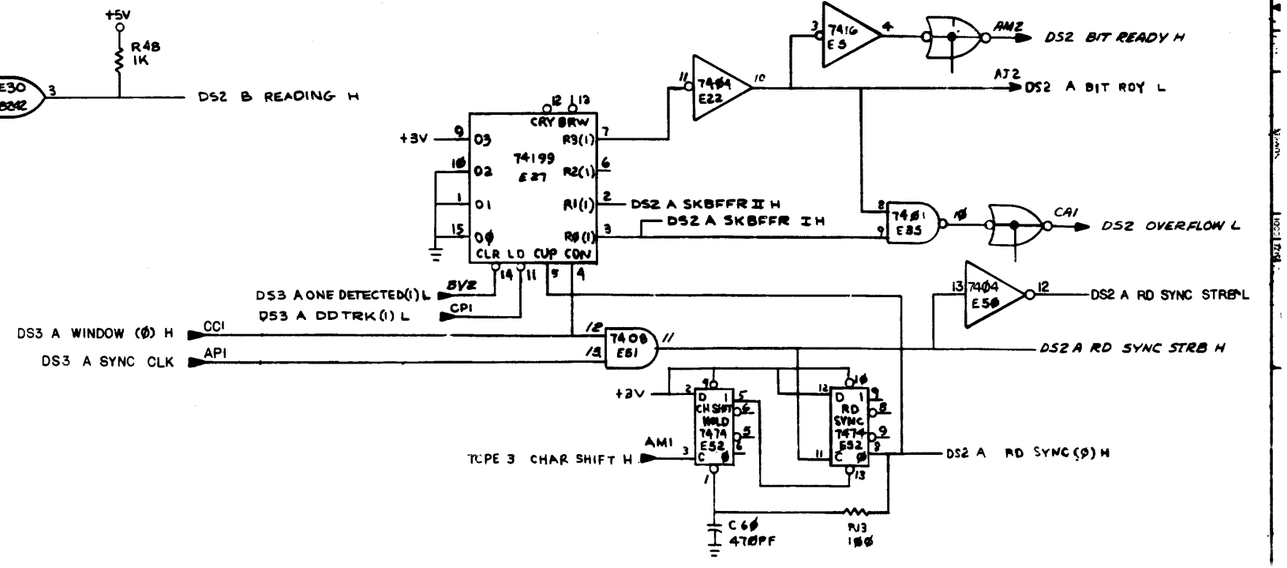

NOTE
1. PREFIX "A" IS TO BE INTERPRETED AS FOLLOWS:
   MODULE IN SLOT 1 — A IS BIT 2
   MODULE IN SLOT 2 — A IS BIT P
   MODULE IN SLOT 3 — A IS BIT 7
   EXAMPLE:
   A RDA H — CO1 N1 = RDA 2 H
   A RDA H — CO2 N1 = RDA P H
   A RDA H — CO3 N1 = RDA 7 H
2. M8901 MODULES ARE LOCATED IN SECTIONS C D E F OF TMØ2 LOGIC. THEREFORE PINS IN SECTION A OF THE MODULE ARE LOCATED IN C ON THE BACKPLANE ETC.
3. PIN BK1 IS "TCPE 5 POST OR REC NACT L" ON ALL M8901'S WHEN IN TMØ2.

REVISIONS		
CHK	CHANGE NO	REV.

TITLE	SIZE	CODE	NUMBER	REV.
DATA SYNC (DS2)	D	CS	M8901-YB-1	J
SCALE	SHEET 2 OF 7	DIST.		

"THIS DRAWING AND SPECIFICATIONS, HEREIN, ARE THE PROPERTY OF DIGITAL EQUIPMENT CORPORATION AND SHALL NOT BE REPRODUCED OR COPIED OR USED IN WHOLE OR IN PART AS THE BASIS FOR THE MANUFACTURE OR SALE OF ITEMS WITHOUT WRITTEN PERMISSION.
COPYRIGHT © 1974, DIGITAL EQUIPMENT CORPORATION"

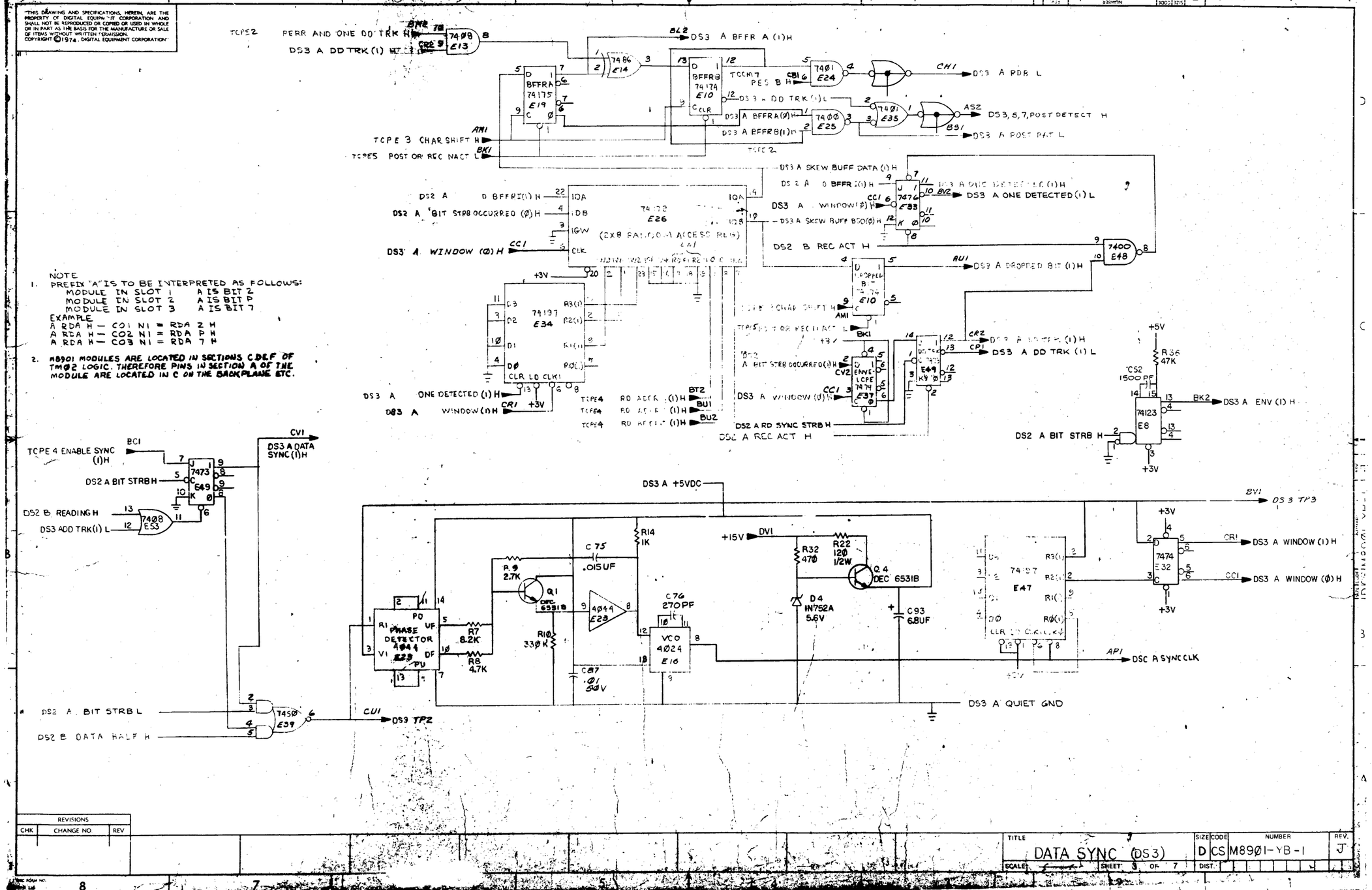

NOTE
1. PREFIX "A" IS TO BE INTERPRETED AS FOLLOWS:
   MODULE IN SLOT 1 A IS BIT 2
   MODULE IN SLOT 2 A IS BIT P
   MODULE IN SLOT 3 A IS BIT 7
   EXAMPLE
   A RDA H — CO1 N1 = RDA 2 H
   A RDA H — CO2 N1 = RDA P H
   A RDA H — CO3 N1 = RDA 7 H
2. M8901 MODULES ARE LOCATED IN SECTIONS C DEF OF TM02 LOGIC. THEREFORE PINS IN SECTION A OF THE MODULE ARE LOCATED IN C ON THE BACKPLANE ETC.

REVISIONS		
CHK	CHANGE NO	REV

TITLE	SIZE	CODE	NUMBER	REV.
DATA SYNC (DS3)	D	CS	M8901-YB-1	J
SCALE	SHEET 3 OF 7	DIST.		

"THIS DRAWING AND SPECIFICATIONS, HEREIN, ARE THE PROPERTY OF DIGITAL EQUIPMENT CORPORATION AND SHALL NOT BE REPRODUCED OR COPIED OR USED IN WHOLE OR IN PART AS THE BASIS FOR THE MANUFACTURE OR SALE OF ITEMS WITHOUT WRITTEN PERMISSION.
COPYRIGHT © 1974, DIGITAL EQUIPMENT CORPORATION"

BIT STROBE AND WINDOW

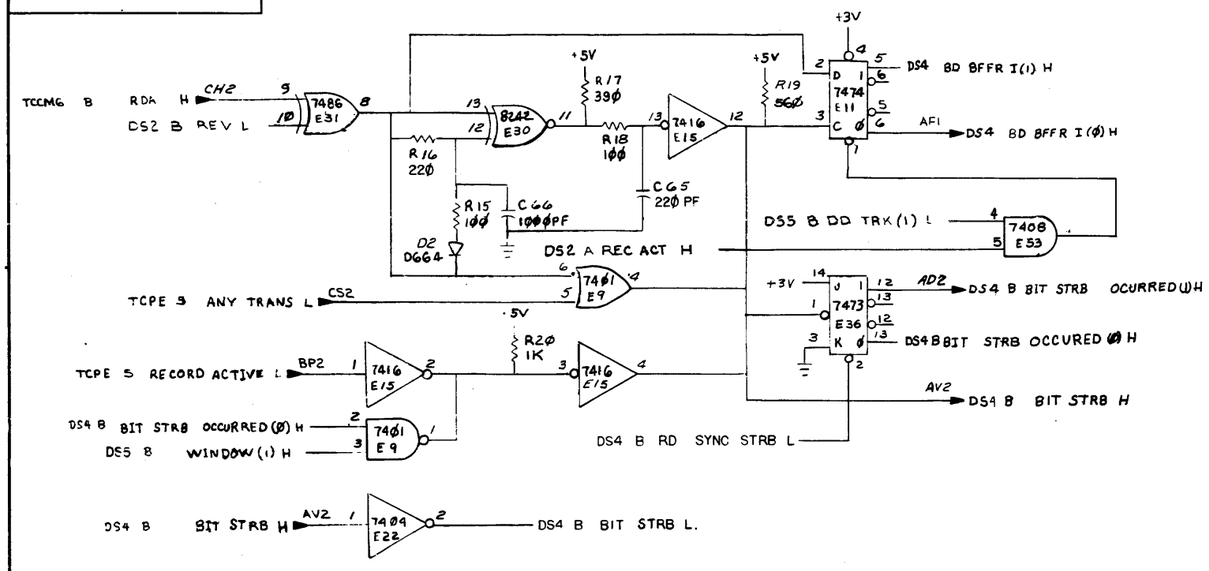

NOTE:
JUMPERS W1 THRU W6 INDICATES THE TAPE SPEED THE MODULE IS BUILT FOR. CHANGING THE JUMPERS DOES NOT CHANGE THE SPEED CAPABILITY OF THE MODULE.

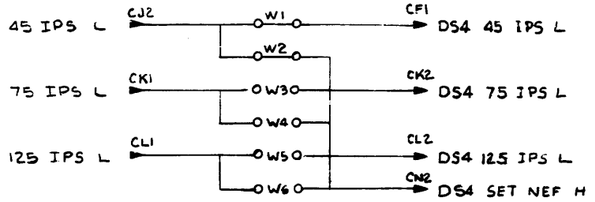

NOTE
PREFIX "B" IS TO BE INTERPRETED AS FOLLOWS:
MODULE IN SLOT 1 B IS BIT Ø
MODULE IN SLOT 2 B IS BIT 5
MODULE IN SLOT 3 B IS BIT 1
EXAMPLE:
B RDA H — CO1 CH2 = RDA Ø H
B RDA H — CO2 CH2 = RDA 5 H
B RDA H — CO3 CH2 = RDA 1 H

2. M8901 MODULES ARE LOCATED IN SECTIONS CDEF OF TM02 LOGIC. THEREFORE PINS IN SECTION A OF THE MODULE ARE LOCATED IN C ON THE BACKPLANE ETC.

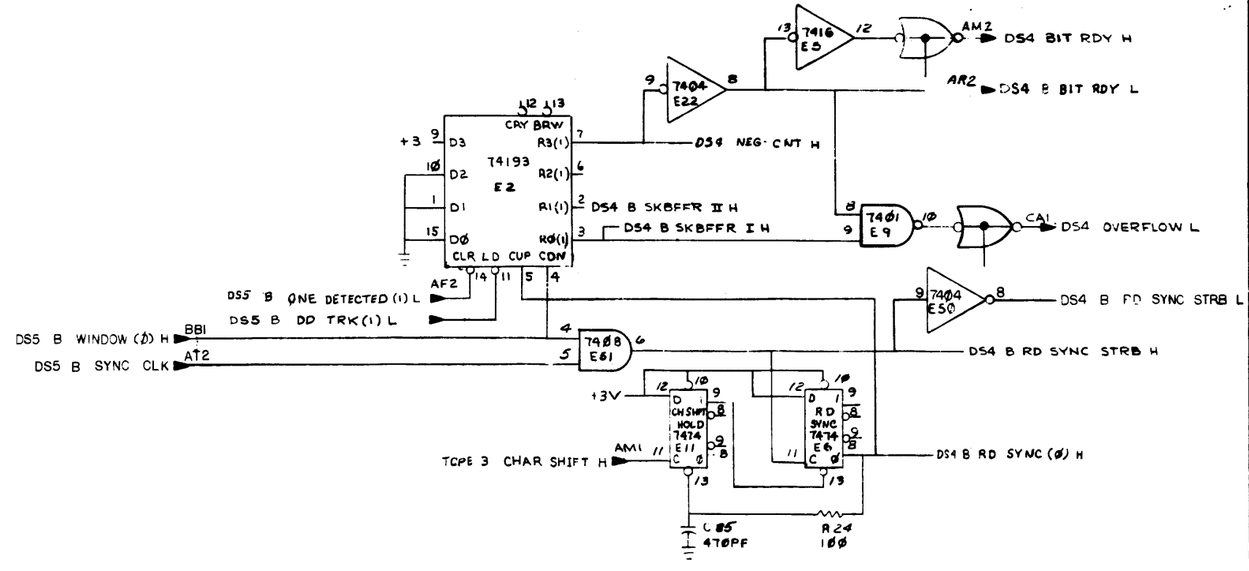

REVISIONS		
CHK	CHANGE NO.	REV.
	1	

TITLE	SIZE	CODE	NUMBER	REV.
DATA SYNC (DS4)	D	CS	M8901-YB-1	J
SCALE 1-1	SHEET 4 OF 7	DIST.		

"THIS DRAWING AND SPECIFICATIONS, HEREIN, ARE THE PROPERTY OF DIGITAL EQUIPMENT CORPORATION AND SHALL NOT BE REPRODUCED OR COPIED OR USED IN WHOLE OR IN PART AS THE BASIS FOR THE MANUFACTURE OR SALE OF ITEMS WITHOUT WRITTEN PERMISSION. COPYRIGHT © 1978, DIGITAL EQUIPMENT CORPORATION"

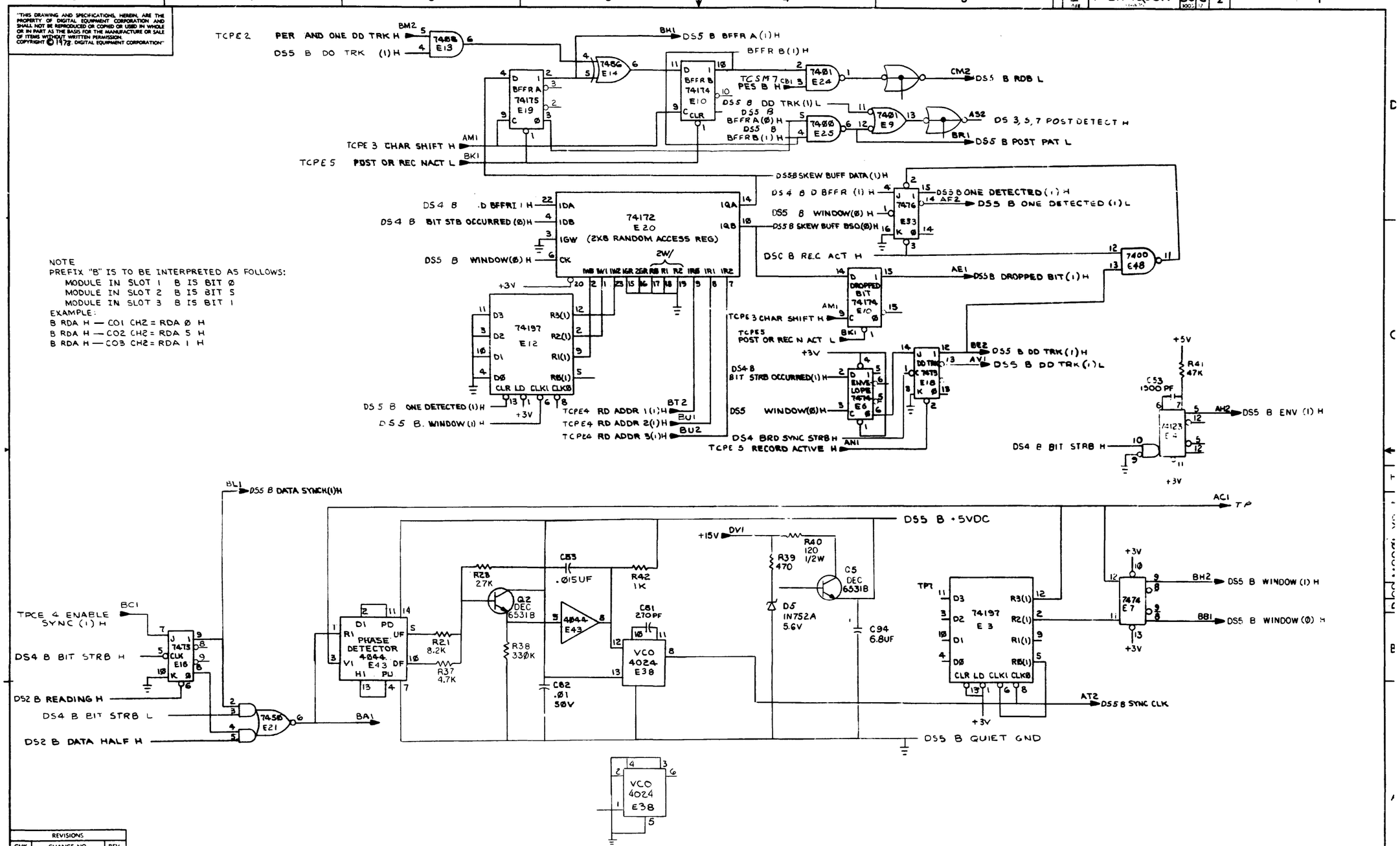

NOTE
PREFIX "B" IS TO BE INTERPRETED AS FOLLOWS:
MODULE IN SLOT 1 B IS BIT Ø
MODULE IN SLOT 2 B IS BIT 5
MODULE IN SLOT 3 B IS BIT 1
EXAMPLE:
B RDA H — CO1 CH2 = RDA Ø H
B RDA H — CO2 CH2 = RDA 5 H
B RDA H — CO3 CH2 = RDA 1 H

REVISIONS		
CHK	CHANGE NO	REV

TITLE	SIZE	CODE	NUMBER	REV.
DATA SYNC (DS5)	D	CS	M89Ø1-YB-1	J
SCALE	SHEET 5 OF 7	DIST.		

"THIS DRAWING AND SPECIFICATIONS, HEREIN, ARE THE PROPERTY OF DIGITAL EQUIPMENT CORPORATION AND SHALL NOT BE REPRODUCED OR COPIED OR USED IN WHOLE OR IN PART AS THE BASIS FOR THE MANUFACTURE OR SALE OF ITEMS WITHOUT WRITTEN PERMISSION.
COPYRIGHT ©1973 DIGITAL EQUIPMENT CORPORATION"

BIT STROBE AND WINDOW

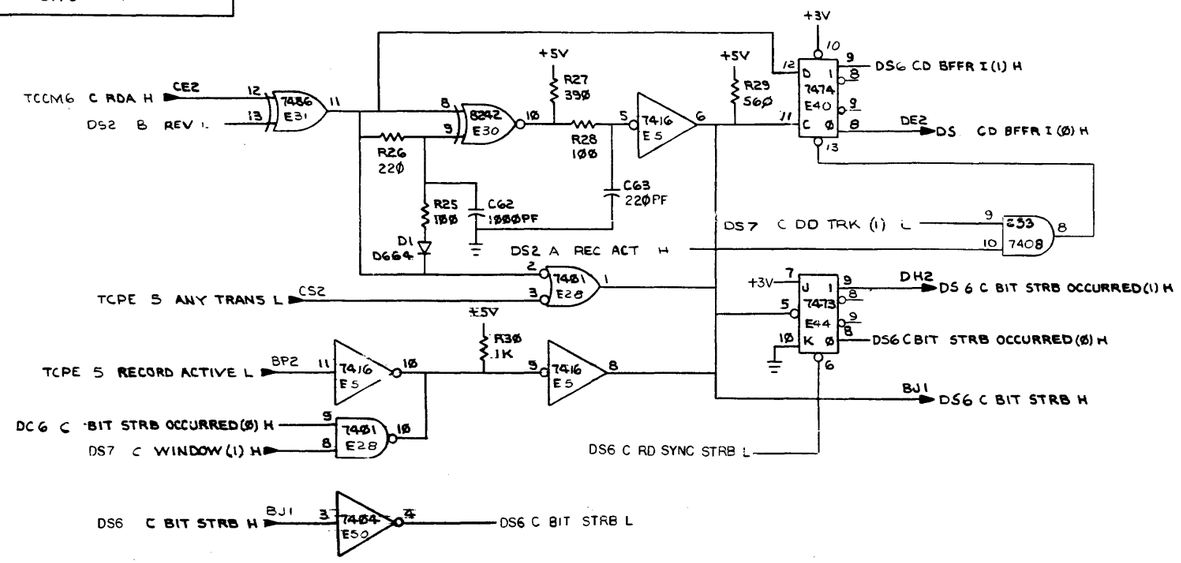

NOTE
PREFIX "C" IS TO BE INTERPRETED AS FOLLOWS:
MODULE IN SLOT 1 C IS BIT 4
MODULE IN SLOT 2 C IS BIT 6
MODULE IN SLOT 3 C IS BIT 3
EXAMPLE:
C RDA H — CO1 E2 = RDA 4 H
C RDA H — CO2 E2 = RDA 6 H
C RDA H — CO3 E2 = RDA 3 H

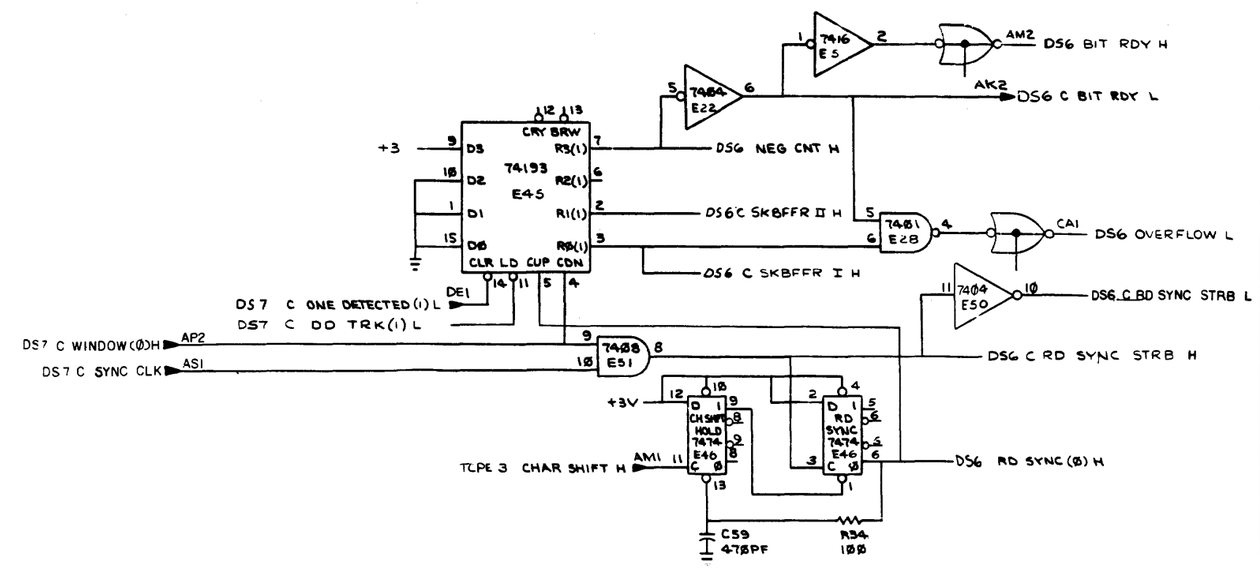

REVISIONS		
CHK	CHANGE NO.	REV.

TITLE	SIZE	CODE	NUMBER	REV.
DATA SYNC (DS6)	D	CS	M8901-YB-1	J
SCALE	SHEET 6 OF 7	DIST.		

"THIS DRAWING AND SPECIFICATIONS, HEREIN, ARE THE PROPERTY OF DIGITAL EQUIPMENT CORPORATION AND SHALL NOT BE REPRODUCED OR COPIED OR USED IN WHOLE OR IN PART AS THE BASIS FOR THE MANUFACTURE OR SALE OF ITEMS WITHOUT WRITTEN PERMISSION
COPYRIGHT ©1973 DIGITAL EQUIPMENT CORPORATION"

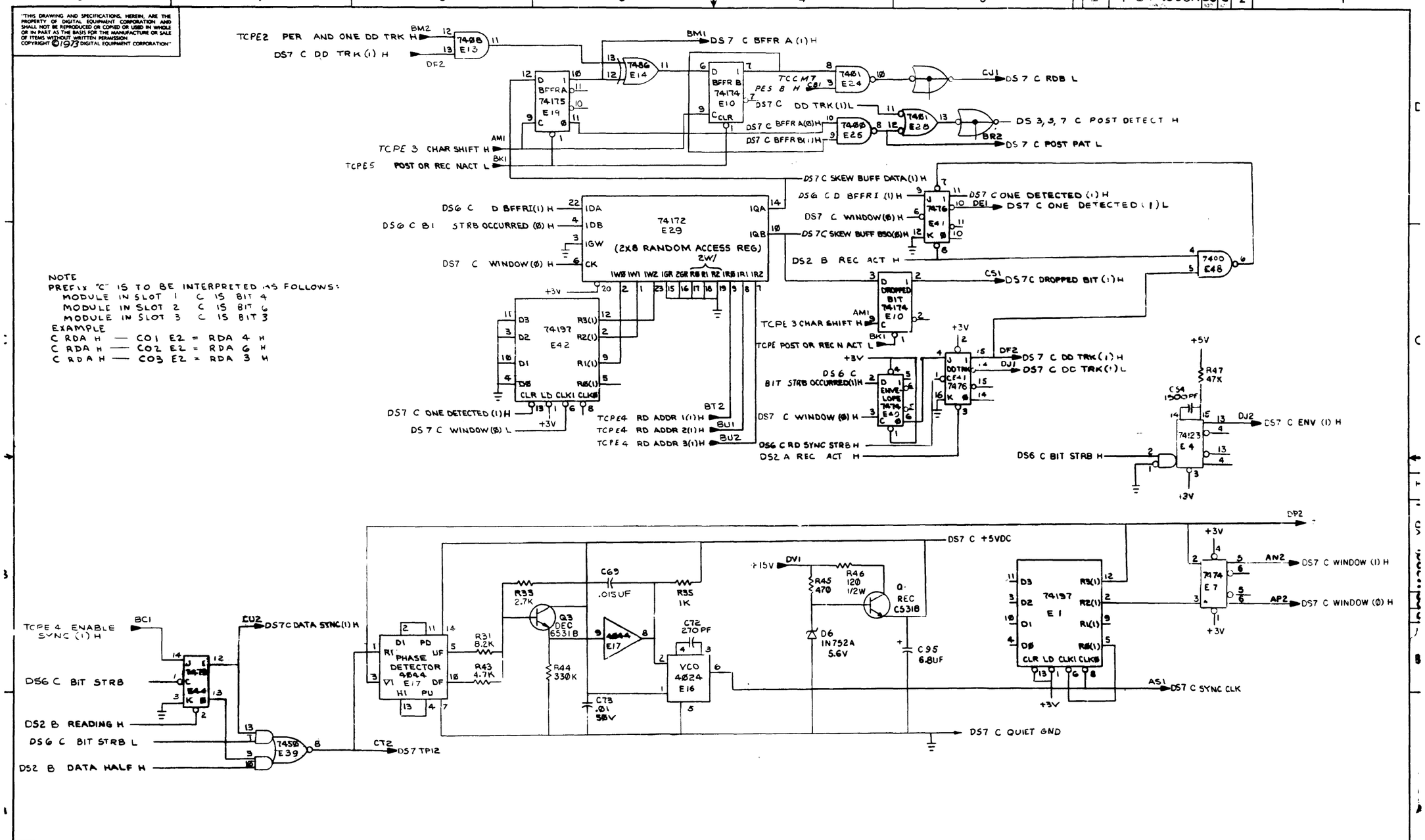

NOTE
PREFIX "C" IS TO BE INTERPRETED AS FOLLOWS:
MODULE IN SLOT 1 C IS BIT 4
MODULE IN SLOT 2 C IS BIT 6
MODULE IN SLOT 3 C IS BIT 3
EXAMPLE
C RDA H — CO1 E2 = RDA 4 H
C RDA H — CO2 E2 = RDA 6 H
C RDA H — CO3 E2 = RDA 3 H

REVISIONS		
CHK	CHANGE NO	REV

TITLE	SIZE	CODE	NUMBER	REV.
DATA SYNC (DS 7)	D	CS	M8901-YB-1	J
SCALE	SHEET 7 OF 7	DIST		

"THIS DRAWING AND SPECIFICATIONS, HEREIN, ARE THE PROPERTY OF DIGITAL EQUIPMENT CORPORATION AND SHALL NOT BE REPRODUCED OR COPIED OR USED IN WHOLE OR IN PART AS THE BASIS FOR THE MANUFACTURE OR SALE OF ITEMS WITHOUT WRITTEN PERMISSION.
COPYRIGHT © 1976 DIGITAL EQUIPMENT CORPORATION"

NOTES: 1. W1, W2, W5 & W6 ARE OPTIONAL JUMPERS.

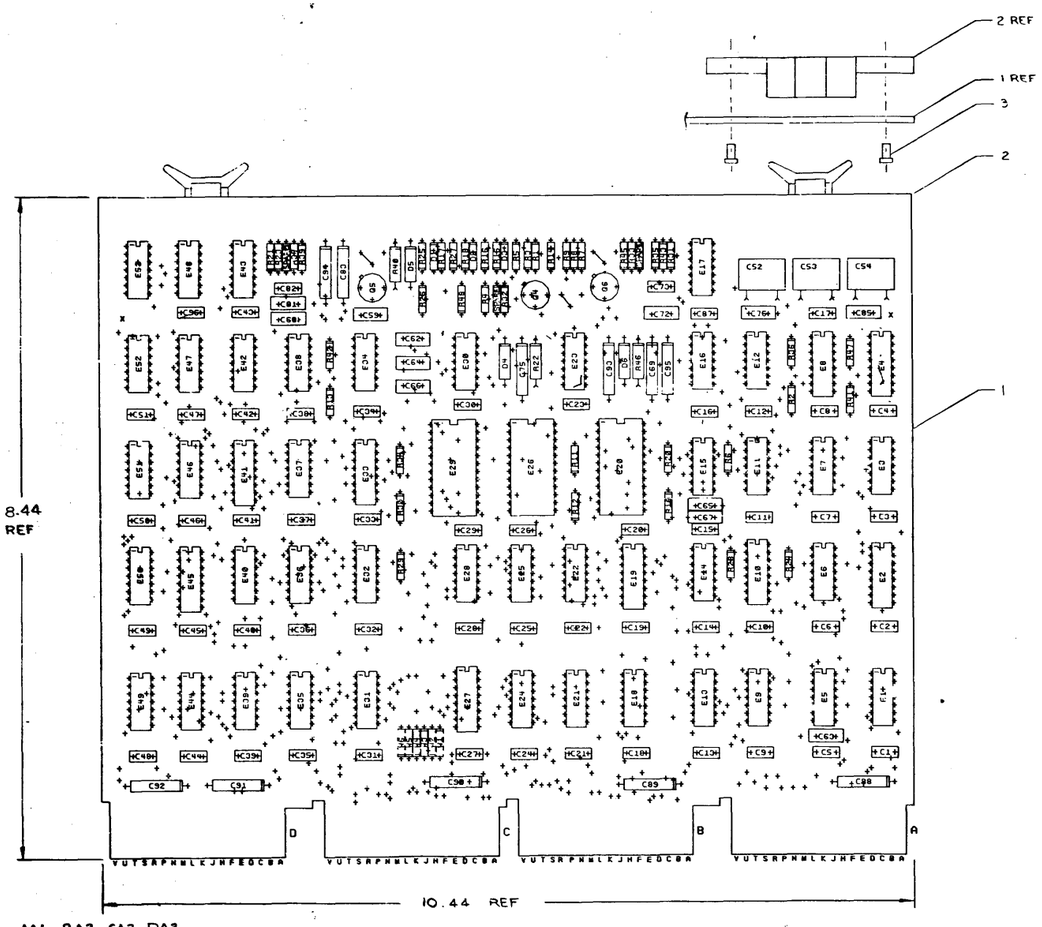

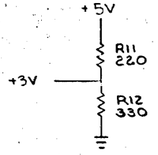

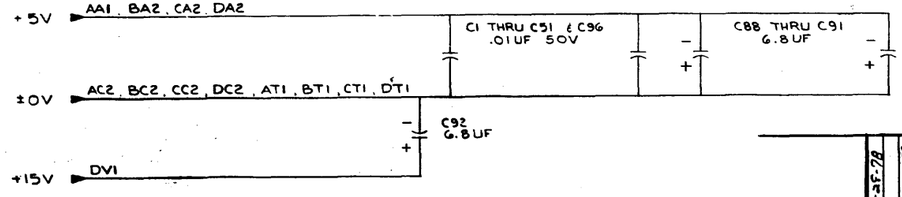

74172	12	24
4024	9	13
74174	8	16
74175	8	16
74193	8	16
7493	11	4
7476	13	5
IC TYPE	GND	+5V

GND AND 5V ARE USUALLY PIN 7 AND 14 RESPECTIVELY EXCEPTIONS ARE STATED ABOVE

IC PIN LOCATIONS

QTY	REF. DESIGNATION	DESCRIPTION	PART NO.	ITEM NO.
				50
				49
A/R		WIRE, 30 AWG (GRN)	91-05740-55	48
2	W3, W4	JUMPER INSULATED	90-9185	47
3	E13, 51, 53	IC 7408	1910155	46
3	E20, 26, 29	IC 74172	1911293	45
3	E17, 23, 43	IC 4044	1911039	44
2	E16, 38	IC 4024	1911038	43
1	E10	IC 74174	1910652	42
1	E19	IC 74175	1910651	41
3	R2, 19, 29	RES 360Ω 1/4W 5%	1301890	40
6	E1, 3, 12, 34, 42, 47	IC 74197	1910035	39
3	E2, 27, 45	IC 74193	1910018	38
2	E14, 31	IC 7486	1910011	37
2	E4, 8	IC 74123	1910436	36
2	E5, 15	IC 7416	1909928	35
1	E30	IC 8242	1909712	34
2	E22, 50	IC 7404	1909686	33
4	E9, 24, 28, 35	IC 7401	1905590	32
4	E18, 36, 44, 49	IC 7473	1905587	31
2	E33, 41	IC 7476	1905585	30
2	E21, 39	IC 7450	1905580	29
2	E25, 48	IC 7400	1905575	28
8	E6, 7, 11, 32, 37, 40, 46, 52	IC 7474	1905547	27
3	R8, R37, R43	RES, 4.7K, 1/4W, 5%	1300447	26
3	R7, R21, R31	RES, 3K, 1/4W, 5%	1700432	25
~~3~~	~~R10, R38, R44~~	~~RES 330K 1/4W 5%~~	~~1300~~	~~24~~
3	R22, R40, R46	RES 120 1/2W 5%	1300243	23
3	R36, R41, R47	RES 47K 1/4W 5%	1302177	22
3	R9, R23, R33	RES 2.7K 1/4W 5%	1300426	21
4	R6, R20, R30, R48	RES 1K 1/4W 5%	1300365	20
3	R32, R39, R45	RES 470 1/4W 5%	1300316	19
3	R1, R17, R27	RES 390 1/4W 5%	1300309	18
1	R12	RES 330 1/4W 5%	1300295	17
7	R3, R11, R16, R26, R14, R42, R35	RES 220 1/4W 5%	1300271	16
9	R4, R5, R13, R15, R18, R24, R25, R28, R34	RES 100 1/2W 5%	1300229	15
3	D4, D5, D6	DIODE 1N752A 5.6V 5% ZENER	112808	14
3	D1, D2, D3	DIODE DG64	1100114	13
3	C72, C76, C81	CAP 150 PF 100V 5% D.M.	1000019	12
3	C52, C53, C54	CAP 820 PF 100V 5%	10000E7	11
8	C88 THRU C95	CAP 6.8UF 35V 10%	1005306	10
55	C1 THRU C51, C73, C82 C87, C96	CAP .01UF 50V	1001610	9
3	C69, C75, C83	CAP .015UF 100V 10% MYLAR	1002630	8
3	C62, C64, C66	CAP 1000 PF 100V D.M.	1000042	7
3	C59, C60, C85	CAP 470 PF D.M.	1000024	6
3	Q4, Q5, Q6	TRANSISTOR DEC G5311 B	1509338	5
3	C63 C65, C67	CAP 22.0 PF 100V D.M.	1000021	4
8		EYELET	9006732	3
4		HANDLE, FLIP-CHIP (MAGENTA)	9008337-G	2
1		ETCHED CIRCUIT BOARD	5010467	1
REF		MODULE ECO HISTORY	B-MH-M8901-YB-6	REF
REF		ASSY/DRILLING HOLE LAYOUT	D-AH-M8901-YB-5	REF
REF		X-Y COORDINATE HOLE LOCATION	K-CO-M8901-YB-4	REF

PARTS LIST

FIRST USED ON OPTION MODEL

ETCH BOARD REV. E

DEC NO.	EIA NO.	DEC NO.	EIA NO.

SEMICONDUCTOR CONVERSION CHART

REV.	CHANGE NO.	DRAWN	CHK	REVISED
J	M8901-00010	REV & R.		3-APR-78
K	M8901-YC-00002	D. Tavares		6 MAR 78

digital

TITLE: DATA SYNC (DSI)

NEXT HIGHER ASSY

SIZE D | CODE CS | NUMBER M8901-YC-1 | REV K

SCALE | SHEET 1 OF 7

"THIS DRAWING AND SPECIFICATIONS, HEREIN, ARE THE PROPERTY OF DIGITAL EQUIPMENT CORPORATION AND SHALL NOT BE REPRODUCED OR COPIED OR USED IN WHOLE OR IN PART AS THE BASIS FOR THE MANUFACTURE OR SALE OF ITEMS WITHOUT WRITTEN PERMISSION.
COPYRIGHT ©1974 · DIGITAL EQUIPMENT CORPORATION"

BIT STROBE AND WINDOW

TCCM6 A RDA H
DS2 B REV L
7486 E31
CM1
8242 E30
+5V
R1 39Ø
R5 1ØØ
7416 E15
R3 22Ø
R4 1ØØ
C64 1ØØØPF
C67 22Ø PF
D3 DGG4
+5V
R2 56Ø
+3V
7474 E37
DS2 A D BFFR I (1) H
CD2
DS2 A D BFFR I (Ø) H

DS3 A DD TRK (1) L
DS2 A REC ACT H
E53 7408

TCPE 5 ANY TRANS L
CS2
74Ø1 E35
+3V
7473 E36
CV2
DS2 A BIT STRB OCCURRED (1) H
DS2 A BIT STRB OCCURRED (Ø) H

TCPE 5 RECORD ACTIVE L
BP2
7416 E15
+5V
R6 1K
7416 E15
DS2 A BIT STRB OCCURRED (Ø) H
DS3 A WINDOW (1) H
CR1
74Ø1 E35
CM1
DS2 A BIT STRB H

DS2 A RD SYNC STRB L

DS2 A BIT STRB H
7404 E5Y
DS2 A BIT STRB L

TCPE 5 RECORD ACTIVE H
AN1
74Ø8 E13
DS2 A REC ACT H

TCCM 4 DATA HALF H
CP2
E14 7486
DS2 B DATA HALF H

(SEE NOTE 3)
TCPE 5 RECORD ACTIVE H
BK1
74Ø8 E51
DS2 B REC ACT H

MBI 5 REV L
CF2
7486 E31
DS2 B REV L

TCCM 3 READING H
BJ2
E30 8242
+5V
R48 1K
DS2 B READING H

	SLOT 1	SLOT 2	SLOT 3
X	*SINGLE DD TRK H		INC COND H
Y(1) H	CER 1 (H)		INC DATA(1) H

USE X, Y, CHART TO DETERMINE INPUTS & OUTPUTS OF 74175 FLOP.

X
BE1
74175 E19
BD1
DS2 X(1) H
TCPE 3 CHAR SHIFT H
AM1
BD2
DS2 Y(0) H
TCPE 5 POST OR REC NACT L
BK1

DS2 A SKBFFR II H
7404 E22
DS2 A SKBFFR I H
7450 E21
BF2
DS2 A SET CORR SKEW L
DS4B SKBFFR I H
DS4 B SKBFFR II H
7404 E22
DS6 C SKBFFR I H
DS6 C SKBFFR II H
7404 E56
7400 E25
AB2
DS2 B SET CORR SKEW L

7416 E5
AM2
DS2 BIT READY H
AJ2
DS2 A BIT RDY L
7404 E22
+3V
74193 E27
CRY BRW
R3(1)
R2(1)
R1(1)
RØ(1)
DS2 A SKBFFR II H
DS2 A SKBFFR I H
CLR LD CUP CND
74Ø1 E35
CA1
DS2 OVERFLOW L
DS3 A ONE DETECTED (1) L
BV2
DS3 A DD TRK (1) L
CP1
DS3 A WINDOW (Ø) H
CC1
DS3 A SYNC CLK
AP1
74Ø8 E51
74Ø4 E5Ø
DS2 A RD SYNC STRB L
DS2 A RD SYNC STRB H
+3V
CH SHFT HOLD 7474 E52
TCPE 3 CHAR SHIFT H
AM1
RD SYNC 7474 E52
DS2 A RD SYNC (Ø) H
R13 1ØØ
C6Ø 47Ø pf

NOTE:
1. PREFIX "A" IS TO BE INTERPRETED AS FOLLOWS:
   MODULE IN SLOT 1 — A IS BIT 2
   MODULE IN SLOT 2 — A IS BIT P
   MODULE IN SLOT 3 — A IS BIT 7
   EXAMPLE:
   A RDA H — CO1 N1 = RDA 2 H
   A RDA H — CO2 N1 = RDA P H
   A RDA H — CO3 N1 = RDA 7 H
2. M8901 MODULES ARE LOCATED IN SECTIONS C D E F OF TM02 LOGIC. THEREFORE PINS IN SECTION A OF THE MODULE ARE LOCATED IN C ON THE BACKPLANE ETC.
3. PIN BK1 IS "TCPE 5 POST OR REC NACT L" ON ALL M8901S WHEN IN TM02.

REVISIONS		
CHK	CHANGE NO	REV

TITLE	SIZE	CODE	NUMBER	REV.
DATA SYNC (DS2)	D	CS	M8901-YC-1	K
SCALE	SHEET 2 OF 7	DIST.		

DEC 40004 MD 3000 120

DCS M8901-YC-1 K

"THIS DRAWING AND SPECIFICATIONS, HEREIN, ARE THE PROPERTY OF DIGITAL EQUIPMENT CORPORATION AND SHALL NOT BE REPRODUCED OR COPIED OR USED IN WHOLE OR IN PART AS THE BASIS FOR THE MANUFACTURE OR SALE OF ITEMS WITHOUT WRITTEN PERMISSION.
COPYRIGHT ©1974, DIGITAL EQUIPMENT CORPORATION"

NOTE
1. PREFIX "A" IS TO BE INTERPRETED AS FOLLOWS.
   MODULE IN SLOT 1 — A IS BIT 2
   MODULE IN SLOT 2 — A IS BIT P
   MODULE IN SLOT 3 — A IS BIT 7
   EXAMPLE
   A RDA H — CO1 N1 = RDA 2 H
   A RDA H — CO2 N1 = RDA P H
   A RDA H — CO3 N1 = RDA 7 H
2. M8901 MODULES ARE LOCATED IN SECTIONS C,D,E,F OF TM02 LOGIC. THEREFORE PINS IN SECTION A OF THE MODULE ARE LOCATED IN C ON THE BACKPLANE ETC.

TCPE2 PERR AND ONE DD TRK H
DS3 A DD TRK (1) H
BM2
CR2
7408 E13
BL2
DS3 A BFFR A (1) H
7486 E14
BFFRA 74175 E19
BFFRB 74174 E10
TCPE3 CHAR SHIFT H
TCPE5 POST OR REC NACT L
AM1
BK1
TCPE 2
TCCM 7 PES B H
CB1
7401 E24
CH1
DS3 A RDB L
DS3 A DD TRK (1) L
DS3 A BFFRA (0) H
DS3 A BFFRB (1) H
7400 E25
7401 E35
AS2
DS3, 5, 7, POST DETECT H
BS1
DS3 A POST PAT L
DS3 A SKEW BUFF DATA (1) H
DS2 A D BFFR I (1) H
DS2 A BIT STRB OCCURRED (0) H
DS3 A WINDOW (0) H
CC1
74172 E26
(2X8 RANDOM ACCESS REG)
DS2 A ONE DETECTED (1) H
DS3 A ONE DETECTED (1) H
DS3 A SKEW BUFF BSC (0) H
7476 E33
DS2 B REC ACT H
7400 E48
DROPPED BIT 74174 E10
BU1
DS3 A DROPPED BIT (1) H
TCPE 3 CHAR SHIFT H
TCPE5 POST OR REC N ACT L
+3V
74197 E34
DS3 A ONE DETECTED (1) H
DS3 A WINDOW (1) H
CR1
BT2
BU1
BU2
TCPE4 RD ADDR 1 (1) H
TCPE4 RD ADDR 2 (1) H
TCPE4 RD ADDR 3 (1) H
DS2 A RD SYNC STRB H
DS2 A REC ACT H
DS2 A BIT STRB OCCURRED (1) H
CV2
ENVELOPE 74179 E37
DS3 A WINDOW (0) H
CC1
DD TRK 74175 E49
CR2
CP1
DS3 A DD TRK (1) H
DS3 A DD TRK (1) L
+5V
R36 47K
DS2 A BIT STRB H
74123 E45
BK2
DS3 A ENV (1) H
+3V

TCPE 4 ENABLE SYNC (1) H
BC1
7473 E49
CV1
DS3 A DATA SYNC (1) H
DS2 A BIT STRB H
DS2 B READING H
DS3 ADD TRK (1) L
7408 E53
DS2 A BIT STRB L
DS2 B DATA HALF H
7450 E39
CU1
DS3 TP2
DS3 A +5VDC
PHASE DETECTOR 4044 E23
R1
PD
UP
DF
FU
V1
R9 2.7K
R7 3K
R8 4.7K
C75 .015uF
C87 .01 50V
4044 E23
R14 220Ω
VCO 4024 E16
C76 150 PF
+15V
DV1
R32 470
R22 120 1/2W
Q4 DEC 6531B
D4 IN752A 5.6V
C93 6.8UF
DS3 A QUIET GND
74197 E47
CLR LD CLK1 CLK0
+3V
AP1
DSC A SYNC CLK
BV1
DS 3 TP3
7474 E32
CR1
DS3 A WINDOW (1) H
CC1
DS3 A WINDOW (0) H

REVISIONS		
CHK	CHANGE NO.	REV.

TITLE	SIZE	CODE	NUMBER	REV.
DATA SYNC (DS3)	D	CS	M8901-YC-1	K
SCALE	SHEET 3 OF 7	DIST.		

DCS M8901-YC-1 K

"THIS DRAWING AND SPECIFICATIONS, HEREIN, ARE THE PROPERTY OF DIGITAL EQUIPMENT CORPORATION AND SHALL NOT BE REPRODUCED OR COPIED OR USED IN WHOLE OR IN PART AS THE BASIS FOR THE MANUFACTURE OR SALE OF ITEMS WITHOUT WRITTEN PERMISSION.
COPYRIGHT © 1976, DIGITAL EQUIPMENT CORPORATION"

BIT STROBE AND WINDOW

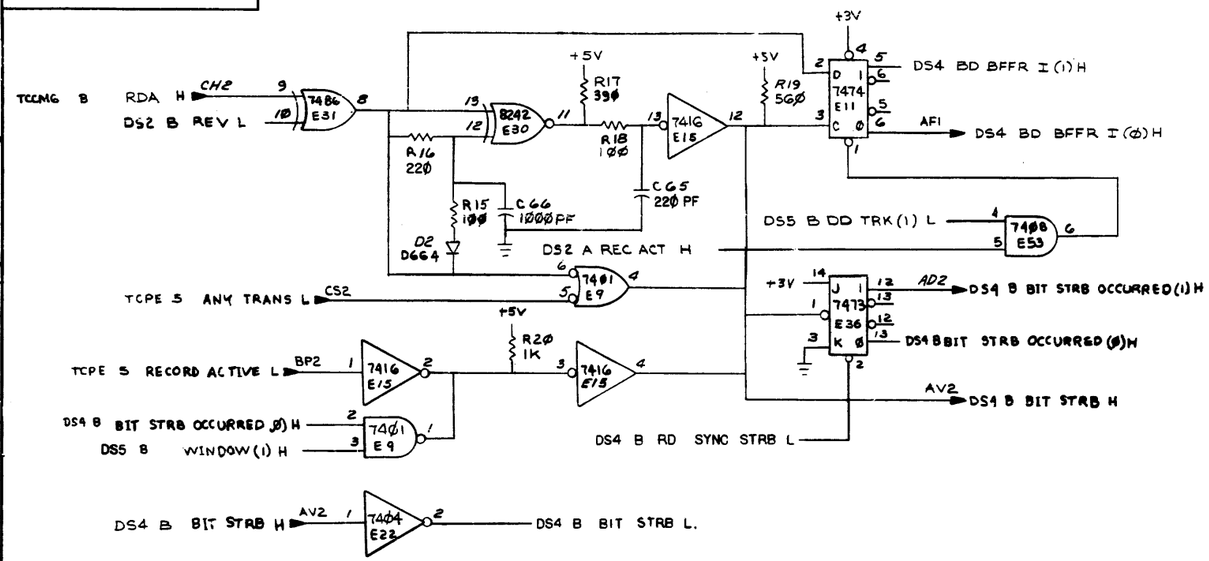

NOTE.
JUMPERS "W1" THRU W6 INDICATE THE TAPE SPEED THE MODULE IS BUILT FOR. CHANGING THE JUMPERS DOES NOT CHANGE THE SPEED CAPABILITY OF THE MODULE.

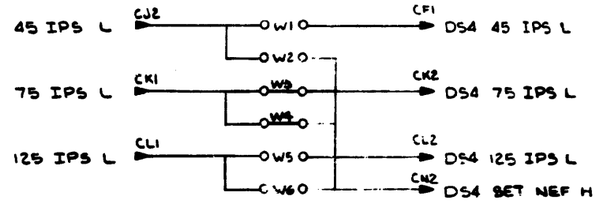

NOTE
1. PREFIX "B" IS TO BE INTERPRETED AS FOLLOWS:
   MODULE IN SLOT 1 B IS BIT Ø
   MODULE IN SLOT 2 B IS BIT 5
   MODULE IN SLOT 3 B IS BIT 1
   EXAMPLE:
   B RDA H — CO1 CH2 = RDA Ø H
   B RDA H — CO2 CH2 = RDA 5 H
   B RDA H — CO3 CH2 = RDA 1 H

2. M8901 MODULES ARE LOCATED IN SECTIONS CDEF OF TMØ2 LOGIC. THEREFORE PINS IN SECTION A OF THE MODULE ARE LOCATED IN C ON THE BACKPLANE ETC.

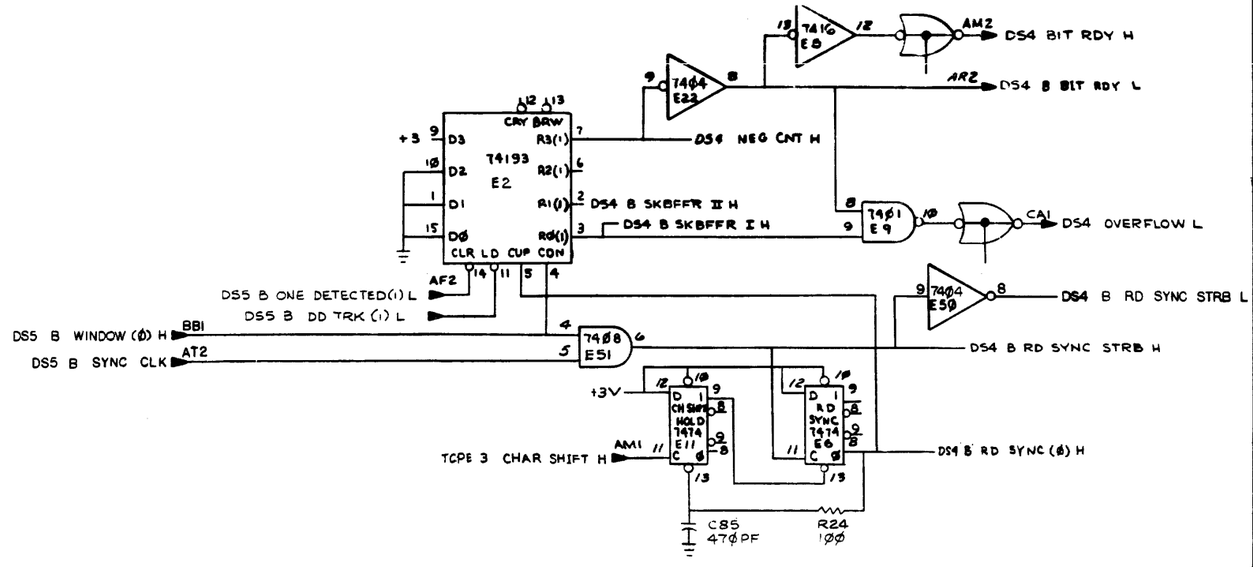

REVISIONS		
CHK	CHANGE NO.	REV.

TITLE	SIZE	CODE	NUMBER	REV.
DATA SYNC (DS4)	D	CS	M8901-YC-1	K
SCALE	SHEET 4 OF 7	DIST.		

"THIS DRAWING AND SPECIFICATIONS, HEREIN, ARE THE PROPERTY OF DIGITAL EQUIPMENT CORPORATION AND SHALL NOT BE REPRODUCED OR COPIED OR USED IN WHOLE OR IN PART AS THE BASIS FOR THE MANUFACTURE OR SALE OF ITEMS WITHOUT WRITTEN PERMISSION.
COPYRIGHT © 1973, DIGITAL EQUIPMENT CORPORATION"

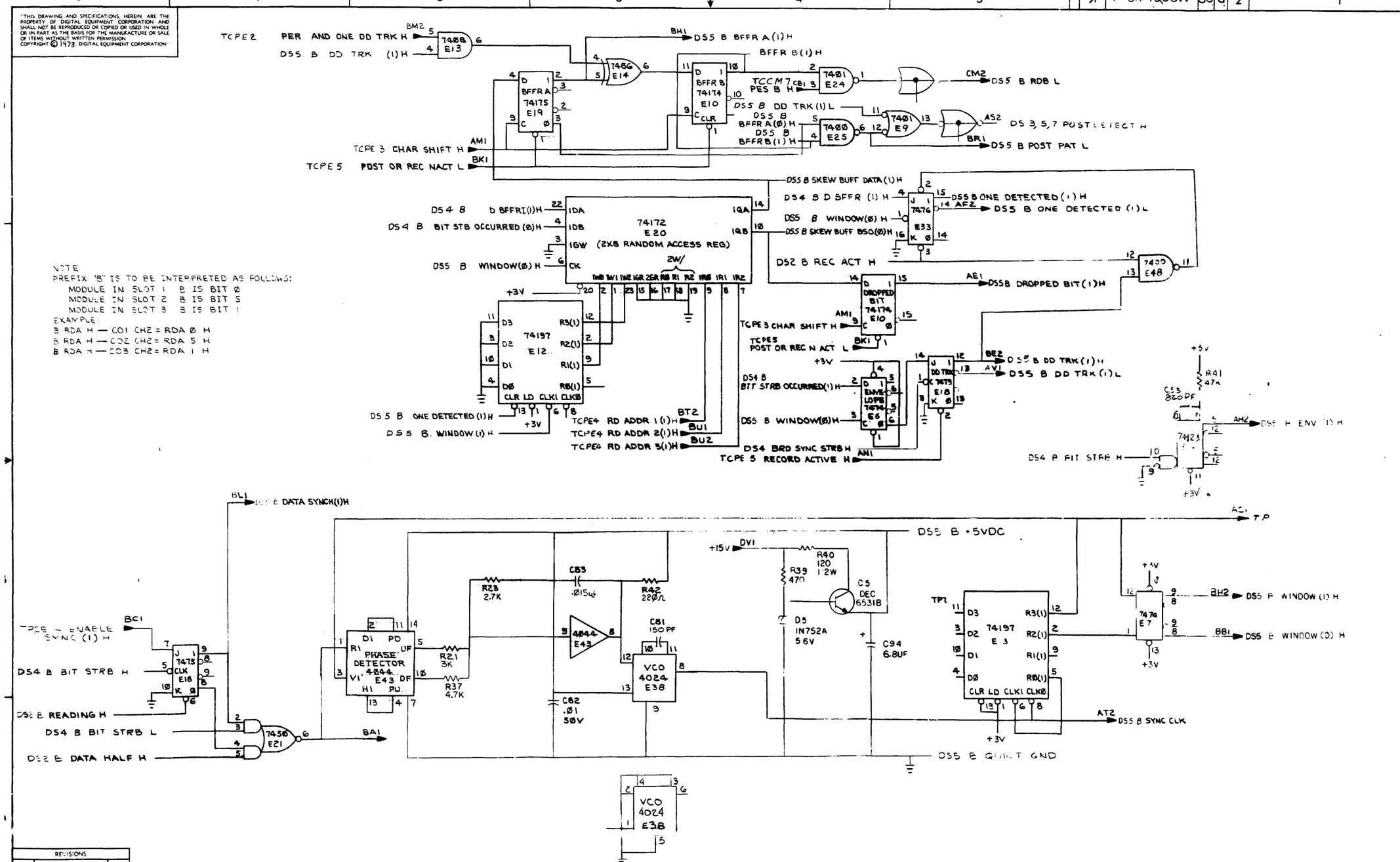

NOTE
PREFIX "B" IS TO BE INTERPRETED AS FOLLOWS:
MODULE IN SLOT 1 B IS BIT Ø
MODULE IN SLOT 2 B IS BIT 5
MODULE IN SLOT 3 B IS BIT 1
EXAMPLE:
B RDA H — CO1 CH2 = RDA Ø H
B RDA H — CO2 CH2 = RDA 5 H
B RDA H — CO3 CH2 = RDA 1 H

REVISIONS		
CHK	CHANGE NO	REV

TITLE	SIZE	CODE	NUMBER	REV.
DATA SYNC (DS5)	D	CS	M8901-YC-1	K
SCALE	SHEET 5 OF 7	DIST		

"THIS DRAWING AND SPECIFICATIONS, HERLIN, ARE THE PROPERTY OF DIGITAL EQUIPMENT CORPORATION AND SHALL NOT BE REPRODUCED OR COPIED OR USED IN WHOLE OR IN PART AS THE BASIS FOR THE MANUFACTURE OR SALE OF ITEMS WITHOUT WRITTEN PERMISSION.
COPYRIGHT © 1975 DIGITAL EQUIPMENT CORPORATION"

BIT STROBE AND WINDOW

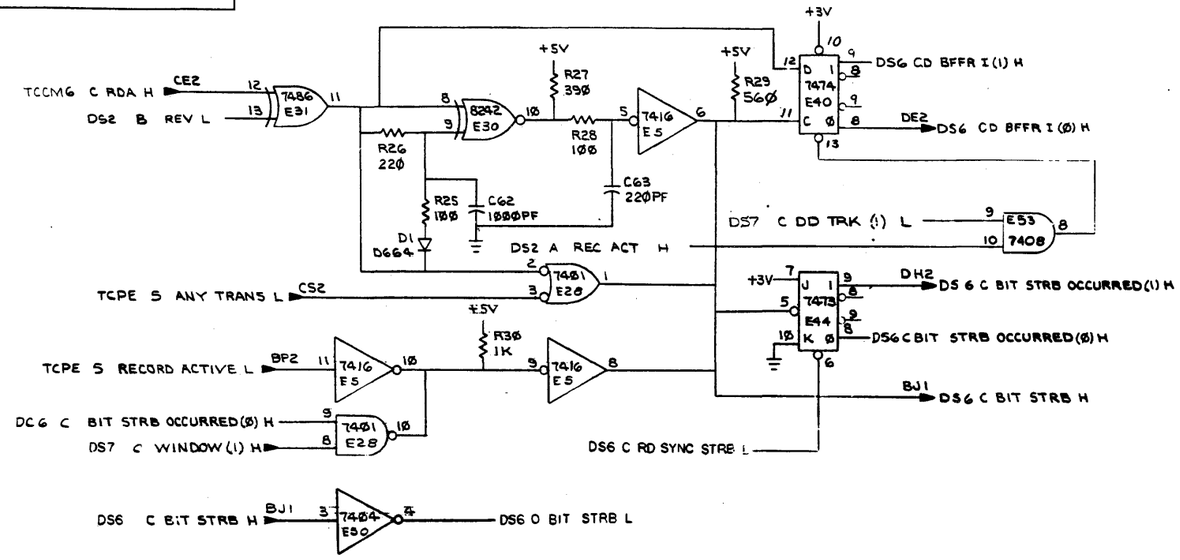

NOTE
PREFIX 'C' IS TO BE INTERPRETED AS FOLLOWS:
MODULE IN SLOT 1 C IS BIT 4
MODULE IN SLOT 2 C IS BIT 6
MODULE IN SLOT 3 C IS BIT 3
EXAMPLE:
C RDA H — CO1 E2 = RDA 4 H
C RDA H — CO2 E2 = RDA 6 H
C RDA H — CO3 E2 = RDA 3 H

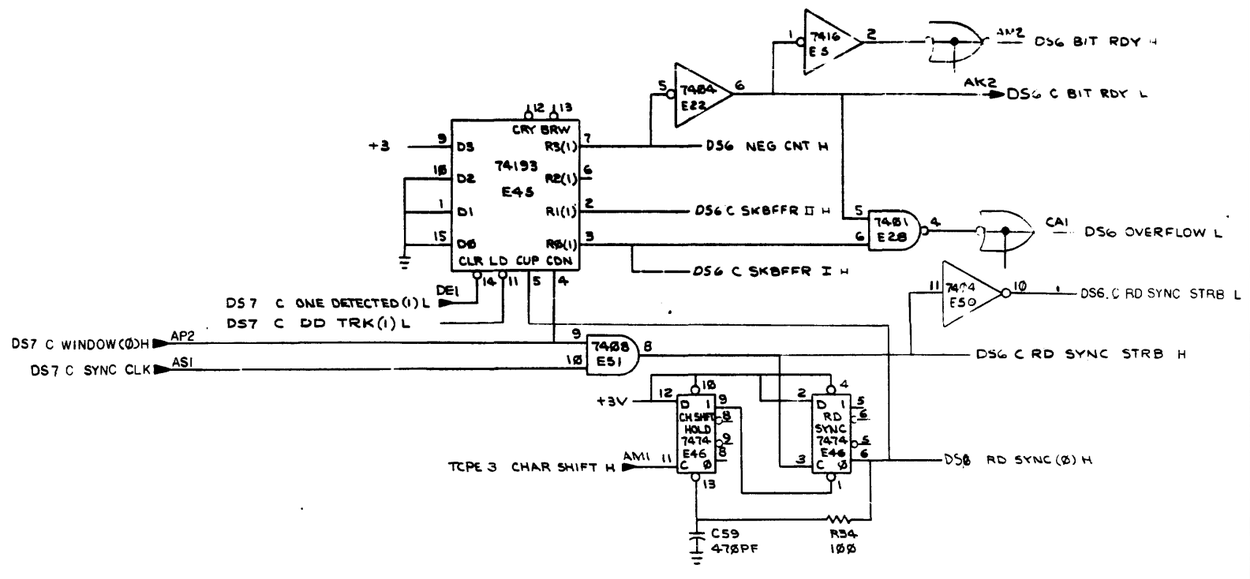

REVISIONS		
CHK	CHANGE NO	REV

TITLE	SIZE	CODE	NUMBER	REV.
DATA SYNC (DS6)	D	CS	M8901-YC-1	K
SCALE — SHEET 6 OF 7	DIST.			

"THIS DRAWING AND SPECIFICATIONS HEREIN ARE THE PROPERTY OF DIGITAL EQUIPMENT CORPORATION AND SHALL NOT BE REPRODUCED OR COPIED OR USED IN WHOLE OR IN PART AS THE BASIS FOR THE MANUFACTURE OR SALE OF ITEMS WITHOUT WRITTEN PERMISSION
COPYRIGHT © 1973 DIGITAL EQUIPMENT CORPORATION

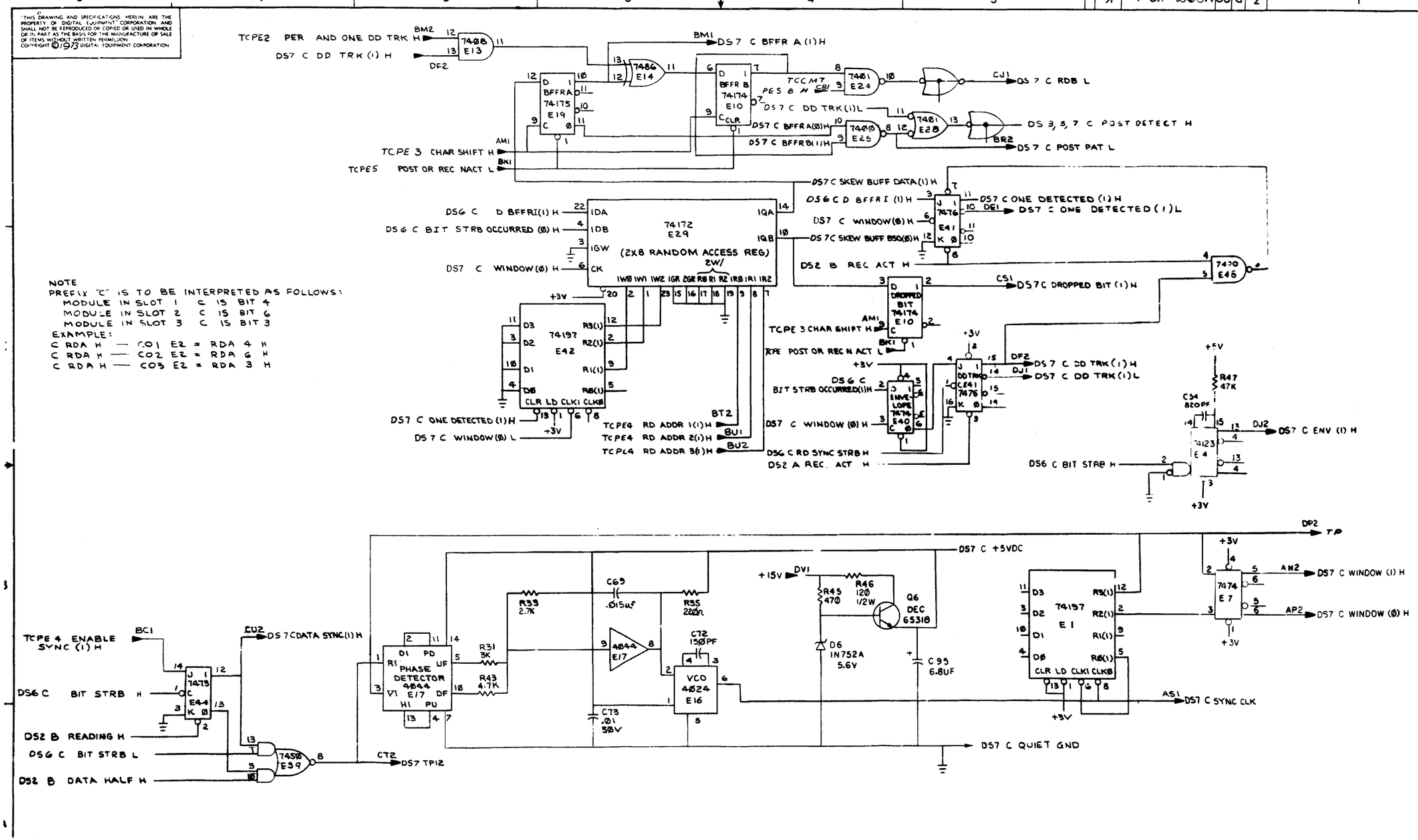

NOTE
PREFIX "C" IS TO BE INTERPRETED AS FOLLOWS:
MODULE IN SLOT 1 C IS BIT 4
MODULE IN SLOT 2 C IS BIT 6
MODULE IN SLOT 3 C IS BIT 3
EXAMPLE:
C RDA H — CO1 E2 = RDA 4 H
C RDA H — CO2 E2 = RDA 6 H
C RDA H — CO3 E2 = RDA 3 H

REVISIONS		
CHK	CHANGE NO	REV

TITLE	SIZE	CODE	NUMBER	REV
DATA SYNC (DS 7)	D	CS	M8901-YC-1	K
SCALE	SHEET 7 OF 7	DIST.		

"THIS DRAWING AND SPECIFICATIONS, HEREIN, ARE THE PROPERTY OF DIGITAL EQUIPMENT CORPORATION AND SHALL NOT BE REPRODUCED OR COPIED OR USED IN WHOLE OR IN PART AS THE BASIS FOR THE MANUFACTURE OR SALE OF ITEMS WITHOUT WRITTEN PERMISSION.
COPYRIGHT © 1976 DIGITAL EQUIPMENT CORPORATION"

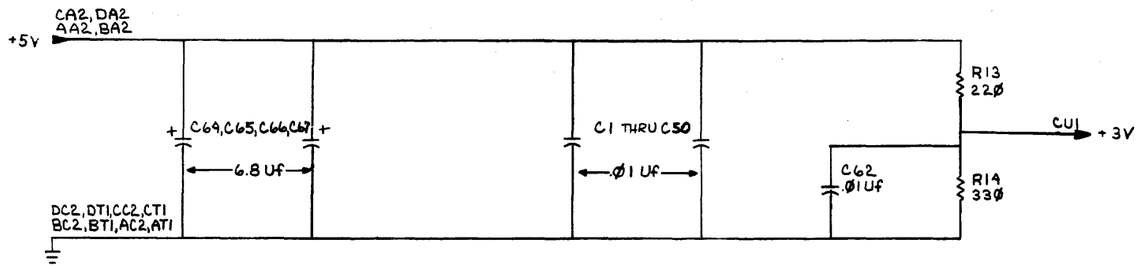

DRN. G HOBBS	22 Oct 76	FIRST USED ON TMØ3	digital
CHK'D	Nov 1 76	TITLE TAPE CONTROL PHASE ENCODED (TCPE1)	
ENG.	1-24-77		
PROJ. ENG.	1-24-77		
PROD.	24 Jan 77		
NEXT HIGHER ASSY.			
B-DD-M8932-Ø-Ø		SIZE D CODE CS NUMBER M8932-Ø-1	REV. B
SCALE			
SHEET 1 OF 5		DIST.	

REVISIONS		
CHK.	CHANGE NO.	REV.
9/4	M8932-00001	B
	J. VAGIAS	

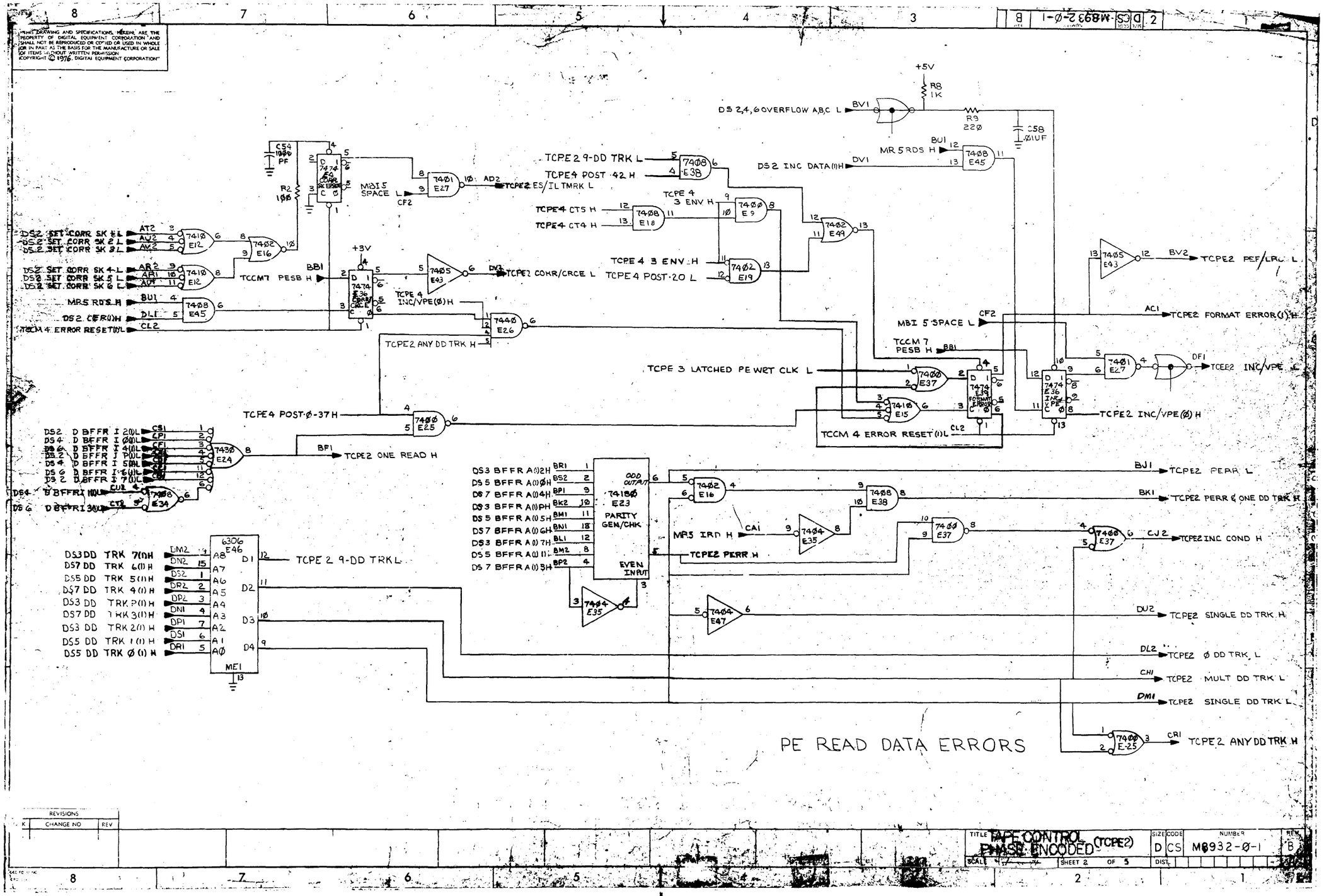

"THIS DRAWING AND SPECIFICATIONS, HEREIN, ARE THE PROPERTY OF DIGITAL EQUIPMENT CORPORATION AND SHALL NOT BE REPRODUCED OR COPIED OR USED IN WHOLE OR IN PART AS THE BASIS FOR THE MANUFACTURE OR SALE OF ITEMS WITHOUT WRITTEN PERMISSION. COPYRIGHT © 1976, DIGITAL EQUIPMENT CORPORATION"

REVISIONS		
CHANGE NO	REV	

TITLE	SIZE	CODE	NUMBER	REV
TAPE CONTROL PHASE ENCODED (TCPE2)	D	CS	M8932-Ø-1	B
SCALE	SHEET 2 OF 5		DIST.	

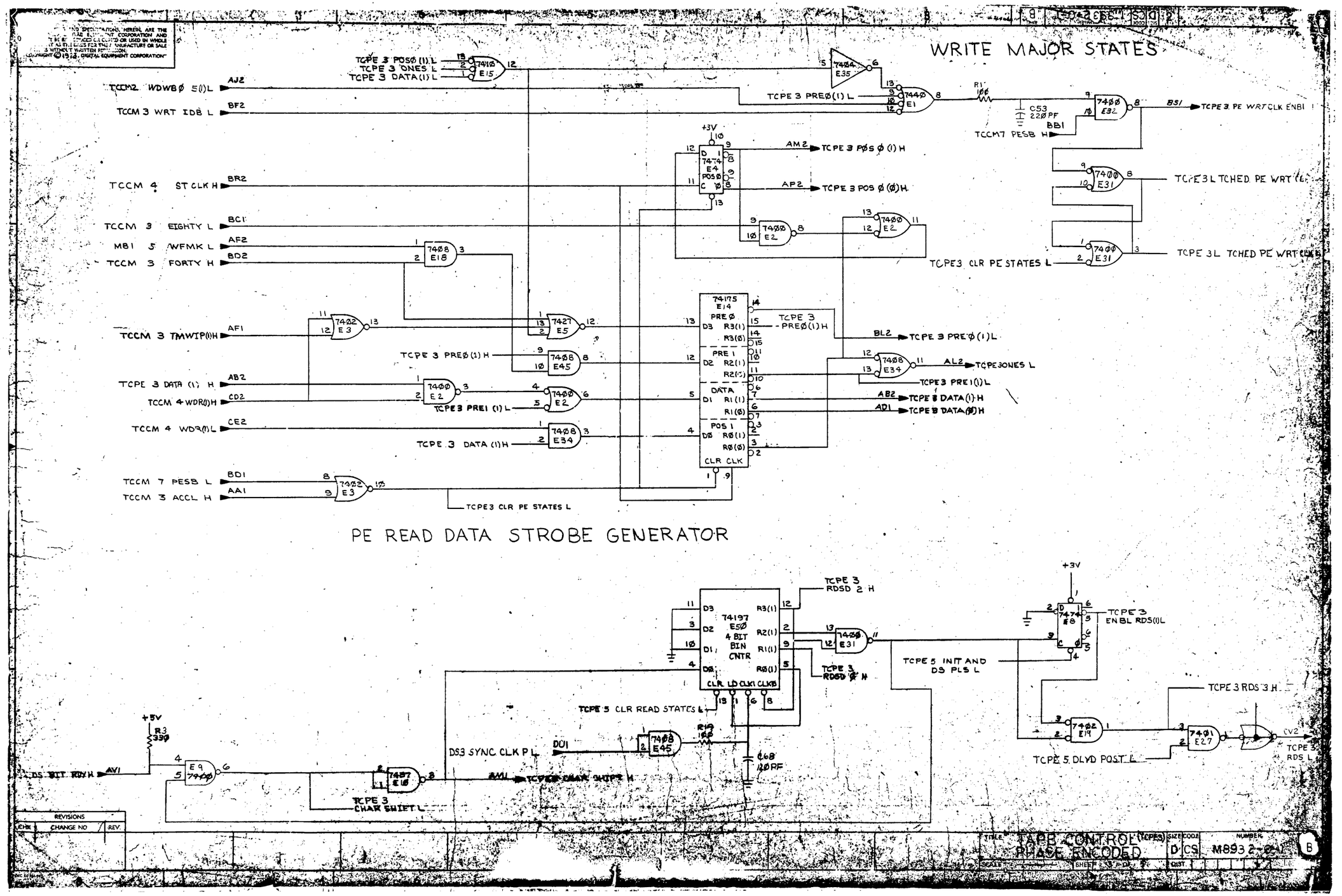
WRITE MAJOR STATES
PE READ DATA STROBE GENERATOR
TCPE 3 POSØ (1) L
TCPE 3 ONES L
TCPE 3 DATA (1) L
TCCM2 WDWBØ 5(1)L
TCCM 3 WRT IDB L
TCCM 4 ST CLK H
TCCM 3 EIGHTY L
MB1 5 WFMK L
TCCM 3 FORTY H
TCCM 3 TMWIP(1)H
TCPE 3 DATA (1) H
TCCM 4 WDR(1)H
TCCM 4 WDR(1)L
TCCM 7 PESB L
TCCM 3 ACCL H
TCPE 3 PREØ(1) L
TCPE 3 PE WRT CLK ENBL
TCCM7 PESB H
TCPE 3 POSØ (1) H
TCPE 3 POSØ (Ø) H
TCPE3 L TCHED PE WRT CLK
TCPE3 CLR PE STATES L
TCPE 3 PREØ(1) H
TCPE 3 PREØ(1) L
TCPE3ONES L
TCPE3 PRE1(1) L
TCPE 3 DATA (1) H
TCPE 3 DATA (Ø) H
TCPE 3 RDSD 2 H
TCPE 3 ENBL RDS(1)L
TCPE 5 INIT AND DS PLS L
TCPE 3 RDSD Ø H
TCPE 5 CLR READ STATES L
TCPE 3 RDS 3 H
TCPE 5 DLYD POST L
TCPE 3 RDS L
DS3 SYNC CLK P L
DS BIT RDY H
TCPE 3 CHAR SHIFT L
TCPE3 CHAR SHIFT H
REVISIONS
CHK
CHANGE NO
REV.
TAPE CONTROL (TCPE3)
PHASE ENCODED
SIZE
CODE
D
CS
NUMBER
M8932-0-1
B

THIS DRAWING AND SPECIFICATIONS, HEREIN, ARE THE PROPERTY OF DIGITAL EQUIPMENT CORPORATION AND SHALL NOT BE REPRODUCED OR COPIED OR USED IN WHOLE OR IN PART AS THE BASIS FOR THE MANUFACTURE OR SALE OF ITEMS WITHOUT WRITTEN PERMISSION.
COPYRIGHT ©1976 DIGITAL EQUIPMENT CORPORATION

DESKEW BUFFER READ ADDRESS COUNTER

IDB TIMER

+5V
R7 470 R5 470 R6 470 R11 470
6300 E20
TCPE4 CT Ø H
TCPE4 CT 1 H
TCPE4 CT 2 H
TCPE4 CT 3 H
TCPE4 CT 4 H
TCPE4 CT 5 H
TCPE4 CT 6 H
TCPE 5 DLYD POST L
ME1
C57 1500 pf C55 1500 pf C56 1500 pf C60 1500 pf
TCPE4 POST·Ø37 H
TCPE4 POST·2Ø L
TCPE4 POST·38 H
TCPE4 POST·42 H

BU2 → TCPE4 IDB H

+3V
74161 E6 4-BIT BIN CNTR
ENBCN RCRY D3 D2 D1 DØ R3(1) R2(1) R1(1) RØ(1) CLR LD CLK ENBCR
TCPE 5 INIT +DS PLS L
+3V

+3V
74161 E7 4-BIT BIN CNTR
ENBCN RCRY D3 D2 D1 DØ R3(1) R2(1) R1(1) RØ(1) CLR LD CLK ENBCR
AK2 → TCPE4 RD ADDR 3 H
AE2 → TCPE 4 RD ADDR 2 H
DT2 → TCPE4 RD ADDR 1 H
TCPE3 CHAR SHIFT L
TCPE5 RECORD ACTIVE H
AL1
+3V

+3V
7474 E8
TCPE 4 CT1 H
TCPE 4 CTØ H
TCPE 3 CLR PE STATES L
AE1 → TCPE 4 ENABLE SYNC H

6306 E13
DS3 ENV P (1) H
DS3 ENV 2 (1) H
DS3 ENV 7 (1) H
DS5 ENV Ø (1) H
DS5 ENV 5 (1) H
DS5 ENV 1 (1) H
DS7 ENV 6 (1) H
DS3 ENV 4 (1) H
DS7 ENV 3 (1) H
ME1

7402 E28
TCCM4 2ØØ BPI CLK H
TCCM 7 PESB L
CH2
7427 E16
BD1
TCPE4 ID PATTERN L

74197 E21 4 BIT BIN CNTR *
D3 D2 D1 DØ R3(1) R2(1) R1(1) RØ(1) CLR LD CLK1 CLKØ
TCPE4 CT2 H
TCPE4 CT1 H
TCPE4 CTØ H

TCPE 5 POST + PRE H
TCPE4 TMRK PATTERN H
TCPE 5 PETMRK(1) H
7427 E5
TCPE 5 RECORD ACTIVE L
7400 E9
7400 E9
BH1 → TCPE4 3 ENV H
7400 E31
TCPE 4 CT6 H
R18 100
C69 120PF
AK1 → TCPE4 ANY ENV H
TCCM 7 PESB H
BB1

74197 E22 4 BIT BIN CNTR *
TCPE4 CT5 H
TCPE4 CT4 H
TCPE4 CT3 H

DS5 ENV 5 (1) H
DS5 ENV 1 (1) H
DS5 ENV Ø (1) H
AH2 AJ1 AH1
7410 E12
7404 E35
7450 E30
7404 E47
DB2 → TCPE4 TMRK PATTERN H

TCCM 4 DATA HALF H
CP2
7408 E38
7402 E49
+5V
R17 1K
7405 E43
TCPE5 POST AMBLE (1) L
TCPE 3 RDS 3 H
7402 E49
7405 E43

DS 3 ENV 2 (1) H
DS 3 ENV 7 (1) H
DS 3 ENV P (1) H
BB2 BH2 BE1
7410 E15
7402 E19
TCPE 3 LATCHED PE WRT CLK H

REVISIONS		
CHK	CHANGE NO	REV.

TITLE	SIZE	CODE	NUMBER	REV
TAPE CONTROL (TCPE4) PHASE ENCODED	D	CS	M8932-Ø 1	B
SCALE	SHEET 4 OF 5	DIST		

"THIS DRAWING AND SPECIFICATIONS, HEREIN, ARE THE PROPERTY OF DIGITAL EQUIPMENT CORPORATION AND SHALL NOT BE REPRODUCED OR COPIED OR USED IN WHOLE OR IN PART AS THE BASIS FOR THE MANUFACTURE OR SALE OF ITEMS WITHOUT WRITTEN PERMISSION.
COPYRIGHT © 1975, DIGITAL EQUIPMENT CORPORATION"

READ MAJOR STATES

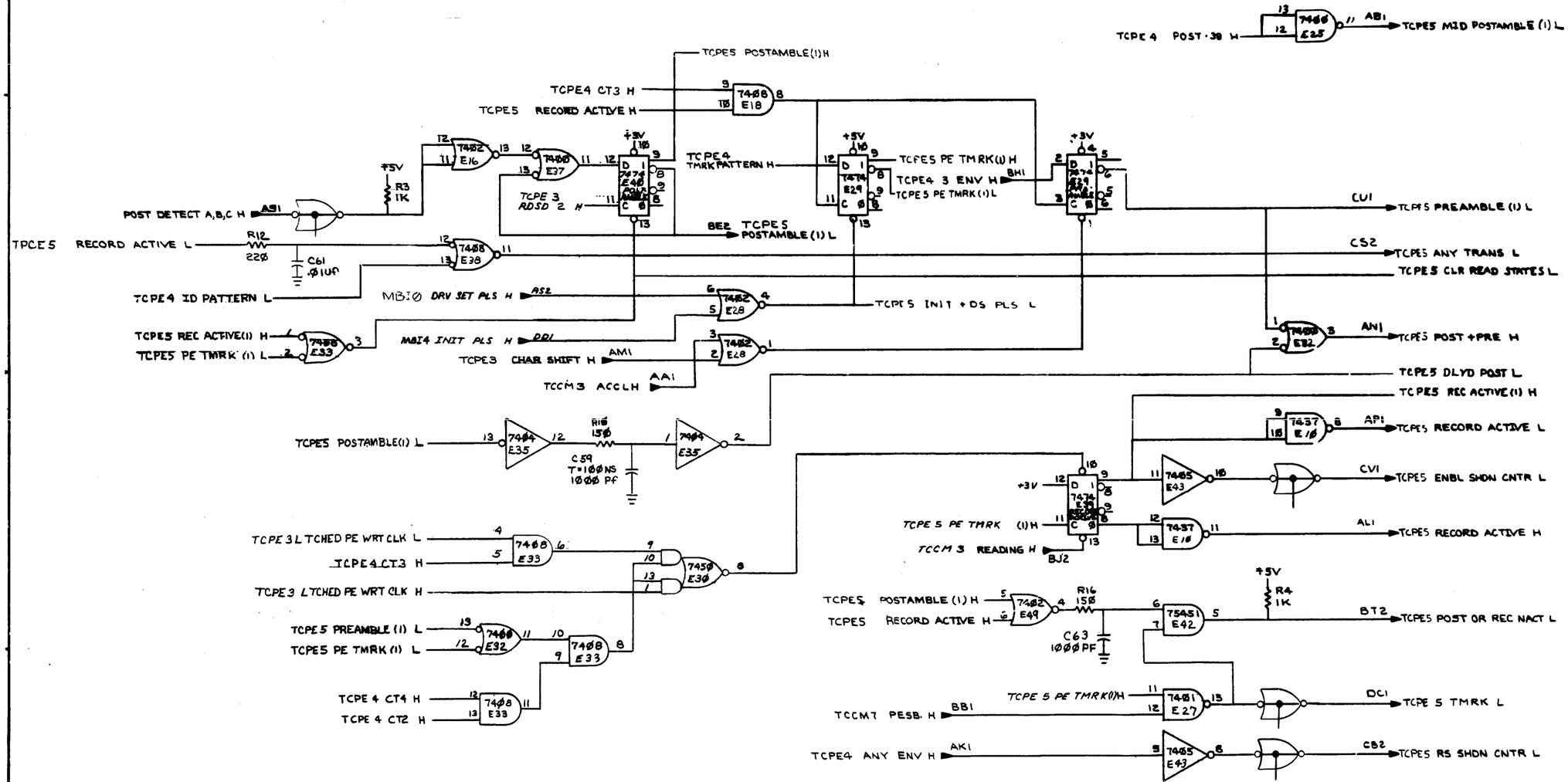

REVISIONS		
CHK	CHANGE NO.	REV.

TITLE	SIZE	CODE	NUMBER	REV.
TAPE CONTROL PHASE ENCODED (TCPE5)	D	CS	M8932-0-1	B
SCALE —	SHEET 5 OF 5	DIST.		

THIS DRAWING AND SPECIFICATIONS, HEREIN, ARE THE PROPERTY OF DIGITAL EQUIPMENT CORPORATION AND SHALL NOT BE REPRODUCED OR COPIED OR USED IN WHOLE OR IN PART AS THE BASIS FOR THE MANUFACTURE OR SALE OF ITEMS WITHOUT WRITTEN PERMISSION.
COPYRIGHT © 1976 DIGITAL EQUIPMENT CORPORATION

REWORK INSTRUCTIONS
ECO #1
ETCH CUTS SIDE 2:
1-1. AT E22-2
WIRE ADDS SIDE 1:
1-2. FROM E22-2 TO E33-12
1-3. FROM E21-12 TO E33-13
1-4. FROM E33-11 TO E33-9

COMPONENT SIDE VIEW

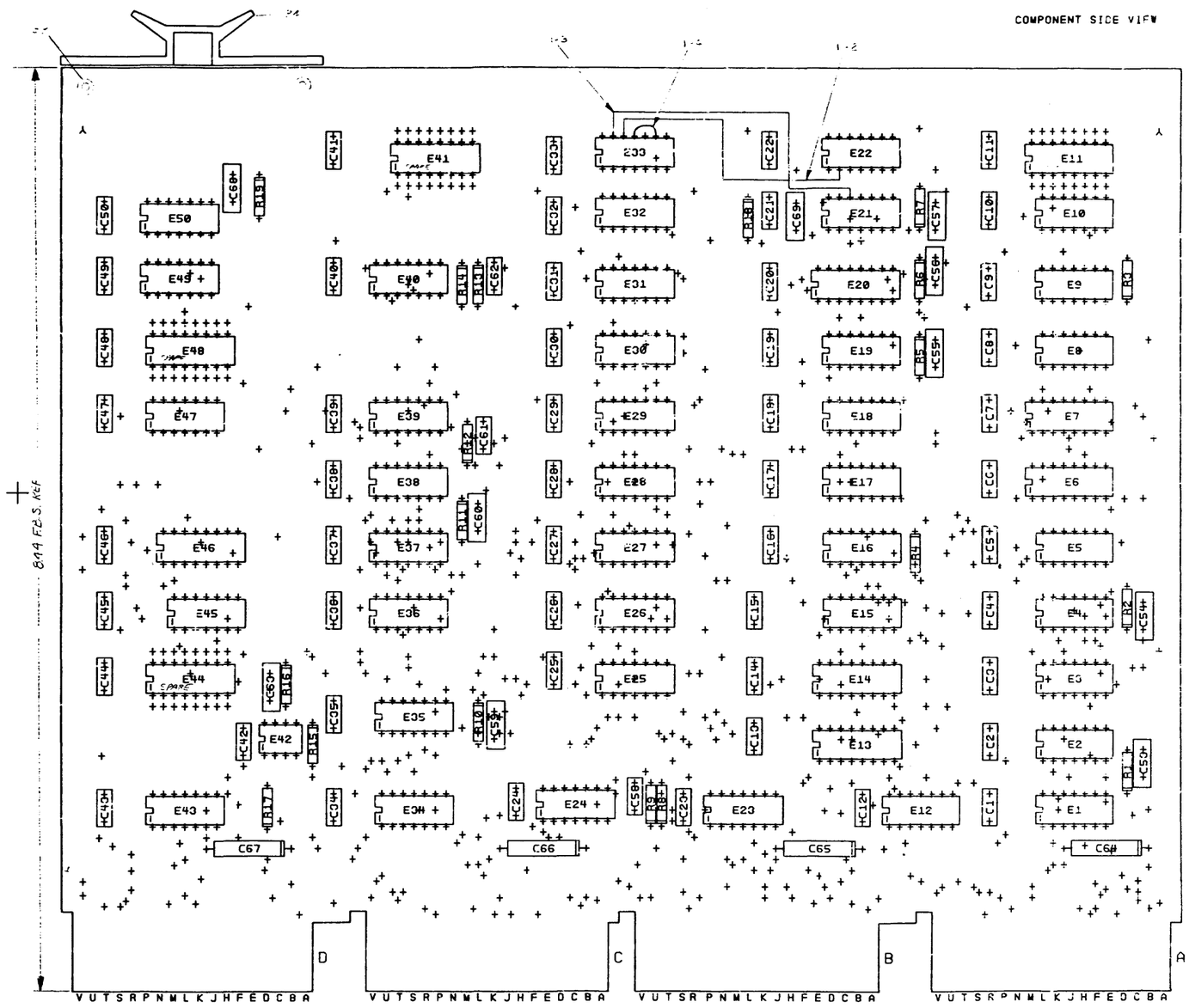

NOTES:

CHK	CHANGE	REV
	M8932-1	B
	J. VAGIAS	77

ETCH REV. B
P.C. DESIGN DATA BASE REV. B

SIGNATURES	DATE
DRN. S. Kelly	14-2-77
CHK'D	
ENG.	
PROJ. ENG.	1-2-77
PROD.	
SCALE	
SHT. 1 OF 5	
NEXT HIGHER ASSY.	

digital

TITLE TAPE CONTROL PE

SIZE	CODE	NUMBER	REV
D	11A	M8932-0-0	B

MS# 81143

DIGITAL EQUIPMENT CORPORATION
PARTS LIST

MADE BY Joan Rogers DATE 28 July 76	CHECKED P. Bossman DATE 27 OCT 76	SECTION 1
ENG Jim Vogus DATE 1-21-77	PROD G. Dillard DATE 24 JAN 77	ISSUED SECTION 1

NOTES: USED ON OPTION/MODEL TM03

ITEM NO.	DRAWING NO.	PART NO.	DESCRIPTION	QUANTITY/VARIATION	REF DESIGNATION
	D-CS-M8932-Ø-1		CIRCUIT SCHEMATIC	REF	
	D-UA-M8932-Ø-Ø		UNIT ASSEMBLY	REF	
	B-DD-M8932-Ø		DWG DIRECTORY	REF	
1	D-MD-5012383-Ø-Ø		ETCHED CIRCUIT BD.	1	
2		10-00021-00	CAP 220 PF	1	C53
3		10-00054-00	CAP 1500 PF 250V DISC	4	C55,C56,C57,C60
4		10-00042-00	CAP 1000 PF MICA	3	C54,C59,C63
5		10-01610-01	CAP .01 MFD 100V 20% DISC	53	C1 thru C50, C58,C61,C62
6		10-05306-00	CAP 6.8 MFD 35V 10% S. TANT	4	C64,C65,C66,C67
7		13-00229-00	RES 100 ¼W 5%	4	R1,R2 ,R18,R19
8		13-00250-00	RES 150 ¼W 5%	2	R10,R16
9		13-00271-00	RES 220 ¼W 5%	3	R9,R12,R13
10		13-00295-00	RES 330 ¼W 5%	2	R3,R14
11		13-00365-00	RES 1K ¼W 5%	4	R4,R8,R15,R17
37		13-00316-00	RES 470 ¼W 5%	4	R5,R6,R7, R11
12		19-05547-00	I.C. DEC 7474	6	E4,E8,E29,E36,E39,E40
13		19-05575-00	I.C. DEC 7400	6	E2,E9,F25,E31,E32,E37
14		19-05576-00	I.C. DEC 74[illegible]0	2	E12, E15
15		19-05578-00	I.C. DEC 7430	1	E24

E.C.O. NO. 00001

THIS DRAWING AND SPECIFICATIONS, HEREIN, ARE THE PROPERTY OF DIGITAL EQUIPMENT CORPORATION AND SHALL NOT BE REPRODUCED OR COPIED OR USED IN WHOLE OR IN PART AS THE BASIS FOR THE MANUFACTURE OR SALE OF ITEMS WITHOUT WRITTEN PERMISSION. COPYRIGHT © 1976 DIGITAL EQUIPMENT CORPORATION"

TITLE: TAPE CONTROL PE

ASSY NO. D-UA-M8932-0-0

SHEET 1 OF 3

SIZE B | CODE PL | NUMBER M8932-Ø-Ø | REV. B

INSERTION PARTS LIST DATA BASE REV A

DRB 125

DIGITAL EQUIPMENT CORPORATION
PARTS LIST

MADE BY Joan Rogers
DATE 28 July 76
ENG [signature]
DATE 1-21-77

CHECKED [signature]
DATE 27 OCT 76
PROD G. Dillard
DATE 24 JAN 77

SECTION 1
ISSUED SECTION 1

NOTES: USED ON OPTION/MODEL TM03

ITEM NO.	DRAWING NO.	PART NO.	DESCRIPTION	QUANTITY/VARIATION	REF DESIGNATION
16		19-05579-00	I.C. DEC 7440	2	E1,E26
17		19-05580-00	I.C. DEC 7450	1	E30
18		19-05590-00	I.C DEC 7401	1	E27
19		19-09004-00	I.C. DEC 7402	5	E3,E16,E19,E28,E49
20		19-09686-00	I.C. DEC 7404	2	E35,E47
21		19-09930-00	I.C. DEC 7405	1	E43
22		19-10035-00	I.C. DEC 74197	3	E21, E22,E50
23		19-10091-00	I.C. DEC 7437	1	E10
24		19-10155-00	I.C. DEC 7408	5	E18,E33,E34,E38,E45
25		19-10406-00	I.C. DEC 75451	1	E42
26		19-10650-00	I.C. DEC 74161	2	E6,E7
27		19-10651-00	I.C. DEC 74175	1	E14
28		19-10724-00	I.C. DEC 74180	1	E23
29		19-10878-00	I.C. DEC 7427	2	E5,E17
30			SPARES 16 PIN I.C.	4	E11,E41,E44,E48
31		23-359A2-00	256 x 4 BIT PROM OPEN COLLECTOR	1	E20
32		23-409A9-00	512 x 4 BIT BIPOLAR, TRI-STATE	1	E13
33		90-06732-00	EYELET	8	
34		90-08337-06	HANDLE, FLIPCHIP, MAGENTA	4	

E.C.O. NO.

THIS DRAWING AND SPECIFICATIONS, HEREIN, ARE THE PROPERTY OF DIGITAL EQUIPMENT CORPORATION AND SHALL NOT BE REPRODUCED OR COPIED OR USED IN WHOLE OR IN PART AS THE BASIS FOR THE MANUFACTURE OR SALE OF ITEMS WITHOUT WRITTEN PERMISSION COPYRIGHT © 1976 DIGITAL EQUIPMENT CORPORATION

TITLE: TAPE CONTROL PE

ASSY NO. D-UA-M8932-0-0

SHEET 2 OF 3

SIZE B | CODE PL | NUMBER M8932-Ø-Ø | REV. B

INSERTION PARTS LIST DATA BASE REV A

DIGITAL EQUIPMENT CORPORATION
PARTS LIST

MADE BY Joan Rogers DATE 28 July 76	CHECKED P. Bozeman DATE 27 Oct 76	SECTION 1
ENG Jim Rogers DATE 1-21-77	PROD G. Dillard DATE 24 JAN 77	ISSUED SECTION 1

NOTES:

USED ON OPTION/MODEL TM03

ITEM NO.	DRAWING NO.	PART NO.	DESCRIPTION	QUANTITY/VARIATION	REF DESIGNATION
35		10-00018-00	CAP 120 PF 100V MICA	2	C68,C69
36		23-408A9-00	512 X 4 BIT BIPOLAR, TRI-STATE	1	E46
37		91-05740-55	WIRE 30AWG, GREEN	A/R	

E.C.O. NO.

THIS DRAWING AND SPECIFICATIONS, HEREIN, ARE THE PROPERTY OF DIGITAL EQUIPMENT CORPORATION AND SHALL NOT BE REPRODUCED OR COPIED OR USED IN WHOLE OR IN PART AS THE BASIS FOR THE MANUFACTURE OR SALE OF ITEMS WITHOUT WRITTEN PERMISSION COPYRIGHT © 1976 . DIGITAL EQUIPMENT CORPORATION"

TITLE	ASSY NO.	SIZE	CODE	NUMBER	REV.
TAPE CONTROL PE	D-UA-M8932-0-0	B	PL	M8932-Ø-Ø	B
	SHEET 3 OF 3	INSERTION PARTS LIST DATA BASE REV			

EN 01140A 16 8276(325) DRB 125

"THIS DRAWING AND SPECIFICATIONS, HEREIN, ARE THE PROPERTY OF DIGITAL EQUIPMENT CORPORATION AND SHALL NOT BE REPRODUCED OR COPIED OR USED IN WHOLE OR IN PART AS THE BASIS FOR THE MANUFACTURE OR SALE OF ITEMS WITHOUT WRITTEN PERMISSION.
COPYRIGHT © 1976 DIGITAL EQUIPMENT CORPORATION"

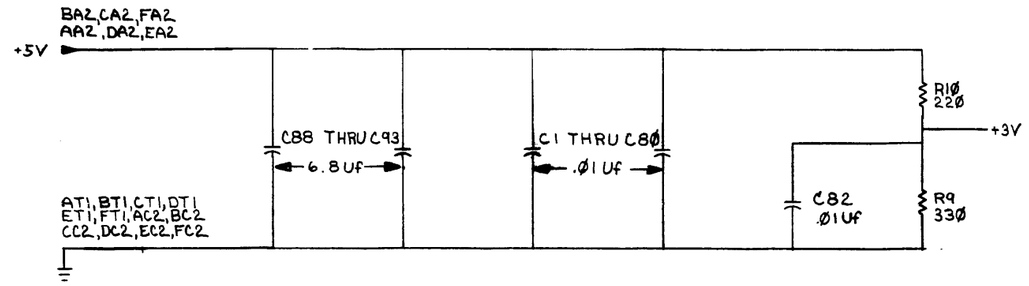

74153 FUNCTION TABLE

SELECT INPUTS		DATA INPUTS				OUTPUT
S1	S0	A	B	C	D	F
L	L	L	X	X	X	L
L	L	H	X	X	X	H
L	H	X	L	X	X	L
L	H	X	H	X	X	H
H	L	X	X	L	X	L
H	L	X	X	H	X	H
H	H	X	X	X	L	L
H	H	X	X	X	H	H

NOTE

IF M8933 IS TO BE USED IN TM02 BACKPANEL IT WILL BE NECESSARY TO ADD A 74180 IC AT LOC E-41 M8933 IS NORMALLY BUILT FOR TM03 BACKPANEL WIRING AND WILL HAVE LOC. E-44 EMPTY. FOR TM03 SIGNAL WDBFO PH IS WIRED ON BACKPANEL, FOR TM02 OPERATION THIS SIGNAL IS NOT USED

REVISIONS		
CHG	CHANGE NO.	REV.
	M8933-0000	A
	M8933-0000	B

DRN. G. MOSES
CHK. J. Vagias, 1 Mar 77
ENG. Jon Volcheck 8 Mar 77
PROJ. ENG. Jon Volcheck 25 Mar 77
PROD. M. Dillon 25 Mar 77
NEXT HIGHER ASSY.
B-DD-M8933-0
SCALE
SHEET 1 OF 7

FIRST USED ON TM03

TITLE
TAPE CONTROL
COMMON MODE (TCCM2)

SIZE	CODE	NUMBER	REV.
D	CS	M8933-0-1	A

DIST.

"THIS DRAWING AND SPECIFICATIONS, HEREIN, ARE THE PROPERTY OF DIGITAL EQUIPMENT CORPORATION AND SHALL NOT BE REPRODUCED OR COPIED OR USED IN WHOLE OR IN PART AS THE BASIS FOR THE MANUFACTURE OR SALE OF ITEMS WITHOUT WRITTEN PERMISSION.
COPYRIGHT © 1979, DIGITAL EQUIPMENT CORPORATION"

WRITE MUX AND WRITE BUFFER

BFLR2, BF4 WDBF0TH DN1 / CNRZ2 CRC7(I)H CP1 → 74153 E34 (A1 B1 C1 D1 → 1Y; S0 S1 STB1)
BFLR2, BF4 WDBF06H DM1 / CNRZ2 CRC6(I)H CN1 → 74153 E34 (A0 B0 C0 D0 → 1Y; S0 S1 STB0)
BFLR2, BF4 WDBF05H DL1 / CNRZ2 CRC5(I)H CM1 → 74153 E25 (A1 B1 C1 D1 → 1Y; S0 S1 STB1)
CNRZ2 CRC4(I)H CK1 / BFLR2, BF4 WDBF04H DK1 → 74153 E25 (A0 B0 C0 D0 → 1Y; S0 S1 STB0)
BFLR2, BF4 WDBF03H DV2 / CNRZ2 CRC3(I)H CS1 → 74153 E33 (A1 B1 C1 D1 → 1Y; S0 S1 STB1)
BFLR2, BF4 WDBF02H DE1 / CNRZ2 CRC2(I)H CE1 → 74153 E26 (A0 B0 C0 D0 → 1Y; S0 S1 STB0)
BFLR2, BF4 WDBF01H DP1 / CNRZ2 CRC1(I)H CR1 → 74153 E33 (A0 B0 C0 D0 → 1Y; S0 S1 STB0)
BFLR2, BF4 WDBF00H DJ1 / CNRZ2 CRC0(I)H CJ1 → 74153 E26 (A1 B1 C1 D1 → 1Y; S0 S1 STB1)
CNRZ2 CRCP(I)H CL1 → 74153 E36 (A0 B0 C0 D0 → 1Y; S0 S1 STB0)

74175 E35 (D1 → R1(0) R1(1); CLK CLR) → FN1 TCCM2 WDWB0 7 (I)H
74175 E35 (D0 → R0(0) R0(1); CLK CLR) → FL2 TCCM2 WDWB0 6 (I)H
74175 E27 (D0 → R0(0) R0(1); CLK CLR) → FK2 TCCM2 WDWB0 5 (I)H
74175 E35 (D2 → R2(0) R2(1); CLK CLR) → DF2 TCCM2 WDWB05 (I) L / FF1 WDWB0 4 (I)H
74175 E35 (D3 → R3(0) R3(1); CLK CLR) → FR2 TCCM2 WDWB 0 3 (I)H
74175 E27 (D3 → R3(0) R3(1); CLK CLR) → FD1 TCC M2 WDWB0 2 (I)H
74175 E27 (D1 → R1(0) R1(1); CLK CLR) → FP1 TCCM2 WDWB0 1 (I)H
74175 E27 (D2 → R2(0) R2(1); CLK CLR) → FE1 TCCM2 WDWB0 Ø (I) H
+3V → 7474 E28 (D 1 C Ø) → FJ2 TCCM2 WDWB0 P (I) H

* MS914 PREFIX IS BFLR2,BF4 IS M8906 PREFIX

BF4 WDBF02 H DE1 / BF4 WDBF04 H DK1 / BF4 WDBF06 H DM1 → 7427 E42
BF4 WDBF00 H DU1 / BF4 WDBF03 H DV1 / BF4 WDBF05 H DL1 → 7427 E42
BF4 WDBF07 H DN1 / BF4 WDBF01 H DP1 → 7427 E42
7418 E43 → 7404 E31 → PVN ALL ZEROS H
DP2 → TCCM2 XWD4 H

* SEE NOTE: 74180 E41 EVEN PARITY TREE (D0 D2 D4 D1 D7 D3 D5 D6 EVEN IN) → EVEN OUT, ODD OUT; ODD IN
MR6 PVN H FA1 / TCCM7 PESB L → 7408 E69 → 7404 E51
MR5 INC: PREAMBLE L AA1 → 7486 E29
BF4 WDBF0 P H CR2 / TCPE3 ONES L CL2 → 7408 E32 → TCCM2 ONES H
TCCM4 CRC STRB H → 7402 E45 → DR1 → 7486 E29 → TCCM2 XWDP H
TCCM7 PESB H / TCCM4 PE CLK(I) L → 7408 E44 → 7402 E45
TCPE3 DATA(I)H CB2 → 7408 E44 → 7402 E45 → TCCM2 DATA CLK H
TCCM7 PESB L
TCCM4 WBCLK H DH1 / TCCM2 CLR P WB L

TCCM2 WDWB0 P(I)H FJ2 / TCCM3 ID BURST TIME(I)H → 7400 E79 → 7400 E79 → TCCM2 PARITY DATA SET UP H
TCPE3 ONES L CL2

MB16 DRV SET PLS H → 7474 E23 → TCCM2 TMI(1)H / AB2 TCCM2 TMI(0)H
TCCM4 CRC STRB + LRC STRB L
SBC2 7CH H CU2 → 7400 E22 → AR1 TCCM2 7CH TM 1
TCCM2 TMI(1)H
7400 E32 → BB2 TCCM2 7CH TM Ø
TCCM7 7CH L
MB15 WFMK L CF2 / TCCM 7 PESB H → 7402 E21 → 7404 E31
MB15 WRITE H AR2 / TCCM4 LRC STRB(SB) L AK2 → 7433 E36 → 7408 E36 → TCCM2 CLR P WB L
TCCM3 ID BURST TIME (I) L → 7408 E36

REVISIONS		
CHK	CHANGE NO.	REV.

TITLE	SIZE	CODE	NUMBER	REV.
TAPE CONTROL COMMON MODE (TCCM2)	D	CS	M8933-Ø-1	B
SCALE	SHEET 2 OF 7	DIST		

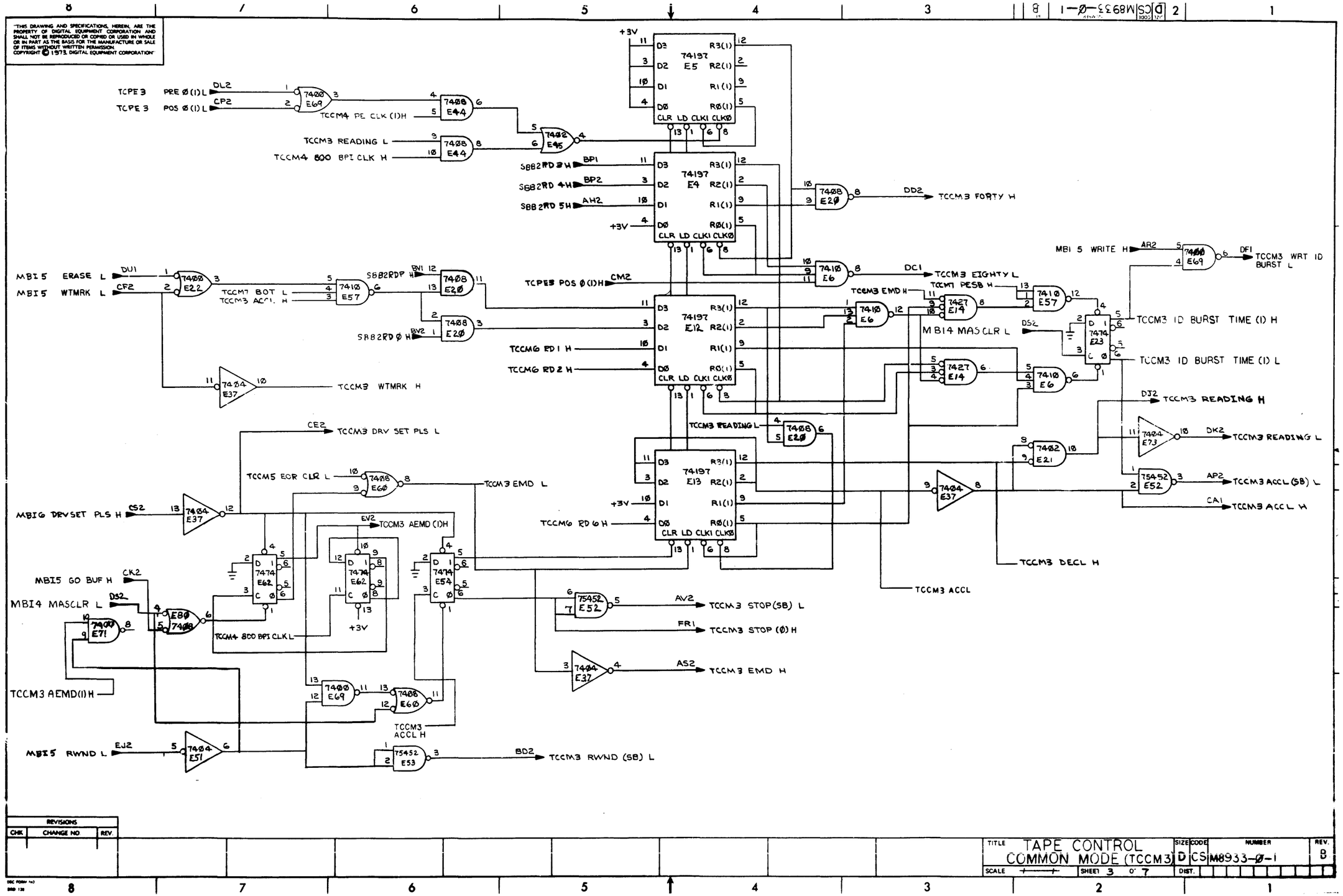

REVISIONS		
CHK	CHANGE NO.	REV.

TITLE TAPE CONTROL COMMON MODE (TCCM3)

SIZE D CODE CS NUMBER M8933-Ø-1 REV. B

SCALE SHEET 3 OF 7 DIST.

"THIS DRAWING AND SPECIFICATIONS, HEREIN, ARE THE PROPERTY OF DIGITAL EQUIPMENT CORPORATION AND SHALL NOT BE REPRODUCED OR COPIED OR USED IN WHOLE OR IN PART AS THE BASIS FOR THE MANUFACTURE OR SALE OF ITEMS WITHOUT WRITTEN PERMISSION.
COPYRIGHT © 1979, DIGITAL EQUIPMENT CORPORATION"

MBI5 WRITE H
MBI5 DATA XFER H
MBI6 DRV SET PLS H
TCCM4 WRT CLK H
MBI9 WRT END L
TCCM3 WTMRK H
TCCM7 PESB H
TCCM4 WB CLK L
TCCM3 WTMRK H
TCCM5 EDRS L
TCCM4 WRT CLK H
TCCM7 PESB L
SBB2 TAPE WRT CLK
MR5 MM CLK(1)H
MR5 WRP 2 L
MR5 WRP 1 L
MR5 WRP 3 L
TCCM3 DECL H
MR5 WRPØ + WRP 4 L
TCCM3 DRV SET PLS L
MBI5 ERASE L
MBI5 SPACE H
MBI6 DRV SET PLS H
MBI4 MAS CLR L
TCCM7 PESB L
TCCM4 WDR (1) H
TCCM4 WDR (1) L
TCCM4 TM WIP (1) H
TCCM3 WTMRK H
SBC2 7 CH H
TCCM7 PES B L
TCCM4 WRT CLK L
TCPE 3 PE WRT CLK EBNL L
TCCM2 DATA CLK H
TCCM4 WRT CLK H
TCCM4 WRT CLK L
TCCM3 ACCL (SB) L
SBC2 MOL H
TCCM4 SLAVE SET PLS H
TCCM4 SPACE L
TCCM4 ERROR RESET (Ø) L
SBB2 CLOCK H
MBI 4 MASCLR L
TCCM4 CRC STRB H
TCCM4 LRC STRB (SB) L
TCCM4 CRC STRB + LRC STRB L
TCCM4 WRT CLK ENBL L
TCCM4 WRT CLK ENBL H
TCCM4 REC (SB) L
TCCM4 WB CLK H
TCCM4 WRT STRB H
TCCM4 WB CLK L
TCCM4 PE CLK (1) H
TCCM4 PE CLK (1) L
TCCM4 ST CLK L
TCCM4 MOL L
TCCM4 200 BPI CLK H
TCCM4 800 BPI CLK L
TCCM4 8ØØ BPI CLK H
TCCM4 DATA HALF H

REVISIONS		
CHK	CHANGE NO.	REV.

TITLE TAPE CONTROL COMMON MODE (TCCM4)		SIZE D	CODE CS	NUMBER M8933-Ø-1	REV. B
SCALE	SHEET 4 OF 7	DIST.			

"THIS DRAWING AND SPECIFICATIONS HEREIN, ARE THE PROPERTY OF DIGITAL EQUIPMENT CORPORATION AND SHALL NOT BE REPRODUCED OR COPIED OR USED IN WHOLE OR IN PART AS THE BASIS FOR THE MANUFACTURE OR SALE OF ITEMS WITHOUT WRITTEN PERMISSION
COPYRIGHT © 1973 DIGITAL EQUIPMENT CORPORATION

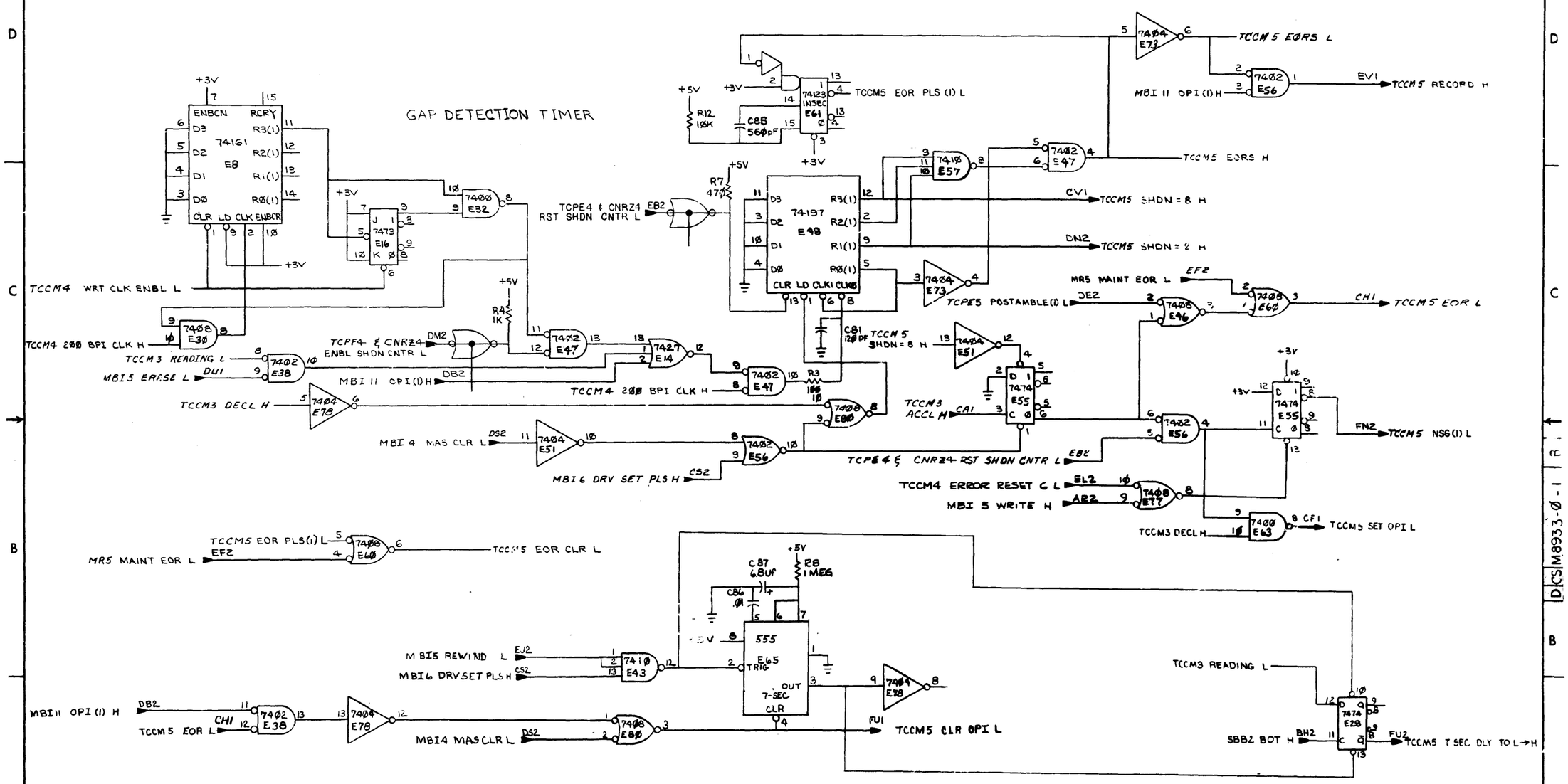

REVISIONS		
CHK	CHANGE NO	REV

TITLE	SIZE	CODE	NUMBER	REV.
TAPE CONTROL COMMON MODE (TCCM5)	D	CS	M8933-Ø-1	B
SCALE	SHEET 5 OF 7	DIST.		

"THIS DRAWING AND SPECIFICATIONS, HEREIN, ARE THE PROPERTY OF DIGITAL EQUIPMENT CORPORATION AND SHALL NOT BE REPRODUCED OR COPIED OR USED IN WHOLE OR IN PART AS THE BASIS FOR THE MANUFACTURE OR SALE OF ITEMS WITHOUT WRITTEN PERMISSION.
COPYRIGHT © 1975, DIGITAL EQUIPMENT CORPORATION"

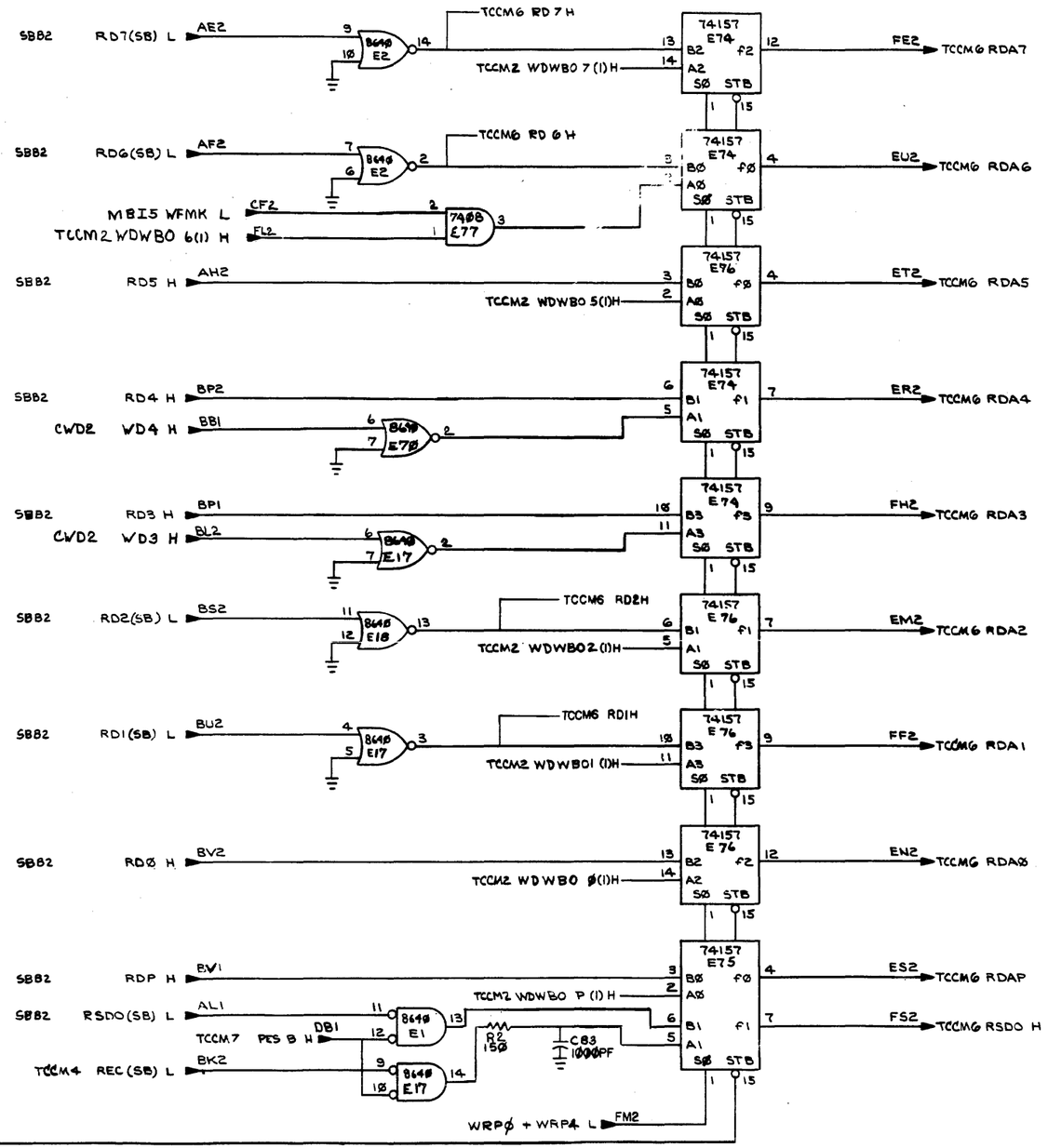

REVISIONS		
CHK	CHANGE NO	REV.

TITLE	SIZE	CODE	NUMBER	REV.
TAPE CONTROL COMMON MODE (TCCM6)	D	CS	M8933-Ø-1	B
SCALE	SHEET 6 OF 7	DIST.		

DEC FORM NO. DRD 130

DCSM8933-Ø-1

"THIS DRAWING AND SPECIFICATIONS, HEREIN, ARE THE PROPERTY OF DIGITAL EQUIPMENT CORPORATION AND SHALL NOT BE REPRODUCED OR COPIED OR USED IN WHOLE OR IN PART AS THE BASIS FOR THE MANUFACTURE OR SALE OF ITEMS WITHOUT WRITTEN PERMISSION.
COPYRIGHT © 1973, DIGITAL EQUIPMENT CORPORATION"

SN,DS REGISTER MUX

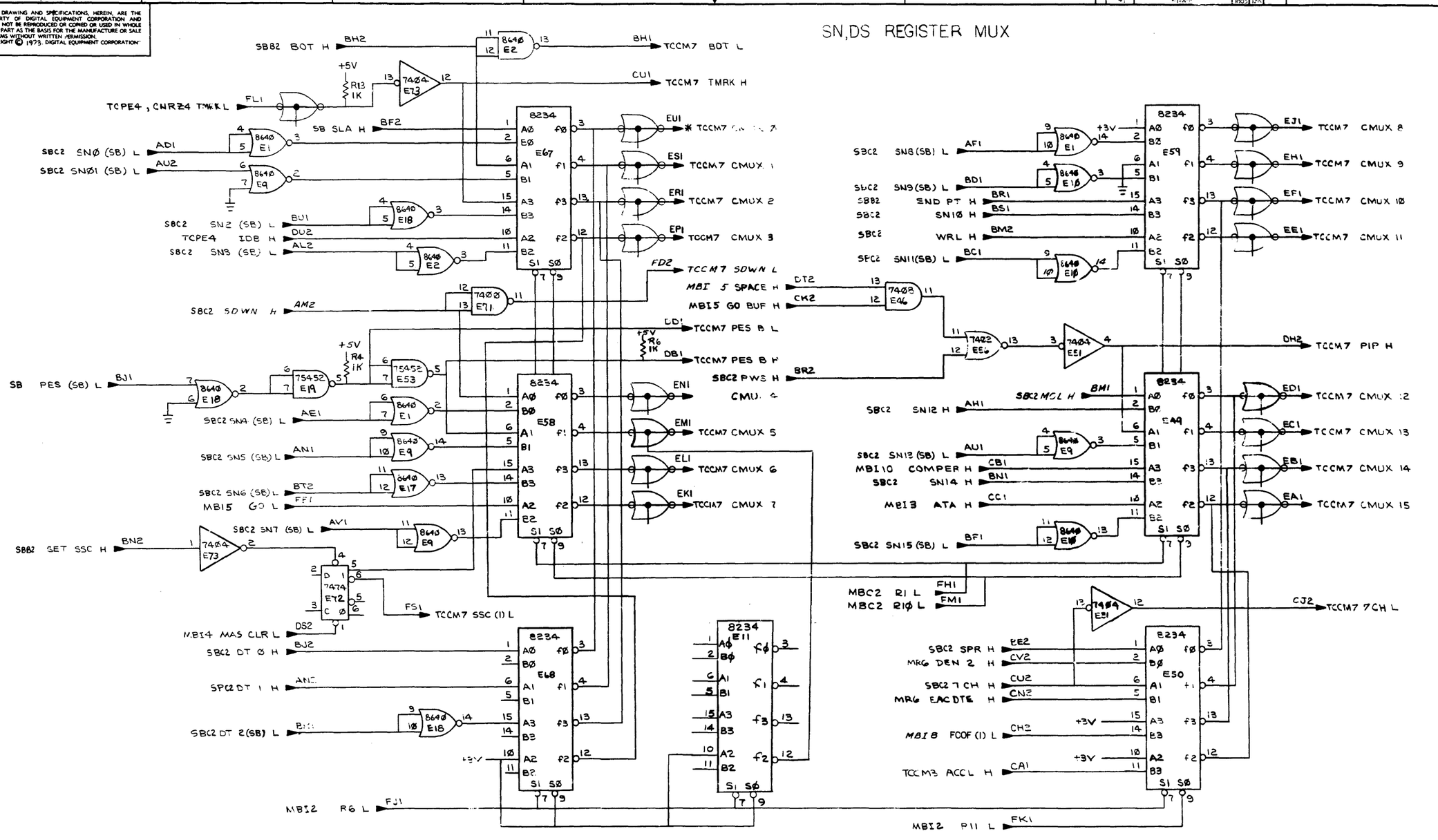

* CMUX LINES ALSO DRIVEN FROM M8905, M8909

REVISIONS		
CHK	CHANGE NO	REV

TITLE	SIZE	CODE	NUMBER	REV
TAPE CONTROL COMMAND MODE (TCCM7)	D	CS	M8933-Ø-1	B
SCALE	SHEET 7 OF 7	DIST.		

DCSM8933-Ø-1

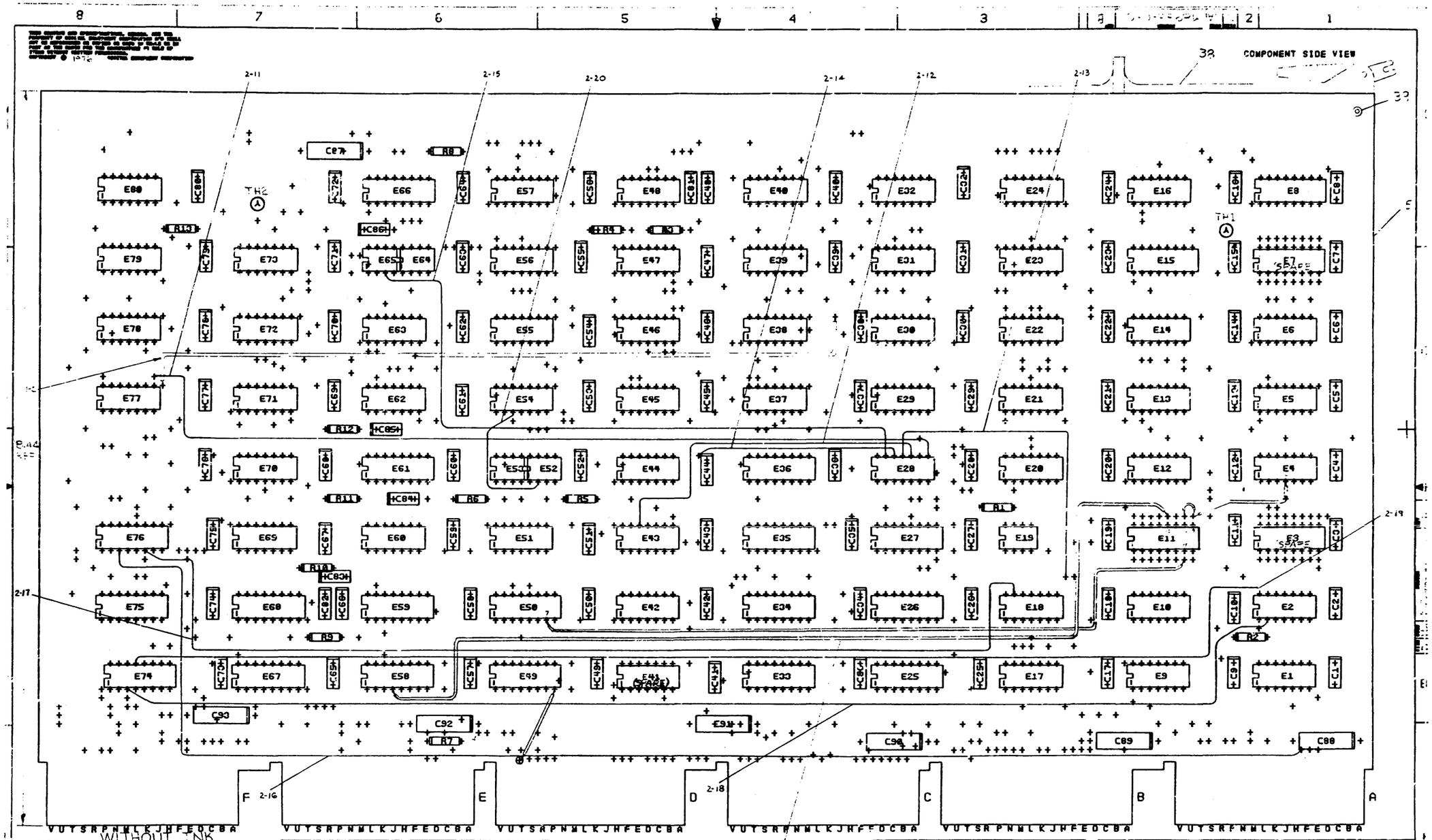
COMPONENT SIDE VIEW
2-11
2-15
2-20
2-14
2-12
2-13
2-19
2-17
2-16
2-18
TH1
TH2
E80
E66
E57
E48
E40
E32
E24
E16
E8
E79
E73
E65
E64
E56
E47
E39
E31
E23
E15
E7
E78
E72
E63
E55
E46
E38
E30
E22
E14
E6
E77
E71
E62
E54
E45
E37
E29
E21
E13
E5
E70
E61
E53
E52
E44
E36
E28
E20
E12
E4
E76
E69
E60
E51
E43
E35
E27
E19
E11
E3
E75
E68
E59
E50
E42
E34
E26
E18
E10
E2
E74
E67
E58
E49
E41
E33
E25
E17
E9
E1
C87
R8
R13
R4
R3
R12
R11
R6
R5
R1
R10
R9
R2
R7
C93
C92
C90
C89
C88
F
E
D
C
B
A
V U T S R P N M L K J H F E D C B A
WITHOUT INK
NOTES:
REWORK INSTRUCTIONS:
1. ADD IC 8234 (DEC PT # 9 11:15:00) AT LOCATION E11.
2. ADD JUMPERS:
A. E11-9 TO E11-10
B. E11-9 TO E4-4
C. E11-12 TO E58-4
D. E11-7 TO E50-7
E. E49-8 TO FEEDTHRU CONNECTING TO DT1
CHANGE NO
REV
M8933-1
A
J. VAGIAS
M8933-2
B
P. RAIKUNEN
40 TYP
SEE NOTES FOR REWORK INSTR
ETCH REV.
P.C. DESIGN DATA BASE REV.
SIGNATURES
DATE
DRN.
CHK'D.
ENG.
PROJ.ENG.
PROD.
SCALE 2/1
SHT. 1 OF 8
NEXT HIGHER ASSY. B-DDM
digital
TITLE TAPE CONTROL
MAIN MODE
SIZE D
CODE UA
NUMBER
REV
1 MS# 10454

LINE	ITEM	DOCUMENT NO.	PART NO.		DESCRIPTION		QTY	REFERENCE DESIGNATORS
1	1	D-CS-M8933-0-1			CIRCUIT SCHEMATIC		REF	
2	2	D-UA-M8933-0-0			UNIT ASSY.		REF	
3	3	D-MD-5012482-0-0			DRILL & ETCH DRAWING		REF	
4	4	B-DD-M8933-0-0			DWG. DIRECTORY		REF	
5	5		5012482-00		M8933		1	
6	6		1001610-00		.01 MFD 50V Z5U 309CER/8000PF MIN		82	C1-C80,C82,C86
7	7		1005306-00		6.8MFD 35V 10% 150D S.TA	(10-00	7	C87-C93
8	8		1000018-00		120.0 MMF 100V 5%200PPM DM15S	(10-00	1	C81
9	9		1000042-00		1000.0 MMF 100V 5%200PPM DM15S	(10-00	1	C83
10	10		1000025-00		560.0 MMF 100V 5%200PPM DM15S	(10-00	2	C84,C85
11	11		1300316-00		470 1/4W 5% CC	(13-00	1	R7
12	12		1300365-00		1 K 1/4W 5% CC	(13-00	5	R1,R4-R6,R13
13	13		1300479-00		10 K 1/4W 5% CC	(13-00	2	R11,R12
14	14		1300229-00		100 1/4W 5% CC	(13-00	1	R3
15	15		1300250-00		150 1/4W 5% CC	(13-00	1	R2
16	16		1300271-00		220 1/4W 5% CC	(13-00	1	R10
17	17		1300295-00		330 1/4W 5% CC	(13-00	1	R9
18	18		1309595-00		1 M 1/4W 5% CC	(13-00	1	R8
19	19		1905575-00		7400 NAND GATE-QUAD 2IN		6	E22,E32,E63,E69,E71,E79
20	20		1909004-00	DEC	7402 NOR GATE-QUAD 2IN		5	E21,E38,E45,E47,E56
21	21		1909686-00		7404 INVERTER GATE-HEX 1IN		5	E31,E37,E51,E73,E78
22	22		1911944-00		555CN TIMER,FUNCT.BLOCK		1	E65
23	23		1910155-00	DEC	7408 AND GATE,POS.QUAD 2IN	14	8 CONT	E20,E30,E40,E44,E46,E60,E77,E80
24	24		1905576-00		7410 NAND GATE-TRIPLE 3IN		4	E6,E43,E57,E70
25	25		1910878-00		7427 NOR GATE-TRIPLE 3IN		2	E14,E42
26	26		1905587-00	DEC	7473 FF-JK DUAL,MASTER SLAVE,10MHZ		1	E16
27	27		1905547-00	DEC	7474 FF-D DUAL,EDGE TRIGGER,15MHZ		7	E23,E28,E39,E54,E55,E62,E72
28	28		1910011-00	DEC	7486 X-OR GATE-QUAD 2INPUT		1	E29
29	29		1910436-00	DEC	74123 ONE SHOT-DUAL,RETRIGGERABLE		1	E61

REVISION HISTORY			VARIATIONS FOR THIS ASSY.
CHK	ECO NO	REV	
			00
R.R	00002	B	

FIRST USED ON: TM03

MADE BY: M.RIPLEY DATE: 14-MAR-78

CHECKED: P.BOSSMAN DATE: 14-MAR-78

DSN.ENG.: J.VAGIAS DATE: 14-MAR-78

PROD.: G.DILLARD DATE: 14-MAR-78

RESP.ENG.: J.VAGIAS DATE: 14-MAR-78

DIGITAL EQUIPMENT CORPORATION
MAYNARD, MASSACHUSETTS

TITLE
PARTS LIST
TAPE CONTROL COMMON MODE

SIZE	CODE	DOCUMENT NUMBER	REV
K	PL	M8933-0-DBP	B

EDIT# 6

*THIS DRAWING AND SPECIFICATIONS HEREIN, ARE THE PROPERTY OF DIGITAL EQUIPMENT CORPORATION AND SHALL NOT BE REPRODUCED OR COPIED OR USED IN WHOLE OR IN PART AS THE BASIS FOR THE MANUFACTURE OR SALE OF ITEMS WITHOUT WRITTEN PERMISSION.
COPYRIGHT 1978, DIGITAL EQUIPMENT CORPORATION *

LINE	ITEM	DOCUMENT NO.	PART NO.	DESCRIPTION	QTY	REFERENCE DESIGNATORS
30	30		1909937-00	74153 MUX 1 OF 4 (DUAL)	5	E25,E26,E33,E34,E36
31	31		1910655-00	74157 MUX 1 OF 2 (QUAD	4	E66,E74-E76
32	32		1910650-00	74161 COUNTER,SYNCHR. UP	2	E8,E15
33	33		1910651-00	DEC 74175 FF-D QUAD	2	E27,E35
34	34		1910035-00	DEC 74197 COUNTER,ASYNCH UP,H1 SPEED 828	6	E4,E5,E12,E13,E24,E48
35	35		1910645-00	75452 DRIVER,PERIPH,DUAL,NAND	4	E19,E52,E53,E64
36	36		1911315-00	8234 MUX 1 OF 4	7	E49,E50,E58,E59,E67,E68,E11
37	37		1911469-00	DEC 8640 RECEIVER,BUS,QUAD,UNIBUS,Q-BU	6	E1,E2,E9,E10,E17,E18
38	38		1210711-02	HANDLE ASSY,MOD DOEHLER-JARVIS	1	
39	39		9006732-00	EYELET, ROLLED FLANGE, .121 OD X .219 LG	12	
40	40		9105740-55	WIRE(WRAP)30AWG UL1423 (91-00 A/R		

DIGITAL EQUIPMENT CORPORATION MAYNARD, MASSACHUSETTS	TITLE: PARTS LIST TAPE CONTROL COMMON MODE	SIZE: K	CODE: PL	DOCUMENT NUMBER: M8933-0-DBP	REV: B

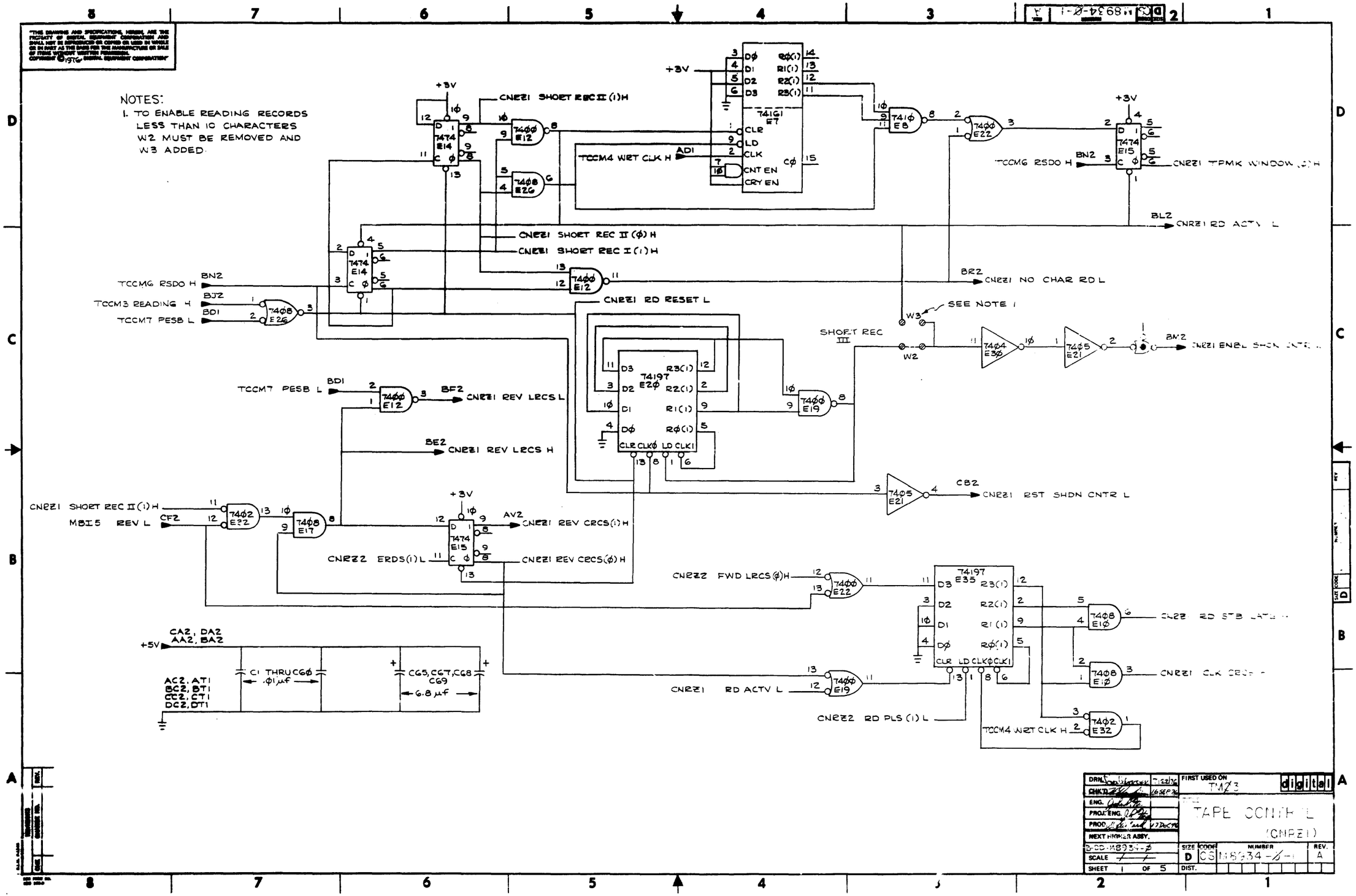
NOTES:
1. TO ENABLE READING RECORDS LESS THAN 10 CHARACTERS W2 MUST BE REMOVED AND W3 ADDED.
CNRZ1 SHORT REC II (1) H
CNRZ1 SHORT REC II (Ø) H
CNRZ1 SHORT REC I (1) H
CNRZ1 RD RESET L
TCCM4 WRT CLK H
TCCM6 RSDO H
TCCM3 READING H
TCCM7 PESB L
CNRZ1 REV LRCS L
CNRZ1 REV LRCS H
CNRZ1 SHORT REC II (1) H
MBI5 REV L
CNRZ1 REV CRCS (1) H
CNRZ2 ERDS (1) L
CNRZ1 REV CRCS (Ø) H
CNRZ2 FWD LRCS (Ø) H
CNRZ1 RD ACTV L
CNRZ2 RD PLS (1) L
CNRZ1 RD ACTV L
CNRZ1 NO CHAR RD L
SHORT REC III
SEE NOTE 1
CNRZ1 RST SHDN CNTR L
TCCM6 RSDO H
CNRZ1 TPMK WINDOW
CA2, DA2
AA2, BA2
AC2, AT1
BC2, BT1
CC2, CT1
DC2, DT1
C1 THRU C60
.01 µf
C65, C67, C68
C69
6.8 µf
+3V
+5V
7474 E14
7474 E15
7474 E15
74161 E7
74197 E20
74197 E35
DRN.
CHK'D.
ENG.
PROJ. ENG.
PROD.
NEXT HIGHER ASSY.
D-CD-M8934-0
SCALE
SHEET 1 OF 5
FIRST USED ON
TM23
digital
TAPE CONTROL
(CNRZ1)
SIZE D
CODE CS
NUMBER M8934-0-1
REV. A
DIST.

"THIS DRAWING AND SPECIFICATIONS, HEREIN, ARE THE PROPERTY OF DIGITAL EQUIPMENT CORPORATION AND SHALL NOT BE REPRODUCED OR COPIED OR USED IN WHOLE OR IN PART AS THE BASIS FOR MFG. MANUFACTURE OR SALE OF ITEMS WITHOUT WRITTEN PERMISSION.
COPYRIGHT © 1976, DIGITAL EQUIPMENT CORPORATION"

CNZZI SHORT REC I(ϕ) L
CNZZI SHORT REC II(ϕ) H
CNZZI TPMK WINDOW(ϕ)H
7427 E13
7405 E21
BM2
CNZZ2 ENBL SHDN CNTR L
TCCM5 SHDN 8(1) H
AV1
7400 E19
MBI4 INIT PLS H
DD1
7474 E27
TCCM3 DRV SET PLS L
AE2
TCCM4 ERROR RESET(1) L
CL2
7408 E26
+5V
R4 10K
CG2 120pf
CNZZ2 RD PLS (1) H
74123 E39
BM1
CNZZ2 ERDS (1) H
AH2
CNZZ2 ERDS(ϕ)H
+3V
TCCM7 PESB L
BD1
7401 E57
DL1
CNZZ2 TMRK L
CNZZ2 TMK H
AD2
CNZZ2 ES/IL TMRK L
CNZZI REV CRCS(1) L
CNZZ5 FMK CHAR L
CNZZ2 ERDS(1)H
7408 E26
7474 E27
7410 E18
AF2
CNZZ2 CLK L CK CHAR REG L
AU2
CNZZ2 FWD LRCS(1) H
CNZZ2 FWD LRCS(ϕ) H
7408 E10
CNZZI RD RESET L
7474 E5
MBI5 FWD H
AR2
ABZ
CNZZ2 FWD CRCS(1) H
CNZZI CLK CRCS H
CNZZ2 FWD CRCS(ϕ) H
TCCM5 READING L
BK2
7402 E11
CNZZ2 LRCS H
CNZZI REV LRCS L
7400 E22
CNZZ2 CRCS H
CNZZI REV CRCS(ϕ) H
7400 E12
AN2
CNZZ2 CHK CHAR L
CNZZ2 ERDS(1) H
7405 E21
CV2
CNZZ2 ERDS L
ME5 MAINT RDS L
AT2
TCCM7 PESB L
BD1
7402 E11
7405 E21
+5V
R8 1K
CWD3 45IPS L
DR2
ME5 MAINT RDS L
AT2
TCCM6 RDSO H
BN2
ME5 WRP 3 L
BU2
7400 E47
7486 E58
7474 E31
CNZZ2 ERDS(1)L
CK2
MBI5 GO BUF H
7408 E34
CNZZI RD STRB LATE H
7402 E32
R6 5.6K
CG3 1000pf
CNZZ2 RD PLS(1)H
CNZZ2 RD PLS(1)L
74123 E39

REVISIONS		
CHK	CHANGE NO.	REV.

TITLE	SIZE	CODE	NUMBER	REV.
TAPE CONTROL (CNRZ2)	D	CS	M8934-0-1	A
SCALE	SHEET 2 OF 5	DIST.		

"THIS DRAWING AND SPECIFICATIONS, HEREIN, ARE THE PROPERTY OF DIGITAL EQUIPMENT CORPORATION AND SHALL NOT BE REPRODUCED OR COPIED OR USED IN WHOLE OR IN PART AS THE BASIS FOR THE MANUFACTURE OR SALE OF ITEMS WITHOUT WRITTEN PERMISSION.
COPYRIGHT ©1976 DIGITAL EQUIPMENT CORPORATION"

MBI5 WRITE H
MR5 WRP4 L
MBI5 FWD H
CS1
DB1
AB2
74ØØ E45
74Ø8 E25
CNRZ3 CRC H
CNRZ3 CYCLE(3)1 L
74Ø2 E24
+5V
RG 1K
ENABLE ERROR COERECTION
W1
TCCM4 SPACE L
DP1
74Ø8 EZ5
DK2
CYCLE 1(1) H
CU1
CYCLE 2(1) H
CNRZ3 ENBL CYCLE 2 H
MBI7 REV H
CD2
AS2
MBI6 DRV SET PLS H
74Ø8 E49
7474 E29
74ØØ E45
MBI9 INIT PLS(1) L
CWD3 SAC L
DD2
DB2
74Ø8 E49
TCCM4 SPACE L
DP1
74Ø8 E1Ø
74Ø2 E23
R3 1ØØ
CG4 68Ø pf
CNRZ3 CYCLE 2 & 3 H
+3V
7474 E44
CR1
CNRZ3 CYCLE 3(1) H
CNRZ3 CYCLE 3(1) L
MBI5 GO BUFF H
CK2
CNRZ3 CYCLE 2(1) L
+5V
R5 22Ø
+3V
CG1 .Ø1µf
+CG6 6.8µf
R7 33Ø
+5V
R1 1K
BF5 SET VPAR L
BH2
TCCM4 SPACE L
DP1
DN1
SCBL SET VPE H
74ØØ E47
74Ø8 E17
CNRZ5 PARITY ERROR L
CNRZ1 REV CRCS L
CNRZ4 CLK VPE L
7427 E13
7474 E16
74Ø5 E36
DF1
CNRZ3 INC/VPE L
CNRZ 2 TMK H
CNRZ4 CRC ERROR H
CNRZ4 REV CRCE ENBL H
BD1
TCCM7 PESB L
74Ø8 E49
741Ø E8
7432 E28
TCCM5 EOB L
BT2
74Ø4 E3Ø
DV2
CNRZ3 CORR/CRC L
CNRZ3 CRC H
CNRZ2 FWD LRCS(Ø) H
CNRZ4 CRC ERROR L
CNRZ2 ERRS(1) H
74Ø2 E11
74Ø8 E17
TCCM7 PESB L
MR5 WRP 3 L
BD1
BU2
AV1
74Ø8 E17
74Ø8 E34
BV2
CNRZ3 PEF/LRC L
CNRZ2 FWD LRCS(1) L
CNRZ4 LRCC MATCH H
TCCM5 SHDN=8(1) H
74Ø2 E33
CL2
TCCM4 ERROR RESET(1) L
TCCM2 XWD P H
BF4 WDBFO 7(1) H
BF4 WDBFO 6(1) H
BF4 WDBFO 5(1) H
TCCM2 XWD 4 H
BF4 WDBFO 3(1) H
BF4 WDBFO 2(1) H
BF4 WDBFO 1(1) H
BF4 WDBFO Ø(1) H
TCCM4 WDR(1) H
85ØØ E6
CNRZ3 CRC P(1) H
CNRZ3 CRC 7(1) H
CNRZ3 CRC 6(1) H
CNRZ3 CRC 5(1) H
CNRZ3 CRC 4(1) H
CNRZ3 CRC 3(1) H
CNRZ3 CRC 2(1) H
CNRZ3 CRC 1(1) H
CNRZ3 CRC Ø(1) H
WE R CLK
MBIG DEV SET PLS H
74Ø4 E3Ø
74Ø2 E23
MR5 WRP 4 L
MR5 WRP 3 L
74ØØ E42
74Ø2 E23
TCCM4 CRC STRB H
TCCM4 WB CLK H
TCCM4 LRC STRB(BB) L
74Ø8 E25

REVISIONS		
CHK	CHANGE NO.	REV.

TITLE	SIZE	CODE	NUMBER	REV.
TAPE CONTROL (CNRZ3)	D	CS	MA934-Ø-	A
SCALE —	SHEET 3 OF 5		DIST.	

"THIS DRAWING AND SPECIFICATIONS, HEREIN, ARE THE PROPERTY OF DIGITAL EQUIPMENT CORPORATION AND SHALL NOT BE REPRODUCED OR COPIED OR USED IN WHOLE OR IN PART AS THE BASIS FOR THE MANUFACTURE OR SALE OF ITEMS WITHOUT WRITTEN PERMISSION.
COPYRIGHT © 1976 DIGITAL EQUIPMENT CORPORATION"

CNRZ4 CRC ERROR H

74Ø4 E48 — 1Ø — CNRZ4 CRC ERROR L

CNRZ3 CYCLE 2(1) H
CNRZ2 ERDS (1) H
74Ø4 E24 — 8

CNRZ5 CRC P 4 — 2Ø — DP
CNRZ5 CRC 7 H — 18 — DØ
CNRZ5 CRC 6 H — 19 — D1
CNRZ5 CRC 5 H — 23 — D2
CNRZ5 RD. 4 H — 1 — D3
CNRZ5 CRC 3 H — 5 — D4
CNRZ5 CRC 2 H — 4 — D5
CNRZ5 CRC 1 H — 6 — D6
CNRZ5 CRC Ø H — 2 — D7
WE C R

M 85ØØ E3 — CDP, CDØ, CD1, CD2, CD3, CD4, CD5, CD6, CD7

85Ø1 -4 — CDP, CDØ, CD1, CD2, CD3, CD4, CD5, CD6, CD7
VEC R C ED — M — 9

CNRZ3 CYCLE 2(1) L — 22
CNRZ3 CYCLE 2(1) L
CNRZ5 LRCS L
CNRZ2 ERDS(1) H
74Ø Ø E8 — 12
74Ø8 E25 — 11 — 16
CNRZ5 VEC H — 21

CNRZ3 CYCLE 3(1) H
74Ø2 E28 — 11 — CNRZ4 CLK VPE L

CNRZ3 ENBL CYCLE 2 H
74Ø2 E23 — 13

CNRZ3 CYCLE 3(1) L — 1Ø
74ØØ E47 — 8 — CNRZ4 LRCC MATCH H

MATCH
CNRZ5 RD P H — 19 — DP
CNRZ5 RD 7 H — 16 — DØ
CNRZ5 RD 6 H — 22 — D1
CNRZ5 RD 5 H — 14 — D2
CNRZ5 RD 4 H — 2Ø — D3
CNRZ5 RD 3 H — 1Ø — D4
CNRZ5 RD 2 H — 8 — D5
CNRZ5 RD 1 H — 2 — D6
CNRZ5 RD ØH — 3 — D7
85Ø2 E38 — QP, QØ, Q1, Q2, Q3, Q4, Q5, Q6, Q7
R CLK M — 21, 1, 4

MBIG DRV SET PLS H — AS2
MBSILCC L — DMI
74ØØ E19 — 3
74Ø4 E3Ø — 2
CNRZ2 ERDS(Ø)H
+3V

CNRZ3 CYCLE 2+3 H
+3V
74161 E5Ø — D3 D2 D1 DØ — R3(1) R2(1) R1(1) RØ(1) — CØ — CLR LD CLK CNT EN CRY EN
74ØØ E45 — 5, 4, 6

7442 E55 — DJ2 — CNRZ4 INC ERROR L
f9 — 11 — 1Ø
f8 — CNRZ4 TRK 4 ERR L
f7 — 9 — CNRZ4 TRK 7 ERR L
f6 — 7 — CNRZ4 TRK 6 ERR L
f5 — 6 — CNRZ4 TRK 5 ERR L
f4 — 5 — CNRZ4 TRK 3 ERR L
f3 — 4 — CNRZ4 TRK 9 ERR L
f2 — 3 — CNRZ4 TRK 1 ERR L
f1 — 2 — CNRZ4 TRK 8 ERR L
fØ — 1 — CNRZ4 TRK 2 ERR L
D3 D2 D1 DØ — 12, 13, 14, 15

74157 E1
CNRZ5 RD P H — AØ
CNRZ5 RD ØH — BØ
CNRZ5 RD 7 H — A1
CNRZ5 RD 1 H — B1
CNRZ5 RD 6 H — A2
CNRZ5 RD 2 H — B2
CNRZ5 RD 5 H — A3
CNRZ5 RD 3 H — B3
STB SØ — 15, 1
fØ — 4 — CNRZ4 CRC P H
f1 — 7 — CNRZ4 CRC 7 H
f2 — 9 — CNRZ4 CRC 6 H
f3 — 12 — CNRZ4 CRC 5 H

74157 E2
AØ BØ A1 B1 A2 B2 A3 B3 — STB SØ — 15, 1
fØ — 4 — CNRZ4 CRC 3 H
f1 — 7 — CNRZ4 CRC 2 H
f2 — 9 — CNRZ4 CRC 1 H
f3 — 12 — CNRZ4 CRC ØH

CNRZ3 CYCLE 2(1) L
MBI 7 REV H
CD2
74Ø8 E34 — 11 — CNRZ4 REV CRCE ENBL H

REVISIONS		
CHK	CHANGE NO.	REV.

TITLE	SIZE	CODE	NUMBER	REV.
TAPE CONTROL (CNRZ4)	D	CS	M 8934-Ø-1	A
SCALE —	SHEET 4 OF 5	DIST.		

"THIS DRAWING AND SPECIFICATIONS, HEREIN, ARE THE PROPERTY OF DIGITAL EQUIPMENT CORPORATION AND SHALL NOT BE REPRODUCED OR COPIED OR USED IN WHOLE OR IN PART AS THE BASIS FOR THE MANUFACTURE OR SALE OF ITEMS WITHOUT WRITTEN PERMISSION.
COPYRIGHT © 1976 DIGITAL EQUIPMENT CORPORATION"

TCCM6 RDA P H
CS2
MR5 WRP4 L
DBI
CNRZ2 CRCS H
7486 E43
74Φ2 E33
74175 E46
TCCMG RDA 7 H
DE2
TCCMG RDA 6 H
CU2
TCCMG RDA 5 H
CT2
D3 R3(1) CNRZ5 RD LATCH P(1)H
R3(Φ) CNRZ5 RD LATCH P(1)L
D2 R2(1) CNRZ5 RD LATCH 7(1)H
R2(Φ) CNRZ5 RD LATCH 7(1)L
D1 R1(1) CNRZ5 RD LATCH 6(1)H
R1(Φ) CNRZ5 RD LATCH 6(1)L
DΦ RΦ(1) CNRZ5 RD LATCH 5(1)H
RΦ(Φ) CNRZ5 RD LATCH 5(1)L
CLR CLK
CNRZ5 RD LATCH P(1)L
CNRZ5 RD LATCH 7(1)L
CNRZ5 RD LATCH 6(1)L
CNRZ5 RD LATCH 5(1)L
CNRZ5 RD LATCH 4(1)H
CNRZ5 RD LATCH 1(1)H
CNRZ5 RD LATCH Φ(1)H
7430 E56
DN2
CNRZ5 FMK CHAR L
CNRZ5 RD LATCH 3(1)H
CNRZ5 RD LATCH 2(1)H
74Φ2 E32
74174 E41
TCCMG RDA 4 H
CR2
TCCMG RDA 3 H
DH2
TCCMG RDA 2 H
CM2
TCCMG RDA 1 H
DF2
TCCMG RDA Φ H
CN2
D5 R5(1) CNRZ5 RD LATCH 4(1)H
D4 R4(1) CNRZ5 RD LATCH 3(1)H
D3 R3(1) CNRZ5 RD LATCH 2(1)H
D2 R2(1) CNRZ5 RD LATCH 1(1)H
D1 R1(1) CNRZ5 RD LATCH Φ(1)H
DΦ RΦ(1)
CLR CLK
TCCM7 PESB L
BDI
CNRZ2 RD PLS(1) H

CNRZ4 TRK 7 ERR L
74Φ2 E53
7486 E52
CNRZ5 RD 7 H
7405 E37
CL1
CNRZ5 RDB 7 L
CNRZ5 RD LATCH 7(1)H
CNRZ4 TRK 6 ERR L
CNRZ5 RD 6 H
CK1
CNRZ5 RDB 6 L
CNRZ5 RD LATCH 6(1)H
CNRZ4 TRK 5 ERR L
CNRZ5 RD 5 H
CJ1
CNRZ5 RDB 5 L
CNRZ5 RD LATCH 5(1)H
CNRZ4 TRK 3 ERR L
CNRZ5 RD 4 H
CF1
CNRZ5 RDB 4 L
CNRZ5 RD LATCH 4(1)H
CNRZ4 TRK 9 ERR L
74Φ2 E59
7486 E54
CNRZ5 RD 3 H
CV1
CNRZ5 RDB 3 L
CNRZ5 RD LATCH 3(1)H
CNRZ4 TRK 1 ERR L
CNRZ5 RD 2 H
CD1
CNRZ5 RDB 2 L
CNRZ5 RD LATCH 2(1)H
CNRZ4 TRK 8 ERR L
CNRZ5 RD 1 H
CP1
CNRZ5 RDB 1 L
CNRZ5 RD LATCH 1(1)H
CNRZ4 TRK 2 ERR L
CNRZ5 RD Φ H
CE1
CNRZ5 RDB Φ L
CNRZ5 RD LATCH Φ(1)H
CNRZ4 TRK 4 ERR L
74Φ2 E33
7486 E43
CNRZ5 RD P H
7405 E36
CH1
CNRZ5 RDB P L
CNRZ5 RD LATCH P(1)H

CNRZ2 CRCS H
74Φ4 E48
74ΦΦ E42
7486 E43
74Φ2 E33
74Φ4 E48
7432 E28
BUI
CNRZ5 B PAR L
CNRZ3 CYCLE 3(1) L
CNRZ5 PARITY ERROR L
CNRZ5 VRC H
CNRZ5 RD PAR ODD H
CNRZ2 LRCS H
CNRZ5 LRCS L
DAI
MR6 PVN .(1) H
CNRZ2 CHK CHAR L
CNRZ2 EERDS(Φ) H
74Φ8 E34
7474 E44
CK2
MBI5 GO BUF(1) H

74180 E51
CNRZ5 RD LATCH 7(1)H
CNRZ5 RD LATCH 6(1)H
CNRZ5 RD LATCH 5(1)H
CNRZ5 RD LATCH 4(1)H
CNRZ5 RD LATCH 3(1)H
CNRZ5 RD LATCH 2(1)H
CNRZ5 RD LATCH 1(1)H
CNRZ5 RD LATCH Φ(1)H
D4
D5
D7
D6 EVEN
DΦ ODD
D1
D2
D3
ODD EVEN
CNRZ5 READ PAR ODD H
CNRZ5 RD LATCH P(1)L
CNRZ5 RD LATCH P(1)H

REVISIONS		
CHK	CHANGE NO.	REV.

TITLE	TAPE CONTROL (CNRZ5)			
SIZE	CODE	NUMBER	REV.	
D	CS	M3934-0-1	A	
SCALE		SHEET 5 OF 5	DIST.	

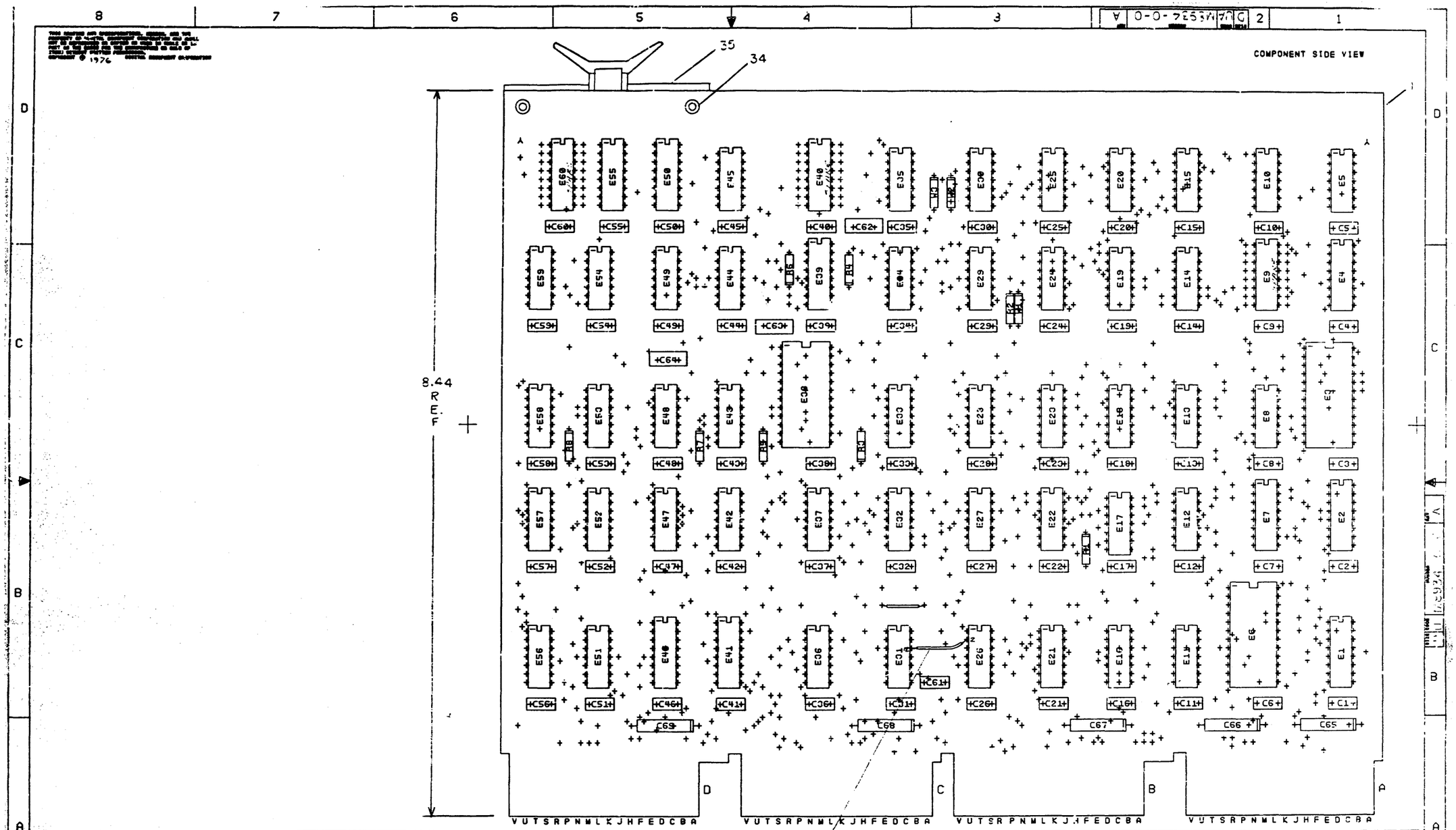

NOTES: 1. REWORK INSTRUCTIONS: ADD 2 (TWO) JUMPER WIRES AS SHOWN USING ITEM 40.

CHK	CHANGE NO	REV

FOR PARTS LIST REFER TO B-PL-M8934-0-0

ETCH REV.
P.C. DESIGN DATA BASE REV.

SIGNATURES	DATE
DRN.	
CHK'D.	
ENG.	
PROJ. ENG.	
PROD.	
SCALE 2/1	
SHT. 1 OF 3	
NEXT HIGHER ASSY. B-DD-M8934-0	

digital

TITLE TAPE CONTROL NRZI

SIZE	CODE	NUMBER	REV
	UA	M8934-0-0	A

1 MS#81150

DIGITAL EQUIPMENT CORPORATION
PARTS LIST

MADE BY Steve Marlow	CHECKED G. Bossman	SECTION 1
DATE Sept 10, 1976	DATE 16 Nov 76	
ENG John R Hoo	PROD J. Dillard	ISSUED SECTION 1
DATE	DATE 17 DEC 76	

NOTES: USED ON OPTION/MODEL TM03

ITEM NO.	DRAWING NO.	PART NO.	DESCRIPTION	QUANTITY/VARIATION	REF DESIGNATION
	D-CS-M8934-0-1		CIRCUIT SCHEMATIC	REF	
	D-UA-M8934-0-0		UNIT ASSEMBLY	REF	
	B-DD-M8934-0		DWG DIRECTORY	REF	
1	D-MD-5012400-0-0	5012400	ETCHED CIRCUIT BOARD	1	
2		10-00016-00	CAP 100PF 100V	1	C63
3		10-00018-00	CAP 120PF 100V	1	C62
4		10-00026-00	CAP 680PF 100V	1	C64
5		10-01610-01	CAP .01UF 100V DISC	61	C1 thru C61
6		10-05306-00	CAP 6.8UF 35V 10%	5	C65 thru C69
7		13-00229-00	RES 100 ¼W 5%	1	R3
8		13-00271-00	RES 220 ¼W 5%	1	R5
9		13-00295-00	RES 330 ¼W 5%	1	R7
10		13-00365-00	RES 1K ¼W 5%	3	R1,R2,R8
11		13-00479-00	RES 10K ¼W 5%	1	R4
12		13-01874-00	RES 5.6K ¼W 5%	1	R6
13		19-05547-00	I.C. DEC 7474	8	E5,E14,E15,E16,E27,E29,E44,E31
14		19-05575-00	I.C. DEC 7400	6	E12,E19,E22,E42,E45,E47
15		19-05576-00	I.C. DEC 7410	2	E8,E18
16		19-05577-00	I.C. DEC 7420	1	E24

E.C.O. NO.

"THIS DRAWING AND SPECIFICATIONS, HEREIN, ARE THE PROPERTY OF DIGITAL EQUIPMENT CORPORATION AND SHALL NOT BE REPRODUCED OR COPIED OR USED IN WHOLE OR IN PART AS THE BASIS FOR THE MANUFACTURE OR SALE OF ITEMS WITHOUT WRITTEN PERMISSION COPYRIGHT © 1976 . DIGITAL EQUIPMENT CORPORATION"

TITLE: TAPE CONTROL NRZ1

ASSY NO. D-UA-M8934-0-0

SHEET 1 OF 3

SIZE	CODE	NUMBER	REV.
B	PL	M8934-0-0	A

INSERTION PARTS LIST DATA BASE REV A

EN-[illegible]140A-16-R276(325) DRB 125

DIGITAL EQUIPMENT CORPORATION

PARTS LIST

MADE BY Steve Marlow
DATE Sept 1, 1976
ENG John P. Flaherty
DATE

CHECKED D. Bouman
DATE 16 Nov 76
PROD G. Dillard
DATE 17 DEC 76

SECTION 1
ISSUED SECTION 1

NOTES:
USED ON OPTION/MODEL
TM03

ITEM NO.	DRAWING NO.	PART NO.	DESCRIPTION	QUANTITY/VARIATION	REF DESIGNATION
17		19-05578-00	I.C. DEC 7430	1	E56
18		19-05590-00	I.C. DEC 7401	1	E57
19		19-09004-00	I.C. DEC 7402	6	E11,E23,E32,E33,E53,E59
20		19-09686-00	I.C. DEC 7404	2	E30,E48
21		19-09930-00	I.C. DEC 7405	3	E21,E37,E36
22		19-10011-00	I.C. DEC 7486	4	E43,E52,E54,E58
23		19-10035-00	I.C. DEC 74197	2	E20,E35
24		19-10046-00	I.C. DEC 7442	1	E55
25		19-10155-00	I.C. DEC 7408	6	E10,E17,E25,E26,E34,E49.
26		19-10436-00	I.C. DEC 74123	1	E39
27		19-10650-00	I.C. DEC 74161	2	E7,E50
28		19-10655-00	I.C. DEC 74157	2	E1,E2
29		19-10878-00	I.C. DEC 7427	1	E13
30		19-11521-00	I.C. DEC 7432	1	E28
31		19-13750-00	I.C. MC 8500	2	E3,E6
32		19-13751-00	I.C. MC 8501	1	E4
33		19-13749-00	I.C. MC 8502	1	E38
34		90-06732-00	EYELET	8	
35		90-08337-06	HANDLE, FLIP CHIP, MAGNETA	4	

E.C.O. NO.

THIS D... SPECIFICATIONS. HEREIN. ARE THE PROPERTY OF DIGITAL EQUIPMENT CORP... D SHALL NOT BE REPRO... ED OR COPIED OR USED IN WHOLE OR IN PART ... S FOR THE MANUFACTUR... OR SALE OF ITEMS WITHOUT WRITTEN PERM... COPYRIGHT © 197... . DIGITAL EQUIPMENT CORPORATION"

DRB 125

TITLE: TAPE CONTROL NRZ1

ASSY NO. D-UA-M8934-0-0
SHEET 2 OF 3

SIZE B | CODE PL | NUMBER M8934-0-0 | REV. A

INSERTION PARTS LIST DATA BASE REV A

DIGITAL EQUIPMENT CORPORATION

PARTS LIST

MADE BY Steve Marlow	CHECKED D. Bouman	SECTION 1
DATE Sept. 10, 1976	DATE 16 Nov 76	
ENG	PROD M. Dillard	ISSUED SECTION 1
DATE	DATE 17 DEC 76	

NOTES:

USED ON OPTION/MODEL TM03

ITEM NO.	DRAWING NO.	PART NO.	DESCRIPTION	QUANTITY/VARIATION	REF DESIGNATION
36		90-09185-00	INSULATED JUMPERS	3	W1,W2,W3
37		19-10651-00	I.C. 74175	1	E46
38		19-10652-00	I.C. 74174	1	E41
39		19-10724-00	I.C. 74180	1	E51
40		9105740-55	WIRE, #30 AWG, GRN	AR	

C.O. NO.

THIS DRAWING AND SPECIFICATIONS, HEREIN ARE THE PROPERTY OF DIGITAL EQUIPMENT CORPORATION AND SHALL NOT BE REPRODUCED OR COPIED OR USED IN WHOLE OR IN PART AS THE BASIS FOR THE MANUFACTURE OR SALE OF ITEMS WITHOUT WRITTEN PERMISSION. COPYRIGHT © 1976 . DIGITAL EQUIPMENT CORPORATION"

ENGR 3251 DRB 125

TITLE: TAPE CONTROL NRZ1	ASSY NO. D-UA-M8934-0-0	SIZE B	CODE FL	NUMBER M8934-0-0	REV. A
	SHEET 3 OF 3	INSERTION PARTS LIST DATA BASE REV A			

The drawing and specifications, herein, are the property of Digital Equipment Corporation and are not to be reproduced, or copied or used in whole or in part, as the basis for the manufacture or sale of items without written permission.

COPYRIGHT © 1975 DIGITAL EQUIPMENT CORPORATION

NOTES:

* FOR M8905, E13 IS A SPARE LOCATION.
FOR M8905YA, E13 IS A 7474 IC.

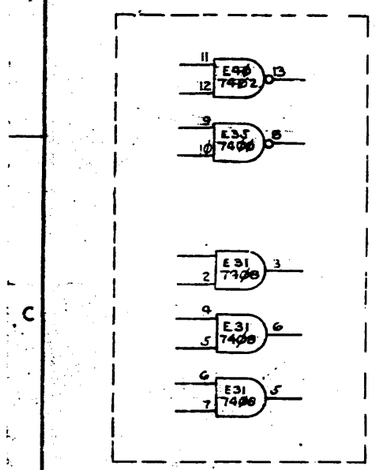

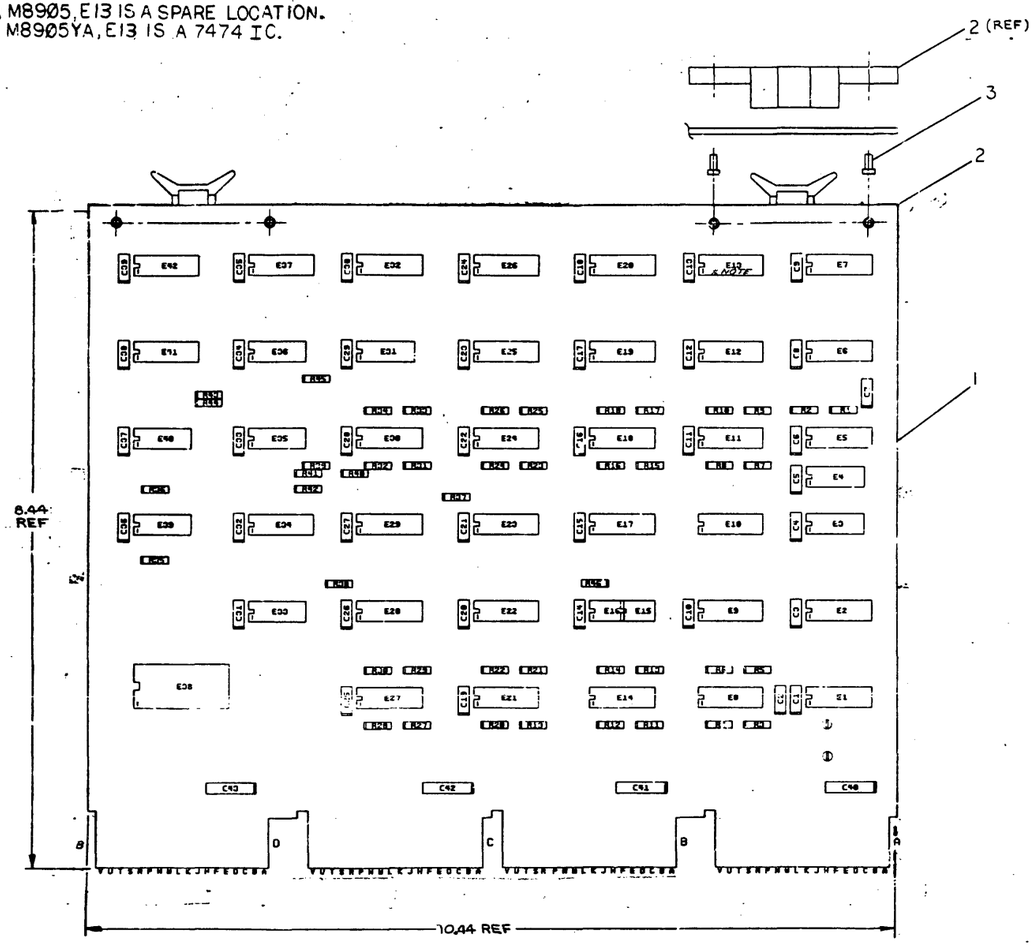

REF	REF	REF		X-Y COORDINATE HOLE LOCATION	K-CO-M8905-0-4	REF
REF	REF	REF		ASSY/DRILLING HOLE LAYOUT	D-AH-M8905-0-5	REF
REF	REF	REF		MODULE ECO HISTORY	B-MH-M8905-0-6	REF
1	1	1		ETCHED CIRCUIT BOARD	5010686	1
4	4	4		HANDLE, FLIP CHIP	9008337-6	2
8	8	8		EYELET	9006732	3
39	39	39	C1 THRU C39	CAP .01UF 100V 20% DISC	1001610-01	4
4	4	4	C40 THRU C43	CAP 6.8UF 35V 10% TANT	1005306	5
44	44	44	R3 THRU R46	RES 2K 1/4W 5%	1302388	6
1	1	1	R1	RES 330Ω 1/4W 5%	1300295	7
1	1	1	R2	RES 220Ω 1/4W 5%	1300271	8
1	1	1	E38	IC DEC 74154	1909701	9
5	5	5	E10, E17, E23, E29, E34	IC DEC 74153	1909937	10
1	1	1	E40	IC DEC 7402	1909004	11
1	1	1	E35	IC DEC 7400	1905575	12
3	3	3	E4, E33, E36	IC DEC 7404	1909686	13
4	4	4	E9, E12, E25, E28	IC DEC 74174	1910652	14
1	1	1	E3	IC DEC 7474	1905547	15
6	6	6	E5, E6, E7, E37, E42, E41	IC DEC 74157	1910655	16
4	4	4	E8, E14, E21, E27	IC DEC 74173	1911330	17
2	2	2	E15, E16	IC DEC 75452	1910645-1	18
4	4	4	E19, E20, E26, E32	IC DEC 74175	1910651	19
7	7	7	E1, E2, E11, E18, E22, E24, E30	IC DEC 8234	1911315	20
1	1	1	E39	IC DEC 7401	1905590	21
1	1	1	E31	IC DEC 7408	1910155	22
-	1	-	E13	IC DEC 7474	1905547	23
A/R	A/R	A/R		WIRE #30 AWG GREEN	9105740-55	24
2	2	2		SPLIT LUG	9006735	25
-	1	1	W1	JUMPER, INSULATED	9009185	26
QTY M8905YB	QTY M8905YA	QTY M8905	REF DESIGNATION	DESCRIPTION	PART NO.	ITEM NO.

8234	8	16
74175	8	16
75452	4	8
74174	8	16
74157	8	16
74173	8	16
74153	8	16
74154	12	24
IC TYPE	GND	+5V

GND AND 5V ARE USUALLY PIN 7 AND 14 RESPECTIVELY EXCEPTIONS ARE STATED ABOVE

IC PIN LOCATIONS

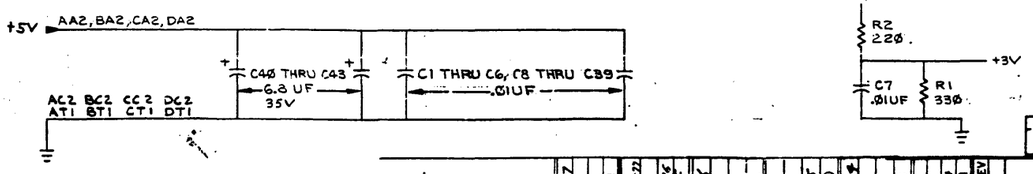

DEC NO.	EIA NO.	CHANGE NO.	REV
		M8905-000004	E
		M8905-000003	D
		M8905-000002	C
		M8905-000001	B

REVISIONS

SEMICONDUCTOR CONVERSION CHART

FIRST USED ON OPTION MODEL: TU56

PARTS LIST

ETCH BOARD XEV D

DRN		DATE	9/24/75
CHK'D		DATE	11/7/75
ENG		DATE	11/7/75
PROJ. ENG.		DATE	11/12/75
PROD.		DATE	1-7-76

NEXT HIGHER ASSY

SCALE

SHEET 1 OF 6

digital EQUIPMENT CORPORATION MAYNARD, MASSACHUSETTS

TITLE: MAINTENANCE REGISTER

SIZE D | CODE CS | NUMBER M8905-0-1 | REV. H

DIST.

DEC FORM NO. DRD 126A

"THIS DRAWING AND SPECIFICATIONS, HEREIN, ARE THE PROPERTY OF DIGITAL EQUIPMENT CORPORATION AND SHALL NOT BE REPRODUCED OR COPIED OR USED IN WHOLE OR IN PART AS THE BASIS FOR THE MANUFACTURE OR SALE OF ITEMS WITHOUT WRITTEN PERMISSION.
COPYRIGHT © 1975, DIGITAL EQUIPMENT CORPORATION"

MAINTENANCE REGISTER MULTIPLEXERS BITS 8-11

MAINTENANCE REGISTER BITS 8-11

RDC MUX BITS 0-3

DCS M8905-0-1

+5V R37 2K

DS5 & CNRZ3: RDB Φ L — CE2 — 7404 E4

MR2 RDB Φ H

MR4 C8 — BR2
BF4 WDBFO Φ(1) H — BB1
TCCM2 WDWBO Φ(1) H

74153 E10: D0 C0 B0 A0 S1 S0 STB0 → F0

+5V R38 2K

DS5 & CNRZ3 RDB 1 L — CP2 — 7404 F4

MR2 RDB 1 H

MR4 C9 — BP2
BF4 WDBFO 1(1)H — BE1
TCCM2 WDWBO 1(1)H

74153 E10: D1 C1 B1 A1 S1 S0 STB1 → F1

74174 E12: D0 R0(1) D1 R1(1) CLR CLK
MR2 MAINT 8(1)H
MR2 MAINT 9(1)H

74157 E6: B0 A0 B1 A1 STB S0 → F0 F1
BR1 — MR2 RDC Φ H
BP1 — MR2 RDC 1 H

+5V R39 2K

DS3 & CNRZ3 RDB 2 L — CD2 — 7404 E4

MR2 RDB 2 H

MR4 C10 — BN2
BF4 WDBFO 2(1) H — BH2
TCCM2 WDWBO 2(1) H

74153 E17: D0 C0 B0 A0 S1 S0 STB0 → F0

+5V R40 2k

DS7 & CNRZ3 RDB 3 L — CV — 7404 E4

MR2 RDB 3H

MR4 C11 — BM2
BF4 WDBFO 3(1)H — BJ2
TCCM2 WDWBO 3(1)H

74153 E17: D1 C1 B1 A1 S1 S0 STB1 → F1

MR5 WRP 2 OR 3 H
MR5 WRP 1 OR 3 H

74174 E12: D2 R2(1) D3 R3(1) CLR CLK
MR2 MAINT 10(1)H
MR2 MAINT 11(1)H

74157 E6: B3 A3 B2 A2 STB S0 → F3 F2
BN1 — MR2 RDC 2 H
BM1 — MR2 RDC 3 H

MR5 WRP 3 L

MBI4 MASCLR L
MR5 DATA CLK H

REVISIONS		
CHK	CHANGE NO.	REV.

TITLE	SIZE	CODE	NUMBER	REV.
MAINTENANCE REGISTER (MR2)	D	CS	M8905-0-1	H1
SCALE —	SHEET 2 OF 6	DIST.		

DEC FORM NO. DRD 138

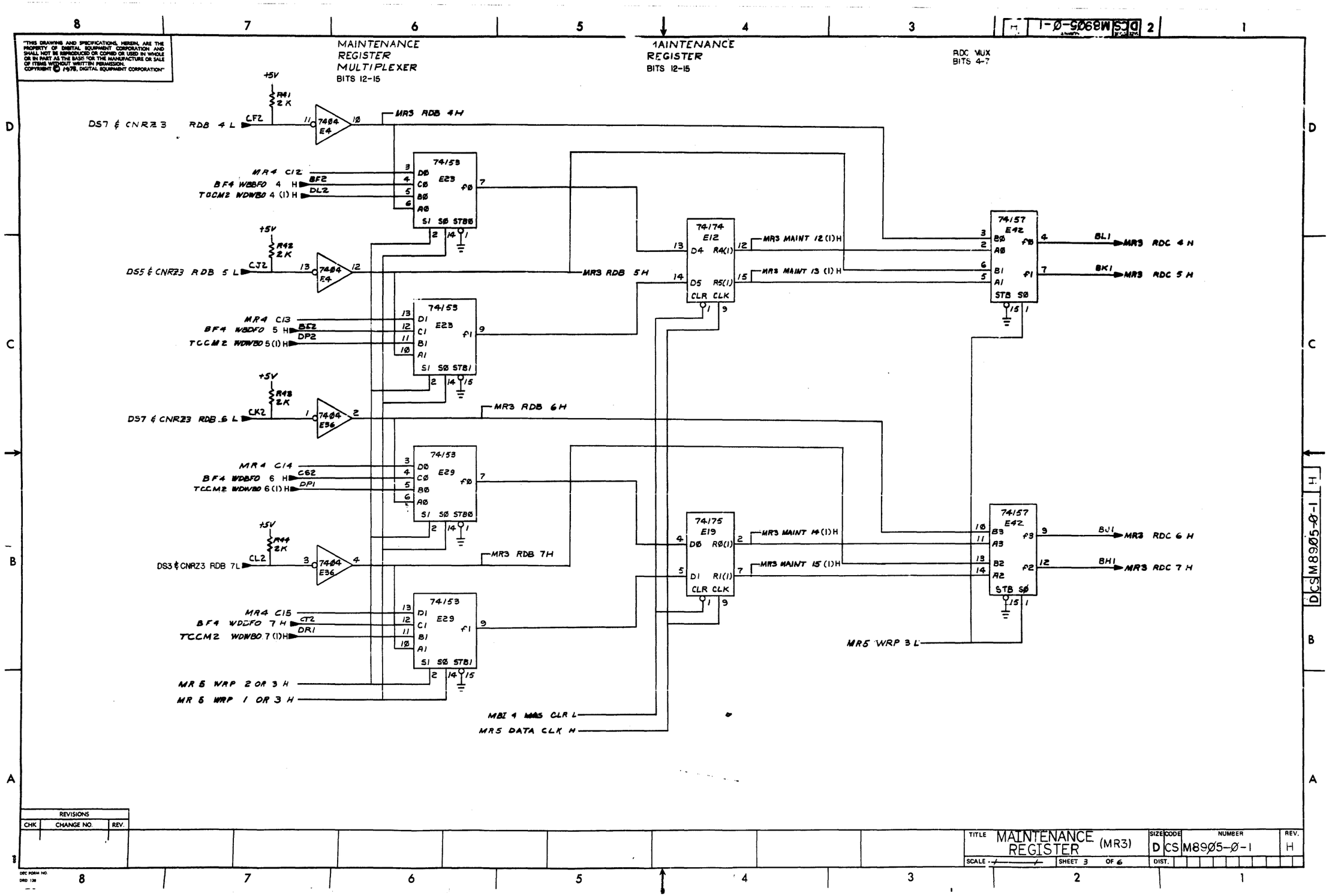

"THIS DRAWING AND SPECIFICATIONS, HEREIN, ARE THE PROPERTY OF DIGITAL EQUIPMENT CORPORATION AND SHALL NOT BE REPRODUCED OR COPIED OR USED IN WHOLE OR IN PART AS THE BASIS FOR THE MANUFACTURE OR SALE OF ITEMS WITHOUT WRITTEN PERMISSION. COPYRIGHT © 1978, DIGITAL EQUIPMENT CORPORATION"

REVISIONS		
CHK	CHANGE NO.	REV.

TITLE	SIZE	CODE	NUMBER	REV.
MAINTENANCE REGISTER (MR3)	D	CS	M8905-0-1	H
SCALE	SHEET 3 OF 6	DIST.		

DCS M8905-0-1 H

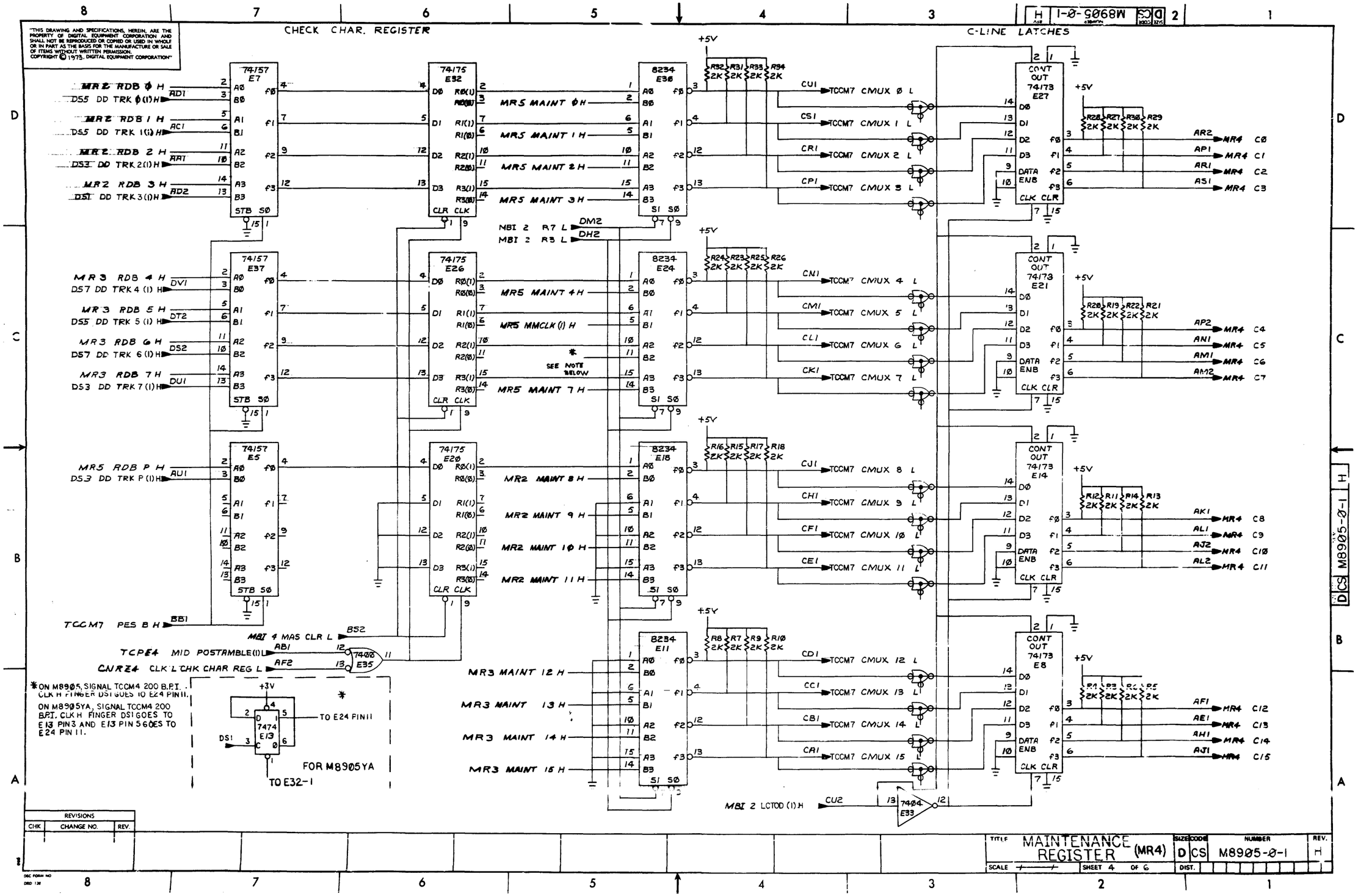

"THIS DRAWING AND SPECIFICATIONS, HEREIN, ARE THE PROPERTY OF DIGITAL EQUIPMENT CORPORATION AND SHALL NOT BE REPRODUCED OR COPIED OR USED IN WHOLE OR IN PART AS THE BASIS FOR THE MANUFACTURE OR SALE OF ITEMS WITHOUT WRITTEN PERMISSION. COPYRIGHT © 1973, DIGITAL EQUIPMENT CORPORATION"

REVISIONS		
CHK	CHANGE NO.	REV.

TITLE	SIZE	CODE	NUMBER	REV.
MAINTENANCE REGISTER (MR4)	D	CS	M8905-Ø-1	H
SCALE	SHEET 4 OF 6		DIST.	

DEC FORM NO DRD 138

"THIS DRAWING AND SPECIFICATIONS, HEREIN, ARE THE PROPERTY OF DIGITAL EQUIPMENT CORPORATION AND SHALL NOT BE REPRODUCED OR COPIED OR USED IN WHOLE OR IN PART AS THE BASIS FOR THE MANUFACTURE OR SALE OF ITEMS WITHOUT WRITTEN PERMISSION.
COPYRIGHT © 1975, DIGITAL EQUIPMENT CORPORATION"

MAINTENANCE REGISTER BITS 0-7

+5V R45 2K

DS3 & CNRZ3 RDB P L — CH2 — 7404 E36 — MR5 RDB P H

MBI5 GO BUF H — AK2 — 7408 E31

MR4 C7
TCCM2 XWD P H — DE1
TCCM2 WDWBO P(1)H — DD1

74153 E34 — D0 C0 B0 A0 — S1 S0 ST86 — f0

74153 E34 — D1 C1 B1 A1 — S1 S0 ST81 — f1

MR 5 RDS H — BU1

MR4 C4
MR4 C3
MR4 C2
MR4 C1
MR4 C0

74174 E25 — D1 D2 D3 D4 D0 — R1(1) R2(1) R3(1) R4(1) R0(0) — CLR CLK

MR5 MAINT 4 (1) H
MR5 MAINT 3 (1) H
MR5 MAINT 2 (1) H
MR5 MAINT 1 (1) H
DR2 — MR5 MAINT 0 (1) H

74175 E19 — D3 D2 — R3(1) R3(0) R2(1) R2(0) — CLR CLK

MR5 MAINT 7 (1) H

MR5 MMCLK (1) H — BC1

MR5 WRP 3 L — 7400 E35
MR5 WRP 2 L — 7400 E35 — MR5 WRP 2 OR 3 H
MR5 WRP 1 L — 7400 E35 — MR5 WRP 1 OR 3 H

MBI4 MAS CLR L — BS2

MBI2 R3 L — DH2
MBI2 REG WRT L — DJ2 — 7402 E40 — 7404 E36

MBI2 R11 L — DK1 — 7402 E40 — MR5 WRT R11 H

MR5 DATA CLK H

7402 E40 — 10

74157 E41 — B0 A0 B1 A1 — ST8 S0 — AE2 MR5 RDC P H

MR5 WRP 3 L — BB2
MR5 INC PREAMBLE L — DF1
MR5 MM EOR CLR L — DH1

74154 E38 — f15 f14 f13 f12 f11 f10 f09 f08 f07 f06 f05 f04 f03 f02 f01 f00 — ST81 ST80

MR5 IICC L — DM1
MR5 DISABLE OCC RCVR L — DJ1
MR5 WRP 3 L — DV2
MR5 WRP 2 L — DU2
MR5 WRP 1 L — DN2
MR5 WRP 0 L — DN1

+5V R36 2K

7401 E39 — CV2 — MR5 RDS + MAINT RDS L *

7404 E33 — BU1 — MR5 RDS H

DL1 — MR5 INC TMK L

7404 E33 — 7401 E39 — DE2 — MR5 BIT STRB 2 H

+5V R35 2K

7401 E39 — 7401 E39 — DF2 — MR5 BIT STRB 1 H

7404 E33 — DB2 — MR5 EVEN PAR H

7404 E33 — DD2 — MR5 IRD H

E31/7408 — BS1 — MR5 WRP 0 + WRP 4 L

* NOTE
SIGNAL MR5 RDS + MAINT RDS L
FOR TM02'S FINGER CV2 IS MR5 RDS L
FOR TM03'S FINGER CV2 IS MR5 MAINT RDS L.

REVISIONS		
CHK	CHANGE NO.	REV

TITLE	SIZE	CODE	NUMBER	REV
MAINTENANCE REGISTER (MR5)	D	CS	M8905-0-1	H
SCALE	SHEET 5 OF 6	DIST.		

DEC FORM NO. DRD 138

"THIS DRAWING AND SPECIFICATIONS, HEREIN, ARE THE PROPERTY OF DIGITAL EQUIPMENT CORPORATION AND SHALL NOT BE REPRODUCED OR COPIED OR USED IN WHOLE OR IN PART AS THE BASIS FOR THE MANUFACTURE OR SALE OF ITEMS WITHOUT WRITTEN PERMISSION.
COPYRIGHT © 1979, DIGITAL EQUIPMENT CORPORATION"

TAPE CONTROL REGISTER

MRG SS2 (SB) L
MRG SS1 (SB) L
MRG SS0 (1) H
MRG PVN (1) H
MRG DEN 0 (SB) H
MRG FMT 0 (1) H
MRG FMT 1 (1) H
MRG FMT 2 (1) H
MRG ZERO FILL (1) H
MRG DEN 1 (Φ) H
MRG FMT 3 (1) H
MRG DEN 2 L
MRG DEN 2 (1) H
MRG EAODTE (1) H
MRG TCW(Ø)H + CWD3 SAC L
REMOVE JUMPER FOR TMØ3 W1
MRG CMUX Ø L
MRG CMUX 1 L
MRG CMUX 2 L
MRG CMUX 3 L
MRG CMUX 4 L
MRG CMUX 5 L
MRG CMUX 6 L
MRG CMUX 11 L
MRG CMUX 7 L
MRG CMUX 8 L
MRG CMUX 9 L
MRG CMUX 13 L

*NOTE
FOR TMØ2'S FINGER AH2 IS MRG TCW(Ø)H, FOR TMØ3'S FINGER AH2 IS CWD3 SAC L.

REVISIONS		
CHK	CHANGE NO.	REV

TITLE	SIZE	CODE	NUMBER	REV.
MAINTENANCE REGISTER (MR6)	D	CS	M8905-0-1	H
SCALE — SHEET 6 OF 6	DIST.			

This drawing and specifications, herein, are the property of Digital Equipment Corporation and shall not be reproduced or copied or used in whole or in part as the basis for the manufacture or sale of items without written permission.

COPYRIGHT © 1973, DIGITAL EQUIPMENT CORPORATION

NOTES:

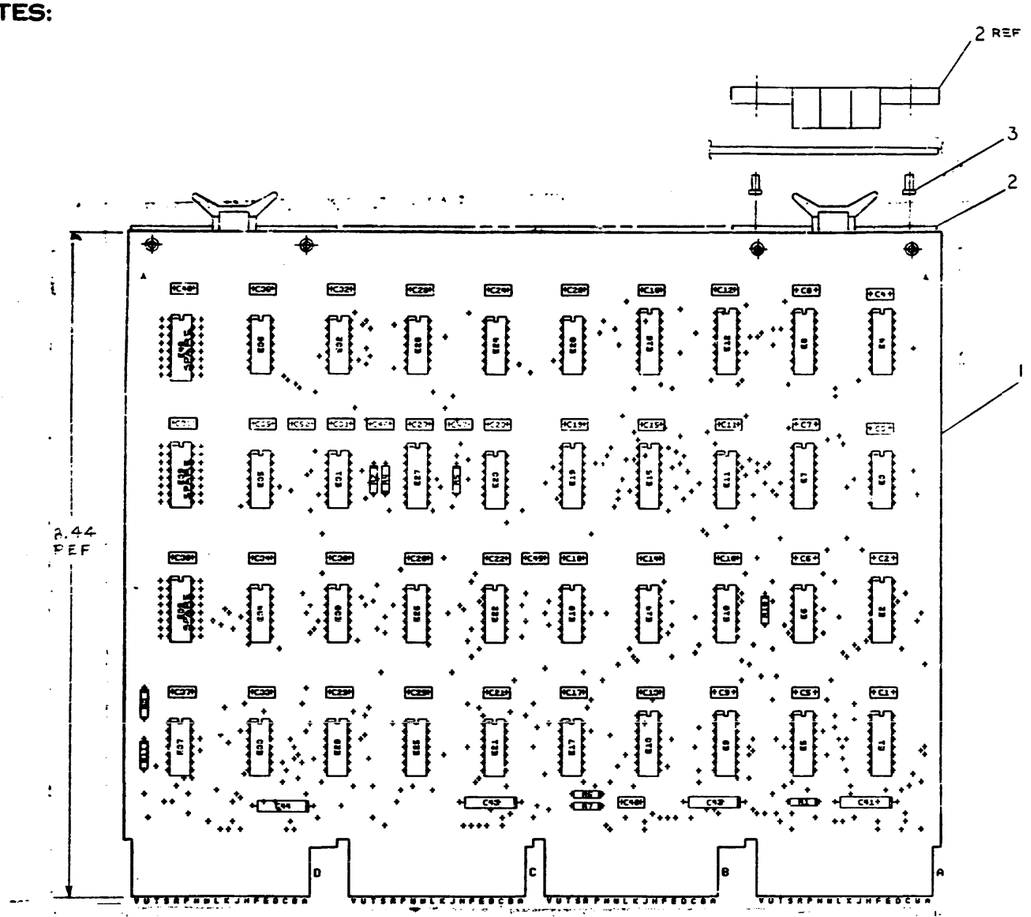

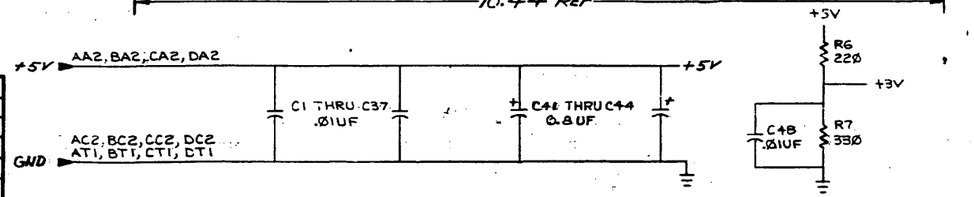

REF		X/Y COORDINATE HOLE LOCATION	K-CO-M8906-0-4	REF
REF		ASSY/DRILLING HOLE LAYOUT	D-AH-M8906-0-5	REF
REF		MODULE ECO HISTORY	B-M-M8906-0-6	REF
1		ETCHED CIRCUIT BOARD	5010675	1
4		HANDLE, FLIP CHIP-MAGENTA	9008337-06	2
8		EYELET	9006732	3
38	C1 THRU C36, C37, C48	CAP. .01UF 100V 20% DISC	1001610-01	4
4	C41 THRU C44	CAP. 6.8UF 35V 10% TANT	1005306	5
				6
1	C47	CAP. 150PF 100V 5% DM	1000019	7
1	C50	CAP. 470PF 100V 5% DM	1000024	8
1	C45	CAP. 680PF 100V 5% DM	1000026	9
1	R3	RES 150 1/4W 5%	1300250	10
1	R6	RES 220 1/4W 5%	1300271	11
1	R7	RES 330 1/4W 5%	1300295	12
1	R2	RES 100 1/4W 5%	1300229	13
1	R1	RES 1K 1/4W 5%	1300365	14
2	R10, R11	RES 470 1/4W 5%	1300316	15
1	R4	RES 5.6K 1/4W 5%	1301874	16
1	R5	RES 22K 1/4W 5%	1302391	17
3	E4, E7, E8	IC 74174	1910652	18
4	E1, E2, E5, E9	IC 74175	1910651	19
2	E12, E16	IC 74153	1909937	20
2	E13, E15	IC 74157	1910655	21
2	E3, E11	IC 4008	1910270	22
1	E19	IC 7442	1910046	23
1	E27	IC 74123	1910436	24
2	E28, E34	IC 7400	1905575	25
2	E21, E36	IC 7402	1909004	26
3	E20, E29, E31	IC 7404	1909686	27
3	E23, E25, E37	IC 7408	1910155	28
1	E24	IC 7410	1905576	29
1	E26	IC 74H11	1909267	30
2	E6, E14	IC 7427	1910878	31
2	E10, E35	IC 7486	1910011	32
3	E18, E22, E30	IC 7474	1905547	33
1	E32	IC 74H74	1909667	34
1	C46	CAP. 56PF 100V 5% DM	1000012	35
2	E17, E33	IC 74160	1910724	36
A/R		WIRE #30 AWG	9105740-55	37
				38

QTY	REF DESIGNATION	DESCRIPTION	PART NO.	ITEM NO.

PARTS LIST

74123	8	16
74174	8	16
74153	8	16
74157	8	16
74175	8	16
7442	8	16
IC TYPE	GND	+5V

GND AND 5V ARE USUALLY PIN 7 AND 14 RESPECTIVELY EXCEPTIONS ARE STATED ABOVE

IC PIN LOCATIONS

FIRST USED ON OPTION MODEL: TU16

ETCH BOARD REV: E

DEC NO.	EIA NO.	DEC NO.	EIA NO.

SEMICONDUCTOR CONVERSION CHART

CHK	CHANGE NO.	REV
J. VAGIAS	M8906-00001	B
J. HESS	M8906-00003	C
J. VAGIAS	M8906-00004	D

REVISIONS

DRN. DATE 9/4/73
CHK'D. DATE 1/14/74
ENG. DATE 1-14-74
PROJ. ENG. DATE 1-14-74
PROD. DATE 1-14-74

NEXT HIGHER ASSY

SCALE
SHEET 1 OF 5

digital EQUIPMENT CORPORATION
MAYNARD, MASSACHUSETTS

TITLE (BF1)
16 BIT-
BIT FIDDLER

SIZE D | CODE CS | NUMBER M8906-0-1 | REV. D

DIST.

DEC FORM NO. DRD-1354

"THIS DRAWING AND SPECIFICATIONS, HEREIN, ARE THE PROPERTY OF DIGITAL EQUIPMENT CORPORATION AND SHALL NOT BE REPRODUCED OR COPIED OR USED IN WHOLE OR IN PART AS THE BASIS FOR THE MANUFACTURE OR SALE OF ITEMS WITHOUT WRITTEN PERMISSION.
COPYRIGHT © 1973, DIGITAL EQUIPMENT CORPORATION"

BF2 P BF RUN (1) H
MBI 9 BF ENABLE H
TCCM 3 AFMD(1) H
+3V
BF 2 SCLK(1) L
TCCM 3 READING L
MBI 5 FWD H
MBI 5 WRITE L
TCCM 4 WRT STRB H
MRG RDS H
+5V
R4 5.6K
C46 56 PF
R11 470
DU 2
CNRZ4 CHECK CHAR L
MBI 4 MAS CLR L
BF2 SLCT-A(Ø)H
BF2 SLCT-B(Ø)H
BF2 SLCT-B(1)H
BF3 15 MODE L
BF2 FCCLK H
BF2 DATA STRB H
BF2 SLCT-B(Ø) H
BF2 SLCT-A(1) H
BF3 CORE DUMP H
BF2 SLCT-B(1) H
BF3 15+ NORMAL L
BF3 15+NORMAL H
BF2P-BF RUN(1)H
R3 150Ω
C45 680 Pf
R5 20K
C47 150 PF
R2 100Ω
C50 470 Pf
DV2 BF2 ODD FRM (1) H
DL2 BF2 SCLK(1)L
DK2
DV1
CR2
AJ2
CPI
CBI
CR1
DU1
DU2
CDI BF2 CLK DH
CEI BF2 CLK CH
CHI BF2 CLK BH
CFI BF2 CLK AH
BF2 SLCT-A (Ø) H
BF2 SLCT-A (1) H
BF2 SLCT-B (1) H
BF2 SLCT-B (Ø) H
TCCM 4 WRT STRB H
DF1 BF2 SET DTE L
MBI 6 WRITE L
BF2 CLR ERROR L
MBI 9 BF ENABLE H
MB WCLK H
BR1
AC1
API
CS2
DS2
DK1
DL1
DV1
CR1
CPI
CBI
CDI
CEI
CHI
CFI
DF1
7404 E29
7408 E25
7402 E21
7474 E39
74123 E27
74H11 E26
7410 E24
7400 E28
7408 E23
7404 E31
7486 E35
7402 E36
7408 E37
7404 E20
7427 E6
7427 E14
7486 E10
7474 E18
74H74 E32
7400 E34
74123 E22
7404 E31

REVISIONS		
CHK	CHANGE NO	REV

TITLE	SIZE	CODE	NUMBER	REV.
16 BIT- BIT FIDDLER (BF2)	D	CS	M8906-0-1	6
SCALE —	SHEET 2 OF 5	DIST.		

"THIS DRAWING AND SPECIFICATIONS, HEREIN, ARE THE PROPERTY OF DIGITAL EQUIPMENT CORPORATION AND SHALL NOT BE REPRODUCED OR COPIED OR USED IN WHOLE OR IN PART AS THE BASIS FOR THE MANUFACTURE OR SALE OF ITEMS WITHOUT WRITTEN PERMISSION. COPYRIGHT © 1973, DIGITAL EQUIPMENT CORPORATION"

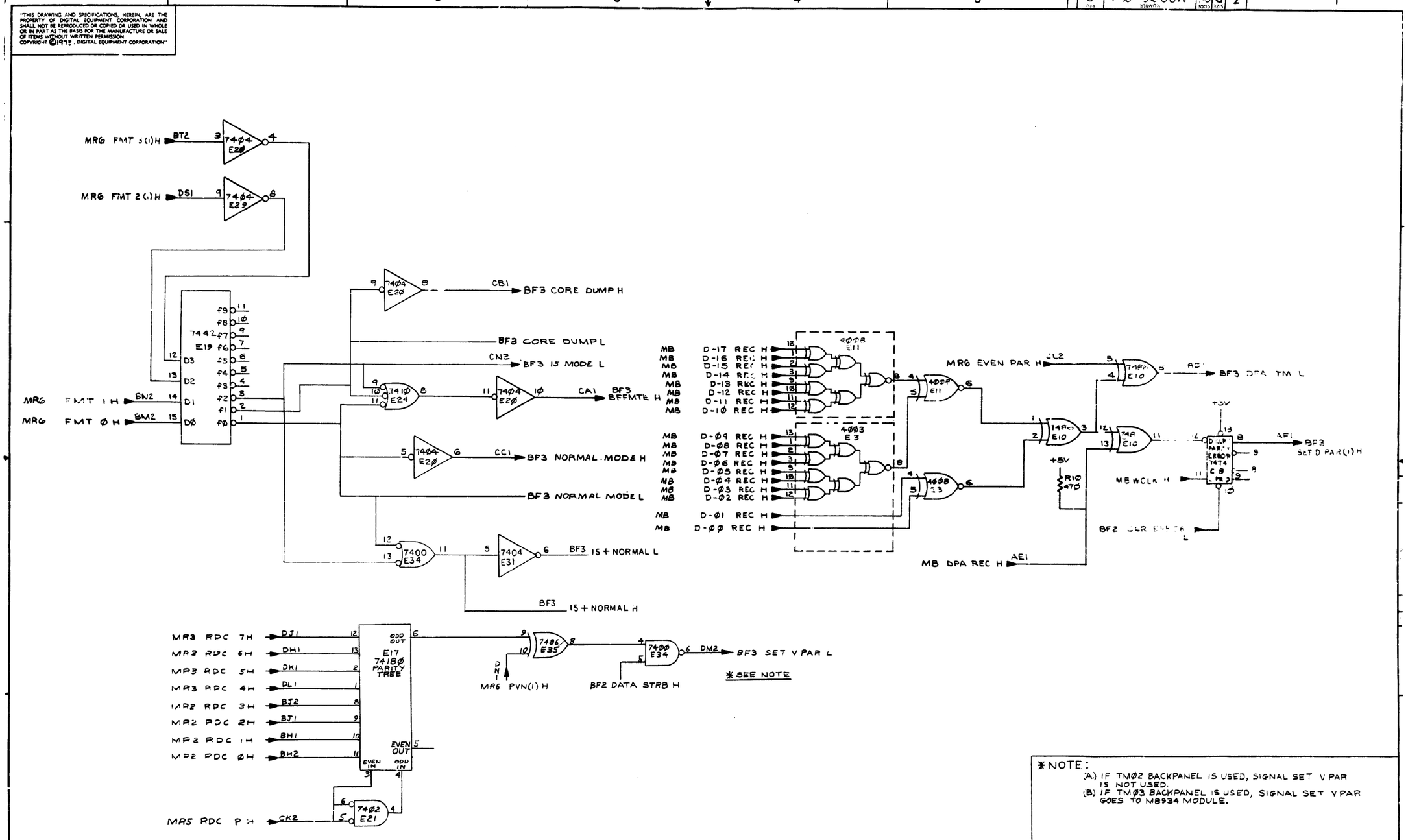

*NOTE:
(A) IF TMØ2 BACKPANEL IS USED, SIGNAL SET V PAR IS NOT USED.
(B) IF TMØ3 BACKPANEL IS USED, SIGNAL SET V PAR GOES TO M8934 MODULE.

REVISIONS		
CHK	CHANGE NO	REV

TITLE	SIZE	CODE	NUMBER	REV.
16 BIT - BIT FIDDLER (BF3)	D	CS	M89Ø6-Ø-1	D
SCALE	SHEET 3 OF 5		DIST.	

"THIS DRAWING AND SPECIFICATIONS, HEREIN, ARE THE PROPERTY OF DIGITAL EQUIPMENT CORPORATION AND SHALL NOT BE REPRODUCED OR COPIED OR USED IN WHOLE OR IN PART AS THE BASIS FOR THE MANUFACTURE OR SALE OF ITEMS WITHOUT WRITTEN PERMISSION. COPYRIGHT © 1973, DIGITAL EQUIPMENT CORPORATION"

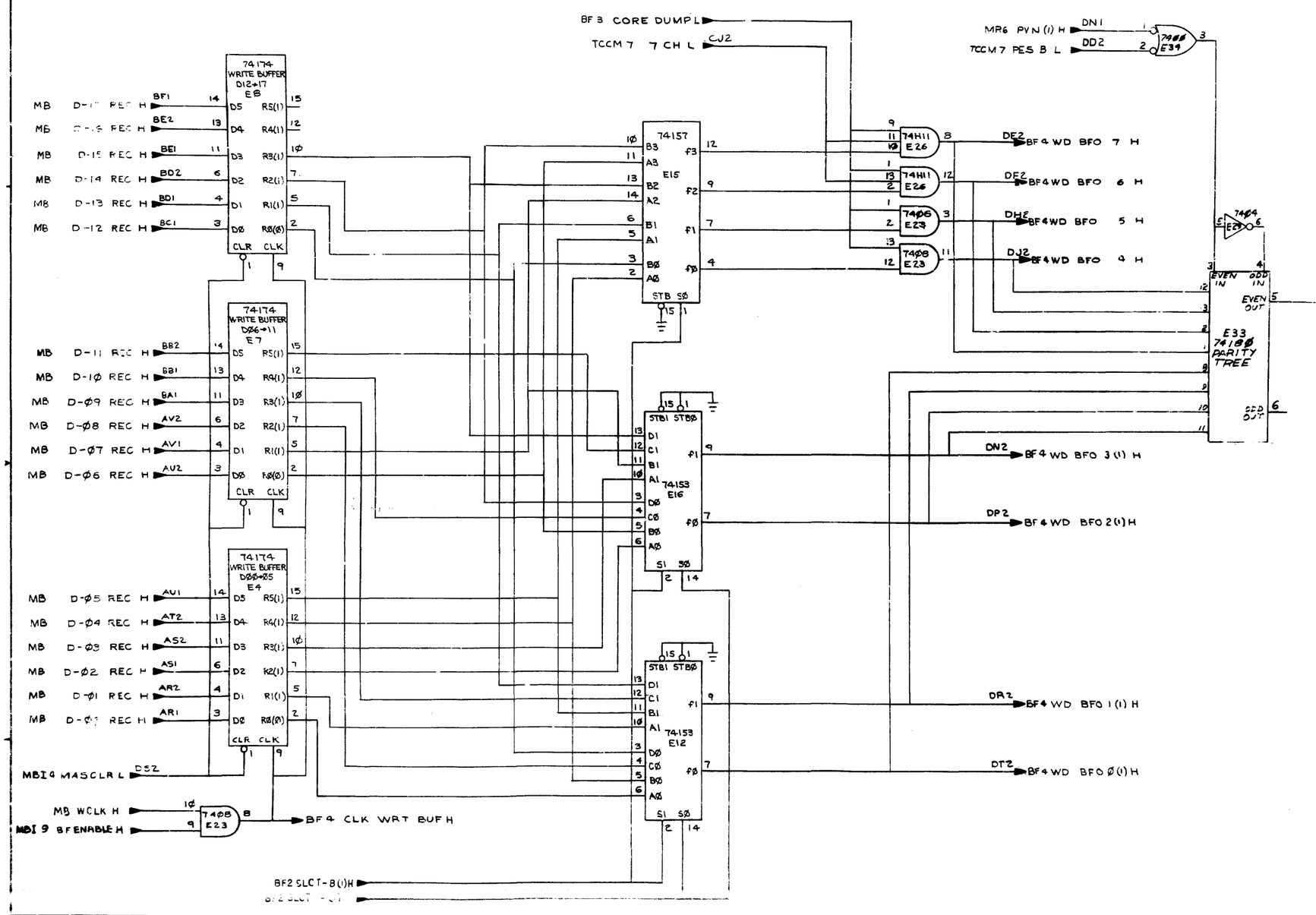

NOTE:
(A) IF TM02 BACKPANEL IS USED, SIGNAL WDBFO P IS NORMALLY UNUSED.
(B) IF TM03 BACKPANEL IS USED, SIGNAL WDBFO P GOES TO M8933 MODULE.

SLCT-B	SLCT-A	FUNCTION
0	0	11[(7+9 TRK·CD·1ST FRM)+(CD·1ST FRM)]
0	1	11[7+9TRK·CD·2ND FRM]
1	0	11[(7+9TRK·CD·2ND FRM)+(CD·3RD FRM)]
1	1	11[7+9TRK·CD·4TH FRM]

REVISIONS		
CHK	CHANGE NO.	REV

TITLE	SIZE	CODE	NUMBER	REV.
16 BIT- (BF4) BIT FIDDLER	D	CS	M8906-0-1	D
SCALE	SHEET 4 OF 5	DIST.		

"THIS DRAWING AND SPECIFICATIONS, HEREIN, ARE THE PROPERTY OF DIGITAL EQUIPMENT CORPORATION AND SHALL NOT BE REPRODUCED OR COPIED OR USED IN WHOLE OR IN PART AS THE BASIS FOR THE MANUFACTURE OR SALE OF ITEMS WITHOUT WRITTEN PERMISSION.
COPYRIGHT © 1973, DIGITAL EQUIPMENT CORPORATION"

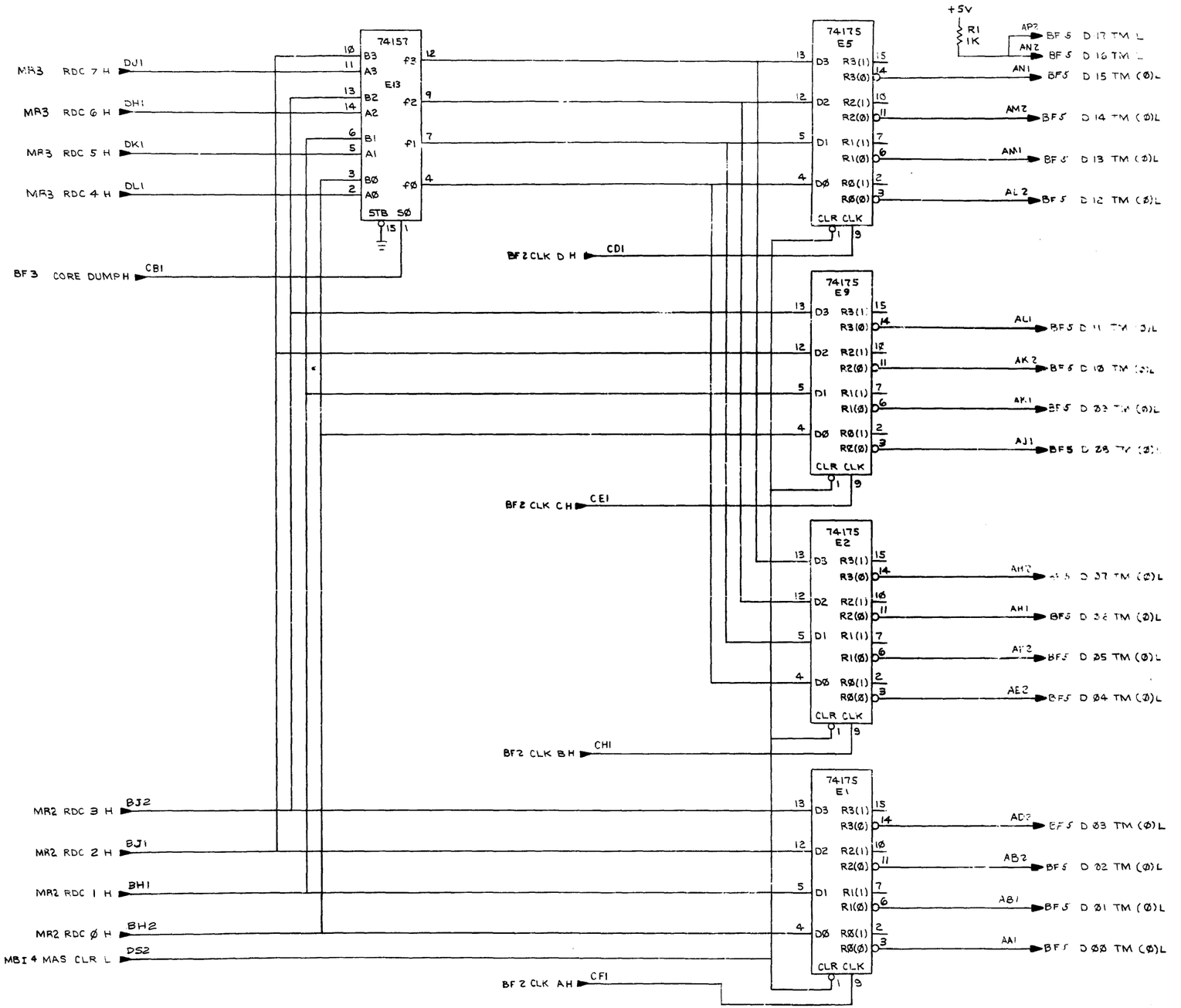

REVISIONS		
CHK	CHANGE NO	REV

TITLE		SIZE	CODE	NUMBER	REV.
16 BIT – (BF5) BIT FIDDLER		D	CS	M8926-Ø-1	D
SCALE	SHEET 5 OF 5	DIST.			

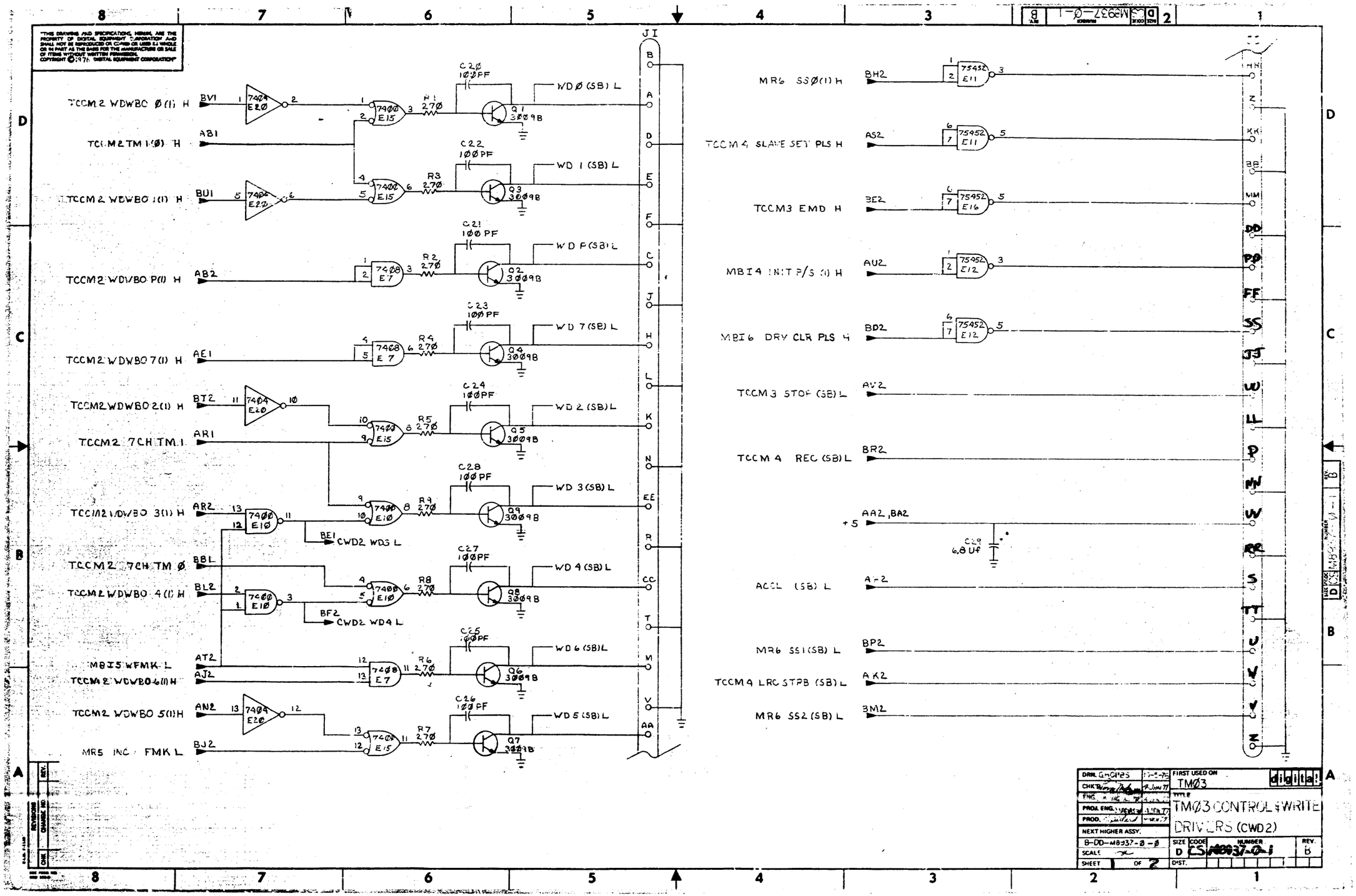

TCCM2 WDWBO Ø(1) H
TCCM2 TM1(Ø) H
TCCM2 WDWBO 1(1) H
TCCM2 WDWBO P(1) H
TCCM2 WDWBO 7(1) H
TCCM2 WDWBO 2(1) H
TCCM2 7CH TM1
TCCM2 WDWBO 3(1) H
TCCM2 7CH TM Ø
TCCM2 WDWBO 4(1) H
MBI5 WFMK L
TCCM2 WDWBO 6(1) H
TCCM2 WDWBO 5(1) H
MR5 INC FMK L
WDØ (SB) L
WD 1 (SB) L
WD P (SB) L
WD 7 (SB) L
WD 2 (SB) L
WD 3 (SB) L
WD 4 (SB) L
WD 6 (SB) L
WD 5 (SB) L
CWD2 WD3 L
CWD2 WD4 L
MR6 SSØ(1) H
TCCM4 SLAVE SET PLS H
TCCM3 EMD H
MBI4 INIT P/S (1) H
MBI6 DRV CLR PLS H
TCCM3 STOP (SB) L
TCCM4 REC (SB) L
ACCL (SB) L
MR6 SS1 (SB) L
TCCM4 LRC STPB (SB) L
MR6 SS2 (SB) L
+5
C29 6.8 UF
DRN. GHOPES
CHK.
ENG.
PROJ. ENG.
PROD.
NEXT HIGHER ASSY.
B-DD-M8937-Ø-Ø
SCALE
SHEET 1 OF 2
FIRST USED ON TMØ3
digital
TITLE TMØ3 CONTROL & WRITE DRIVERS (CWD2)
SIZE D
CODE CS
NUMBER M8937-Ø-1
REV. B
DIST.

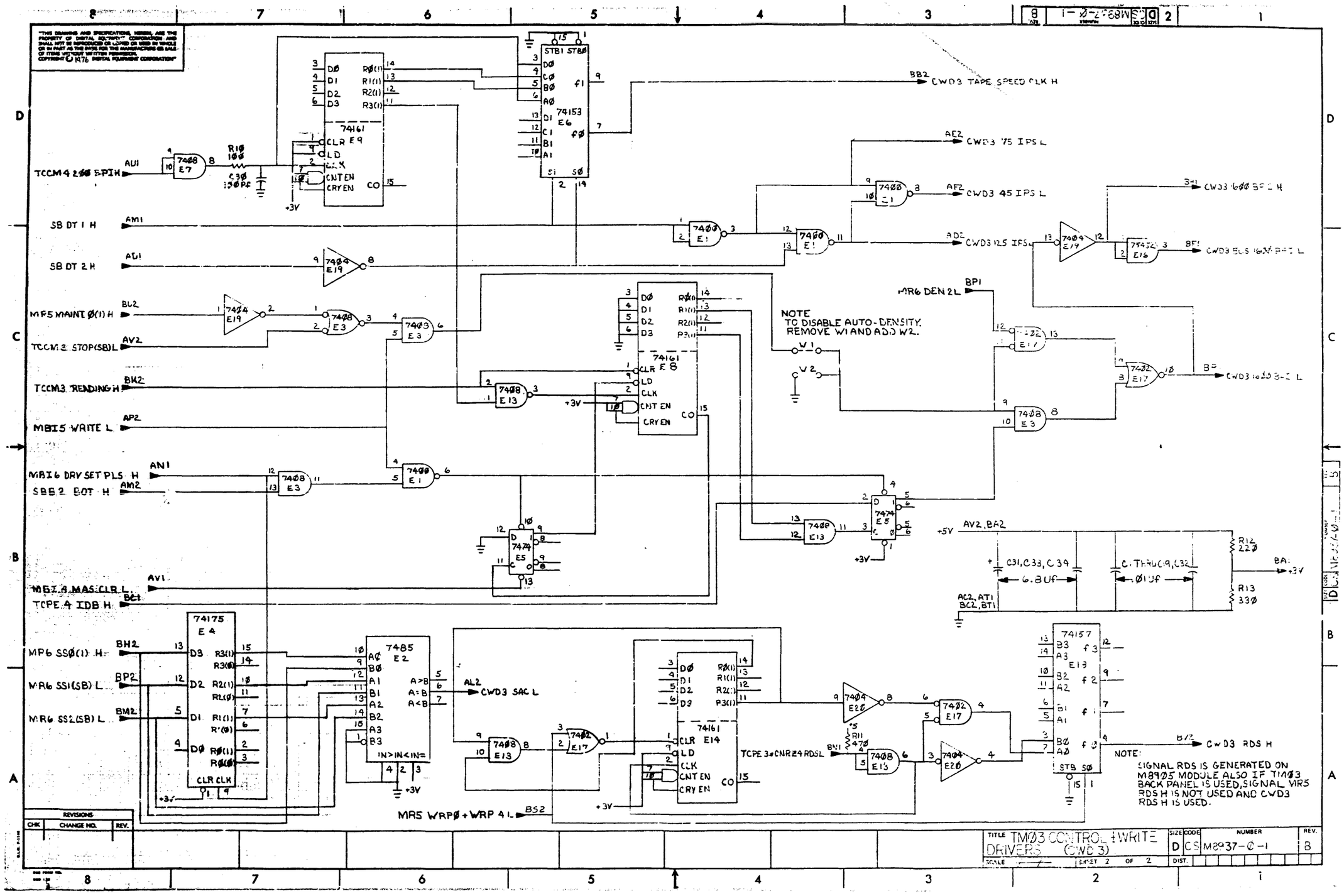

REVISIONS		
CHK	CHANGE NO.	REV.

TITLE TMØ3 CONTROL + WRITE DRIVERS (CWD 3)

SIZE D | CODE CS | NUMBER M8937-Ø-1 | REV. B

SCALE | SHEET 2 OF 2 | DIST.

THIS DRAWING AND SPECIFICATIONS, WHETHER PATENTABLE OR NOT, ARE THE PROPERTY OF DIGITAL EQUIPMENT CORPORATION AND SHALL NOT BE REPRODUCED OR COPIED OR USED IN WHOLE OR IN PART AS THE BASIS FOR THE MANUFACTURE OR SALE OF ITEMS WITHOUT WRITTEN PERMISSION.
COPYRIGHT © 1978 DIGITAL EQUIPMENT CORPORATION

COMPONENT SIDE VIEW

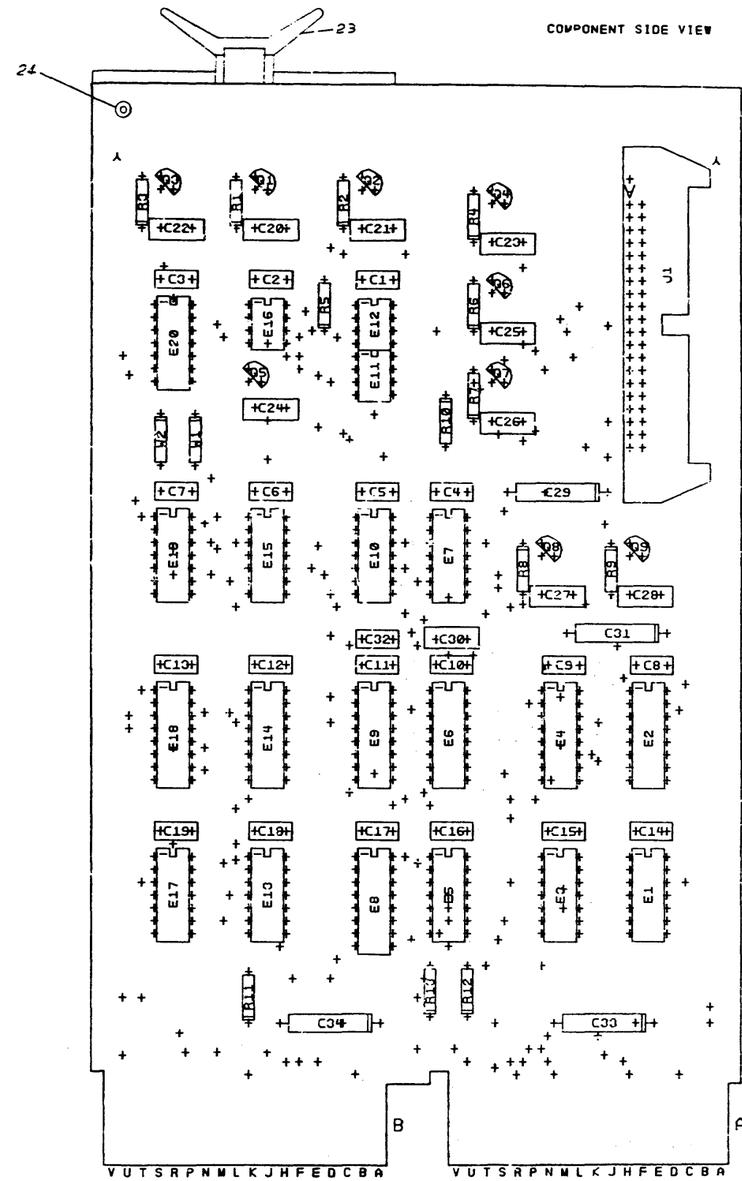

NOTES:

CH	CHANGE NO	REV

ETCH REV. 0
P.C. DESIGN DATA BASE REV. C1

SIGNATURES	DATE
DRN. [illegible]	[illegible]
CHK'D.	
ENG.	
PROJ.ENG.	
PROD.	

digital

TITLE TM03 CONTROL AND WRITE DRIVERS

SCALE 2/1	SIZE	CODE	NUMBER	REV
SHT. 1 OF 3	D	UA	M8937-0-0	B

NEXT HIGHER ASSY. B-00-M8937-0

MS# 104746

M8937-0-0

DIGITAL EQUIPMENT CORPORATION
PARTS LIST

MADE BY Stu Klotzle DATE 8/28/76
CHECKED Lou Metzger DATE 11/15/76 SECTION 1
ENG JIM VAGIAS PER DATE 4 JAN 77
PROD Gordon Stillard DATE 4 JAN 77 ISSUED SECTION 1

NOTES: USED ON OPTION/MODEL TM03

ITEM NO.	DRAWING NO.	PART NO.	DESCRIPTION	QUANTITY/VARIATION	REF DESIGNATION
	C-CS-M8937-0-1		CIRCUIT SCHEMATIC	REF	
	D-UA-M8937-0-0		UNIT ASSEMBLY	REF	
1	D-MD-5012483-0-0	5012483	ETCH BOARD	1	
2		10-00016-00	CAP, 100 PF, 100V, 5% - DM	10	C20 thru C28, C30
3		10-01610-01	CAP, .01 UF, 100V, DISC	20	C1 thru C19, C32
4		10-05306-00	CAP, 6.8 UF, 35V, 10% TANT	4	C29,C31,C33,C34
5		12-09941-02	CONN, 40 PIN (3M)	1	J1
6		13-00229-00	RES, 100 ¼W 5%	1	R10
7		13-00271-00	RES, 220 ¼W 5%	1	R12
8		13-00295-00	RES, 330 ¼W 5%	1	R13
9		13-00316-00	RES 470 ¼W 5%	1	R11
10		13-01972-00	RES, 270 ¼W 5%	9	R1 thru R9
11		15-03100-00	TRANSISTOR, 3009B	9	Q1 thru Q9
12		19-05547-00	I.C. 7474	1	E5,
13		19-05575-00	I.C. 7400	3	E1, E10, E15
14		19-09004-00	I.C. 7402	1	E17
15		19-09686-00	I.C. 7404	2	E19, E20
16		19-09937-00	I.C. 74153	1	E6

E.C.O. NO.

THIS DRAWING AND SPECIFICATIONS, HEREIN, ARE THE PROPERTY OF DIGITAL EQUIPMENT CORPORATION AND SHALL NOT BE REPRODUCED OR COPIED OR USED IN WHOLE OR IN PART AS THE BASIS FOR THE MANUFACTURE OR SALE OF ITEMS WITHOUT WRITTEN PERMISSION COPYRIGHT © 1976, DIGITAL EQUIPMENT CORPORATION

TITLE: TM03 CONTROL AND WRITE DRIVERS

ASSY NO. D-UA-M8937-0-0 SIZE B CODE PL NUMBER M8937-0-0 REV. B

SHEET 1 OF 2

INSERTION PARTS LIST DATA [illegible] REV B

DIGITAL EQUIPMENT CORPORATION

PARTS LIST

MADE BY Stu Klotzle	CHECKED Lora Shrigley	SECTION 1
DATE 8/28/76	DATE 4/15/76	
ENG JIM VAGIAS PER	PROD Gordon Dillard	ISSUED SECTION 1
DATE 4 JAN 77	DATE 4 JAN 77	

NOTES:

USED ON OPTION/MODEL-TMØ3

ITEM NO.	DRAWING NO.	PART NO.	DESCRIPTION	QUANTITY/VARIATION	REF DESIGNATION
17		19-10155-00	I.C. 7408	3	E3,E7,E13
18		19-10224-00	I.C. 7485	1	E2
19		19-10645-00	I.C. 75452	3	E11,E12,E16
20		19-10650-00	I.C. 74161	3	E8,E9,E14
21		19-10651-00	I.C. 74175	1	E4
22		19-10655-00	I.C.74157	1	E18
23		9008337-06	HANDLE, FLIP CHIP	2	
24		9006732-00	EYELET	4	
25					
26					
27		90-09185-00	JUMPER, WIRE, WHT INS.	2	W1,W2

E.C.O. NO

THIS DRAWING AND SPECIFICATIONS, HEREIN, ARE THE PROPERTY OF DIGITAL EQUIPMENT CORPORATION AND SHALL NOT BE REPRODUCED OR COPIED OR USED IN WHOLE OR IN PART AS THE BASIS FOR THE MANUFACTURE OR SALE OF ITEMS WITHOUT WRITTEN PERMISSION COPYRIGHT © 1976, DIGITAL EQUIPMENT CORPORATION

EN-01140A-16-R276(325) DRB 4.25

TITLE: TM03 CONTROL AND WRITE DRIVERS	ASSY NO. D-UA-M8937-0-0	SIZE B	CODE PL	NUMBER M8937-0-0	REV. B
	SHEET 2 OF 2	INSERTION PARTS LIST DATA BASE REV B			

"THIS DRAWING AND SPECIFICATIONS, HEREIN, ARE THE PROPERTY OF DIGITAL EQUIPMENT CORPORATION AND SHALL NOT BE REPRODUCED OR COPIED OR USED IN WHOLE OR IN PART AS THE BASIS FOR THE MANUFACTURE OR SALE OF ITEMS WITHOUT WRITTEN PERMISSION.
COPYRIGHT © 1974, DIGITAL EQUIPMENT CORPORATION"

NOTES:

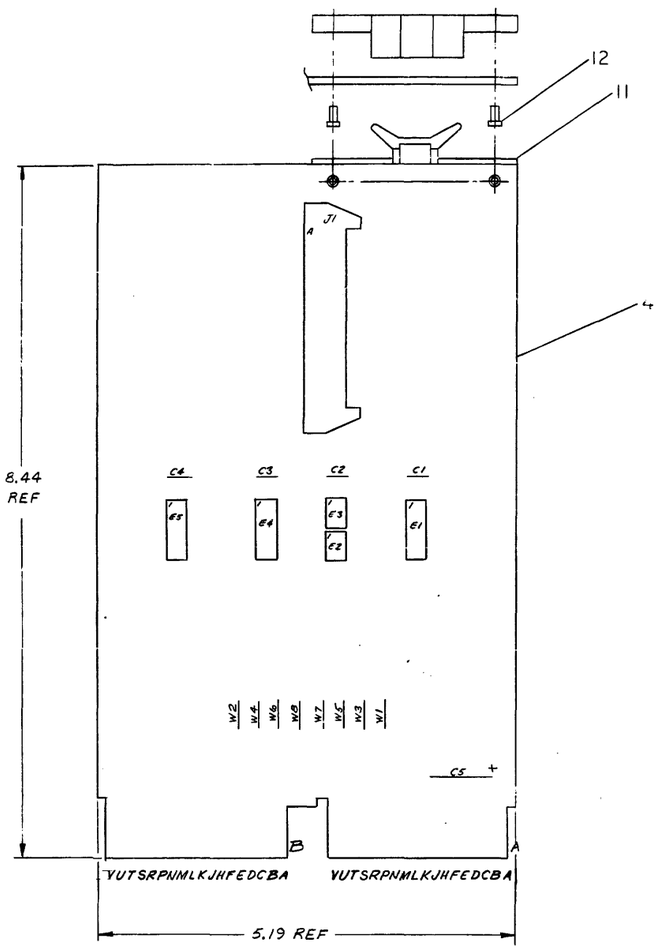

REF				
REF		X-Y COORDINATE HOLE LOCATION	K-CO-M8908-0-1	1
REF		ASSY/DRILLING HOLE LAYOUT	D-AH-M8908-0-5	2
REF		MODULE ECO HISTORY	B-MH-M8908-0-6	3
1		ETCHED CIRCUIT BOARD	50/0988	4
4	C1 THRU C4	CAP .01UF 100V 20% DISC	1001610-01	5
1	C5	CAP 6.8UF 35V 2% TAN	1005306	6
1	J1	CONN 40 PIN	120994!-02	7
2	E2, E3	IC 75452	1910645-01	8
3	E1, E4, E5	IC 11380	1911113	9
8	W1 THRU W8	JUMPER, INSULATED	9009185	10
2		HANDLE, FLIP-CHIP MAGENTA	9008337-6	11
4		EYELET	9006732	12

75452	4	8
11380	1	8
IC TYPE	GND	+ 5V

GND AND 5V ARE USUALLY PIN 7 AND 14 RESPECTIVELY EXCEPTIONS ARE STATED ABOVE

IC PIN LOCATIONS

REV	CHANGE NO	CHK	REVISIONS
*	ORIGINATED	J. HESS	12-25-73
C	M8908-00003	R. RYAN	10 JAN 74
B	M8908-00002	H. DRAB	10 JAN 74
A	M8908-0000!	H. DRAB	6-1-74

DEC NO.	EIA NO.	DEC NO.	EIA NO.

SEMICONDUCTOR CONVERSION CHART

FIRST USED ON OPTION MODEL: TU16

ETCH BOARD REV: B

QTY	REF DESIGNATION	DESCRIPTION	PART NO.	ITEM NO.

PARTS LIST

DRN.		DATE 2/27/74
CHK'D		DATE 3/5/74
ENG.		DATE 3/5/74
PROJ. ENG.		DATE 3-6-74
PROG.		DATE 3-7-74

NEXT HIGHER ASSY

SCALE 1=1

SHEET 1 OF 2

digital EQUIPMENT CORPORATION MAYNARD, MASSACHUSETTS

TITLE: RECEIVER TERMINATOR

SIZE	CODE	NUMBER	REV.
D	CS	M8908-0-1	C

DIST.

DCS M8908-0-1 C

DEC FORM NO 340 1358

"THIS DRAWING AND SPECIFICATIONS, HEREIN, ARE THE PROPERTY OF DIGITAL EQUIPMENT CORPORATION AND SHALL NOT BE REPRODUCED OR COPIED OR USED IN WHOLE OR IN PART AS THE BASIS FOR THE MANUFACTURE OR SALE OF ITEMS WITHOUT WRITTEN PERMISSION.
COPYRIGHT © 1974, DIGITAL EQUIPMENT CORPORATION"

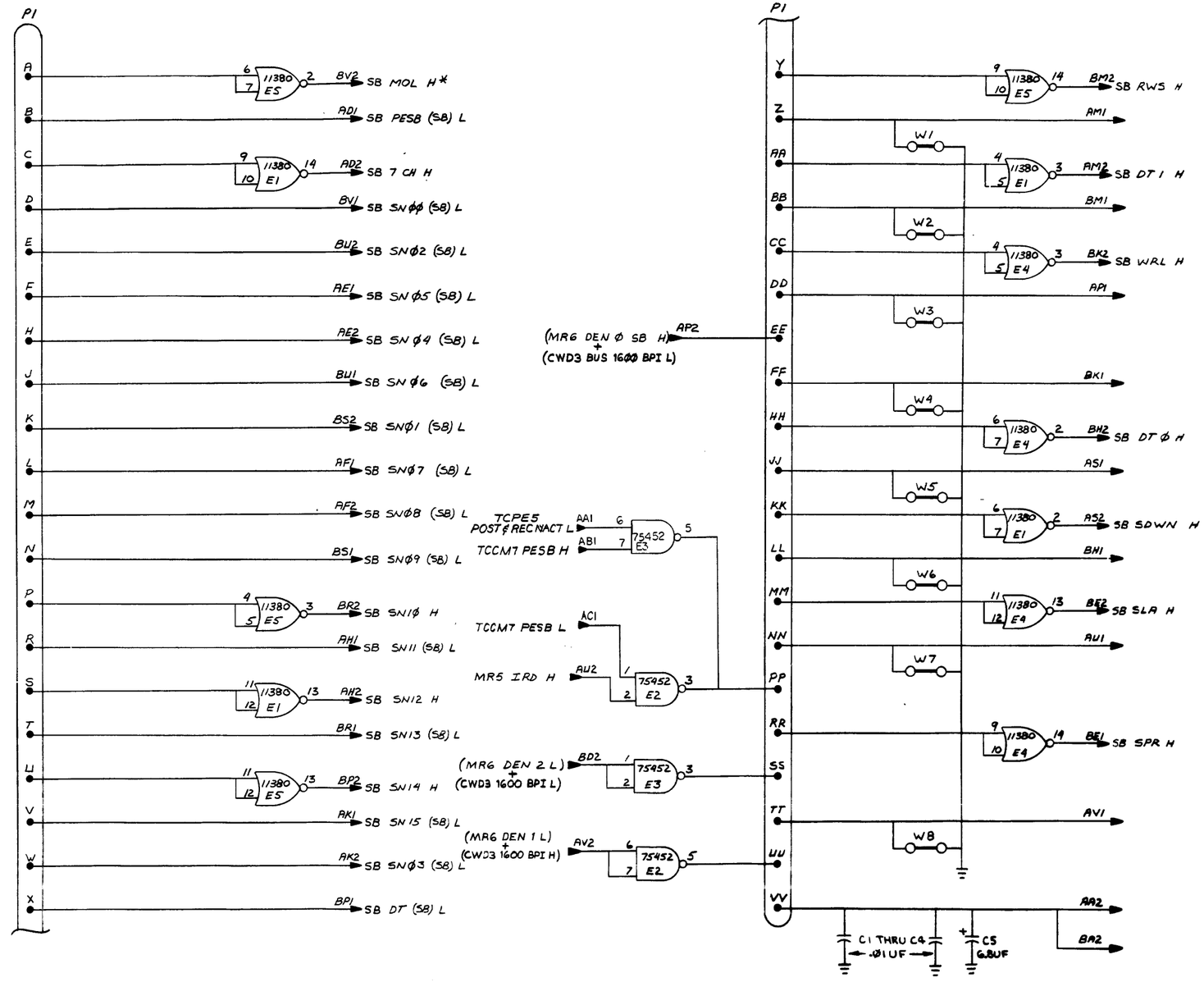

* NOTE: ALL SB SIGNALS ORIGINATE IN SELECTED SLAVE

* THE 3 DENSITY SELECT LINES (IE. PINS AP2, BD2, AV2) ARE WIRED TO THE BACKPLANE AS FOLLOWS:
(1) IF MODULE IS USED IN TMØ2 SIGNAL ORIGINATES ON PRINT MR6.
(2) IF MODULE IS USED IN TMØ3 SIGNAL ORIGINATES ON PRINT CWD3.

REVISIONS		
CHK	CHANGE NO.	REV.

TITLE	SIZE	CODE	NUMBER	REV.
RECEIVER TERMINATOR	D	CS	M89Ø8-Ø-1	C
SCALE	SHEET 2 OF 2	DIST.		

"THIS DRAWING AND SPECIFICATIONS, HEREIN, ARE THE PROPERTY OF DIGITAL EQUIPMENT CORPORATION AND SHALL NOT BE REPRODUCED OR COPIED OR USED IN WHOLE OR IN PART AS THE BASIS FOR THE MANUFACTURE OR SALE OF ITEMS WITHOUT WRITTEN PERMISSION COPYRIGHT © 1974, DIGITAL EQUIPMENT CORPORATION"

NOTES:

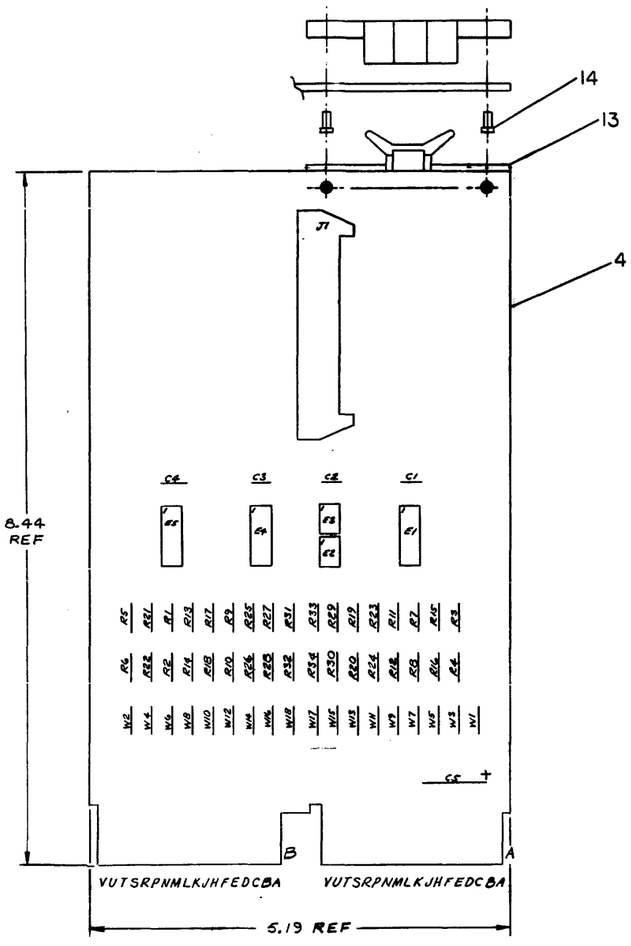

REF		X-Y COORDINATE HOLE LOCATION	K-CO-M8988-B-4	1
REF		ASSY/DRILLING HOLE LAYOUT	D-AH-M8988-YA-5	2
REF		MODULE ECO HISTORY	B-MH-M8988-YA-6	3
1		ETCHED CIRCUIT BOARD	5010982	4
4	C1 THRU C4	CAP .01UF 100V 20% DISC	1001610-01	5
1	C5	CAP 6.8UF 35V 10% TANT	1005306	6
1	J1	CONN 48 PIN	1209941-02	7
10	R1, R3, R5, R7, R9, R11, R13, R15, R17, R19	RES 120 1/4W, 5%	1300247	8
17	R2, R4, R6, R8, R10, R12, R14, R16, R18, R20, R22, R24, R26, R28, R30, R32, R34	RES 220 1/4W, 5%	1300271	9
2	E2, E3	IC 75452	1910645-01	10
3	E1, E4, E5	IC 11589	1911113	11
18	W1 THRU W18	JUMPER, INSULATED	9009185	12
2		HANDLE, FLIP-CHIP, MAGENTA	9008337-6	13
4		EYELET	9006732	14
7	R21, R23, R25, R27, R29, R31, R33	RES 150 1/4W 5%	1300250	15
~~1~~	~~R35~~	~~RES 1K 1/4W 5%~~	~~1300288~~	~~16~~

QTY	REF DESIGNATION	DESCRIPTION	PART NO.	ITEM NO.

PARTS LIST

74452	4	8
11589	1	8
IC TYPE	GND	+ 5V

GND AND 5V ARE USUALLY PIN 7 AND 14 RESPECTIVELY. EXCEPTIONS ARE STATED ABOVE.

IC PIN LOCATIONS

FIRST USED ON OPTION MODEL: TU16

ETCH BOARD REV: B

REV	CHANGE NO.	CHK	DEC NO.	EIA NO.	DEC NO.	EIA NO.
A	M8908YA00001	H. DRAB				
B	M8908YA00002	H. DRAB				

REVISIONS

SEMICONDUCTOR CONVERSION CHART

DRN: [illegible] DATE 2/27/74
CHK'D: [illegible] DATE 3/5/74
ENG: H. Drab DATE 3/6/74
PROJ ENGR: [illegible] DATE 3-7-74
PROG: [illegible] DATE 3-21-74

NEXT HIGHER ASSY

SCALE: + +
SHEET 1 OF 2

digital EQUIPMENT CORPORATION MAYNARD, MASSACHUSETTS

TITLE: RECEIVER TERMINATOR

SIZE	CODE	NUMBER	REV.
D	CS	M8908-YA-1	B

DIST.

D CS M8908-YA-1 B

"THIS DRAWING AND SPECIFICATIONS, HEREIN, ARE THE PROPERTY OF DIGITAL EQUIPMENT CORPORATION AND SHALL NOT BE REPRODUCED OR COPIED OR USED IN WHOLE OR IN PART AS THE BASIS FOR THE MANUFACTURE OR SALE OF ITEMS WITHOUT WRITTEN PERMISSION.
COPYRIGHT © 1974, DIGITAL EQUIPMENT CORPORATION"

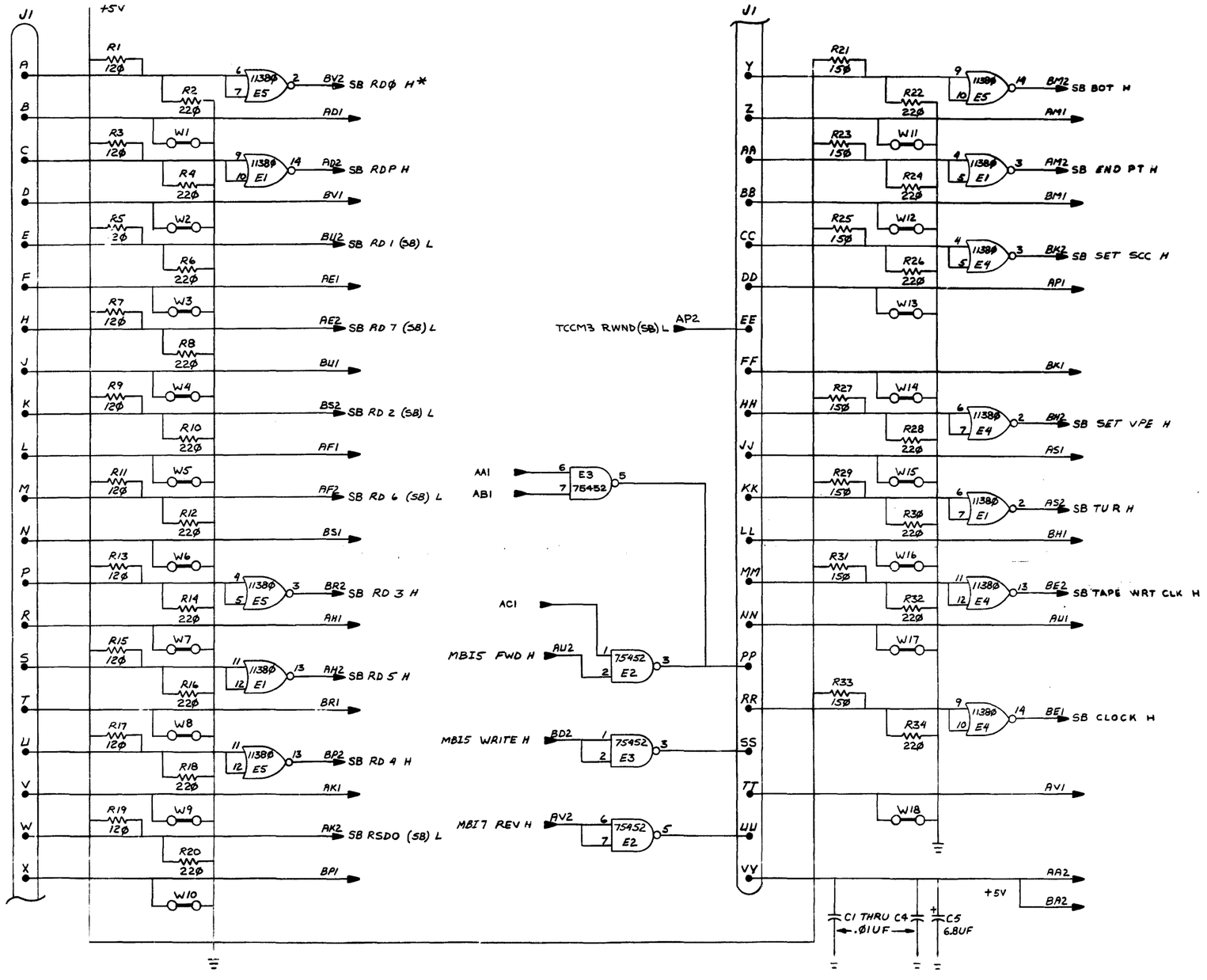

*NOTE: ALL SB SIGNALS EXCEPT "SETSSC H" ORIGINATE IN SELECTED SLAVE. "SETSSC H" ORIGINATES IN ANY ON-LINE SLAVE.

REVISIONS		
CHK	CHANGE NO.	REV.

TITLE	SIZE	CODE	NUMBER	REV.
RECEIVER TERMINATOR	D	CS	M8908-YA-1	B
SCALE —	SHEET 2 OF 2	DIST.		

M8908-YA-1 B

"THIS DRAWING AND SPECIFICATIONS, HEREIN, ARE THE PROPERTY OF DIGITAL EQUIPMENT CORPORATION AND SHALL NOT BE REPRODUCED OR COPIED OR USED IN WHOLE OR IN PART AS THE BASIS FOR THE MANUFACTURE OR SALE OF ITEMS WITHOUT WRITTEN PERMISSION.
COPYRIGHT © DIGITAL EQUIPMENT CORPORATION"

NOTES:

1. UNLESS OTHER WISE SPECIFIED:
A. RESISTANCE IN OHMS
B. CAPACITANCE IN MICROFARADS

SPARE IC'S

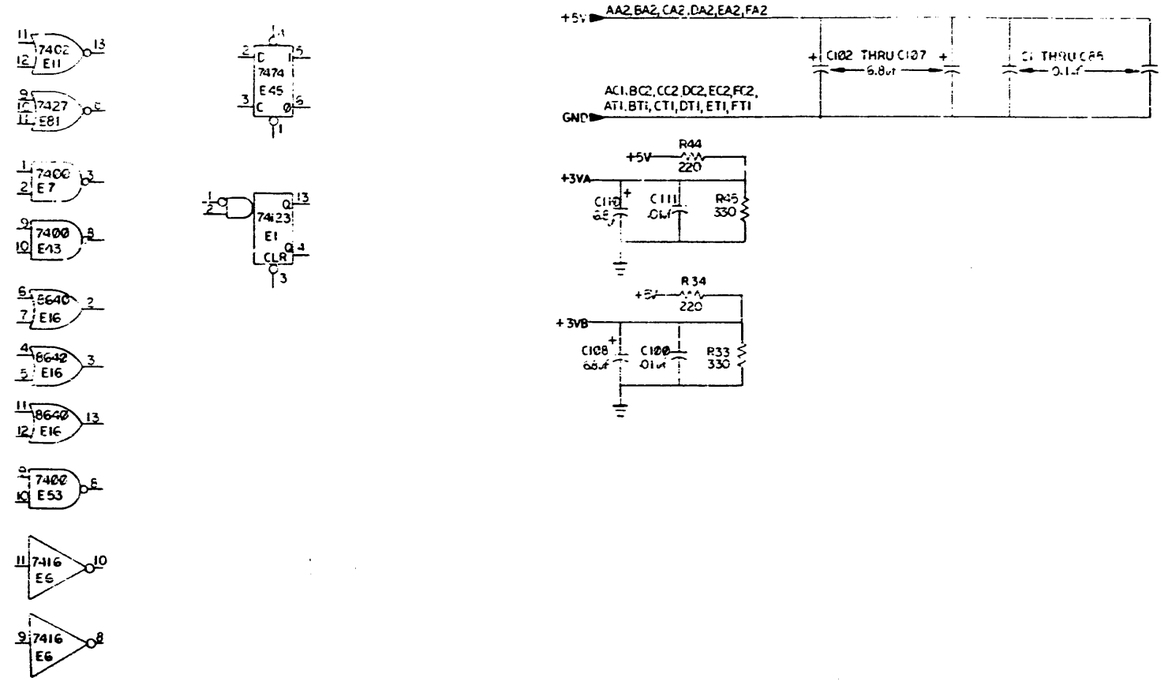

IC TYPE	GND	+5V
DEC 7475	12	5
DEC 7485	8	16
DEC 74123	8	16
DEC 74145	8	16
DEC 74151	8	16
DEC 74154	12	24
DEC 74155	8	16
DEC 74193	8	16
DEC 384	1	8
DEC 8234	8	16

GND AND 5V ARE USUALLY PIN 7 AND 14 RESPECTIVELY EXCEPTIONS ARE STATED ABOVE

IC PIN LOCATIONS

QTY	REF. DESIGNATION	DESCRIPTION	PART NO.	ITEM NO.

PARTS LIST

FIRST USED ON OPTION MODEL: TU16

ETCH BOARD REV. C

DEC NO.	EIA NO.	DEC NO.	EIA NO.
		D664	IN3606

SEMICONDUCTOR CONVERSION CHART

REV.	CHANGE NO.	CHK
J	M8909-YA-3	

REVISIONS

DRN. M. PORRIER DATE 11-8-73
CHK'D. F. CANBERRY DATE 1-22-74
ENG. H. DRAB DATE 1-22-74
PROJ. ENG. H. DRAB DATE 1-23-74
PROD. R. KOCUON DATE 1-29-74
NEXT HIGHER ASSY
SCALE
SHEET 1 OF 11

digital

TITLE: MASS BUS INTERFACE (MBI 1)

SIZE D | CODE CS | NUMBER M8909-YA-1 | REV. J
DIST.

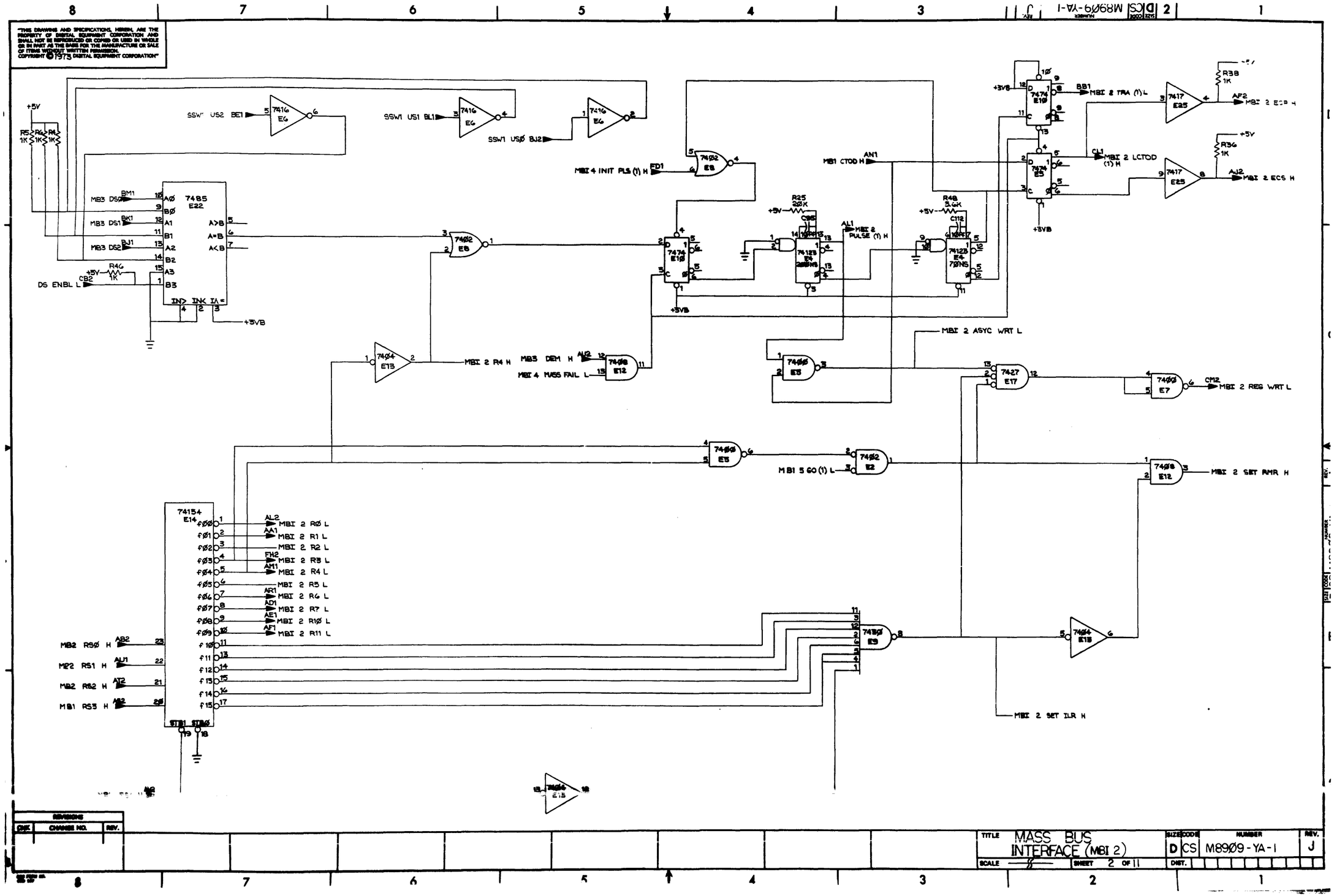

REVISIONS		
CHK	CHANGE NO.	REV.

TITLE	SIZE	CODE	NUMBER	REV.
MASS BUS INTERFACE (MBI 2)	D	CS	M89Ø9-YA-1	J
SCALE	SHEET 2 OF 11	DIST.		

"THIS DRAWING AND SPECIFICATIONS, HEREIN, ARE THE PROPERTY OF DIGITAL EQUIPMENT CORPORATION AND SHALL NOT BE REPRODUCED OR COPIED OR USED IN WHOLE OR IN PART AS THE BASIS FOR THE MANUFACTURE OR SALE OF ITEMS WITHOUT WRITTEN PERMISSION.
COPYRIGHT © 1975 DIGITAL EQUIPMENT CORPORATION"

MBI 2 R4 L (AM1) — 384 E36 — MBI 2 REG WRT L CM2

STB 74151 E77

MB2 C7 BF2 — D7
MB2 C6 BD2 — D6
MB1 C5 BB2 — D5
MB1 C4 BR1 — D4
MB1 C3 BU1 — D3
MB1 C2 BS2 — D2
MB1 C1 AD2 — D1
MB1 CØ AE2 — DØ

S2 S1 SØ

MBI 4 MAS CLR L (DS2) — 744Ø E57 — +3VA

7402 E51 — 7402 E51 — 7404 E41 — CC1 MBI 3 ATA H — CV1 MBI 3 ATTN L

7410 E56

MBI 5 WRT RØØ H — 7410 E56 — MBI 1Ø COMPER L

7404 E41 — MBI 3 END PT L

SB END PT H CF1 — 74ØØ E52 — MBI 5 STRBATACHK (1) H

MBI 5 RWND L — 744Ø E57 — 74ØØ E52
MBI 5 ERASE L
MBI 5 WFMK L

74145 E76

MBI 2 US Ø (BJ2) — DØ
MBI 2 US 1 (BL1) — D1
MBI 2 US 2 (BE1) — D2
D3

fØ C MUX Ø
f1 C MUX 1
f2 C MUX 2
f3 C MUX 3
f4 C MUX 4
f5 C MUX 5
f6 C MUX 6
f7 C MUX 7
f8
f9

SEE NOTE

MBI 5 SPACE H — 7402 E51 — 1Ø

+5V — R2 1ØK — C87 27pf

TCCM7 9SC L FS1 — 74ØØ E52 — MBI 1Ø COMPER L

MBI 5 GO BUF H — 74123 E42 9ØNS — +3VA

MBI 2 R4 H — +3VA — 7410 E56

NOTE:
CMUX LINES ARE GENERATED ON M89Ø9, M89Ø3, M89Ø5

REVISIONS		
SYM	CHANGE NO.	REV.

TITLE	MASS BUS INTERFACE (MBI 3)		
SIZE	CODE	NUMBER	REV.
D	DCS	M89Ø9-YA-1	J1
SCALE		SHEET 3 OF 11	DIST.

"THIS DRAWING AND SPECIFICATIONS, HEREIN, ARE THE PROPERTY OF DIGITAL EQUIPMENT CORPORATION AND SHALL NOT BE REPRODUCED OR COPIED OR USED IN WHOLE OR IN PART AS THE BASIS FOR THE MANUFACTURE OR SALE OF ITEMS WITHOUT WRITTEN PERMISSION.
COPYRIGHT © 1972 DIGITAL EQUIPMENT CORPORATION"

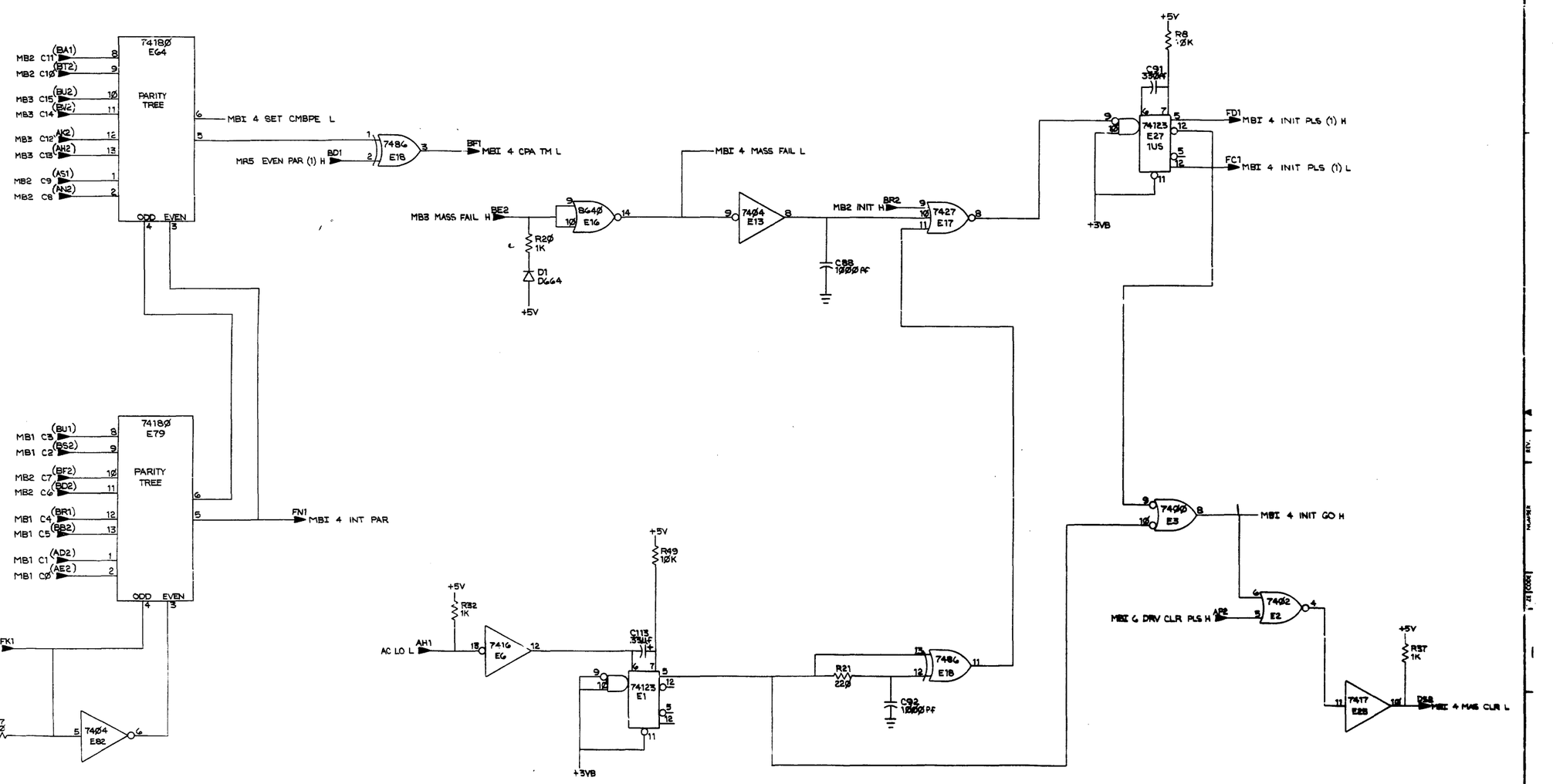

REVISIONS		
CHK	CHANGE NO.	REV.

TITLE: MASS BUS INTERFACE (MBI 4)		SIZE D	CODE CS	NUMBER M8909-YA-1 REV. J
SCALE:	SHEET 4 OF 11	DIST.		

"THIS DRAWING AND SPECIFICATIONS, HEREIN, ARE THE PROPERTY OF DIGITAL EQUIPMENT CORPORATION AND SHALL NOT BE REPRODUCED OR COPIED OR USED IN WHOLE OR IN PART AS THE BASIS FOR THE MANUFACTURE OR SALE OF ITEMS WITHOUT WRITTEN PERMISSION.
COPYRIGHT © 1973 DIGITAL EQUIPMENT CORPORATION"

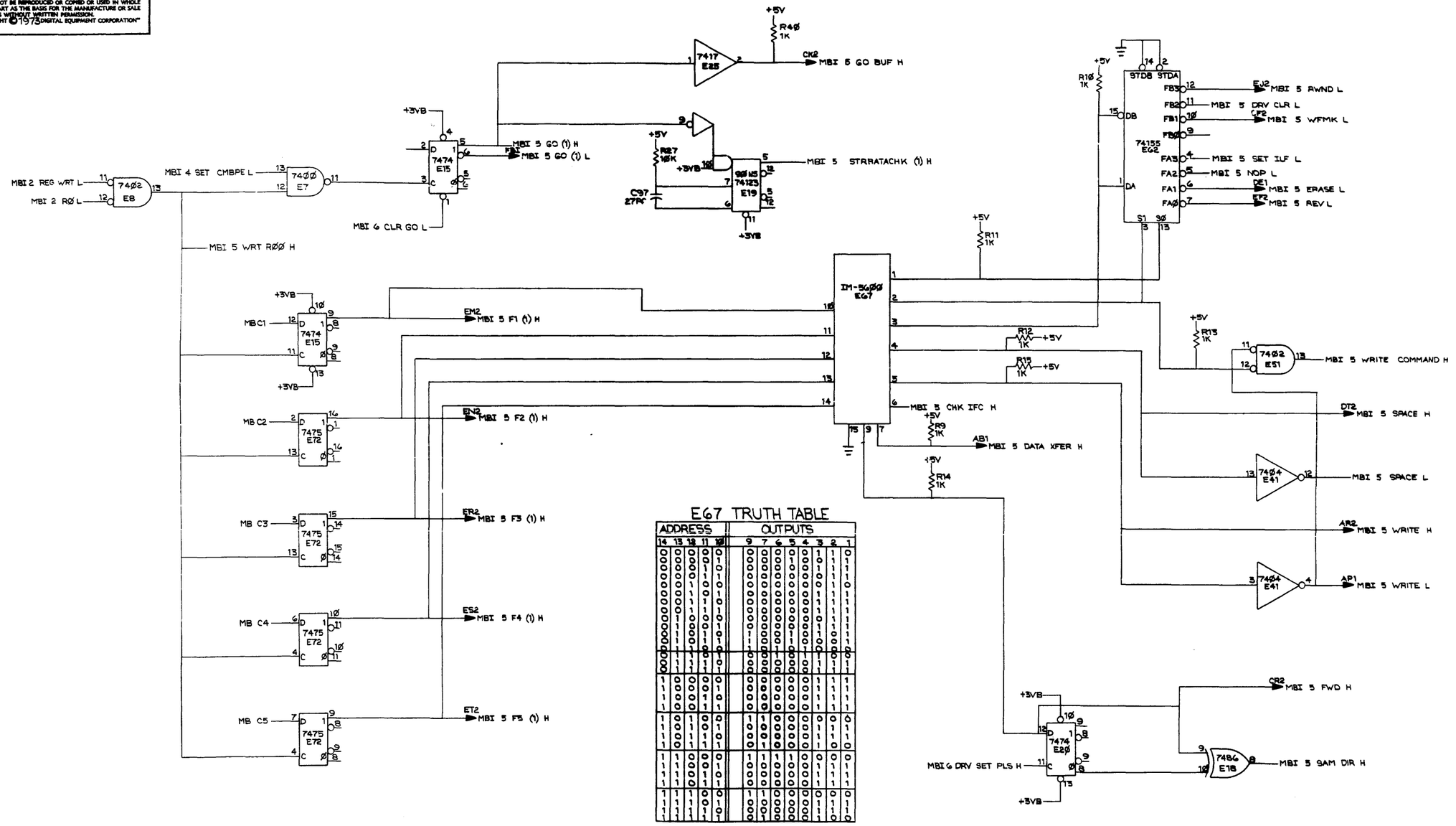

E67 TRUTH TABLE

ADDRESS					OUTPUTS							
14	13	12	11	10	9	7	6	5	4	3	2	1
0	0	0	0	0	0	0	0	0	0	1	1	0
0	0	0	0	1	0	0	0	1	0	1	1	1
0	0	0	1	0	0	0	0	0	0	0	1	1
0	0	0	1	1	0	0	0	0	0	0	1	1
0	0	1	0	0	0	0	0	0	0	0	1	1
0	0	1	0	1	0	0	0	0	0	0	1	1
0	0	1	1	0	0	0	0	0	0	0	1	1
0	0	1	1	1	0	0	0	0	0	0	1	1
0	1	0	0	0	0	0	0	0	0	0	1	1
0	1	0	0	1	0	0	0	0	0	0	1	1
0	1	0	1	0	0	0	0	0	0	0	1	1
0	1	0	1	1	0	0	0	0	0	0	1	1
0	1	1	0	0	1	0	0	0	0	0	1	1
0	1	1	0	1	1	0	0	0	0	0	1	1
0	1	1	1	0	1	0	0	0	0	0	1	1
0	1	1	1	1	1	0	0	0	0	0	1	1
1	0	0	0	0	0	0	0	0	0	0	1	1
1	0	0	0	1	0	0	0	0	0	0	1	1
1	0	0	1	0	0	0	0	0	0	0	1	1
1	0	0	1	1	0	0	0	0	0	0	1	1
1	0	1	0	0	1	0	0	0	0	0	1	1
1	0	1	0	1	0	0	0	0	0	0	1	1
1	0	1	1	0	0	0	0	0	0	0	1	1
1	0	1	1	1	0	0	0	0	0	0	1	1
1	1	0	0	0	1	0	0	0	0	0	1	1
1	1	0	0	1	0	0	0	0	0	0	1	1
1	1	0	1	0	0	0	0	0	0	0	1	1
1	1	0	1	1	0	0	0	0	0	0	1	1
1	1	1	0	0	1	0	0	0	0	0	1	1
1	1	1	0	1	0	0	0	0	0	0	1	1
1	1	1	1	0	0	0	0	0	0	0	1	1
1	1	1	1	1	0	0	0	0	0	0	1	1

REVISIONS		
CHK	CHANGE NO.	REV.

TITLE	SIZE	CODE	NUMBER	REV.
MASS BUS INTERFACE (MBI 5)	D	CS	M8909-YA-I	J
SCALE	SHEET 5 OF 11	DIST.		

"THIS DRAWING AND SPECIFICATIONS, HEREIN, ARE THE PROPERTY OF DIGITAL EQUIPMENT CORPORATION AND SHALL NOT BE REPRODUCED OR COPIED OR USED IN WHOLE OR IN PART AS THE BASIS FOR THE MANUFACTURE OR SALE OF ITEMS WITHOUT WRITTEN PERMISSION.
COPYRIGHT © 1973 DIGITAL EQUIPMENT CORPORATION"

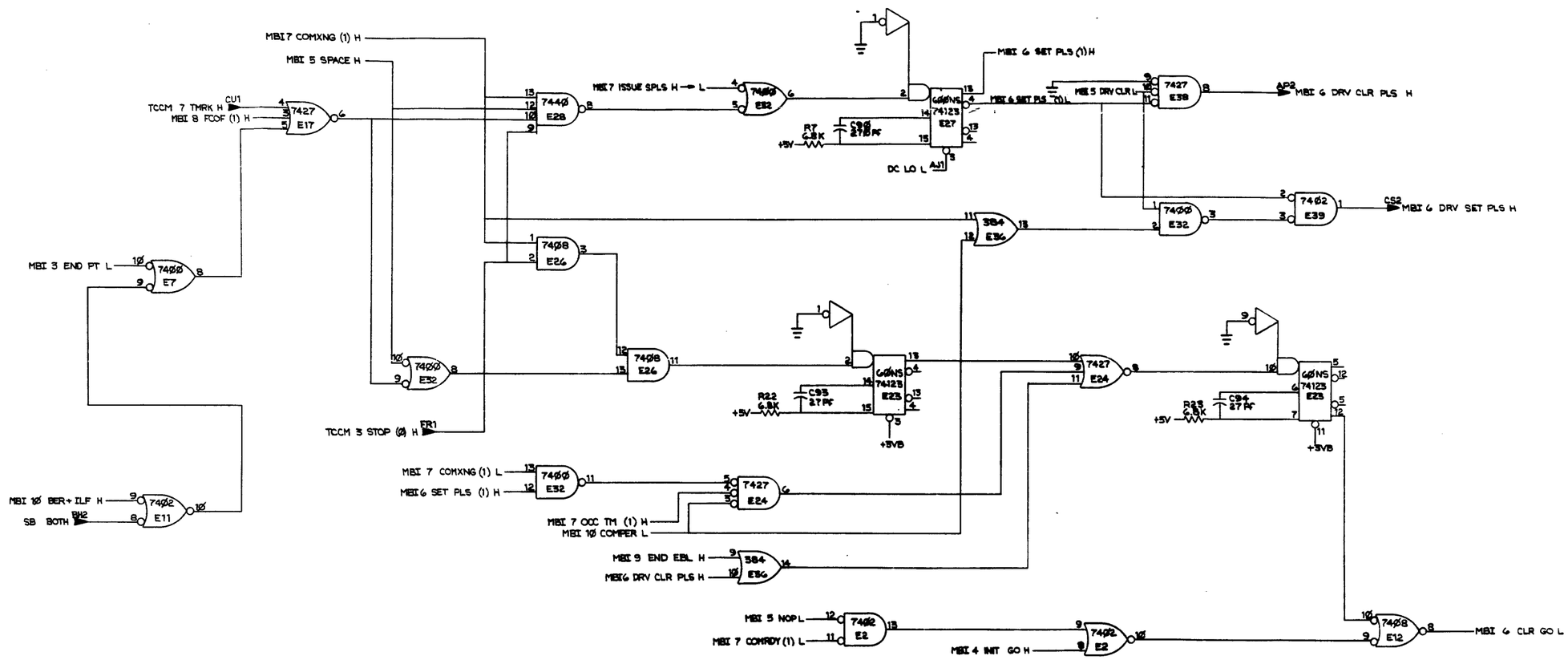

REVISIONS		
CHK	CHANGE NO.	REV.

TITLE	SIZE	CODE	NUMBER	REV.
MASS BUS INTERFACE (MBI 6)	D	CS	M8909-YA-1	J.
SCALE	SHEET 6 OF 11	DIST.		

"THIS DRAWING AND SPECIFICATIONS, HEREIN, ARE THE PROPERTY OF DIGITAL EQUIPMENT CORPORATION AND SHALL NOT BE REPRODUCED OR COPIED OR USED IN WHOLE OR IN PART AS THE BASIS FOR THE MANUFACTURE OR SALE OF ITEMS WITHOUT WRITTEN PERMISSION.
COPYRIGHT © 1973 DIGITAL EQUIPMENT CORPORATION"

MBI 5 GO (1) H
74123 E19 25Ø NS
MBI 7 COMRDY (1) H
MBI 7 COMRDY (1) L
C96 82 PF
R26 10K
+5V
+3VB
+3VB
MBI 1Ø COMPER H
MBI 5 WAT RØØ H
7474 E3Ø
MBI 7 PREV ER (1) H
7402 E49
MBI 7 CHK ER L
7404 E48
+3VA
74123 E46 40 NS
C94 27 PF
R1 6.8K
+5V
+3VA
MB OCC REC H DB1
7410 E42
MBI 7 PREV OCC L
MBI 5 DATA XFERH
+3VB
7474 E2Ø
DC1
BP1
MBI 7 OCC TM (1) H
MBI 7 OCC TM (1) L
MBI 5 WRITE L
7408 E47
7417 E25
AM2
MBI 7 EDS H
MBI 7 READ H
+5V
R39 1K
+3V
R16 1K
MBI 5 CHK IFC H
7408 E44
MBI 7 CLK IIFC H
MBI 5 SET ILF L
MBI7 CHK ER L
7402 E49
7404 E37
MBI 7 SET ILF F/F L
MBI 5 REV L
7404 E41
BS1
MBI 7 REV H
MBI 5 GO (1) H
MBI 8 IFCE L
7408 E47
MBI 7 SET NEF F/F L
7400 E52
MBI 7 CHK ER H
MBI 5 WRITE COMMAND H
SB WRL H BM2
SB BOT H BM2
7450 E31
7400 E53
TCCM 4 MOL L DA1
7404 E13
TCCM 3 AEMD (1) H CU1
7402 E33
MBI 7 MOL L/AEMD (1) H
MBI 5 DRV CLR L
7400 E71
7400 E43
MBI7 RIP H
8640 E16
8640 E16
MBI 7 SET UNS L
MBI 6 SET PLS L
MBI 5 GO BUF H
7474 E40
MBI 7 SET OPI DLY (1) H
FP2
MBI 7 SET OPI DLY (1) L
+3VB
7474 E3Ø
MBI 7 COMXNG (1) H
MBI 7 COMXNG (1) L
+3VA
TCCM 7 PIP H CV2
MBI 5 WRITE RØØ H
7474 E4Ø
7402 E39
MBI7 COM RDY (1) H
7408 E44
MBI 5 GO (1) L EV1
TCCM 5 RECORD H
7402 E39
7408 E71
MBI 9 BER+ ILFL
MBI 6 DRV SET PLS H
7404 E37
CP1
MBI 7 DRV SET PLS L
SB TUR H CN1
7404 E37
MR6 DEN2 (1) H DM2
TCCM 7 PESB L DD1
7486 E18
7402 E66
MBI 5 WRITE L
7402 E66
MB RUN H BN1
7402 E39
MBI 7 OCC TM (1) L
7427 E38
7404 E37
MBI 7 ISSUE SPLS H → L
DS4 SET NEF H EU2
R52 1K
0+5V
MBI 7 RIP H
MBI4 MAS CLR L
7408 E71
MBI 7 CLEAR ERRORS L
+3VA
MBI 5 RWND L
MBI 5 F1 (1) H
MBI 5 F2 (1) H
7427 E61
7474 E45
CU2
MBI 7 BRIP (1) L
MBI 7 COM RDY (1) H
MBI 6 CLR GO L
MBI 5 DRV CLR L
7404 E37
TCCM 7 SDWN L CR1
7427 E38
MBI 5 SAM DIR H
CE1
7408 E26

REVISIONS		
CHK	CHANGE NO.	REV.

TITLE MASS BUS INTERFACE (MBI 7)
SIZE D CODE CS NUMBER M8909-YA-1 REV J
SCALE SHEET 7 OF 11 DIST.

"THIS DRAWING AND SPECIFICATIONS, HEREIN, ARE THE PROPERTY OF DIGITAL EQUIPMENT CORPORATION AND SHALL NOT BE REPRODUCED OR COPIED OR USED IN WHOLE OR IN PART AS THE BASIS FOR THE MANUFACTURE OR SALE OF ITEMS WITHOUT WRITTEN PERMISSION.
COPYRIGHT © 1973 DIGITAL EQUIPMENT CORPORATION"

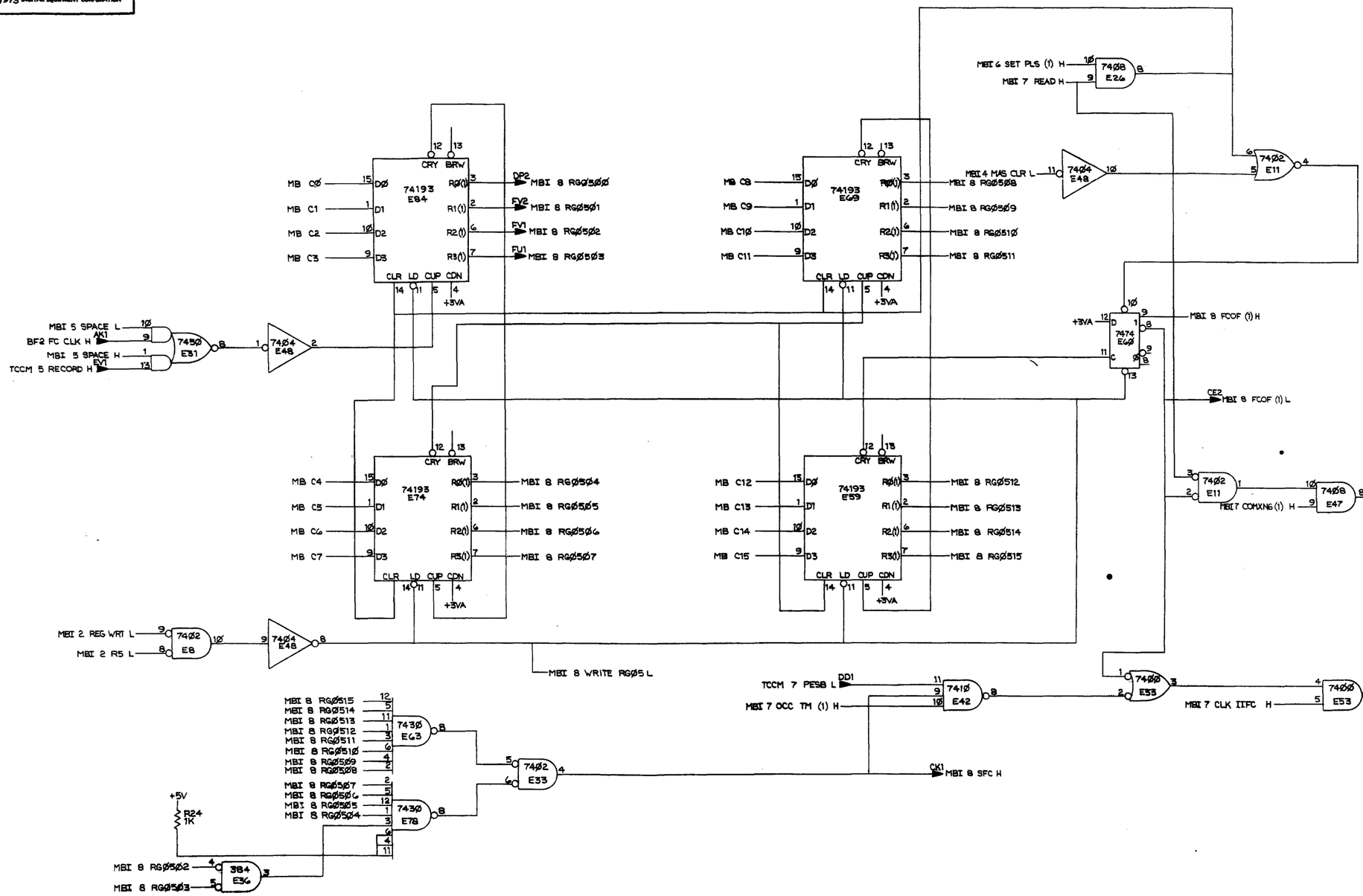

REVISIONS		
ECO#	CHANGE NO.	REV.

TITLE	MASS BUS INTERFACE (MBI 8)	SIZE/CODE D CS	NUMBER M8909-YA-1 REV. J
SCALE		SHEET 8 OF 11	DIST.

"THIS DRAWING AND SPECIFICATIONS, HEREIN, ARE THE PROPERTY OF DIGITAL EQUIPMENT CORPORATION AND SHALL NOT BE REPRODUCED OR COPIED OR USED IN WHOLE OR IN PART AS THE BASIS FOR THE MANUFACTURE OR SALE OF ITEMS WITHOUT WRITTEN PERMISSION.
COPYRIGHT © 1973 DIGITAL EQUIPMENT CORPORATION"

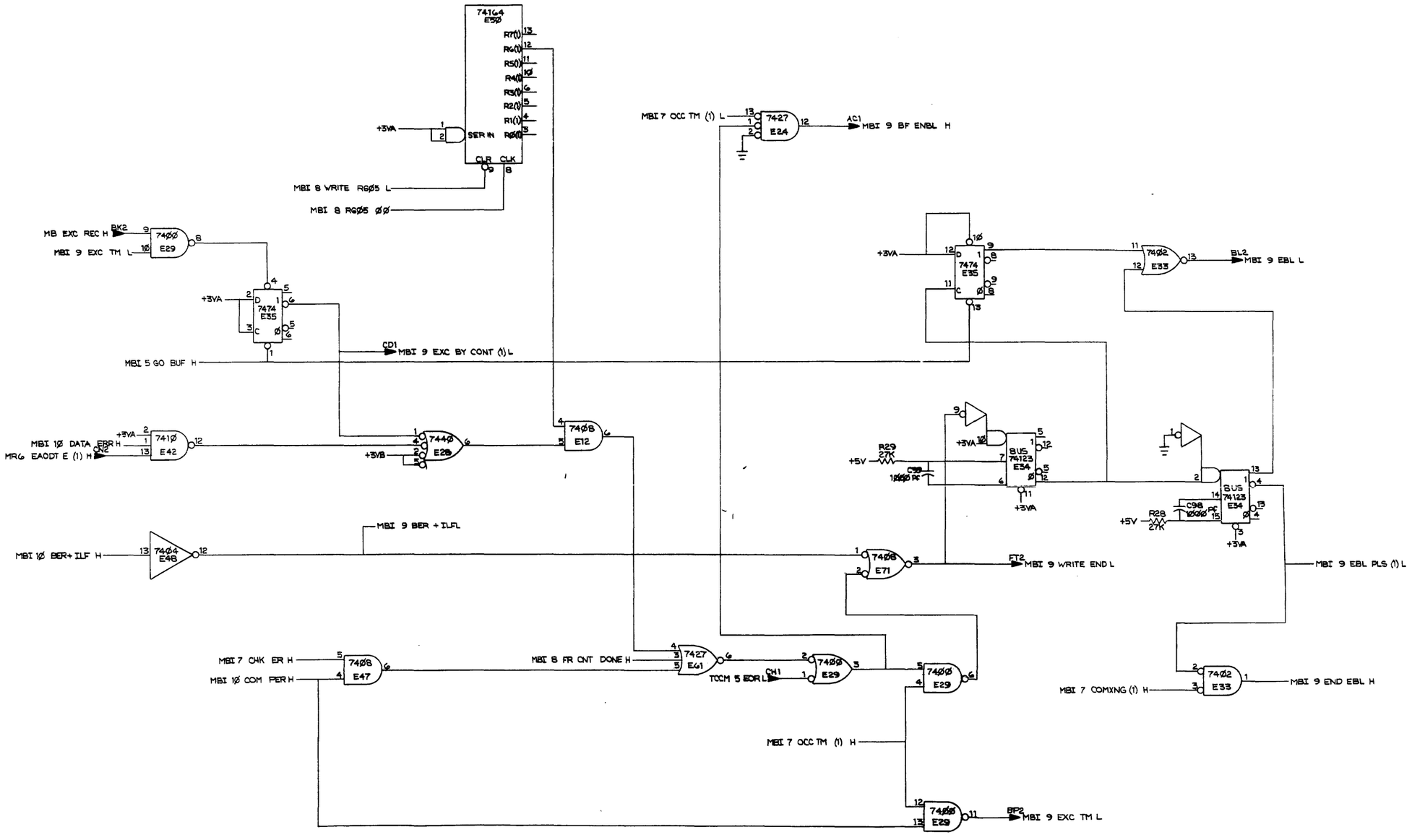

REVISIONS		
DATE	CHANGE NO.	REV.

TITLE	MASS BUS INTERFACE (MBI 9)			
SCALE		SIZE	CODE	NUMBER / REV.
SHEET	9 OF 11	D	CS	M8909-YA-1 / J
DIST.				

"THIS DRAWING AND SPECIFICATIONS, HEREIN, ARE THE PROPERTY OF DIGITAL EQUIPMENT CORPORATION AND SHALL NOT BE REPRODUCED OR COPIED OR USED IN WHOLE OR IN PART AS THE BASIS FOR THE MANUFACTURE OR SALE OF ITEMS WITHOUT WRITTEN PERMISSION.
COPYRIGHT © 1973 DIGITAL EQUIPMENT CORPORATION"

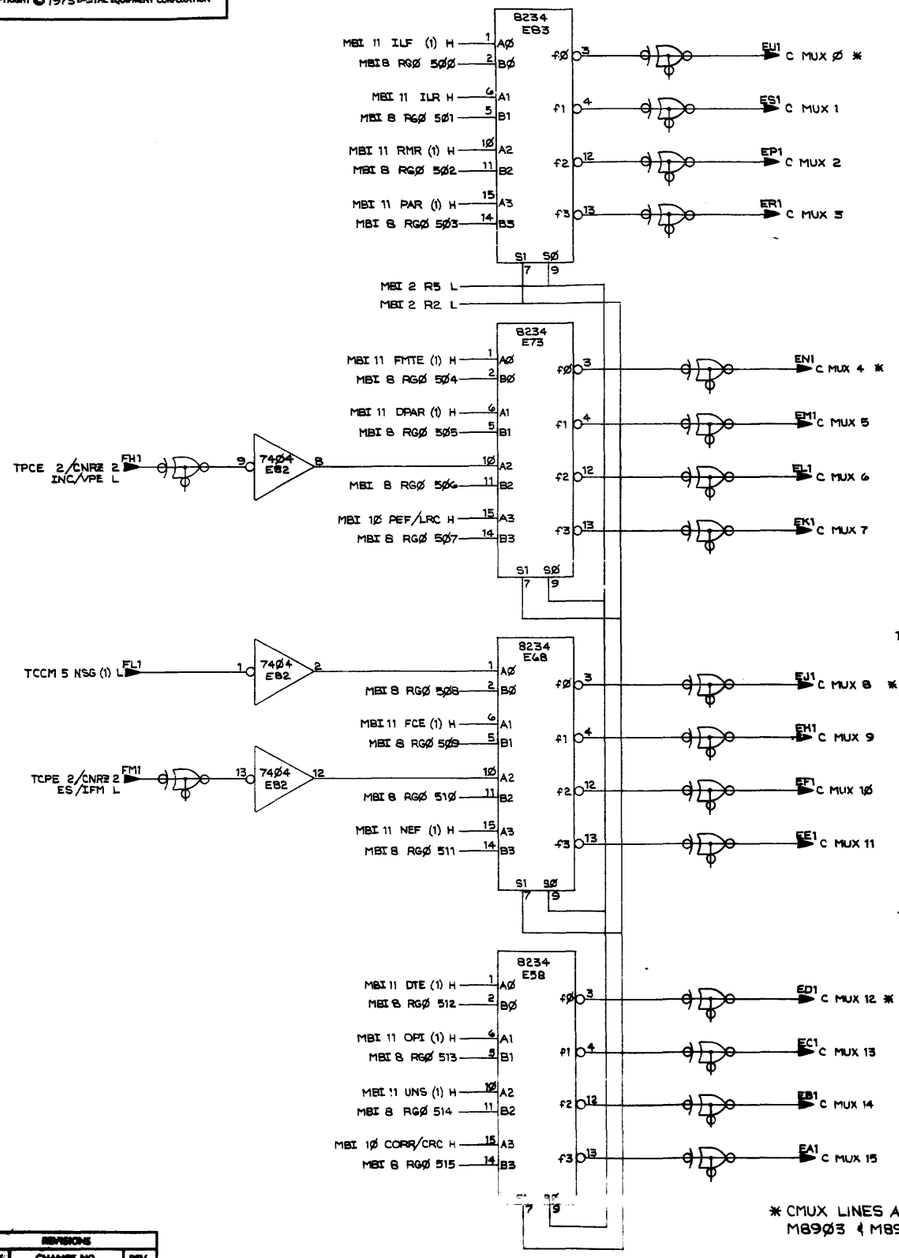

* CMUX LINES ARE ORIGINATED ON M89Ø9, M89Ø3 & M89Ø5

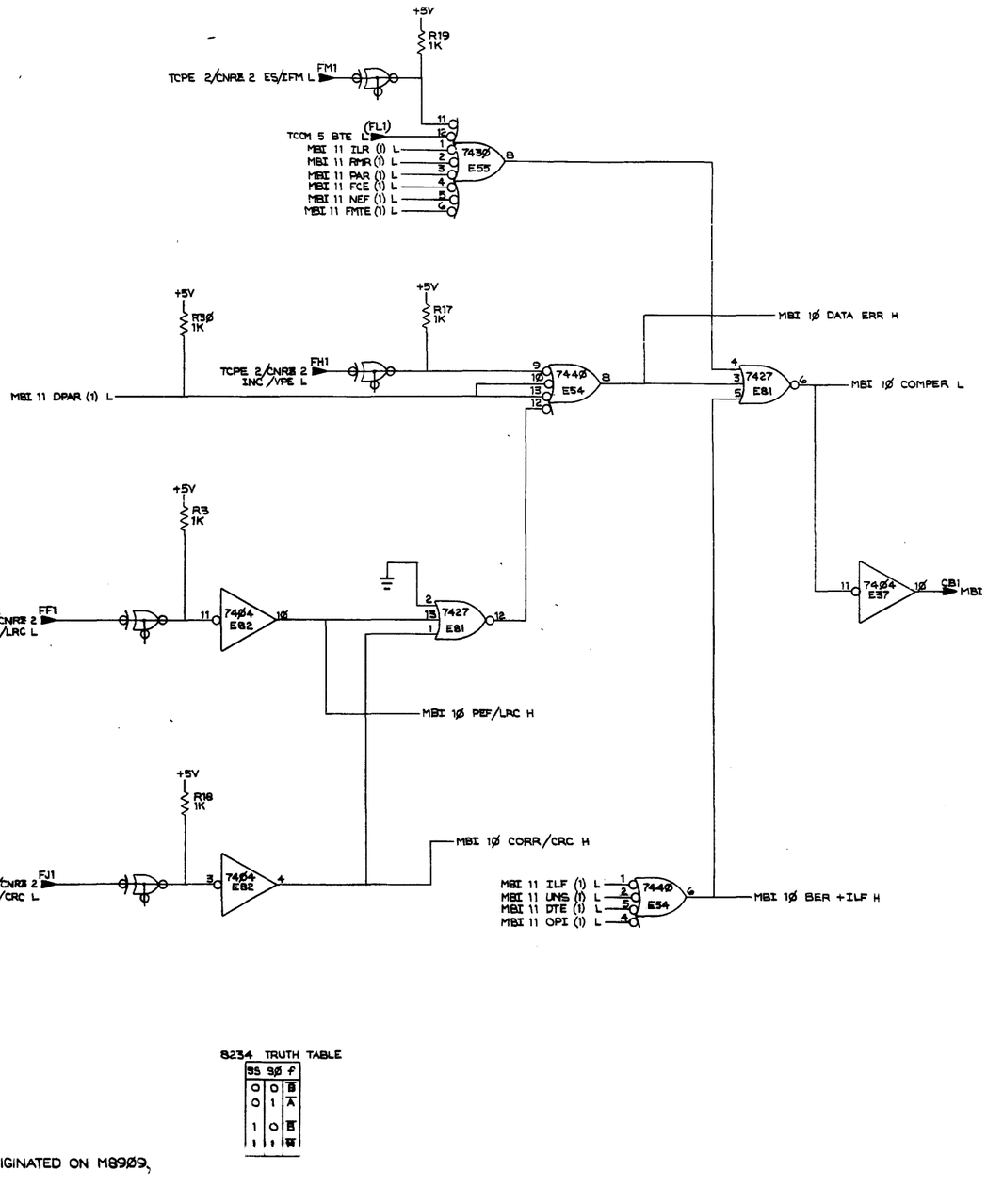

8234 TRUTH TABLE

S1	SØ	f
Ø	Ø	B
Ø	1	A
1	Ø	B
1	1	A

REVISIONS		
CHK	CHANGE NO.	REV.

TITLE	MASS BUS INTERFACE (MBI 1Ø)		
SCALE		SHEET 1Ø OF 11	
SIZE	CODE	NUMBER	REV.
D	CS	M89Ø9-YA-1	J
DIST.			

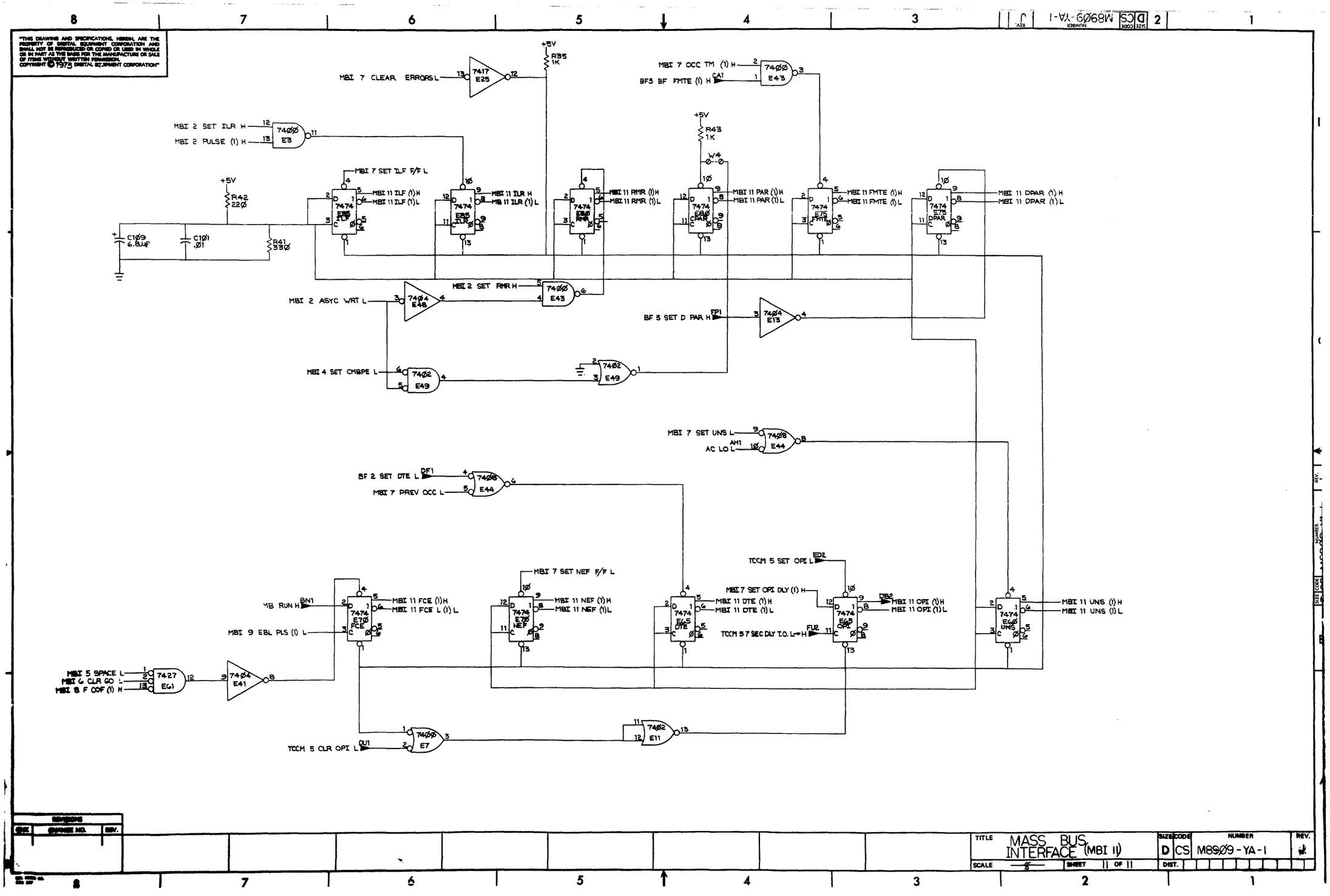

"THIS DRAWING AND SPECIFICATIONS, HEREIN, ARE THE PROPERTY OF DIGITAL EQUIPMENT CORPORATION AND SHALL NOT BE REPRODUCED OR COPIED OR USED IN WHOLE OR IN PART AS THE BASIS FOR THE MANUFACTURE OR SALE OF ITEMS WITHOUT WRITTEN PERMISSION. COPYRIGHT © 1973 DIGITAL EQUIPMENT CORPORATION"
MBI 7 CLEAR ERRORS L
MBI 2 SET ILR H
MBI 2 PULSE (1) H
MBI 7 SET ILF F/F L
MBI 11 ILF (1) H
MBI 11 ILF (1) L
MBI 11 ILR H
MB 11 ILR (1) L
MBI 11 RMR (1) H
MBI 11 RMR (1) L
MBI 11 PAR (1) H
MBI 11 PAR (1) L
MBI 11 FMTE (1) H
MBI 11 FMTE (1) L
MBI 11 DPAR (1) H
MBI 11 DPAR (1) L
MBI 7 OCC TM (1) H
BF3 BF FMTE (1) H
MBI 2 ASYC WRT L
MBI 2 SET RMR H
BF 3 SET D PAR H
MBI 4 SET CMBPE L
MBI 7 SET UNS L
AC LO L
BF 2 SET DTE L
MBI 7 PREV OCC L
MB RUN H
MBI 9 EBL PLS (1) L
MBI 11 FCE (1) H
MBI 11 FCE L (1) L
MBI 7 SET NEF F/F L
MBI 11 NEF (1) H
MBI 11 NEF (1) L
MBI 11 DTE (1) H
MBI 11 DTE (1) L
TCCM 5 SET OPI L
MBI 7 SET OPI DLY (1) H
TCCM 5 7 SEC DLY T.O. L→H
MBI 11 OPI (1) H
MBI 11 OPI (1) L
MBI 11 UNS (1) H
MBI 11 UNS (1) L
MBI 5 SPACE L
MBI 6 CLR GO L
MBI 8 F COF (1) H
TCCM 5 CLR OPI L
+5V
R35 1K
R43 1K
R42 220
R41 330
C109 6.8uF
C101 .01
7417 E25
7400 E3
7474 E85 ILF
7474 E85 ILR
7474 E80 RMR
7474 E80 CPAR
7474 E75 FMTE
7474 E75 DPAR
7404 E48
7400 E43
7404 E13
7402 E49
7408 E44
7408 E44
7474 E70 FCE
7474 E70 NEF
7474 E65 DTE
7474 E65 OPI
7474 E60 UNS
7427 E61
7404 E41
7400 E7
7402 E11
TITLE MASS BUS INTERFACE (MBI 11)
SIZE D
CODE CS
NUMBER M8909-YA-1
REV. J
SCALE
SHEET 11 OF 11
DIST.
REVISIONS
CHK
CHANGE NO.
REV.

THIS DRAWING AND SPECIFICATION, HEREIN, ARE THE PROPERTY OF DIGITAL EQUIPMENT CORPORATION AND SHALL NOT BE REPRODUCED OR COPIED OR USED IN WHOLE OR IN PART AS THE BASIS FOR THE MANUFACTURE OR SALE OF ITEMS WITHOUT WRITTEN PERMISSION.
COPYRIGHT © 1977, DIGITAL EQUIPMENT CORPORATION

NOTES:
1. TO ENABLE READING RECORDS LESS THAN 10 CHARACTERS W2 MUST BE REMOVED AND W3 ADDED.

+3V
CNRZ1 SHORT REC II (1) H
7474 E14
7400 E12
7428 E26
TCCM4 WRT CLK H
ADI
7416 E7
CLR
LD
CLK
CNT EN
CRY EN
7410 E8
7420 E22
7474 E15
BN2
TCCMG RSDO H
CNRZ1 TPMK WINDOW (Φ) H
BL2
CNRZ1 RD ACTV L
CNRZ1 SHORT REC II (Φ) H
CNRZ1 SHORT REC I (1) H
7474 E14
7400 E12
TCCMG RSDO H
TCCM3 READING H
TCCM7 PESB L
7408 E26
BR2
CNRZ1 NO CHAR RD L
CNRZ1 RD RESET L
SEE NOTE 1
W3
W2
SHORT REC III
7404 E30
7405 E21
BM2
CNRZ1 ENBL SHDN CNTR L
TCCM7 PESB L
7400 E12
BF2
CNRZ1 REV LRCS L
BE2
CNRZ1 REV LRCS H
7419? E20
7400 E19
7405 E21
CB2
CNRZ1 RST SHDN CNTR L
CNRZ1 SHORT REC II (1) H
MBI5 RE / L
CF2
7402 E32
7408 E17
+3V
7474 E15
AV2
CNRZ1 REV CRCS (1) H
CNRZ2 ERDS (1) L
CNRZ1 REV CRCS (Φ) H
CA2, DA2
AA2, BA2
+5V
AC2, AT1
BC2, BT1
CC2, CT1
DC2, DT1
C1 THRU CGΦ .01 μf
CG5, CG7, CG8 CG9 6.8 μf
CNRZ1 RD ACTV L
7400 E19
CNRZ2 FWD LRCS (2) H
7400 E22
CNRZ2 RD PLS (1) L
7408 E30
74164 E9
7408 E10
7408 E10
CNRZ1 RD STB LATE H
CNRZ1 CLK CRCS H
+3V
7474 E40
TCCM4 WRT CLK H
CNRZ2 RD PLS (1) H
7408 E30

DRN		FIRST USED ON	TM03
CHK		TITLE	TAPE CONTROL (CNRZ1)
ENG			
PROJ. ENGR			
PROD			
NEXT HIGHER ASSY.	B-BD-M8934-YA	SIZE D	CODE CS	NUMBER M8934-YA-1	REV.
SCALE		SHEET 1 OF 5	DIST.

M8934-YA-1 REV. B

THIS DRAWING AND SPECIFICATIONS, HEREIN, ARE THE PROPERTY OF DIGITAL EQUIPMENT CORPORATION AND SHALL NOT BE REPRODUCED OR COPIED OR USED IN WHOLE OR IN PART AS THE BASIS FOR THE MANUFACTURE OR SALE OF ITEMS WITHOUT WRITTEN PERMISSION.
COPYRIGHT © 1976 DIGITAL EQUIPMENT CORPORATION

CNRZ1 SHORT REC I(Φ) L
CNRZ1 SHORT REC II(Φ) H
CNRZ1 TPMK WINDOW (Φ) H
7427 E13
7405 E21
BM2
CNRZ2 ENBL SHDN CNTR L

TCCM5 SHDN B(1) H
AVI
7400 E19

+5V
R4 10K
C62 120pf
CNRZ2 ED PLS (1) H
74123 E39
BM1
CNRZ2 ERDS (1) H
AH2
CNRZ2 ERDS (Φ) H
+3V

MBI 4 INIT PLS H
DD1
TCCM 3 DRV SET PLS L
AE2
TCCM4 ERROR RESET (1) L
CL2
7474 E27
7408 E26

TCCM7 PESB L
BD1
7401 E57
DL1
CNRZ2 TMRK L
CNRZ2 TMK H
AD2
CNRZ2 ES/IL TMRK L

+3V
CNRZ1 REV CRCS (1) L
CNRZ2.5 FMK CHAR L
CNRZ2 ERDS (1) H
7474 E27
7408 E26

+3V
AU2
CNRZ2 FWD LRCS (1) H
CNRZ2 FWD LRCS (Φ) H
7474 E5
7408 E10
CNRZ1 RD RESET L

+3V
MBI 5 FWD H
AR2
AB2
CNRZ2 FWD CRCS (1) H
CNRZ1 CLK CRCS H
CNRZ2 FWD CRCS (Φ) H
7474 E5
TCCM3 READING L
BK2
7402 E11

CNRZ1 REV LRCS L
7400 E22
CNRZ2 LRCS H
CNRZ1 REV CRCS (Φ) H
7400 E12
CNRZ2 CRCS H

4 AF2
7410 E18
CNRZ2 CLK L CK CHAR REG L
6 AN2
7402 E11
CNRZ2 CHK CHAR L

+5V
R8 1K
CWD3 45IPS L
DR2
MR5 MAINT EDS L
AT2
TCCM6 EDSO H
BN2
MR5 WRP 3 L
BU2
7400 E47
7486 E58
7474 E31

+5V
Z6 5.6K
CG3 1000pf
CNRZ2 RD PLS (1) H
CNRZ2 RD PLS (1) L
74123 E39
7402 E32

CNRZ2 ERDS (1) L
CK2
7408 E34
MBI 5 GO BUF H
CNRZ1 RD STRB LATE H
TCCM7 PESB L
BD1

CNRZ2 ERDS (1) H
7405 E21
CV2
CNRZ2 EDS L

MR5 MAINT EDS L
AT2
TCCM7 PESB L
BD1
7402 E11
7405 E21

REVISIONS		
CHK	CHANGE NO.	REV.

TITLE	SIZE	CODE	NUMBER	REV.
TAPE CONTROL (CNRZ2)	D	CS	M8934-YA-1	*
SCALE —	SHEET 2 OF 5	DIST.		

THIS DRAWING AND SPECIFICATION, WHETHER PATENTABLE OR NOT, IS THE PROPERTY OF DIGITAL EQUIPMENT CORPORATION AND MAYNARD, MASS. IT IS ISSUED IN STRICT CONFIDENCE AND SHALL NOT BE REPRODUCED OR COPIED OR LENT OR ASSIGNED NOR SHALL ITS CONTENTS BE DISCLOSED OR MADE USE OF IN WHOLE OR IN PART EXCEPT AS THE WRITTEN AUTHORIZATION OF DIGITAL EQUIPMENT CORPORATION SHALL HAVE BEEN OBTAINED IN ADVANCE.
COPYRIGHT © 1977 DIGITAL EQUIPMENT CORPORATION

MBI5 WRITE H
MR5 WRP4 L
MBI5 FWD H
CS:
DB1
AE2
CNRZ3 CRC H
CNRZ3 CYCLE(3)1 L
+5V
RG 1K
ENABLE EZZOR CORRECTION
W1
TCCM4 SPACE L
DP1
DK2
CYCLE 1(1) H
CU1
CYCLE 2(1) H
CNRZ3 ENBL CYCLE 2 H
MBIT REV H
CD2
MBIG DRV SET PLS H
AS2
MBI9 INIT PLS(1) L
DD2
CWD3 SAC L
DB2
TCCM4 SPACE L
DP1
+3V
MBI5 GO BUFF H
CK2
CR1
CNRZ3 CYCLE 3(1) H
CNRZ3 CYCLE 3(1) L
CNRZ3 CYCLE 2(1) L
CNRZ3 CYCLE 2 & 3 H
R3 100
CG4 680 pF
+5V
R5 220
+3V
CG1 .01 µF
+CG6 6.8 µF
R7 330
TCCM2 XWD P H
BF4 WDBFO 7(1) H
BF4 WDBFO 6(1) H
BF4 WDBFO 5(1) H
TCCM2 XWD 4 H
BF4 WDBFO 3(1) H
BF4 WDBFO 2(1) H
BF4 WDBFO 1(1) H
BF4 WDBFO ϕ(1) H
TCCM4 WDR(1) H
CNRZ3 CRC P(1) H
CNRZ3 CRC 7(1) H
CNRZ3 CRC 6(1) H
CNRZ3 CRC 5(1) H
CNRZ3 CRC 4(1) H
CNRZ3 CRC 3(1) H
CNRZ3 CRC 2(1) H
CNRZ3 CRC 1(1) H
CNRZ3 CRC ϕ(1) H
TCCM7 PESB L
TCCM5 EOE L
MBI5 DRV SET PLS H
MR5 WRP 4 L
MR5 WRP 3 L
TCCM4 CRC STRB H
TCCM4 WB CLK H
TCCM4 LRC STRB(16) L
BF5 SET VPAR L
TCCM4 SPACE L
SCAL SET VPE H
CNRZ5 PARITY ERROR L
CNZZ1 REV CRCS H
CNRZ4 CLK VPE L
CNRZ 2 TMK H
CNRZ4 CRC ERROR H
CNRZ4 REV CRCE ENBL H
CNRZ2 FWD LRCS(ϕ) H
CNRZ4 CRC ERROR L
CNRZ2 ERRS(1) H
TCCM7 PESB L
MR5 WRP 3 L
CNRZ2 FWD LRCS(1) L
CNRZ4 LRCC MATCH H
TCCM5 SHDN=8(1) H
TCCM4 ERROR RESET(1) L
CL2
DF1
CNRZ3 INC/VPE L
DV2
CNRZ3 CORR/CRC L
CNRZ3 CRC H
DV2
CNRZ3 PEF/LRC L

REVISIONS		
CHK	CHANGE NO.	REV.

TITLE	SIZE	CODE	NUMBER	REV.
TAPE CONTROL (CNRZ3)	D	CS	M8934-YA-1	*
SCALE —	SHEET 3 OF 5	DIST.		

THIS DRAWING AND SPECIFICATIONS, HERein, ARE THE PROPERTY OF DIGITAL EQUIPMENT CORPORATION AND SHALL NOT BE REPRODUCED OR COPIED OR USED IN WHOLE OR IN PART AS THE BASIS FOR THE MANUFACTURE OR SALE OF ITEMS WITHOUT WRITTEN PERMISSION.
COPYRIGHT © 1977 DIGITAL EQUIPMENT CORPORATION

CNRZ4 CRC ERROR H

74Φ4 E48 — CNRZ4 CRC ERROR L

CNRZ3 CYCLE 2(1) H

CNRZ2 ERDS(1) H

74ΦΦ E45

74ΦΦ E24

CNRZ3 CYCLE 2+3 H

+3V

74161 E50 — D3 D2 D1 D0 — R3(1) R2(1) R1(1) R0(1) — CLR LD CLK CNT EN CRY EN — CΦ

DJZ

7442 E55

CNRZ4 INC ERROR L

CNRZ4 TRK 4 ERR L
CNRZ4 TRK 7 ERR L
CNRZ4 TRK 6 ERR L
CNRZ4 TRK 5 ERR L
CNRZ4 TRK 3 ERR L
CNRZ4 TRK 9 ERR L
CNRZ4 TRK 1 ERR L
CNRZ4 TRK 8 ERR L
CNRZ4 TRK 2 ERR L

85ΦΦ E3 — CNRZ5 CRC P H, CRC 7 H, CRC 6 H, CRC 5 H, RD 4 H, CRC 3 H, CRC 2 H, CRC 1 H, CRC Φ H — DP DΦ D1 D2 D3 D4 D5 D6 D7 — CDP CDΦ CD1 CD2 CD3 CD4 CD5 CD6 CD7 — WE C R

85Φ1 E4 — CDP CDΦ CD1 CD2 CD3 CD4 CD5 CD6 CD7 — VEC R C ED

CNRZ3 CYCLE 2(1) L

CNRZ5 VEC H

CNRZ5 LECS L

74Φ8 E25

74Φ2 E23

CNRZ3 ENBL CYCLE 2 H

74Φ8 E28

CNRZ3 CYCLE 3(1) H

CNRZ4 CLK VPE L

CNRZ3 CYCLE 3(1) L

74ΦΦ E47

CNRZ4 LECC MATCH H

MATCH 85Φ2 E38 — CNRZ5 RD P H, RD 7 H, RD 6 H, RD 5 H, RD 4 H, RD 3 H, RD 2 H, RD 1 H, RD Φ H — DP DΦ D1 D2 D3 D4 D5 D6 D7 — QP QΦ Q1 Q2 Q3 Q4 Q5 Q6 Q7 — R CLK M

MBIG DEV SET PLS H

MBSILCC L

ASZ

DMI

74ΦΦ E19

74Φ4 E3Φ

CNRZ2 ERDS(Φ)H

+3V

CNRZ5 RD P H
CNRZ5 RD Q H
CNRZ5 RD 7 H
CNRZ5 RD : H
CNRZ5 RD 6 H
CNRZ5 RD 2 H
CNRZ5 RD 5 H
CNRZ5 RD 3 H

74157 E1 — A0 B0 A1 B1 A2 B2 A3 B3 STB S0 — f0 f1 f2 f3

CNRZ4 CRC P H
CNRZ4 CRC 7 H
CNRZ4 CRC 6 H
CNRZ4 CRC 5 H

74157 E2 — A0 B0 A1 B1 A2 B2 A3 B3 STB S0 — f0 f1 f2 f3

CNRZ4 CRC 3 H
CNRZ4 CRC 2 H
CNRZ4 CRC 1 H
CNRZ4 CRC ΦH

CNRZ3 CYCLE 2(1) L

MBI 7 REV H

CD2

74Φ8 E34

CNRZ4 REV CRCC ENBL H

REVISIONS		
CHK	CHANGE NO.	REV.

TITLE	SIZE	CODE	NUMBER	REV.
TAPE CONTROL (CNRZ4)	D	DCS	M 8934-YA-1	*
SCALE —	SHEET 4 OF 5	DIST.		

M 8934-YA-1

THIS DRAWING AND SPECIFICATIONS, HEREIN, ARE THE PROPERTY OF DIGITAL EQUIPMENT CORPORATION AND SHALL NOT BE REPRODUCED OR COPIED OR USED IN WHOLE OR IN PART AS THE BASIS FOR THE MANUFACTURE OR SALE OF ITEMS WITHOUT WRITTEN PERMISSION.
COPYRIGHT © 1977 DIGITAL EQUIPMENT CORPORATION

T4175 E46
T4174 E41
T74180 E51
7400 E33
7402 E59
7404 E48
7405 E37
7408 E34
7410 E28
7430 E43
7432 E28
7440 E42
7486 E52
7430 E56

TCCMG RDA P H
MEMS WRP4 L
CNEEZ CRCS H
CNEE5 RD LATCH P(i) L
CNEE5 RD LATCH T(i) L
CNEE5 RD LATCH G(i) L
CNEE5 RD LATCH 5(i) L
CNEE5 RD LATCH 4(i) H
CNEE5 RD LATCH 1(i) H
CNEE5 RD LATCH ϕ(i) H
CNEE5 RD LATCH 3(i) H
CNEE5 RD LATCH 2(i) H
TCCMG RDA 7 H
TCCMG RDA 6 H
TCCMG RDA 5 H
DN2
CNEE5 FMK CHAR L
TCCMG RDA 4 H
TCCMG RDA 3 H
TCCMG RDA 2 H
TCCMG RDA 1 H
TCCMG RDA ϕ H
TCCM7 PESB L
CNEE2 RD PLS(i) H
CNEE4 TRK 7 ERR L
CNEE4 TRK 6 ERR L
CNEE4 TRK 5 ERR L
CNEE4 TRK 3 ERR L
CNEE4 TRK 9 ERR L
CNEE4 TRK 1 ERR L
CNEE4 TRK 8 ERR L
CNEE4 TRK 2 ERR L
CNEE4 TRK 4 ERR L
CNEE5 RD 7 H
CNEE5 RD 6 H
CNEE5 RD 5 H
CNEE5 RD 4 H
CNEE5 RD 3 H
CNEE5 RD 2 H
CNEE5 RD 1 H
CNEE5 RD ϕ H
CNEE5 RD P H
CL1 CNEE5 RDB 7 L
CK1 CNEE5 RDB 6 L
CJ1 CNEE5 RDB 5 L
CF1 CNEE5 RDB 4 L
CV1 CNEE5 RDB 3 L
CD1 CNEE5 RDB 2 L
CP1 CNEE5 RDB 1 L
CE1 CNEE5 RDB ϕ L
CH1 CNEE5 RDB P L
CNEE2 CRCS H
CNEE5 RD PAR ODD H
BUI CNEE5 B PAR L
CNEE3 CYCLE 3(i) L
CNEE5 PARITY ERROR L
CNEE5 VEC H
CNEE2 LRCS H
CNEE5 LRCS L
DAI MEGPVN (i) H
CNEE2 CHK CHAR L
CNEE2 EEDS(ϕ) H
CK2 MBIS GO BUF(i) H
CNEE5 READ PAR ODD H

REVISIONS		
CHK	CHANGE NO.	REV.

TITLE TAPE CONTROL (CNRE5)
SIZE D CODE DCS NUMBER M8934-YA-1 REV. *
SCALE SHEET 5 OF 5 DIST.

DCS M8934-YA-1 REV. 4

DIGITAL EQUIPMENT CORPORATION

PARTS LIST

MADE BY D DESCOTEAUX	CHECKED S Chlypanka	SECTION 1
DATE 11-29-77	DATE 11-30-77	
ENG James Doyle	PROD R. Gauthier	ISSUED SECTION 1
DATE 12-12-77	DATE 12-14-77	

NOTES:
USED ON OPTION/MODEL
TM03

ITEM NO.	DRAWING NO.	PART NO.	DESCRIPTION	QUANTITY/VARIATION M8934-YA	REF DESIGNATION
	D-CS-M8934-YA-1		CIRCUIT SCHEMATIC	REF	
	D-UA-M8934-YA-Ø		UNIT ASSEMBLY	REF	
	B-DD-M8934-YA		DWG DIRECTORY	REF	
1	D-MD-5012400-0-0	5012400	ETCHED CIRCUIT BOARD	1	
2		10-00016-00	CAP 100PF 100V	1	C63
3		10-00018-00	CAP 120PF 100V	1	C62
4		10-00026-00	CAP 680PF 100V	1	C64
5		10-01610-01	CAP .01UF 100V DISC	61	C1 thru C61
6		10-05306-00	CAP 6.8UF 35V 10%	5	C65 thru C69
7		13-00229-00	RES 100 ¼W 5%	1	R3
8		13-00271-00	RES 220 ¼W 5%	1	R5
9		13-00295-00	RES 330 ¼W 5%	1	R7
10		13-00365-00	RES 1K ¼W 5%	3	R1,R2,R8
11		13-00479-00	RES 10K ¼W 5%	1	R4
12		13-01874-00	RES 5.6K ¼W 5%	1	R6
13		19-05547-00	I.C. DEC 7474	9	E5,E14,E15,E16,E27,E29,E44,E31,E40
14		19-05575-00	I.C. DEC 7400	6	E12,E19,E22,E42,E45,E47
15		19-05576-00	I.C. DEC 7410	2	E8,E18
16		19-05577-00	I.C. DEC 7420	1	E24

E.C.O. NO.

THIS DRAWING AND SPECIFICATIONS, HEREIN, ARE THE PROPERTY OF DIGITAL EQUIPMENT CORPORATION AND SHALL NOT BE REPRODUCED OR COPIED OR USED IN WHOLE OR IN PART AS THE BASIS FOR THE MANUFACTURE OR SALE OF ITEMS WITHOUT WRITTEN PERMISSION COPYRIGHT © 1977 DIGITAL EQUIPMENT CORPORATION

TITLE: TAPE CONTROL NRZI

ASSY NO. D-UA-M8934-YA-Ø

SHEET 1 OF 3

SIZE	CODE	NUMBER	REV.
B	PL	M8934-YA-Ø	*

INSERTION PARTS LIST DATA BASE REV A

DIGITAL EQUIPMENT CORPORATION
PARTS LIST

MADE BY / DATE | CHECKED / DATE | SECTION
ENG / DATE | PROD / DATE | ISSUED SECTION

NOTES: USED ON OPTION/MODEL TM03

ITEM NO.	DRAWING NO.	PART NO.	DESCRIPTION	QUANTITY/VARIATION	REF DESIGNATION
17		19-05578-00	I.C. DEC 7430	1	E56
18		19-05590-00	I.C. DEC 7401	1	E57
19		19-09004-00	I.C. DEC 7402	6	E11,E23,E32,E33,E53,E59
20		19-09686-00	I.C. DEC 7404	2	E30,E48
21		19-09930-00	I.C. DEC 7405	3	E21,E37,E36
22		19-10011-00	I.C. DEC 7486	4	E43,E52,E54,E58
23		19-10035-00	I.C. DEC 74197	1	E20
24		19-10046-00	I.C. DEC 7442	1	E55
25		19-10155-00	I.C. DEC 7408	7	E10,E17,E25,E26,E34,E49,E60
26		19-10436-00	I.C. DEC 74123	1	E39
27		19-10650-00	I.C. DEC 74161	2	E7,E50
28		19-10655-00	I.C. DEC 74157	2	E1,E2
29		19-10878-00	I.C. DEC 7427	1	E13
30		19-11521-00	I.C. DEC 7432	1	E28
31		19-13750-00	I.C. MC 8500	2	E3,E6
32		19-13751-00	I.C. MC 8501	1	E4
33		19-13749-00	I.C. MC 8502	1	E38
34		90-06732-00	EYELET	8	
35		90-08337-06	HANDLE, FLIP CHIP, MAGNETA	4	

E.C.O. NO.

THIS DOCUMENT AND SPECIFICATIONS, HEREIN, ARE THE PROPERTY OF DIGITAL EQUIPMENT CORPORATION AND SHALL NOT BE REPRODUCED OR COPIED OR USED IN WHOLE OR IN PART AS THIS IS FOR THE MANUFACTURE OR SALE OF ITEMS WITHOUT WRITTEN PERMISSION.
COPYRIGHT © 1977 DIGITAL EQUIPMENT CORPORATION

DRB 125

TITLE: TAPE CONTROL NRZ1

ASSY NO. D-UA-M8934-YA-Ø | SIZE B | CODE PL | NUMBER M8934-YA-Ø | REV. *

SHEET 2 OF 3

INSERTION PARTS LIST DATA BASE REV A

DIGITAL EQUIPMENT CORPORATION

PARTS LIST

MADE BY
DATE
ENG
DATE

CHECKED
DATE
PROD
DATE

SECTION 1
ISSUED SECTION 1

NOTES:
USED ON OPTION/MODEL
TM03

ITEM NO.	DRAWING NO.	PART NO.	DESCRIPTION	QUANTITY/VARIATION M8934-YA	REF DESIGNATION
36		90-09185-00	INSULATED JUMPERS	3	W1,W2,W3
37		19-10651-00	I.C. 74175	1	E46
38		19-10652-00	I.C. 74174	1	E41
39		19-10724-00	I.C. 74180	1	E51
40		9105740-55	WIRE, #30 AWG, GRN	AR	
41		19-10041	I.C. 74164	1	E9

DRAWINGS AND SPECIFICATIONS, HEREIN, ARE THE PROPERTY OF DIGITAL EQUIPMENT CORPORATION AND SHALL NOT BE REPRODUCED OR COPIED OR USED IN WHOLE OR IN PART AS THE BASIS FOR THE MANUFACTURE OR SALE OF ITEMS WITHOUT WRITTEN PERMISSION. COPYRIGHT © 1977, DIGITAL EQUIPMENT CORPORATION

3251 DRB 125

TITLE: TAPE CONTROL NRZ1

ASSY NO. D-UA-M8934-YA-Ø
SHEET 3 OF 3

SIZE B | CODE PL | NUMBER M8934-YA-Ø | REV. *

INSERTION PARTS LIST DATA BASE REV A

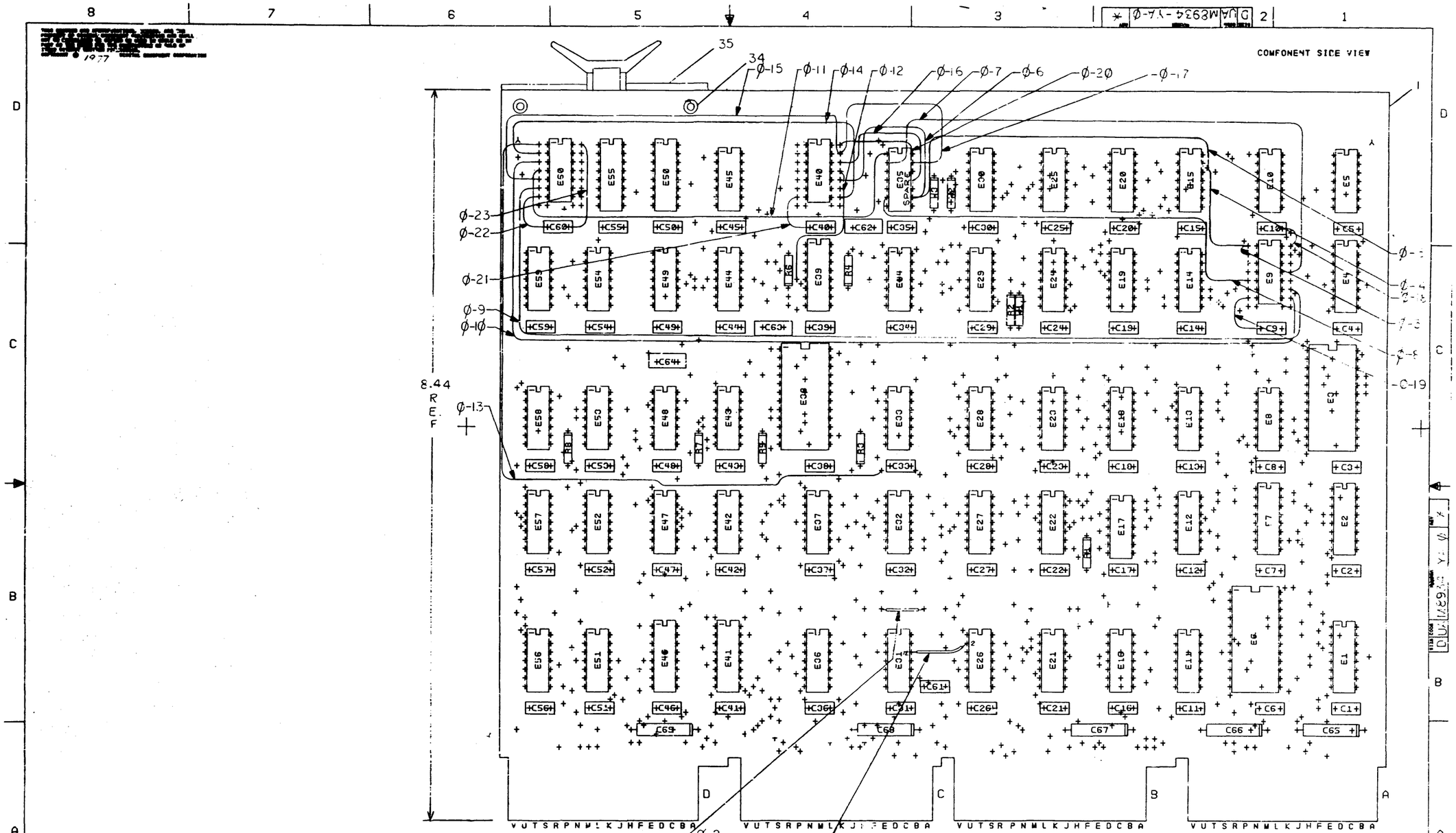

NOTES:

FOR PARTS LIST REFER TO B-PL-M8934-YA-Ø

CHK	CHANGE	NO	REV

ETCH REV.	B
P.C. DESIGN DATA BASE REV.	BL

SIGNATURES	DATE
DRN.	
CHK'D	
ENG.	
PROJ. ENG	
PROD.	
SCALE 2/1	
SHT. 1 OF 4	
NEXT HIGHER ASSY. B-DD-M8934-YA	

digital

TITLE TAPE CONTROL NRZI

SIZE	CODE	NUMBER	REV
D	UA	M8934-YA-Ø	*

Drawings and specifications, herein, are the property of Digital Equipment Corporation and shall not be reproduced or copied or used in whole or in part as the basis for the manufacture or sale of items without written permission. COPYRIGHT © 1973
DIGITAL EQUIP. CORP.

NOTES:

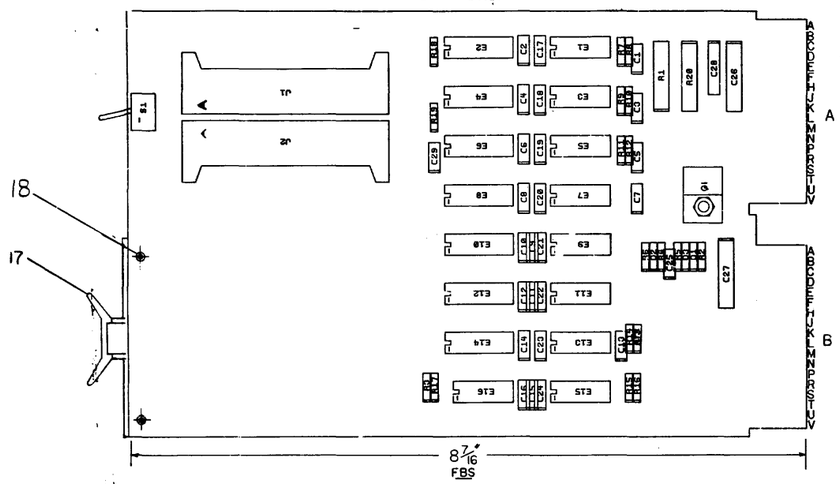

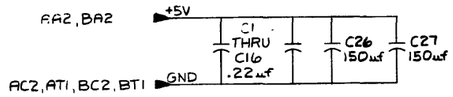

DEC T5107B	13	7	14
DEC T5108B	13	7	14
DEC T5113	—	8	16
IC TYPE	-5V	GND	+5V

GND AND 5V ARE USUALLY PIN 7 AND 14 RESPECTIVELY. EXCEPTIONS ARE STATED ABOVE

IC PIN LOCATIONS

REF				
REF		X-Y COORDINATE HOLE LOCATION	X-CO-M5903-0-4	1
REF		ASSY/DRILLING HOLE LAYOUT	D-AH-M5903-0-5	2
REF		MODULE ECO HISTORY	B-MH-M5903-0-6	3
1		ETCHED CIRCUIT BOARD	5010502	4
28	C1 THRU C25, C29	CAP. .22 µf 50V 20%	1010274	5
1	C28	CAP. 68 µf 35V 10%	1005306	6
1	D1	DIODE 1N4733A 5.1V	1109943	7
2	D2, D3	DIODE D672	1105275	8
				9
2	R4, R18	RES. 330 1/4W 5%	1300295	10
2	R5, R19	RES. 750 1/4W 5%	1301401	11
1	R6	RES. 4.7K 1/4W 5%	1300447	12
2	J1, J2	CONN. SCOTCH FLEX 3432-1002	1209941-02	13
				14
7	E2, E4, E6, E8, E10, E12, E14	I.C. DEC 75113	1911361	15
9	E1, 3, 5, 7, 9, 11, 13, 15, 16	I.C. DEC 75108B	1910725	16
1		HANDLE, FLIP CHIP MAGENTA	9008337-6	7
2		EYELET	9006732	18
				19
				20
2	C26, C27	CAP. 150µf 6V 20%	1005572	21
1	S1	SWITCH	1210208	22
2	R1, R20	RES. 68, 2W, 5%	1302308	23
1	R2	RES. 470, 1/4 W, 5%	1300516	24
1	Q1	TRANS 2N6490	1512652-01	25
1		SCREW PHM 4-40 X 1/4	9008301-01	26
1		NUT, KEP 4-40	9006557	27
12	R3, R7 - R17	RES, 3.3K, 1/4W, 5%	1300439	28
4		LEFT LATCH	1209941-03	29
4		RIGHT LATCH	1209941-04	30
A/R		THERMAL COMPOUND	9008268	31

QTY	REF DESIGNATION	DESCRIPTION	PART NO.	ITEM NO.

PARTS LIST

FIRST USED ON OPTION MODEL: RH11

ETCH BOARD REV: H

DEC NO.	EIA NO.
D672	IN 3683
LN4733A	NONE

SEMICONDUCTOR CONVERSION CHART

NEXT HIGHER ASSY

SCALE: NONE
SHEET: 1 OF 2

DRAWN: K. AMUNDSEN 3/13/74
CHECKED: D. POTTER 3-18-74
ENGR: D. POTTER 4-15-74
MFG: D. POTTER 7 JAN 74
QA: D. POTTER 11/21/74

REV	CHANGE NO.	CHK	ORIGINATED
J			
H			
F			
E			
D			

REVISIONS

[redacted] EQUIPMENT CORPORATION
MAYNARD, MASSACHUSETTS

TITLE: DRIVE TRANSCEIVER

SIZE: D | NUMBER: DCS M5903-0-1 | REV: E

DIST: B

"THIS DRAWING AND SPECIFICATIONS, HEREIN, ARE THE PROPERTY OF DIGITAL EQUIPMENT CORPORATION AND SHALL NOT BE REPRODUCED OR COPIED OR USED IN WHOLE OR IN PART AS THE BASIS FOR THE MANUFACTURE OR SALE OF ITEMS WITHOUT WRITTEN PERMISSION.
COPYRIGHT © 1973, DIGITAL EQUIPMENT CORPORATION"

REC ENAB COM 2 AJ1 — DATA OUT 1 AD1 — DATA OUT 2 AB1 — DATA OUT 3 AK1 — DATA OUT 4 AF1 — DATA OUT 5 AM1 — DATA OUT 6 AL1 — DATA OUT 7 AS1 — DATA OUT 8 AN1

DATA IN 1 AE1 — TRANS ENAB COM 1 AB1 — DATA IN 2 AC1 — DATA IN 3 AM2 — DATA IN 4 AL2 — DATA IN 5 AP2 — DATA IN 6 AN2 — DATA IN 7 AU1 — TRANS ENAB COM 2 AU2 — TRANS ENAB COM 3 BS2 — DATA IN 8 AT2

REC ENAB COM 3 (AP1) — DATA OUT 9 BA1 — DATA OUT 10 AV1 — DATA OUT 11 BE1 — DATA OUT 12 BC1 — DATA OUT 13 BF1 — DATA OUT 14 BH1 — DATA OUT 15 BJ1 — DATA OUT 16 BV2 — DATA OUT 17 BR1 — DATA OUT 18 BP1

DATA IN 9 BB1 — TRANS ENAB COM 4 (BS2) — DATA IN 10 AV2 — DATA IN 11 BJ2 — DATA IN 12 BD1 — TCPA BF2 — DATA IN 13 BP2 — TRANS ENAB COM 5 BM1 — DATA IN 14 BL2 — TRANS ENAB COM 6 BJ1 — REC ENAB COM 4 BK1 — REC ENAB COM 5 BH1 — REC ENAB COM 7 BK1 — REC ENAB COM 8 BN1

S1 ENABLE OFF — (BR2) +3V — R5 750 — C25 .22µF — R4 330 — -5V — C17 THRU C24 .22µF — Q1 2N4940 — R2 470 — D1 1N4733A — D3 D672 — R1 68, 2W, 5% — R20 68, 2W, 5% — AB2 -15V — C28 6.8µF — (AA2, BA2) +5V — (AC2, AT1, BC2, BT1) GND — C29 .22UF — R18 330 — R19 750 — +3V(A)

J1 J2 — V V U U T T S S R R P P X N N M M L L K K J J H H F F E E D D C C B B A A Z — A B C D E F Y H J K L M N P R S T U V W

J1 J2 — Y V U T S R P W N M L K J H F E D C B A — X AA BB CC DD EE FF Z HH JJ KK LL MM NN PP RR SS TT UU VV

D2 D672 — +5V — P6 4.7 K — BT2

REVISIONS		
CHK	CHANGE NO.	REV.

TITLE	SIZE	CODE	NUMBER	REV.
DRIVE TRANSCEIVER	D	CS	M5903-0-1	K
SCALE NONE — SHEET 2 OF 2	DIST.			

DEC FORM NO. DMD 139

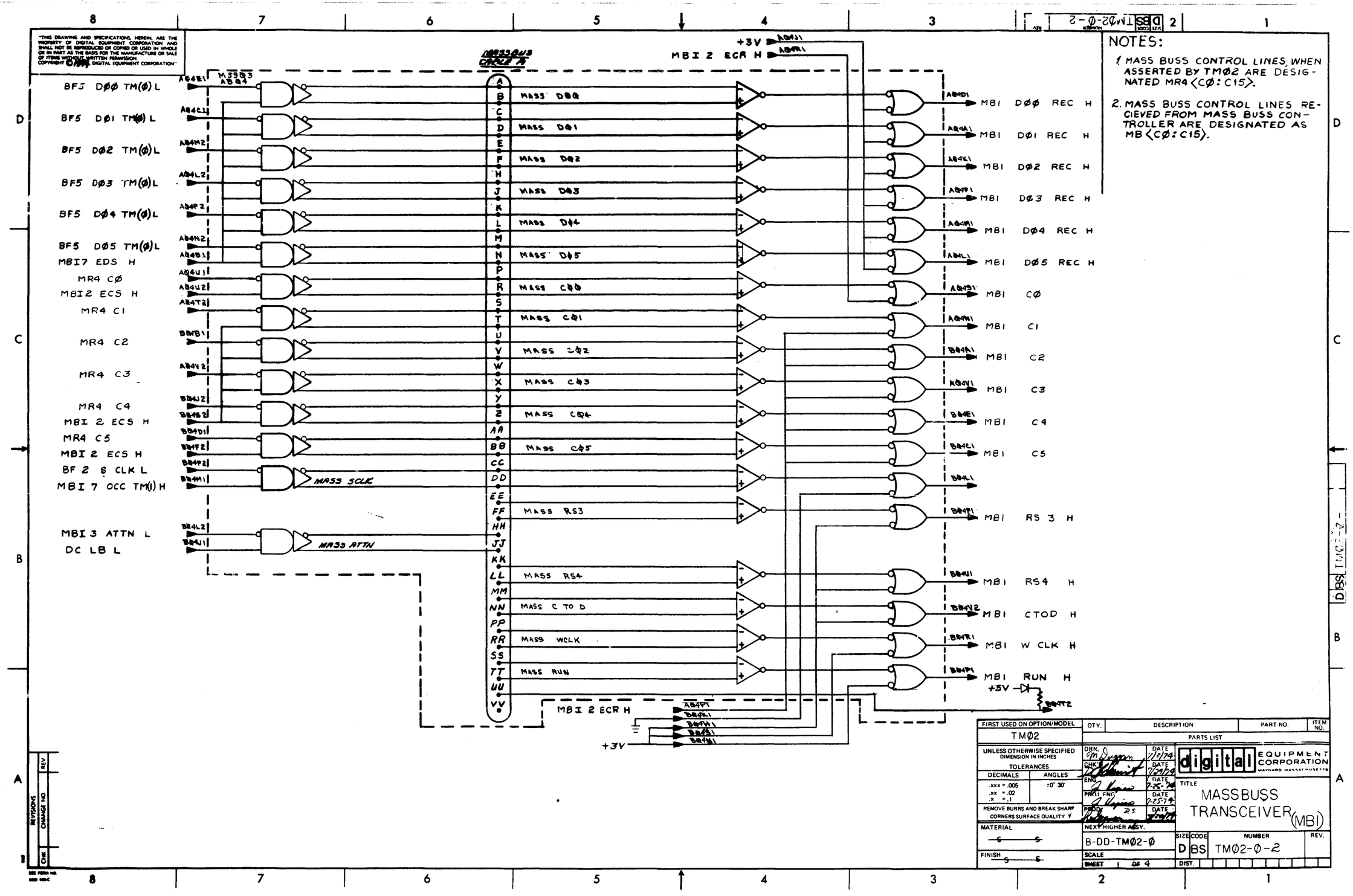

NOTES:

1. MASS BUSS CONTROL LINES, WHEN ASSERTED BY TMØ2 ARE DESIGNATED MR4 <CØ:C15>.
2. MASS BUSS CONTROL LINES RECIEVED FROM MASS BUSS CONTROLLER ARE DESIGNATED AS MB <CØ:C15>.

FIRST USED ON OPTION/MODEL	QTY.	DESCRIPTION	PART NO.	ITEM NO.
TMØ2		PARTS LIST		

UNLESS OTHERWISE SPECIFIED DIMENSION IN INCHES
TOLERANCES
DECIMALS .xxx = .005 .xx = .02 .x = .1
ANGLES ±0° 30'
REMOVE BURRS AND BREAK SHARP CORNERS SURFACE QUALITY √
MATERIAL
FINISH

DRN. M. Duggan DATE 7/3/74
CHK'D DATE 7/29/74
ENG DATE 7-25-74
PROJ. ENG DATE 7-25-74
PROD. D.S. DATE 7/29/74

NEXT HIGHER ASSY. B-DD-TMØ2-Ø
SCALE
SHEET 1 OF 4

digital EQUIPMENT CORPORATION MAYNARD MASSACHUSETTS

TITLE MASSBUSS TRANSCEIVER (MBI)

SIZE D CODE BS NUMBER TMØ2-Ø-2 REV.
DIST.

REVISIONS CHANGE NO REV CHK

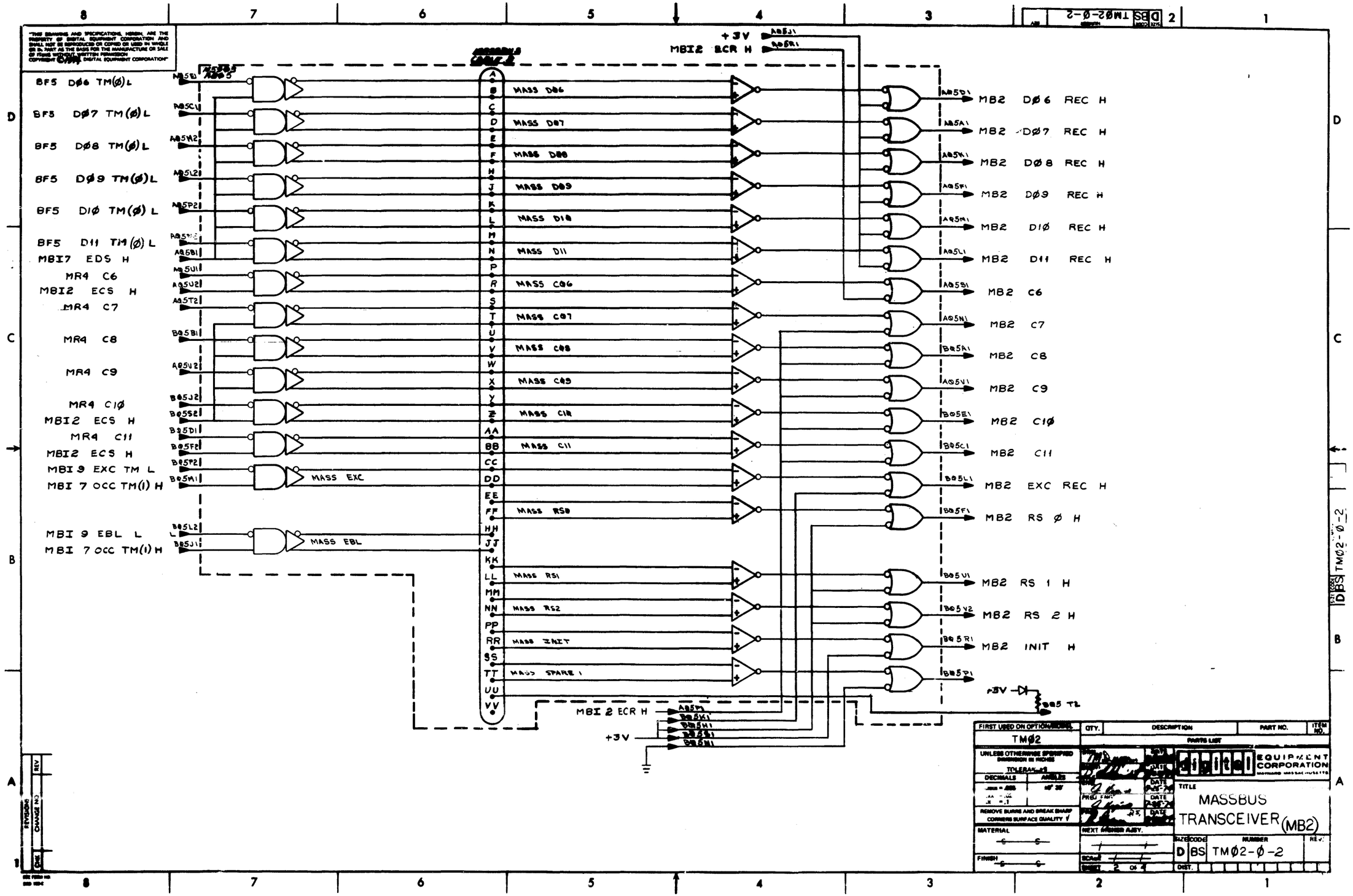

BF5 DØ6 TM(Ø)L
BF5 DØ7 TM(Ø)L
BF5 DØ8 TM(Ø)L
BF5 DØ9 TM(Ø)L
BF5 D1Ø TM(Ø) L
BF5 D11 TM(Ø) L
MBI7 EDS H
MR4 C6
MBI2 ECS H
MR4 C7
MR4 C8
MR4 C9
MR4 C1Ø
MBI2 ECS H
MR4 C11
MBI2 ECS H
MBI 9 EXC TM L
MBI 7 OCC TM(1) H
MBI 9 EBL L
MBI 7 OCC TM(1) H
MASS EXC
MASS EBL
MASS DØ6
MASS DØ7
MASS DØ8
MASS DØ9
MASS D1Ø
MASS D11
MASS CØ6
MASS CØ7
MASS CØ8
MASS CØ9
MASS C1Ø
MASS C11
MASS RSØ
MASS RS1
MASS RS2
MASS INIT
MASS SPARE 1
+3V
MBI2 ECR H
MB2 DØ6 REC H
MB2 DØ7 REC H
MB2 DØ8 REC H
MB2 DØ9 REC H
MB2 D1Ø REC H
MB2 D11 REC H
MB2 C6
MB2 C7
MB2 C8
MB2 C9
MB2 C1Ø
MB2 C11
MB2 EXC REC H
MB2 RS Ø H
MB2 RS 1 H
MB2 RS 2 H
MB2 INIT H
MBI 2 ECR H
+3V
FIRST USED ON OPTION/MODEL
TMØ2
QTY.
DESCRIPTION
PART NO.
ITEM NO.
PARTS LIST
UNLESS OTHERWISE SPECIFIED DIMENSION IN INCHES
TOLERANCES
DECIMALS
ANGLES
REMOVE BURRS AND BREAK SHARP CORNERS SURFACE QUALITY
MATERIAL
FINISH
NEXT HIGHER ASSY.
SCALE
SHEET 2 OF 4
digital EQUIPMENT CORPORATION
MAYNARD MASSACHUSETTS
TITLE
MASSBUS TRANSCEIVER (MB2)
SIZE CODE
D BS
NUMBER
TMØ2-Ø-2
REV.
DIST.

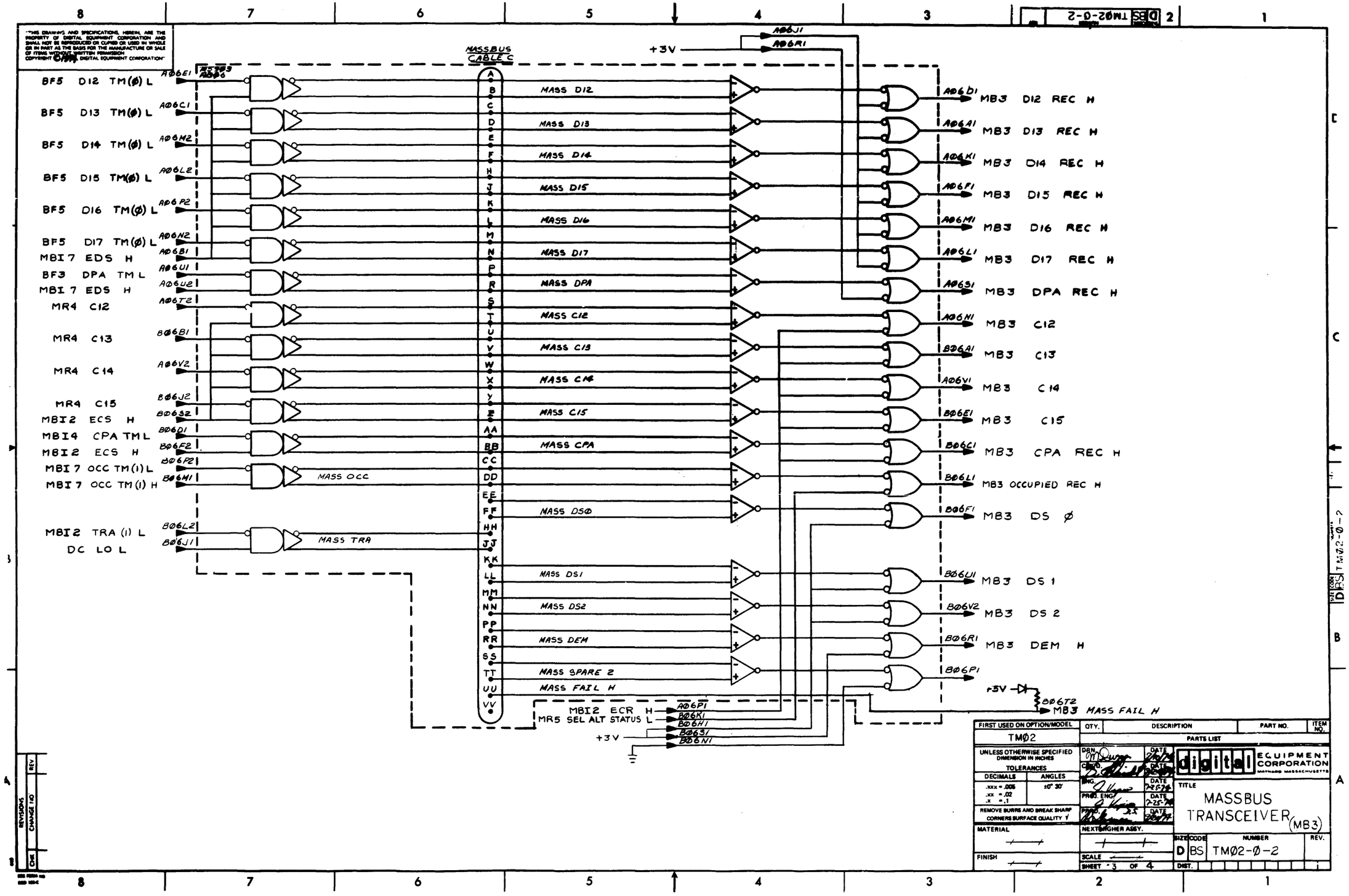

MASSBUS CABLE C
+3V
BF5 D12 TM(Ø) L
BF5 D13 TM(Ø) L
BF5 D14 TM(Ø) L
BF5 D15 TM(Ø) L
BF5 D16 TM(Ø) L
BF5 D17 TM(Ø) L
MBI7 EDS H
BF3 DPA TM L
MBI 7 EDS H
MR4 C12
MR4 C13
MR4 C14
MR4 C15
MBI2 ECS H
MBI4 CPA TM L
MBI2 ECS H
MBI 7 OCC TM(1) L
MBI 7 OCC TM(1) H
MBI2 TRA (1) L
DC LO L
MASS D12
MASS D13
MASS D14
MASS D15
MASS D16
MASS D17
MASS DPA
MASS C12
MASS C13
MASS C14
MASS C15
MASS CPA
MASS OCC
MASS DSØ
MASS TRA
MASS DS1
MASS DS2
MASS DEM
MASS SPARE 2
MASS FAIL H
MBI2 ECR H
MR5 SEL ALT STATUS L
MB3 D12 REC H
MB3 D13 REC H
MB3 D14 REC H
MB3 D15 REC H
MB3 D16 REC H
MB3 D17 REC H
MB3 DPA REC H
MB3 C12
MB3 C13
MB3 C14
MB3 C15
MB3 CPA REC H
MB3 OCCUPIED REC H
MB3 DS Ø
MB3 DS 1
MB3 DS 2
MB3 DEM H
MB3 MASS FAIL H
FIRST USED ON OPTION/MODEL
TMØ2
UNLESS OTHERWISE SPECIFIED DIMENSION IN INCHES
TOLERANCES
DECIMALS
ANGLES
REMOVE BURRS AND BREAK SHARP CORNERS SURFACE QUALITY
MATERIAL
FINISH
NEXT HIGHER ASSY.
SCALE
SHEET 3 OF 4
QTY.
DESCRIPTION
PART NO.
ITEM NO.
PARTS LIST
digital EQUIPMENT CORPORATION
MAYNARD MASSACHUSETTS
TITLE
MASSBUS TRANSCEIVER (MB3)
SIZE D
CODE BS
NUMBER TMØ2-Ø-2
REV.
DIST.

"THIS DRAWING AND SPECIFICATIONS, HEREIN, ARE THE PROPERTY OF DIGITAL EQUIPMENT CORPORATION AND SHALL NOT BE REPRODUCED OR COPIED OR USED IN WHOLE OR IN PART AS THE BASIS FOR THE MANUFACTURE OR SALE OF ITEMS WITHOUT WRITTEN PERMISSION.
COPYRIGHT © 1974, DIGITAL EQUIPMENT CORPORATION"

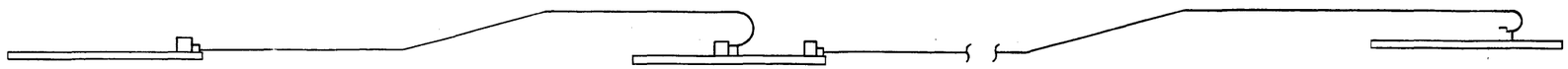

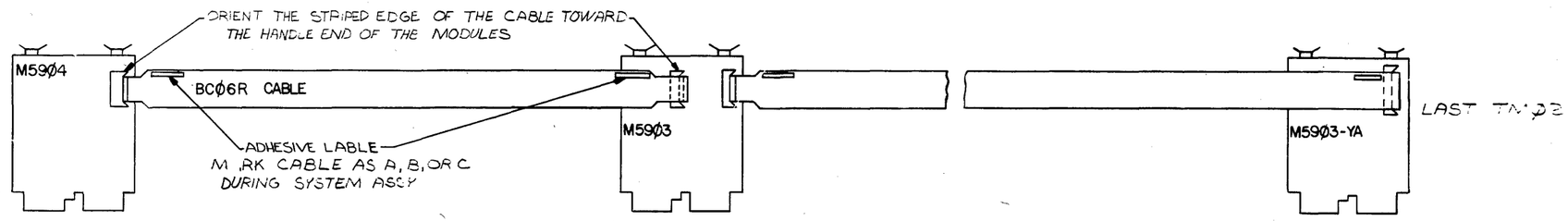

IN THE RH-11 MASSBUS CONTROLLER
SLOT 4 IS FOR CABLE A
SLOT 5 IS FOR CABLE B
SLOT 6 IS FOR CABLE C
IN THE RH 1Ø MASSBUS CONTROLLER
SLOT 30 IS FOR CABLE A
SLOT 31 IS FOR CABLE B
SLOT 32 IS FOR CABLE C

IN THE TMØ2 TAPE CONTROLLER
SLOT 4 IS FOR CABLE A
SLOT 5 IS FOR CABLE B
SLOT 6 IS FOR CABLE C

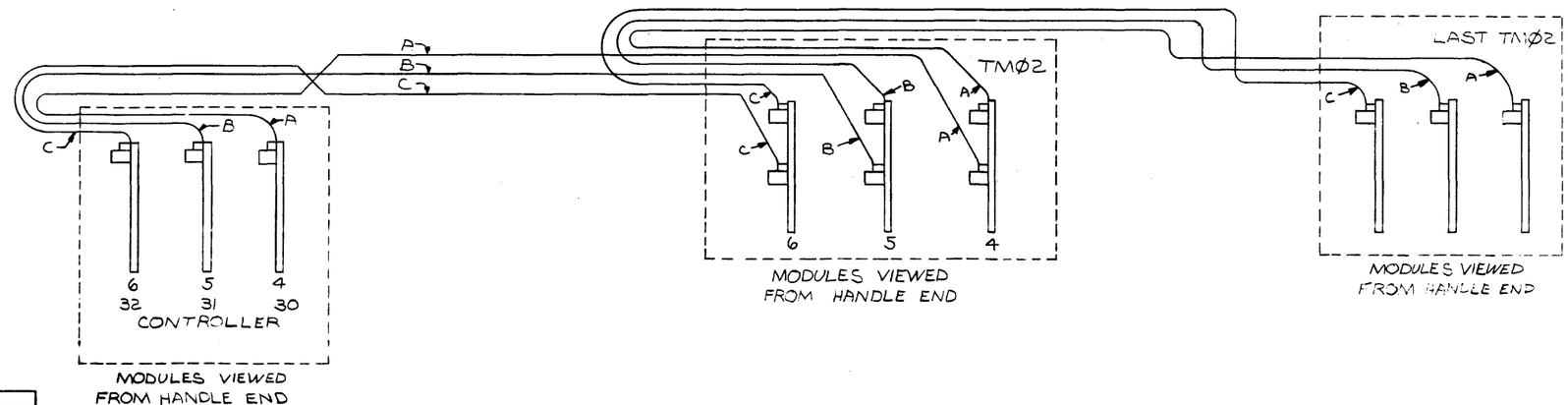

REVISIONS		
CHK	CHANGE NO.	REV.

TITLE	SIZE	CODE	NUMBER	REV.
TMØ2 MASSBUS TRANSCEIVER	D	BS	TMØ2-Ø-2	
SCALE — / / —	SHEET 4 OF 4		DIST.	

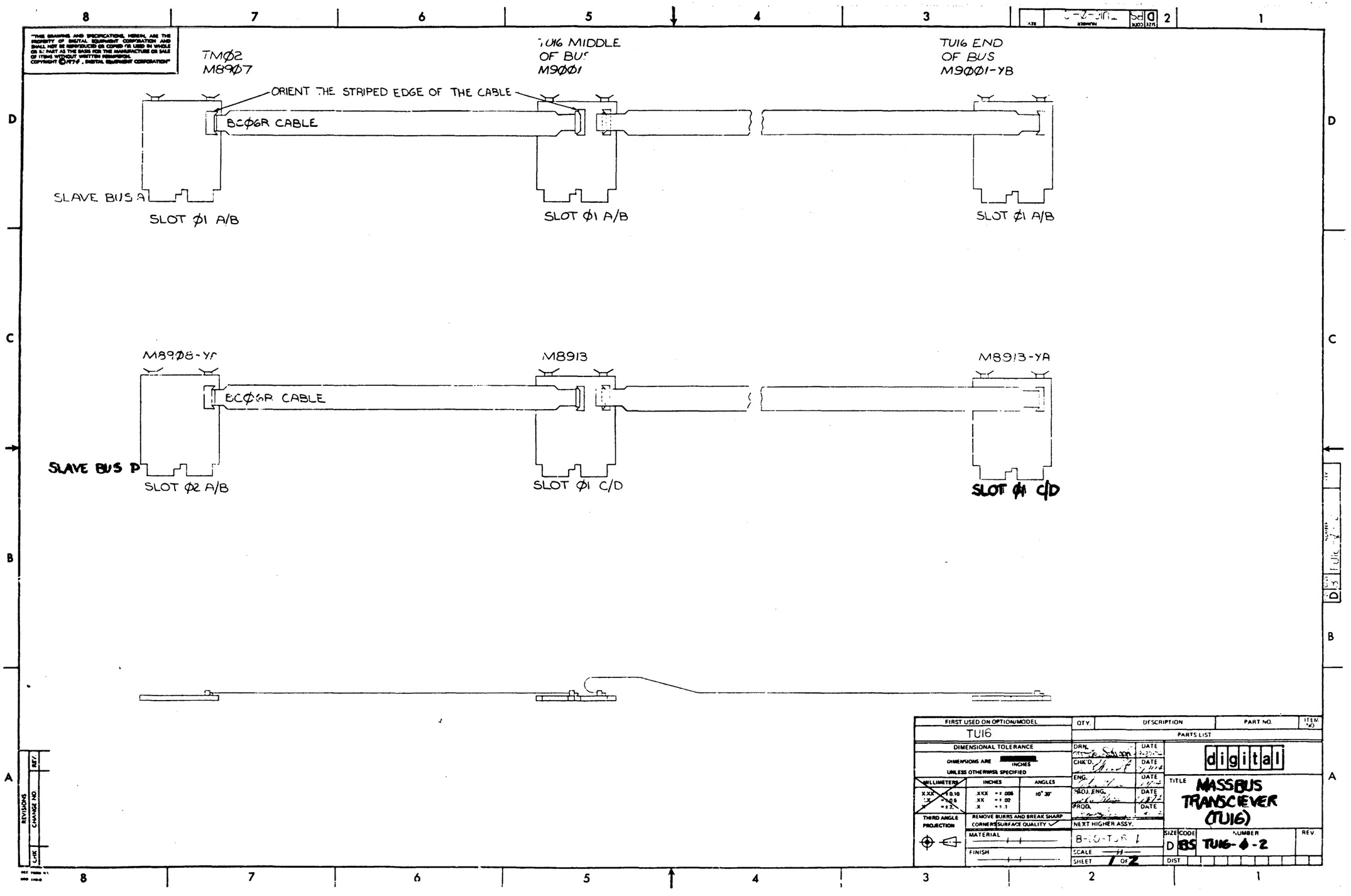

TMØ2
M89Ø7
TU16 MIDDLE
OF BUS
M9ØØ1
TU16 END
OF BUS
M9ØØ1-YB
ORIENT THE STRIPED EDGE OF THE CABLE
BCØ6R CABLE
SLAVE BUS A
SLOT Ø1 A/B
SLOT Ø1 A/B
SLOT Ø1 A/B
M89Ø8-YA
M8913
M8913-YA
BCØ6R CABLE
SLAVE BUS D
SLOT Ø2 A/B
SLOT Ø1 C/D
SLOT Ø1 C/D
FIRST USED ON OPTION/MODEL
TU16
QTY.
DESCRIPTION
PART NO.
ITEM NO.
PARTS LIST
DIMENSIONAL TOLERANCE
DIMENSIONS ARE INCHES
UNLESS OTHERWISE SPECIFIED
MILLIMETERS
INCHES
ANGLES
THIRD ANGLE PROJECTION
REMOVE BURRS AND BREAK SHARP CORNERS
SURFACE QUALITY
MATERIAL
FINISH
DRN.
CHK'D.
ENG.
PROJ. ENG.
PROD.
DATE
NEXT HIGHER ASSY.
SCALE
SHEET 1 OF 2
digital
TITLE
MASSBUS TRANSCIEVER (TU16)
SIZE D
CODE BS
NUMBER TU16-Ø-2
REV.
DIST.
REVISIONS
CHANGE NO.
REV.
CHK

"THIS DRAWING AND SPECIFICATIONS, HEREIN, ARE THE PROPERTY OF DIGITAL EQUIPMENT CORPORATION AND SHALL NOT BE REPRODUCED OR COPIED OR USED IN WHOLE OR IN PART AS THE BASIS FOR THE MANUFACTURE OR SALE OF ITEMS WITHOUT WRITTEN PERMISSION.
COPYRIGHT ©1974, DIGITAL EQUIPMENT CORPORATION"

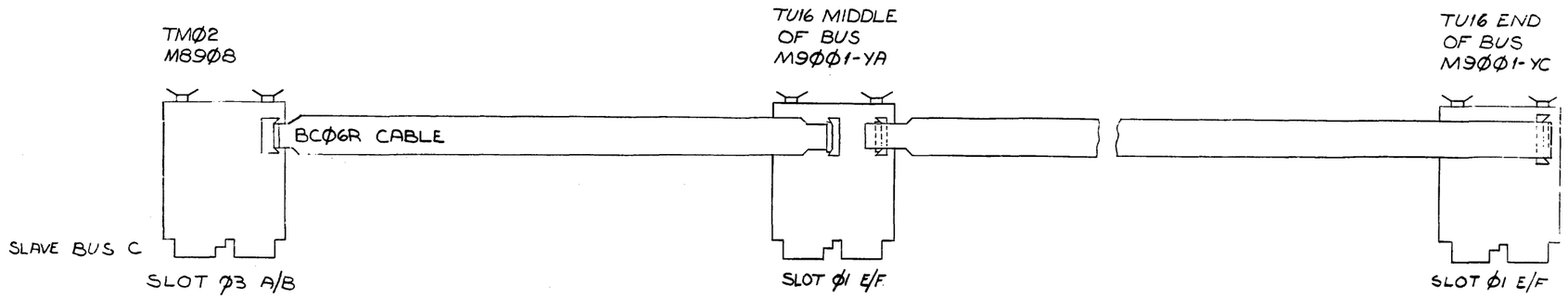

REVISIONS		
CHK	CHANGE NO	REV

TITLE	SIZE	CODE	NUMBER	REV.
MASSBUS TRANSCIEVER (TU16)	D	ES	TU16-Ø-2	
SCALE —ff— SHEET 2 OF 2	DIST.			

DEC FORM NO
ORD 131

"THIS DRAWING AND SPECIFICATIONS, HEREIN, ARE THE PROPERTY OF DIGITAL EQUIPMENT CORPORATION AND SHALL NOT BE REPRODUCED OR COPIED OR USED IN WHOLE OR IN PART AS THE BASIS FOR THE MANUFACTURE OR SALE OF ITEMS WITHOUT WRITTEN PERMISSION.
COPYRIGHT © 1977 , DIGITAL EQUIPMENT CORPORATION"

NOTES:

1. TMØ3-CA, CB, FA, FB WILL USE M8901-YB.
   TMØ3-CE, CF, FE, FF WILL USE M8901-YC.
   TMØ3-CN, FN WILL USE M8901-YD
2. M5303 MODULES LOCATED IN THE LAST TMØ3 ON THE MASSBUS SHOULD HAVE H37Ø TERMINATORS INSTALLED.
3. M8306 IS REPLACED BY M8915 (OR M8915-YA) IN TMØ3 CA, CB, CE, & CF
   M8306 IS REPLACED BY M8915-YA IN TMØ3-CN.
4. M8934 IS REPLACED BY M8934-YA IN TMØ3-CE, CF, FE & FF.

USAGE	9	8 *	7	6 △	5 △	4 △	3	2	1
	M8909-YA	M8906	M8933	M5303	M5303	M5303	M8906	M8908-YA	M8937
	M8905-YB	M8934 □	M8932	M8901 ◉	M8901 ◉	M8901 ◉			

◉ SEE NOTE *1
△ SEE NOTE *2
* SEE NOTE *3
□ SEE NOTE *4

ITEM NO.	DWG./PART NO.	DESCRIPTION
11	M8932	TAPE CONT PHASE ENC.
10	M8905-YB	MAINTENANCE REGIST
9	M5303	MASS BUS TERMINAL
8	M8909-YA	MASS BUS INTF.
7	M8908-YA	RECEIVER TERMINATOR
6	M8908	RECEIVER TERMINATOR
5	M8937	CONN TERMINATOR
4	M8906	16 BIT FIDDLER
3	M8934	TAPE CONTROL NRZI
2	M8933	TAPE CONT COMMON MODE
1	M8901	TU16 DATA SYNC

UNLESS OTHERWISE SPECIFIED DIMENSIONS ARE IN INCHES

ANGLES ±0° 30'	CLASS OF ACCURACY (CHECK ONE)	NOMINAL DIMENSION RANGE INCHES OVER 0 TO 0.2	OVER 0.2 TO 1.2	OVER 1.2 TO 4.0	OVER 4.0 TO 12.0	OVER 12.0 TO 40.0	OVER 40.0 TO 80.0
SURFACE QUALITY IN ✓ MICROINCHES	MEDIUM ☐	±.004	±.008	±.012	±.016	±.024	±.04
	PREFERRED ☐	±.012	±.016	±.025	±.04	±.063	±0.1

QUANTITY & VARIATION

THIRD ANGLE PROJECTION

REMOVE BURRS AND BREAK SHARP CORNERS

DO NOT SCALE DWG

MATERIAL

FINISH

DRN. T. Guillet 7 Feb 77
CHK'D J. Vagias 20 MAY 77
ENG. [illegible] 4-5-77
PROJ. ENG. [illegible] 4-5-77
PROD. [illegible] 4-5-77
NEXT HIGHER ASSY. E-UA-TMØ3-Ø-Ø
SCALE
SHEET 1 OF 1

FIRST USED ON TMØ3

digital

TITLE MODULE UTILIZATION

SIZE	CODE	NUMBER	REV.
D	MU	TMØ3-Ø-MU	B

DIST.

REVISIONS	CHK	CHANGE NO.	REV.
	JC	TMØ3-00001	A
	JV	TMØ3-00002	B

P. RAIKUNEN 01-MAR-78

SIZE A/11 2.1 Feb 78

MATERIAL FINISH

REC TYPE NO.
REC WDC

8 7 6 5 4 3 2 1

This drawing and specifications, herein, are the property of Digital Equipment Corporation and shall not be reproduced or copied or used in whole or in part as the basis for the manufacture or sale of items without written permission.

COPYRIGHT © 1976 DIGITAL EQUIPMENT CORP.

FIRST USED ON OPTION MODEL	QTY.	DESCRIPTION	PART NO.	ITEM NO.
TMØ3		PARTS LIST		

REVISIONS		
CHK	CHANGE NO.	REV.
EC	TMØ3-MLØØ3	A

DRN. T. Quillen	DATE 16 Nov 76	[redacted] EQUIPMENT CORPORATION MAYNARD, MASSACHUSETTS
CHK'D. T. Carlamy	DATE 20 MAY 77	
ENG.	DATE 4-5-77	TITLE
PROJ. ENG.	DATE 4-5-77	WIRE LIST (TMØ3)
PROD.	DATE 4-6-77	
NEXT HIGHER ASSEMBLY B-DD-TMØ3-Ø		
SCALE —		
SHEET 1 OF 1		

SIZE	CODE	NUMBER	REV.
K	WL	TMØ3-Ø-WL	A

DIST.

DEC FORM NO. DRB 109

4 3 2 1

RUN NAME	A/P	PIN NAME	ORDER PIN	BAY - ORDER	Q	DRAW OPT	RV	RG	Y	X	Z	REMARKS	NC LENGTH FLAG	EXCEPTIONS	RUN NUMBER
+15V		F01V1		1-01 *	P						1		1		1
+15V		F02V1		1-02 *	P						2		1		1
+15V		F03V1		1-03 *											1
+15V				1									2-0/8		1
+3V		A03P2		1-01 *							1		2-2/8		2
+3V		B01A1		1-02 *											2
+3V				1									2-2/8		2
+5V 01		A01A2		1-01 *	P						1		3-2/8		3
+5V 01		B01A2		1-02 *	P						2		3		3
+5V 01		C01A2		1-03 *	P						1		3-2/8		3
+5V 01		D01A2		1-04 *	P						2		3		3
+5V 01		E01A2		1-05 *	P						1		3-2/8		3
+5V 01		F01A2		1-06 *	P										3
+5V 01				1									15-6/8		3
+5V 02		A02A2		1-01 *	P						1		3-2/8		4
+5V 02		B02A2		1-02 *	P						2		3		4
+5V 02		C02A2		1-03 *	P						1		3-2/8		4
+5V 02		D02A2		1-04 *	P						2		3		4
+5V 02		E02A2		1-05 *	P						1		3-2/8		4
+5V 02		F02A2		1-06 *	P										4
+5V 02				1									15-6/8		4
+5V 03		A03A2		1-01 *	P						1		3-2/8		5
+5V 03		B03A2		1-02 *	P						2		3		5
+5V 03		C03A2		1-03 *	P						1		3-2/8		5
+5V 03		D03A2		1-04 *	P						2		3		5
+5V 03		E03A2		1-05 *	P						1		3-2/8		5
+5V 03		F03A2		1-06 *	P										5
+5V 03				1									15-6/8		5
+5V 04		A04A2		1-01 *	P						1		3-2/8		6
+5V 04		B04A2		1-02 *	P						2		3		6
+5V 04		C04A2		1-03 *	P						1		3-2/8		6
+5V 04		D04A2		1-04 *	P						2		3		6
+5V 04		E04A2		1-05 *	P						1		3-2/8		6
+5V 04		F04A2		1-06 *	P										6
+5V 04				1									15-6/8		6
+5V 05		A05A2		1-01 *	P						1		3-2/8		7
+5V 05		B05A2		1-02 *	P						2		3		7
+5V 05		C05A2		1-03 *	P						1		3-2/8		7
+5V 05		D05A2		1-04 *	P						2		3		7
+5V 05		E05A2		1-05 *	P						1		3-2/8		7
+5V 05		F05A2		1-06 *	P										7
+5V 05				1									15-6/8		7
+5V 06		A06A2		1-01 *	P						1		3-2/8		8
+5V 06		B06A2		1-02 *	P						2		3		8
+5V 06		C06A2		1-03 *	P						1		3-2/8		8
+5V 06		D06A2		1-04 *	P						2		3		8
+5V 06		E06A2		1-05 *	P						1		3-2/8		8
+5V 06		F06A2		1-06 *	P										8
+5V 06				1									15-6/8		8

RUN NAME	A/P	PIN NAME	ORDER PIN	BAY - ORDER	Q	DRAW OPT	RV	RG	Y	X	Z	REMARKS	NC LENGTH FLAG	EXCEPTIONS	RUN NUMBER
+5V 07		A07A2		1-01 *	P						1		3-2/8		9
+5V 07		B07A2		1-02 *	P						2		3		9
+5V 07		C07A2		1-03 *	P						1		3-2/8		9
+5V 07		D07A2		1-04 *	P						2		3		9
+5V 07		E07A2		1-05 *	P						1		3-2/8		9
+5V 07		F07A2		1-06 *	P										9
+5V 07				1									15-6/8		9
+5V 08		A08A2		1-01 *	P						1		3-2/8		10
+5V 08		B08A2		1-02 *	P						2				10
+5V 08		C08A2		1-03 *	P						1		3-2/8		10
+5V 08		D08A2		1-04 *	P						2				10
+5V 08		E08A2		1-05 *	P						1		3-2/8		10
+5V 08		F08A2		1-06 *	P										10
+5V 08				1									15-6/8		10
+5V 09		A09A2		1-01 *	P						1		3-2/8		11
+5V 09		B09A2		1-02 *	P						2		3		11
+5V 09		C09A2		1-03 *	P						1		3-2/8		11
+5V 09		D09A2		1-04 *	P						2		3		11
+5V 09		E09A2		1-05 *	P						1		3-2/8		11
+5V 09		F09A2		1-06 *											11
+5V 09				1									15-6/8		11
-15V		A04B2		1-01 *	P						1		0-5/8		12
-15V		A04E2		1-02 *	P						2		1-2/8		12
-15V		A05B2		1-03 *	P						2		1		12
-15V		A06B2		1-04 *							1		4-1/8		12
-15V		B04B2		1-05 *	P						2		1		12
-15V		B05B2		1-06 *	P						2		1		12
-15V		B06B2		1-07 *											12
-15V				1									9-0/8		12
125 IPS(1) L		A01D2		1-01 *							1		11-7/8		13
125 IPS(1) L		E01L1		1-02 *											13
125 IPS(1) L				1									11-7/8		13
125 IPS(2) L		E01L2		1-01 *							1		0-4/8		14
125 IPS(2) L		E02L1		1-02 *											14
125 IPS(2) L				1									0-4/8		14
125 IPS(3) L		E02L2		1-01 *							1		0-4/8		15
125 IPS(3) L		E03L1		1-02 *											15
125 IPS(3) L				1									0-4/8		15
15 MODE-		C08N2												1-PIN RUN	16
1600 BPI L		B01R1		1-01 *							1		2-2/8		17
1600 BPI L		B03D2		1-02 *											17
1600 BPI L				1									2-2/8		17
200 BPICLK(1) H		E04H2		1-01 *	P						2		2		18
200 BPICLK(1) H		E07H2		1-02 *							1		12-7/8		18
200 BPICLK(1) H		A01U1		1-03 *											18
200 BPICLK(1) H				1									14-7/8		18

RUN NAME	A/P	PIN NAME	ORDER PIN	BAY - ORDER	Q	DRAW OPT	RV	RG	Y	X	Z	REMARKS	NC LENGTH FLAG	EXCEPTIONS	RUN NUMBER
24-32 H		D04A1												1-PIN RUN	19
3 ENV H		D04H1												1-PIN RUN	20
45 IPS(1) L		A01F2		1-01 *							1		11-2/8		21
45 IPS(1) L		E01J2		1-02 *											21
45 IPS(1) L				1									11-2/8		21
45 IPS(2) L		E01F1		1-01 *							1		1-3/8		22
45 IPS(2) L		E02J2		1-02 *											22
45 IPS(2) L				1									1-3/8		22
45 IPS(3) L		E02F1		1-01 *							2		1-3/8		23
45 IPS(3) L		E03J2		1-02 *							1		4-7/8		23
45 IPS(3) L		F05R2		1-03 *											23
45 IPS(3) L				1									6-2/8		23
7 CH H		A03D2		1-01 *							1		7-3/8		24
7 CH H		C03U2		1-02 *	P						2		1		24
7 CH H		C02U2		1-03 *	P						1		3		24
7 CH H		C07U2		1-04 *							1		3-4/8		24
7 CH H		C01U2		1-05 *											24
7 CH H				1									14-7/8		24
7 CH L		C05J2		1-01 *	P						2		1-4/8		25
7 CH L		C07J2		1-02 *	P						2		1		25
7 CH L		C08J2		1-03 *											25
7 CH L				1									2-4/8		25
7 CH TM0		B07B2		1-01 *							1		3-6/8		26
7 CH TM0		B01B1		1-02 *											26
7 CH TM0				1									3-6/8		26
7 CH TM1		A07R1		1-01 *							1		3-4/8		27
7 CH TM1		A01R1		1-02 *											27
7 CH TM1				1									3-4/8		27
7 SEC D*Y TOL TO H		F07U2		1-01 *	P						1		1-4/8		28
7 SEC D*Y TOL TO H		F09U2		1-02 *											28
7 SEC D*Y TOL TO H				1									1-4/8		28
75 IPS(1) L		A01K2		1-01 *							1		11-5/8		29
75 IPS(1) L		E01K1		1-02 *											29
75 IPS(1) L				1									11-5/8		29
75 IPS(2) L		E01K2		1-01 *							1		0-4/8		30
75 IPS(2) L		E02K1		1-02 *											30
75 IPS(2) L				1									0-4/8		30
75 IPS(3) L		E02K2		1-01 *							1		0-4/8		31
75 IPS(3) L		E03K1		1-02 *											31
75 IPS(3) L				1									0-4/8		31

RUN NAME	A/P	PIN NAME	ORDER PIN	BAY - ORDER	Q	DRAW OPT	RV	RG	Y	X	Z	REMARKS	NC LENGTH FLAG	EXCEPTIONS	RUN NUMBER
A EMD(1) H		C09J1		1-01 *							2		1-5/8		32
A EMD(1) H		C08S2		1-02 *							1		5-_/8		32
A EMD(1) H		E07V2		1-03 *	P						2		1-4/8		32
A EMD(1) H		E09V2		1-04 *											32
A EMD(1) H				1									9-4/8		32
AC LO L		A09H1												1-PIN RUN	33
ACCL H		C04A1		1-01 *	P						1		2		34
ACCL H		C07A1		1-02 *											34
ACCL H				1									2-0/8		34
ACCL(SB) L		A01H2		1-01 *							1		4-1/8		35
ACCL(SB) L		A07P2		1-02 *											35
ACCL(SB) L				1									4-1/8		35
ANY DD TRK H		E04R1												1-PIN RUN	36
ANY ENV H		C04K1												1-PIN RUN	37
ANY TPANS L		E0182		1-01 *							2		1		38
ANY TRANS L		E0282		1-02 *	P						1		1		38
ANY TRANS L		E0382		1-03 *	P						2		1		38
ANY TRANS L		E0482		1-04 *											38
ANY TRANS L				1									3-0/8		38
ATA H		C07C1		1-01 *	P						1		1-4/8		39
ATA H		C09C1		1-02 *											39
ATA H				1									1-4/8		39
ATTN L		B04L2		1-01 *							1		6-1/8		40
ATTN L		C09V1		1-02 *											40
ATTN L				1									6-1/8		40
BF ENBL H		A08C1		1-01 *	P						1		1		41
BF ENBL H		A09C1		1-02 *											41
BF ENBL H				1									1-0/8		41
BF FMTE H		C08A1		1-01 *	P						1		1		42
BF FMTE H		C09A1		1-02 *											42
BF FMTE H				1									1-0/8		42
BFFR A 0		D01H1		1-01 *							1		3-1/8		43
BFFR A 0		D0482		1-02 *											43
BFFR A 0				1									3-1/8		43
BFFR A 1		D03H1		1-01 *	P						1		1-3/8		44
BFFR A 1		D04M2		1-02 *											44
BFFR A 1				1									1-3/8		44
BFFR A 2		D01L2		1-01 *							1		2-1/8		45
BFFR A 2		D04R1		1-02 *											45
BFFR A 2				1									2-1/8		45

RUN NAME	A/P	PIN NAME	ORDER PIN	BAY - ORDER	Q	DRAW OPT	RV	RG	Y	X	Z	REMARKS	NC LENGTH FLAG	EXCEPTIONS	RUN NUMBER
BFFR A 3		D03M1		1-01 *	P						1		1-3/8		46
BFFR A 3		D04P2		1-02 *											46
BFFR A 3				1									1-3/8		46
BFFR A 4		D01M1		1-01 *							1		2-1/8		47
BFFR A 4		D04P1		1-02 *											47
BFFR A 4				1									2-1/8		47
BFFR A 5		D02H1		1-01 *							1		1-7/8		48
BFFR A 5		D04M1		1-02 *											48
BFFR A 5				1									1-7/8		48
BFFR A 6		D02M1		1-01 *	P						1		1-5/8		49
BFFR A 6		D04N1		1-02 *											49
BFFR A 6				1									1-5/8		49
BFFR A 7		D03L2		1-01 *	P						1		0-4/8		50
BFFR A 7		D04L1		1-02 *											50
BFFR A 7				1									0-4/8		50
BFFR A P		D02L2		1-01 *	P						1		1-3/8		51
BFFR A P		D04K2		1-02 *											51
BFFR A P				1									1-3/8		51
BIT RDY 1 L		D01R2												1-PIN RUN	52
BIT RDY 2 L		C01R2												1-PIN RUN	53
BIT RDY 3 L		E01T2												1-PIN RUN	54
BIT RDY 4 L		D02R2												1-PIN RUN	55
BIT RDY 5 L		C02R2												1-PIN RUN	56
BIT RDY 6 L		E02T2												1-PIN RUN	57
BIT RDY 7 L		D03R2												1-PIN RUN	58
BIT RDY 8 L		C03R2												1-PIN RUN	59
BIT RDY 9 L		E03T2												1-PIN RUN	60
BIT RDY H		C01M2		1-01 *							1		1		61
BIT RDY H		C02M2		1-02 *	P						2		1		61
BIT RDY H		C03M2		1-03 *	P						1		1-5/8		61
BIT RDY H		C04V1		1-04 *											61
BIT RDY H				1									3-5/8		61
BIT STRB 1 H		C03V2		1-01 *							1		0-3/8		62
BIT STRB 1 H		F06F2		1-02 *											62
BIT STRB 1 H				1									0-3/8		62
BIT STRB 2 H		E01M1		1-01 *							1		4-5/8		63
BIT STRB 2 H		F06E2		1-02 *											63
BIT STRB 2 H				1									4-5/8		63

RUN NAME	A/P	PIN NAME	ORDER PIN	BAY = ORDER	Q	DRAW OPT	RV	RG	Y	X	Z	REMARKS	NC LENGTH FLAG	EXCEPTIONS	RUN NUMBER
BOT H		B02M2		1=01 *							1		4=3/8		64
BOT H		B07H2		1=02 *	P						2		1=4/8		64
BOT H		B09H2		1=03 *							1		6=5/8		64
BOT H		A01M2		1=04 *											64
BOT H				1									11=4/8		64
BOT L		B07H1		1=01 *	P						1		1=4/8		65
BOT L		B09H1		1=02 *											65
BOT L				1									1=4/8		65
BPAR L		B08B1		1=01 *							1		2=5/8		66
BPAR L		D05U1		1=02 *											66
BPAR L				1									2=5/8		66
BRIP(1) L		C09U2		1=01 *							1		8=3/8		67
BRIP(1) L		F06C1		1=02 *											67
BRIP(1) L				1									8=3/8		67
C00		A09E2		1=01 *	P						2		4=3/8		68
C00		A04S1		1=02 *	P						2		0=4/8		68
C00		A04U1		1=03 *							2		6=5/8		68
C00		C06R2		1=04 *											68
C00				1									11=4/8		68
C01		A09D2		1=01 *	P						2		4=1/8		69
C01		A04N1		1=02 *	P						2		1		69
C01		A04T2		1=03 *							1		5=7/8		69
C01		C06P1		1=04 *											69
C01				1									11=0/8		69
C02		B04A1		1=01 *	P						1		0=1/8		70
C02		B04B1		1=02 *	P						2		4=5/8		70
C02		B09S2		1=03 *							1		4=1/8		70
C02		C06R1		1=04 *											70
C02				1									8=7/8		70
C03		A04V2		1=01 *	P						1		0=4/8		71
C03		A04V1		1=02 *							2		4		71
C03		B09U1		1=03 *							1		3=7/8		71
C03		C06S1		1=04 *											71
C03				1									8=3/8		71
C04		B04E1		1=01 *	P						1		0=5/8		72
C04		B04J2		1=02 *	P						2		3=3/8		72
C04		B09R1		1=03 *							1		4=1/8		72
C04		C06P2		1=04 *											72
C04				1									8=1/8		72
C05		B09B2		1=01 *	P						2		3=3/8		73
C05		B04C1		1=02 *	P						2		0=1/8		73
C05		B04D1		1=03 *							2		4=7/8		73
C05		C06N1		1=04 *											73
C05				1									8=3/8		73

RUN NAME	A/P	PIN NAME	ORDER PIN	BAY = ORDER	Q	DRAW OPT	RV	RG	Y	X	Z	REMARKS	NC LENGTH FLAG	EXCEPTIONS	RUN NUMBER
C06		A05S1		1=01 *	P						1		0=4/8		74
C06		A05U1		1=02 *							2		3=7/8		74
C06		B09D2		1=03 *							1		5=5/8		74
C06		C06M1		1=04 *											74
C06				1									10=0/8		74
C07		A05N1		1=01 *	P						1		1		75
C07		A05T2		1=02 *							1		3=2/8		75
C07		B09F2		1=03 *							2		5=1/8		75
C07		C06M2		1=04 *											75
C07				1									9=3/8		75
C08		A09N2		1=01 *							2		3=7/8		76
C08		B05B1		1=02 *	P						1		0=1/8		76
C08		B05A1		1=03 *							2		4=3/8		76
C08		C06K1		1=04 *											76
C08				1									8=3/8		76
C09		A09S1		1=01 *	P						2		2=3/8		77
C09		A05V2		1=02 *	P						2		0=4/8		77
C09		A05V1		1=03 *							2		5=1/8		77
C09		C06L1		1=04 *											77
C09				1									8=0/8		77
C10		B05E1		1=01 *	P						1		0=5/8		78
C10		B05J2		1=02 *							2		3=3/8		78
C10		C06J2		1=03 *							1		2=5/8		78
C10		B09T2		1=04 *											78
C10				1									6=5/8		78
C11		B09A1		1=01 *	P						2		2=5/8		79
C11		B05C1		1=02 *	P						2		0=1/8		79
C11		B05D1		1=03 *							2		4=3/8		79
C11		C06L2		1=04 *											79
C11				1									7=1/8		79
C12		A09K2		1=01 *							1		2=3/8		80
C12		A06N1		1=02 *	P						2		1		80
C12		A06T2		1=03 *							1		4=5/8		80
C12		C06F1		1=04 *											80
C12				1									8=0/8		80
C13		A09H2		1=01 *							2		3=1/8		81
C13		B06A1		1=02 *	P						2		0=1/8		81
C13		B06B1		1=03 *							1		3=3/8		81
C13		C06E1		1=04 *											81
C13				1									6=5/8		81
C14		A06V2		1=01 *	P						1		0=4/8		82
C14		A06V1		1=02 *							2		4=3/8		82
C14		C06H1		1=03 *							1		3=3/8		82
C14		B09V2		1=04 *											82
C14				1									8=2/8		82

RUN NAME	A/P	PIN NAME	ORDER PIN	BAY - ORDER	Q	DRAW OPT	RV	RG	Y	X	Z	REMARKS	NC LENGTH FLAG	EXCEPTIONS	RUN NUMBER
C15		B06E1		1-01 *	P						1		0-5/8		83
C15		B06J2		1-02 *	P						2		2-2/8		83
C15		B09U2		1-03 *							1		2-5/8		83
C15		C06J1		1-04 *											83
C15				1									5-4/8		83
CER(1) H		D01D1		1-01 *							1		7-7/8		84
CER(1) H		F04L1		1-02 *											84
CER(1) H				1									7-7/8		84
CHAR CNTO H		F0181		1-01 *							1		1		85
CHAR CNTO H		F0281		1-02 *	P						2		1		85
CHAR CNTO H		F0381		1-03 *							1		10-3/8		85
CHAR CNTO H		C04C1		1-04 *											85
CHAR CNTO H				1									12-3/8		85
CHAR SHIFT H		C01M1		1-01 *							2		1		86
CHAR SHIFT H		C02M1		1-02 *	P						1		1		86
CHAR SHIFT H		C03M1		1-03 *	P						2		1		86
CHAR SHIFT H		C04M1		1-04 *											86
CHAR SHIFT H				1									3-0/8		86
CHK CHAR L		C05N2		1-01 *							1		5-1/8		87
CHK CHAR L		D08U2		1-02 *											87
CHK CHAR L				1									5-1/8		87
CLK A H		C08F1												1-PIN RUN	88
CLK B H		C08H1												1-PIN RUN	89
CLK C H		C08E1												1-PIN RUN	90
CLK D H		C08D1												1-PIN RUN	91
CLK L CK CHAR REG L		C05F2		1-01 *	P						1		1		92
CLK L CK CHAR REG L		C06F2		1-02 *											92
CLK L CK CHAR REG L				1									1-0/8		92
CLOCK H		A07M1		1-01 *							1		4		93
CLOCK H		B02E1		1-02 *											93
CLOCK H				1									4-0/8		93
CLR OPI L		F07U1		1-01 *							1		6-5/8		94
CLR OPI L		D09U1		1-02 *											94
CLR OPI L				1									6-5/8		94
CMUX 00		E06U1		1-01 *	P						1		1		95
CMUX 00		E07U1		1-02 *	P						2		1-4/8		95
CMUX 00		E09U1		1-03 *											95
CMUX 00				1									2-4/8		95
CMUX 01		E0681		1-01 *	P						1		1		96
CMUX 01		E0781		1-02 *	P						2		1-4/8		96
CMUX 01		E0981		1-03 *											96
CMUX 01				1									2-4/8		96

RUN NAME	A/P	PIN NAME	ORDER PIN	BAY - ORDER	Q	DRAW OPT	RV	RG	Y	X	Z	REMARKS	NC LENGTH FLAG	EXCEPTIONS	RUN NUMBER
CMUX 02		E06R1		1-01 *	P						1		1		97
CMUX 02		E07R1		1-02 *	P						2		1-3/8		97
CMUX 02		E09P1		1-03 *											97
CMUX 02				1									2-3/8		97
CMUX 03		E06P1		1-01 *	P						1		1		98
CMUX 03		E07P1		1-02 *	P						2		1-5/8		98
CMUX 03		E09R1		1-03 *											98
CMUX 03				1									2-5/8		98
CMUX 04		E06N1		1-01 *							2		1		99
CMUX 04		E07N1		1-02 *	P						1		1-4/8		99
CMUX 04		E09N1		1-03 *											99
CMUX 04				1									2-4/8		99
CMUX 05		E06M1		1-01 *	P						1		1		100
CMUX 05		E07M1		1-02 *	P						2		1-4/8		100
CMUX 05		E09M1		1-03 *											100
CMUX 05				1									2-4/8		100
CMUX 06		E06L1		1-01 *	P						1		1		101
CMUX 06		E07L1		1-02 *	P						2		1-4/8		101
CMUX 06		E09L1		1-03 *											101
CMUX 06				1									2-4/8		101
CMUX 07		E06K1		1-01 *	P						1		1		102
CMUX 07		E07K1		1-02 *	P						2		1-4/8		102
CMUX 07		E09K1		1-03 *											102
CMUX 07				1									2-4/8		102
CMUX 08		E06J1		1-01 *	P						1		1		103
CMUX 08		E07J1		1-02 *	P						2		1-4/8		103
CMUX 08		E09J1		1-03 *											103
CMUX 08				1									2-4/8		103
CMUX 09		E06H1		1-01 *	P						1		1		104
CMUX 09		E07H1		1-02 *	P						2		1-4/8		104
CMUX 09		E09H1		1-03 *											104
CMUX 09				1									2-4/8		104
CMUX 10		E06F1		1-01 *	P						1		1		105
CMUX 10		E07F1		1-02 *	P						2		1-4/8		105
CMUX 10		E09F1		1-03 *											105
CMUX 10				1									2-4/8		105
CMUX 11		E06E1		1-01 *	P						1		1		106
CMUX 11		E07E1		1-02 *	P						2		1-4/8		106
CMUX 11		E09E1		1-03 *											106
CMUX 11				1									2-4/8		106
CMUX 12		E06D1		1-01 *	P						1		1		107
CMUX 12		E07D1		1-02 *	P						2		1-4/8		107
CMUX 12		E09D1		1-03 *											107
CMUX 12				1									2-4/8		107

RUN NAME	A/P	PIN NAME	ORDER PIN	BAY - ORDER	Q	DRAW OPT	RV	RG	Y	X	Z	REMARKS	NC LENGTH FLAG	EXCEPTIONS	RUN NUMBER
CMUX 13		E06C1		1-01 *							2		1		108
CMUX 13		E07C1		1-02 *	P						1		1-4/8		108
CMUX 13		E09C1		1-03 *											108
CMUX 13				1									2-4/8		108
CMUX 14		E06B1		1-01 *	P						1		1		109
CMUX 14		E07B1		1-02 *	P						2		1-4/8		109
CMUX 14		E09B1		1-03 *											109
CMUX 14				1									2-4/8		109
CMUX 15		E06A1		1-01 *	P						1		1		110
CMUX 15		E07A1		1-02 *	P						2		1-4/8		110
CMUX 15		E09A1		1-03 *											110
CMUX 15				1									2-4/8		110
COMPER H		C07B1		1-01 *	P						1		1-4/8		111
COMPER H		C09B1		1-02 *											111
COMPER H				1									1-4/8		111
CORE DUMP		C08B1												1=PIN RUN	112
CORR/CRCE,L		E04V2		1-01 *	P						1		1		113
CORR/CRCE,L		F05V2		1-02 *	P						2		2-7/8		113
CORR/CRCE,L		F09J1		1-03 *											113
CORR/CRCE,L				1									3-7/8		113
CPA REC H		B06C1		1-01 *							1		13-1/8		114
CPA REC H		F09K1		1-02 *											114
CPA REC H				1									13-1/8		114
CPA TM L		B06D1		1-01 *	P						1		2-1/8		115
CPA TM L		B09F1		1-02 *											115
CPA TM L				1									2-1/8		115
CRC 0(1) H		C05J1		1-01 *	P						1		1-4/8		116
CRC 0(1) H		C07J1		1-02 *											116
CRC 0(1) H				1									1-4/8		116
CRC 1(1) H		C05R1		1-01 *	P						1		1-4/8		117
CRC 1(1) H		C07R1		1-02 *											117
CRC 1(1) H				1									1-4/8		117
CRC 2(1) H		C05E1		1-01 *	P						1		1-4/8		118
CRC 2(1) H		C07E1		1-02 *											118
CRC 2(1) H				1									1-4/8		118
CRC 3(1) H		C05S1		1-01 *	P						1		1-4/8		119
CRC 3(1) H		C07S1		1-02 *											119
CRC 3(1) H				1									1-4/8		119
CRC 4(1) H		C05K1		1-01 *	P						1		1-4/8		120
CRC 4(1) H		C07K1		1-02 *											120
CRC 4(1) H				1									1-4/8		120

RUN NAME	A/P	PIN NAME	ORDER PIN	BAY - ORDER	Q	DRAW OPT	RV	RG	Y	X	Z	REMARKS	NC LENGTH FLAG	EXCEPTIONS	RUN NUMBER
CRC 5(1) H		C05M1		1-01 *	P						1		1-4/8		121
CRC 5(1) H		C07M1		1-02 *											121
CRC 5(1) H				1									1-4/8		121
CRC 6(1) H		C05N1		1-01 *	P						1		1-4/8		122
CRC 6(1) H		C07N1		1-02 *											122
CRC 6(1) H				1									1-4/8		122
CRC 7(1) H		C05P1		1-01 *	P						1		1-4/8		123
CRC 7(1) H		C07P1		1-02 *											123
CRC 7(1) H				1									1-4/8		123
CRC P(1) H		C05L1		1-01 *	P						1		1-4/8		124
CRC P(1) H		C07L1		1-02 *											124
CRC P(1) H				1									1-4/8		124
CRC STRB H		D05P2		1-01 *							1		9-1/8		125
CRC STRB H		A07P1		1-02 *											125
CRC STRB H				1									9-1/8		125
CTOD H		A09N1		1-01 *							1		6-1/8		126
CTOD H		B04V2		1-02 *											126
CTOD H				1									6-1/8		126
CYCLE 1(1) H		F05R2												1=PIN RUN	127
CYCLE 2(1) H		E05U1												1=PIN RUN	128
CYCLE 3(1) H		E05R1												1=PIN RUN	129
D BFFR I 0 L		C01F1		1-01 *							1		7-7/8		130
D BFFR I 0 L		E04P1		1-02 *											130
D BFFR I 0 L				1									7-7/8		130
D BFFR I 1 L		C03F1		1-01 *							1		7-5/8		131
D BFFR I 1 L		E04U2		1-02 *											131
D BFFR I 1 L				1									7-5/8		131
D BFFR I 2 L		E01D2		1-01 *							1		2-2/8		132
D BFFR I 2 L		E04S1		1-02 *											132
D BFFR I 2 L				1									2-2/8		132
D BFFR I 3 L		E04T2		1-01 *							1		2-3/8		133
D BFFR I 3 L		F03E2		1-02 *											133
D BFFR I 3 L				1									2-3/8		133
D BFFR I 4 L		E04F1		1-01 *							1		4-3/8		134
D BFFR I 4 L		F01E2		1-02 *											134
D BFFR I 4 L				1									4-3/8		134
D BFFR I 5 L		C02F1		1-01 *							1		6-3/8		135
D BFFR I 5 L		E04D1		1-02 *											135
D BFFR I 5 L				1									6-3/8		135

RUN NAME	A/P	PIN NAME	ORDER PIN	BAY - ORDER	Q	DRAW OPT	RV	RG	Y	X	Z	REMARKS	NC FLAG	LENGTH EXCEPTIONS	RUN NUMBER
D BFFR I 6 L		E04C1		1-01 *							1			4-1/8	136
D BFFR I 6 L		F02E2		1-02 *											136
D BFFR I 6 L				1										4-1/8	136
D BFFR I 7 L		E03D2		1-01 *	P						1			0-4/8	137
D BFFR I 7 L		E04B1		1-02 *											137
D BFFR I 7 L				1										0-4/8	137
D BFFR I P L		E02D2		1-01 *	P						1			1-1/8	138
D BFFR I P L		E04E1		1-02 *											138
D BFFR I P L				1										1-1/8	138
D00 REC H		A04D1		1-01 *							1			3-4/8	139
D00 REC H		A08R1		1-02 *											139
D00 REC H				1										3-4/8	139
D00 TM(0) L		A04E1		1-01 *	P						1			2-7/8	140
D00 TM(0) L		A08A1		1-02 *											140
D00 TM(0) L				1										2-7/8	140
D01 REC H		A04A1		1-01 *							1			4-1/8	141
D01 REC H		A08R2		1-02 *											141
D01 REC H				1										4-1/8	141
D01 TM(0) L		A04C1		1-01 *	P						1			2-5/8	142
D01 TM(0) L		A08B1		1-02 *											142
D01 TM(0) L				1										2-5/8	142
D02 REC H		A04K1		1-01 *	P						1			3-1/8	143
D02 REC H		A08S1		1-02 *											143
D02 REC H				1										3-1/8	143
D02 TM(0) L		A04M2		1-01 *	P						1			3-5/8	144
D02 TM(0) L		A08B2		1-02 *											144
D02 TM(0) L				1										3-5/8	144
D03 REC H		A04F1		1-01 *							1			3-5/8	145
D03 REC H		A08S2		1-02 *											145
D03 REC H				1										3-5/8	145
D03 TM L		A04L2		1-01 *							1			3-1/8	146
D03 TM L		A08D2		1-02 *											146
D03 TM L				1										3-1/8	146
D04 REC H		A04M1		1-01 *							1			3-3/8	147
D04 REC H		A08T2		1-02 *											147
D04 REC H				1										3-3/8	147
D04 TM(0) L		A04P2		1-01 *							1			3-3/8	148
D04 TM(0) L		A08E2		1-02 *											148
D04 TM(0) L				1										3-3/8	148
D05 REC H		A04L1		1-01 *							1			3-1/8	149
D05 REC H		A08U1		1-02 *											149
D05 REC H				1										3-1/8	149

RUN NAME	A/P	PIN NAME	ORDER PIN	BAY - ORDER	Q	DRAW OPT	RV	RG	Y	X	Z	REMARKS	NC FLAG	LENGTH EXCEPTIONS	RUN NUMBER
D05 TM(0) L		A04N2		1-01 *							1			3-1/8	150
D05 TM(0) L		A08F2		1-02 *											150
D05 TM(0) L				1										3-1/8	150
D06 REC H		A05D1		1-01 *							1			2-6/8	151
D06 REC H		A08U2		1-02 *											151
D06 REC H				1										2-6/8	151
D06 TM(0) L		A05E1		1-01 *	P						1			2-1/8	152
D06 TM(0) L		A08H1		1-02 *											152
D06 TM(0) L				1										2-1/8	152
D07 REC H		A05A1		1-01 *							1			3-4/8	153
D07 REC H		A08V1		1-02 *											153
D07 REC H				1										3-4/8	153
D07 TM(0) L		A05C1		1-01 *							1			2-5/8	154
D07 TM(0) L		A08H2		1-02 *											154
D07 TM(0) L				1										2-5/8	154
D08 REC H		A05K1		1-01 *							1			3-3/8	155
D08 REC H		A08V2		1-02 *											155
D08 REC H				1										3-3/8	155
D08 TM(0) L		A05M2		1-01 *							1			2-1/8	156
D08 TM(0) L		A08J1		1-02 *											156
D08 TM(0) L				1										2-1/8	156
D09 REC H		A05F1		1-01 *							1			3-6/8	157
D09 REC H		B08A1		1-02 *											157
D09 REC H				1										3-6/8	157
D09 TM(0) L		A05L2		1-01 *	P						1			1-5/8	158
D09 TM(0) L		A08K1		1-02 *											158
D09 TM(0) L				1										1-5/8	158
D10 REC H		A05M1		1-01 *							1			2-6/8	159
D10 REC H		B08B1		1-02 *											159
D10 REC H				1										2-6/8	159
D10 TM(0) L		A05P2		1-01 *							1			2-3/8	160
D10 TM(0) L		A08K2		1-02 *											160
D10 TM(0) L				1										2-3/8	160
D11 REC H		A05L1		1-01 *							1			2-7/8	161
D11 REC H		B08B2		1-02 *											161
D11 REC H				1										2-7/8	161
D11 TM(0) L		A05N2		1-01 *							1			1-7/8	162
D11 TM(0) L		A08L1		1-02 *											162
D11 TM(0) L				1										1-7/8	162
D12 REC H		A06D1		1-01 *							1			3-7/8	163
D12 REC H		B08C1		1-02 *											163
D12 REC H				1										3-7/8	163

RUN NAME	A/P	PIN NAME	ORDER PIN	BAY - ORDER	Q	DRAW OPT	RV	RG	Y	X	Z	REMARKS	NC LENGTH FLAG	EXCEPTIONS	RUN NUMBER
D12 TM(0) L		A06E1		1-01 *							1		2-3/8		164
D12 TM(0) L		A08L2		1-02 *											164
D12 TM(0) L				1									2-3/8		164
D13 REC H		A06A1		1-01 *							1		4-5/8		165
D13 REC H		B08D1		1-02 *											165
D13 REC H				1									4-5/8		165
D13 TM(0) L		A06C1		1-01 *							1		1-7/8		166
D13 TM(0) L		A08M1		1-02 *											166
D13 TM(0) L				1									1-7/8		166
D14 REC H		A06K1		1-01 *							1		3-6/8		167
D14 REC H		B08D2		1-02 *											167
D14 REC H				1									3-6/8		167
D14 TM(0) L		A06M2		1-01 *	P						1		1-4/8		168
D14 TM(0) L		A08M2		1-02 *											168
D14 TM(0) L				1									1-4/8		168
D15 REC H		A06F1		1-01 *							1		3-7/8		169
D15 REC H		B08E1		1-02 *											169
D15 REC H				1									3-7/8		169
D15 TM(0) L		A06L2		1-01 *							1		1-3/8		170
D15 TM(0) L		A08N1		1-02 *											170
D15 TM(0) L				1									1-3/8		170
D16 REC H		A06M1		1-01 *							1		3-4/8		171
D16 REC H		B08E2		1-02 *											171
D16 REC H				1									3-4/8		171
D16 TM(0) L		A06P2		1-01 *	P						1		1-5/8		172
D16 TM(0) L		A08N2		1-02 *											172
D16 TM(0) L				1									1-5/8		172
D17 REC H		A06L1		1-01 *							1		3-5/8		173
D17 REC H		B08F1		1-02 *											173
D17 REC H				1									3-5/8		173
D17 TM(0) L		A06N2		1-01 *	P						1		1-3/8		174
D17 TM(0) L		A08P2		1-02 *											174
D17 TM(0) L				1									1-3/8		174
DATA H		C04B2		1-01 *	P						1		2		175
DATA H		C07B2		1-02 *											175
DATA H				1									2-0/8		175
DATA HALF(1) H		E01P2		1-01 *							1		1		176
DATA HALF(1) H		E02P2		1-02 *	P						1		1		176
DATA HALF(1) H		E03P2		1-03 *	P						2		1		176
DATA HALF(1) H		E04P2		1-04 *	P						1		2		176
DATA HALF(1) H		E07P2		1-05 *											176
DATA HALF(1) H				1									5-0/8		176

RUN NAME	A/P	PIN NAME	ORDER PIN	BAY - ORDER	Q	DRAW OPT	RV	RG	Y	X	Z	REMARKS	NC LENGTH FLAG	EXCEPTIONS	RUN NUMBER
DATA L		C04D1												1-PIN RUN	177
DATA XFER H		A07B1		1-01 *	P						1		1-4/8		178
DATA XFER H		A09B1		1-02 *											178
DATA XFER H				1									1-4/8		178
DC LO L		A09J1		1-01 *							1		4-2/8		179
DC LO L		B04J1		1-02 *	P						2		1-4/8		179
DC LO L		B06J1		1-03 *											179
DC LO L				1									5-6/8		179
DD TRK 0(1) H		C06D1		1-01 *							2		4-4/8		180
DD TRK 0(1) H		D01E2		1-02 *							1		8-1/8		180
DD TRK 0(1) H		F04R1		1-03 *											180
DD TRK 0(1) H				1									12-5/8		180
DD TRK 0(1) L		C01V1		1-01 *							1		7-5/8		181
DD TRK 0(1) L		F04A1		1-02 *											181
DD TRK 0(1) L				1									7-5/8		181
DD TRK 1(1) H		C06C1		1-01 *							2		4-5/8		182
DD TRK 1(1) H		D03E2		1-02 *							1		7-1/8		182
DD TRK 1(1) H		F04B1		1-03 *											182
DD TRK 1(1) H				1									11-6/8		182
DD TRK 1(1) L		C03V1		1-01 *							1		7-5/8		183
DD TRK 1(1) L		F04H2		1-02 *											183
DD TRK 1(1) L				1									7-5/8		183
DD TRK 2(1) H		C06A1		1-01 *							1		9-3/8		184
DD TRK 2(1) H		E01R2		1-02 *							2		4-1/8		184
DD TRK 2(1) H		F04P1		1-03 *											184
DD TRK 2(1) H				1									13-4/8		184
DD TRK 2(1) L		E01P1		1-01 *							1		2-5/8		185
DD TRK 2(1) L		F04B1		1-02 *											185
DD TRK 2(1) L				1									2-5/8		185
DD TRK 3(1) H		C06D2		1-01 *							1		10-1/8		186
DD TRK 3(1) H		F03F2		1-02 *	P						2		1-3/8		186
DD TRK 3(1) H		F04N1		1-03 *											186
DD TRK 3(1) H				1									11-4/8		186
DD TRK 3(1) L		F03J1		1-01 *	P						1		1-1/8		187
DD TRK 3(1) L		F04K2		1-02 *											187
DD TRK 3(1) L				1									1-1/8		187
DD TRK 4(1) H		F01F2		1-01 *							1		2-5/8		188
DD TRK 4(1) H		F04R2		1-02 *	P						2		1-3/8		188
DD TRK 4(1) H		F06V1		1-03 *											188
DD TRK 4(1) H				1									4-0/8		188
DD TRK 4(1) L		F01J1		1-01 *							1		2-5/8		189
DD TRK 4(1) L		F04D2		1-02 *											189
DD TRK 4(1) L				1									2-5/8		189

RUN NAME	A/P	PIN NAME	ORDER PIN	BAY - ORDER	Q	DRAW OPT	RV	RG	Y	X	Z	REMARKS	NC LENGTH FLAG	EXCEPTIONS	RUN NUMBER
DD TRK 5(1) H		D02E2		1-01 *							1		7-7/8		190
DD TRK 5(1) H		F04S2		1-02 *	P						2		1-5/8		190
DD TRK 5(1) H		F06T2		1-03 *											190
DD TRK 5(1) H				1									9-4/8		190
DD TRK 5(1) L		C02V1		1-01 *							1		7-5/8		191
DD TRK 5(1) L		F04E1		1-02 *											191
DD TRK 5(1) L				1									7-5/8		191
DD TRK 6(1) H		F02P2		1-01 *							2		1-6/8		192
DD TRK 6(1) H		F04N2		1-02 *	P						1		1-5/8		192
DD TRK 6(1) H		F06S2		1-03 *											192
DD TRK 6(1) H				1									3-3/8		192
DD TRK 6(1) L		F02J1		1-01 *	P						1		1-7/8		193
DD TRK 6(1) L		F04E2		1-02 *											193
DD TRK 6(1) L				1									1-7/8		193
DD TRK 7(1) H		E03R2		1-01 *							1		3-1/8		194
DD TRK 7(1) H		F04M2		1-02 *	P						2		1-4/8		194
DD TRK 7(1) H		F06U1		1-03 *											194
DD TRK 7(1) H				1									4-5/8		194
DD TRK 7(1) L		E03P1		1-01 *							1		3-1/8		195
DD TRK 7(1) L		F04F2		1-02 *											195
DD TRK 7(1) L				1									3-1/8		195
DD TRK P H		C06U1		1-01 *							1		6-7/8		196
DD TRK P H		E02R2		1-02 *							2		3-7/8		196
DD TRK P H		F04P2		1-03 *											196
DD TRK P H				1									10-6/8		196
DD TRK P L		E02P1		1-01 *							1		3-3/8		197
DD TRK P L		F04H1		1-02 *											197
DD TRK P L				1									3-3/8		197
DEM H		A09U2		1-01 *							1		4-1/8		198
DEM H		B06R1		1-02 *											198
DEM H				1									4-1/8		198
DEN 0 (SB) H		D06L2												1-PIN RUN	199
DEN 1(0) H		D06T2												1-PIN RUN	200
DEN 2 L		B01P1		1-01 *							1		4-5/8		201
DEN 2 L		C06U2		1-02 *											201
DEN 2 L				1									4-5/8		201
DEN 2(1) H		C06V2		1-01 *	P						1		1		202
DEN 2(1) H		C07V2		1-02 *							1		2-3/8		202
DEN 2(1) H		D09H2		1-03 *											202
DEN 2(1) H				1									3-3/8		202
DPA REC H		A06S1		1-01 *							1		2-1/8		203
DPA REC H		A08E1		1-02 *											203
DPA REC H				1									2-1/8		203

RUN NAME	A/P	PIN NAME	ORDER PIN	BAY - ORDER	Q	DRAW OPT	RV	RG	Y	X	Z	REMARKS	NC LENGTH FLAG	EXCEPTIONS	RUN NUMBER
DPA TM L		A06U1		1-01 *							1		2-6/8		204
DPA TM L		A08D1		1-02 *							2		12-1/8		204
DPA TM L		E08P1		1-03 *											204
DPA TM L				1									14-7/8		204
DROPPED BIT 0 H		C01E1												1-PIN RUN	205
DROPPED BIT 1 H		C03E1												1-PIN RUN	206
DROPPED BIT 2 H		C01U1												1-PIN RUN	207
DROPPED BIT 3 H		E03S1												1-PIN RUN	208
DROPPED BIT 4 H		E01S1												1-PIN RUN	209
DROPPED BIT 5 H		C02E1												1-PIN RUN	210
DROPPED BIT 6 H		E02S1												1-PIN RUN	211
DROPPED BIT 7 H		C03U1												1-PIN RUN	212
DROPPED BIT P H		C02U1												1-PIN RUN	213
DRV CLR PLS H		A09P2		1-01 *							1		5-7/8		214
DRV CLR PLS H		B01D2		1-02 *											214
DRV CLR PLS H				1									5-7/8		214
DRV SET PLS H		C04S2		1-01 *	P						1		1		215
DRV SET PLS H		C05S2		1-02 *	P						2		1-4/8		215
DRV SET PLS H		C07S2		1-03 *	P						2		1-4/8		215
DRV SET PLS H		C09S2		1-04 *							1		7-6/8		215
DRV SET PLS H		A01N1		1-05 *											215
DRV SET PLS H				1									11-6/8		215
DRV SET PLS L		C05E2		1-01 *	P						1		1-4/8		216
DRV SET PLS L		C07E2		1-02 *	P						2		1-6/8		216
DRV SET PLS L		C09P1		1-03 *							1		2-4/8		216
DRV SET PLS L		D06A1		1-04 *											216
DRV SET PLS L				1									5-6/8		216
DS ENABLE		C09B2		1-01 *							1		8-6/8		217
DS ENABLE		F09D2		1-02 *											217
DS ENABLE				1									8-6/8		217
DS0		B06F1		1-01 *	P						1		2-3/8		218
DS0		B09M1		1-02 *											218
DS0				1									2-3/8		218
DS1		B06U1		1-01 *	P						1		2-5/8		219
DS1		B09K1		1-02 *											219
DS1				1									2-5/8		219
DS2		B06V2		1-01 *							1		2-2/8		220
DS2		B09J1		1-02 *											220
DS2				1									2-2/8		220

RUN NAME	A/P	PIN NAME	ORDER PIN	BAY = ORDER	Q	DRAW OPT	RV	RG	Y	X	Z	REMARKS	NC LENGTH FLAG	EXCEPTIONS	RUN NUMBER
DT0 H		B03H2		1=01 *							1		2=5/8		221
DT0 H		B07J2		1=02 *											221
DT0 H				1									2=5/8		221
DT1 H		A03M2		1=01 *							1		1=6/8		222
DT1 H		A01M1		1=02 *							2		3=7/8		222
DT1 H		A07N2		1=03 *											222
DT1 H				1									5=5/8		222
DT2 (SB) L		B03P1		1=01 *							1		5=1/8		223
DT2 (SB) L		A01D1		1=02 *							2		5=2/8		223
DT2 (SB) L		B07K1		1=03 *											223
DT2 (SB) L				1									10=3/8		223
EA0DTE(1) H		C06N2		1=01 *		P					1		1		224
EA0DTE(1) H		C07N2		1=02 *		P					2		1=4/8		224
EA0DTE(1) H		C09N2		1=03 *											224
EA0DTE(1) H				1									2=4/8		224
EBL L		B05L2		1=01 *		P					1		2=4/8		225
EBL L		B09L2		1=02 *											225
EBL L				1									2=4/8		225
ECR H		A04P1		1=01 *		P					1		0=1/8		226
ECR H		A04R1		1=02 *		P					2		0=5/8		226
ECR H		A05P1		1=03 *		P					2		0=1/8		226
ECR H		A06P1		1=04 *		P					2		3=1/8		226
ECR H		A09F2		1=06 *											226
ECR H				1									4=5/8		226
ECS H		A09J2		1=01 *							1		3=5/8		227
ECS H		A05U2		1=02 *		P					2		1		227
ECS H		A04U2		1=03 *							1		1=7/8		227
ECS H		B04F2		1=04 *		P					2		1		227
ECS H		B05F2		1=05 *		P					1		1		227
ECS H		B06F2		1=06 *							2		1=5/8		227
ECS H		B06S2		1=07 *		P					1		1		227
ECS H		B05S2		1=08 *		P					2		1		227
ECS H		B04S2		1=09 *											227
ECS H				1									12=1/8		227
EDS H		A05B1		1=01 *		P					1		1		228
EDS H		A04B1		1=02 *		P					2		1=4/8		228
EDS H		A06B1		1=03 *		P					2		2=3/8		228
EDS H		A06U2		1=04 *		P					2		2=5/8		228
EDS H		A09M2		1=05 *											228
EDS H				1									7=4/8		228
EIGHTY L		D04C1		1=01 *		P					1		2		229
EIGHTY L		D07C1		1=02 *											229
EIGHTY L				1									2=0/8		229

RUN NAME	A/P	PIN NAME	ORDER PIN	BAY = ORDER	Q	DRAW OPT	RV	RG	Y	X	Z	REMARKS	NC LENGTH FLAG	EXCEPTIONS	RUN NUMBER
END H		A07B2		1=01 *							1		4=7/8		230
END H		B01E2		1=02 *											230
END H				1									4=7/8		230
ENABLE SYNC(1)		C04E1		1=01 *							1		3=3/8		231
ENABLE SYNC(1)		D03C1		1=02 *		P					2		1		231
ENABLE SYNC(1)		D02C1		1=03 *							1		1		231
ENABLE SYNC(1)		D01C1		1=04 *											231
ENABLE SYNC(1)				1									5=3/8		231
ENBL SHDN CNTR		D07M2		1=01 *		P					1		1=4/8		232
ENBL SHDN CNTR		D05M2		1=02 *							1		4=3/8		232
ENBL SHDN CNTR		E04V1		1=03 *							2		3=3/8		232
ENBL SHDN CNTR		F09A1		1=04 *											232
ENBL SHDN CNTR				1									9=2/8		232
END PT H		A02M2		1=01 *							1		5=1/8		233
END PT H		B07R1		1=02 *							2		2=5/8		233
END PT H		C09F1		1=03 *											233
END PT H				1									7=6/8		233
ENV 1(1) H		D01K2		1=01 *							1		2=7/8		234
ENV 1(1) H		D04B2		1=02 *											234
ENV 1(1) H				1									2=7/8		234
ENV 2(1) H		C01H2		1=01 *							1		1=6/8		235
ENV 2(1) H		C04H1		1=02 *											235
ENV 2(1) H				1									1=6/8		235
ENV 3(1) H		F01J2		1=01 *							1		1=6/8		236
ENV 3(1) H		F04J1		1=02 *											236
ENV 3(1) H				1									1=6/8		236
ENV 4(1) H		D02K2		1=01 *		P					1		1=3/8		237
ENV 4(1) H		D04E1		1=02 *											237
ENV 4(1) H				1									1=3/8		237
ENV 5(1) H		C02H2		1=01 *		P					1		1=4/8		238
ENV 5(1) H		C04H2		1=02 *											238
ENV 5(1) H				1									1=4/8		238
ENV 6(1) H		F02J2		1=01 *		P					1		1=4/8		239
ENV 6(1) H		F04J2		1=02 *											239
ENV 6(1) H				1									1=4/8		239
ENV 7(1) H		D03K2		1=01 *		P					1		1		240
ENV 7(1) H		D04H2		1=02 *											240
ENV 7(1) H				1									1=0/8		240
ENV 8(1) H		C03H2		1=01 *		P					1		0=5/8		241
ENV 8(1) H		C04J1		1=02 *											241
ENV 8(1) H				1									0=5/8		241
ENV 9(1) H		F03J2		1=01 *		P					1		0=1/8		242
ENV 9(1) H		F04K1		1=02 *											242
ENV 9(1) H				1									0=1/8		242

RUN NAME	A/P	PIN NAME	ORDER PIN	BAY = ORDER	Q	DRAW OPT	RV	RG	Y	X	Z	REMARKS	NC LENGTH FLAG	EXCEPTIONS	RUN NUMBER
EOR L		C07H1		1=01 *	P						1		1=4/8		243
EOR L		C09H1		1=02 *							1		5=7/8		243
EOR L		D05T2		1=03 *											243
EOR L				1									7=3/8		243
ERASE L		D07U1		1=01 *	P						1		2=5/8		244
ERASE L		D09E1		1=02 *											244
ERASE L				1									2=5/8		244
ERDS(0) H		C05H2												1=PIN RUN	245
ERDS(1) H		D05M1												1=PIN RUN	246
ERROR RESET L		B04L2		1=01 *	P						1		1		247
ERROR RESET L		B05L2		1=02 *	P						2		1=4/8		247
ERROR RESET L		F07L2		1=03 *											247
ERROR RESET L				1									2=4/8		247
ES/IL TMRK L		C04D2		1=01 *	P						1		1		248
ES/IL TMRK L		C05D2		1=02 *							1		10=7/8		248
ES/IL TMRK L		F09M1		1=03 *											248
ES/IL TMRK L				1									11=7/8		248
EVEN PAR H		B09D1		1=01 *							2		3=7/8		249
EVEN PAR H		C08L2		1=02 *							1		8=3/8		249
EVEN PAR H		F06B2		1=03 *											249
EVEN PAR H				1									12=2/8		249
EXC BY CONT(1) L		C09D1												1=PIN RUN	250
EXC REC H		B05L1		1=01 *							1		2=5/8		251
EXC REC H		B09K2		1=02 *											251
EXC REC H				1									2=5/8		251
EXC TM L		B05P2		1=01 *	P						1		2=4/8		252
EXC TM L		B09P2		1=02 *											252
EXC TM L				1									2=4/8		252
F1 H		E06M2		1=01 *							1		2		253
F1 H		E09M2		1=02 *											253
F1 H				1									2=0/8		253
F2 H		E06N2		1=01 *	P						1		2		254
F2 H		E09N2		1=02 *											254
F2 H				1									2=0/8		254
F3 H		E06R2		1=01 *	P						1		2		255
F3 H		E09R2		1=02 *											255
F3 H				1									2=0/8		255
F4 H		C06S2		1=01 *							1		7=1/8		256
F4 H		E09S2		1=02 *											256
F4 H				1									7=1/8		256

RUN NAME	A/P	PIN NAME	ORDER PIN	BAY = ORDER	Q	DRAW OPT	RV	RG	Y	X	Z	REMARKS	NC LENGTH FLAG	EXCEPTIONS	RUN NUMBER
F5 H		C06T2		1=01 *							1		7=1/8		257
F5 H		E09T2		1=02 *											257
F5 H				1									7=1/8		257
FCCLK H		A08J2		1=01 *	P						1		0=1/8		258
FCCLK H		A09K1		1=02 *											258
FCCLK H				1									0=1/8		258
FCOF(1) L		C07H2		1=01 *	P						1		1=5/8		259
FCOF(1) L		C09E2		1=02 *											259
FCOF(1) L				1									1=5/8		259
FMK PATTERN H		F04B2												1=PIN RUN	260
FMT 0(1) H		B08M2		1=01 *							1		6=1/8		261
FMT 0(1) H		D06F1		1=02 *											261
FMT 0(1) H				1									6=1/8		261
FMT 1(1) H		B08N2		1=01 *							1		7=3/8		262
FMT 1(1) H		D06U2		1=02 *											262
FMT 1(1) H				1									7=3/8		262
FMT 2(1) H		D06V2		1=01 *	P						1		1=2/8		263
FMT 2(1) H		D08S1		1=02 *											263
FMT 2(1) H				1									1=2/8		263
FMT 3(1) H		B08T2		1=01 *							1		10=3/8		264
FMT 3(1) H		F06B1		1=02 *											264
FMT 3(1) H				1									10=3/8		264
FORTY H		D04D2		1=01 *							1		2		265
FORTY H		D07D2		1=02 *											265
FORTY H				1									2=0/8		265
FWD CRCS(1) H		C05B2												1=PIN RUN	266
FWD H		A02A1		1=01 *	P						1		0=1/8		267
FWD H		A02B1		1=02 *	P						2		0=1/8		267
FWD H		A02C1		1=03 *	P						2		2=3/8		267
FWD H		A02U2		1=04 *							1		6=7/8		267
FWD H		C09R2		1=05 *	P						2		1		267
FWD H		C08R2		1=06 *	P						1		2		267
FWD H		C05R2		1=07 *											267
FWD H				1									12=4/8		267
FWD L		D05H1												1=PIN RUN	268
FWD LRCS(1) H		C05U2												1=PIN RUN	269

RUN NAME	A/P	PIN NAME	ORDER PIN	BAY - ORDER	Q	DRAW OPT	RV	RG	Y	X	Z	REMARKS	NC LENGTH FLAG	EXCEPTIONS	RUN NUMBER
GND 01		A01C2		1-01 *	P						1		2-1/8		270
GND 01		A01T1		1-02 *	P						2		1-5/8		270
GND 01		B01C2		1-03 *	P						1		2-1/8		270
GND 01		B01T1		1-04 *	P						2		1-3/8		270
GND 01		C01C2		1-05 *	P						1		2-1/8		270
GND 01		C01T1		1-06 *	P						2		1-5/8		270
GND 01		D01C2		1-07 *	P						1		2-1/8		270
GND 01		D01T1		1-08 *	P						2		1-3/8		270
GND 01		E01C2		1-09 *	P						1		2-1/8		270
GND 01		E01T1		1-10 *	P						2		1-5/8		270
GND 01		F01C2		1-11 *	P						1		2-1/8		270
GND 01		F01T1		1-12 *											270
GND 01				1									20-3/8		270
GND 02		A02C2		1-01 *	P						1		2-1/8		271
GND 02		A02T1		1-02 *	P						2		1-5/8		271
GND 02		B02C2		1-03 *	P						1		2-1/8		271
GND 02		B02T1		1-04 *	P						2		1-3/8		271
GND 02		C02C2		1-05 *	P						1		2-1/8		271
GND 02		C02T1		1-06 *	P						2		1-5/8		271
GND 02		D02C2		1-07 *	P						1		2-1/8		271
GND 02		D02T1		1-08 *	P						2		1-3/8		271
GND 02		E02C2		1-09 *	P						1		2-1/8		271
GND 02		E02T1		1-10 *	P						2		1-5/8		271
GND 02		F02C2		1-11 *	P						1		2-1/8		271
GND 02		F02T1		1-12 *											271
GND 02				1									20-3/8		271
GND 03		A03C2		1-01 *	P						1		2-1/8		272
GND 03		A03T1		1-02 *	P						2		1-5/8		272
GND 03		B03C2		1-03 *	P						1		2-1/8		272
GND 03		B03T1		1-04 *	P						2		1-3/8		272
GND 03		C03C2		1-05 *	P						1		2-1/8		272
GND 03		C03T1		1-06 *	P						2		1-5/8		272
GND 03		D03C2		1-07 *	P						1		2-1/8		272
GND 03		D03T1		1-08 *	P						2		1-3/8		272
GND 03		E03C2		1-09 *	P						1		2-1/8		272
GND 03		E03T1		1-10 *	P						2		1-5/8		272
GND 03		F03C2		1-11 *	P						1		2-1/8		272
GND 03		F03T1		1-12 *							2		13-5/8		272
GND 03		A03V2		1-13 *											272
GND 03				1									34-0/8		272

RUN NAME	A/P	PIN NAME	ORDER PIN	BAY - ORDER	Q	DRAW OPT	RV	RG	Y	X	Z	REMARKS	NC LENGTH FLAG	EXCEPTIONS	RUN NUMBER
GND 04		A04C2		1-01 *	P						1		2-1/8		273
GND 04		A04T1		1-02 *	P						2		1-5/8		273
GND 04		B04C2		1-03 *	P						1		1-3/8		273
GND 04		B04N1		1-04 *	P						2		1-3/8		273
GND 04		B04T1		1-05 *	P						1		1-3/8		273
GND 04		C04C2		1-06 *	P						2		2-1/8		273
GND 04		C04T1		1-07 *	P						1		1-5/8		273
GND 04		D04C2		1-08 *	P						2		2-1/8		273
GND 04		D04T1		1-09 *	P						1		1-3/8		273
GND 04		E04C2		1-10 *	P						2		2-1/8		273
GND 04		E04T1		1-11 *	P						1		1-5/8		273
GND 04		F04C2		1-12 *	P						2		2-1/8		273
GND 04		F04T1		1-13 *											273
GND 04				1									21-0/8		273
GND 05		A05C2		1-01 *	P						1		2-1/8		274
GND 05		A05T1		1-02 *	P						2		1-5/8		274
GND 05		B05C2		1-03 *	P						1		1-5/8		274
GND 05		B05N1		1-04 *	P						2		1		274
GND 05		B05T1		1-05 *	P						1		1-3/8		274
GND 05		C05C2		1-06 *	P						2		2-1/8		274
GND 05		C05T1		1-07 *	P						1		1-5/8		274
GND 05		D05C2		1-08 *	P						2		2-1/8		274
GND 05		D05T1		1-09 *	P						1		1-3/8		274
GND 05		E05C2		1-10 *	P						2		2-1/8		274
GND 05		E05T1		1-11 *	P						1		1-5/8		274
GND 05		F05C2		1-12 *	P						2		2-1/8		274
GND 05		F05T1		1-13 *											274
GND 05				1									20-7/8		274
GND 06		A06C2		1-01 *	P						1		2-1/8		275
GND 06		A06T1		1-02 *	P						2		1-5/8		275
GND 06		B06C2		1-03 *	P						1		1-5/8		275
GND 06		B06N1		1-04 *	P						2		1		275
GND 06		B06T1		1-05 *	P						1		1-3/8		275
GND 06		C06C2		1-06 *	P						2		2-1/8		275
GND 06		C06T1		1-07 *	P						1		1-5/8		275
GND 06		D06C2		1-08 *	P						2		2-1/8		275
GND 06		D06T1		1-09 *	P						1		1-3/8		275
GND 06		E06C2		1-10 *	P						2		2-1/8		275
GND 06		E06T1		1-11 *	P						1		1-5/8		275
GND 06		F06C2		1-12 *	P						2		2-1/8		275
GND 06		F06T1		1-13 *											275
GND 06				1									20-7/8		275

RUN NAME	A/P	PIN NAME	ORDER PIN	BAY = ORDER	Q	DRAW OPT	RV	RG	Y	X	Z	REMARKS	NC LENGTH FLAG	EXCEPTIONS	RUN NUMBER
GND 07		A07C2		1=01 *	P						1		2=1/8		276
GND 07		A07T1		1=02 *							2		1=5/8		276
GND 07		B07C2		1=03 *	P						1		2=1/8		276
GND 07		B07T1		1=04 *							2		1=3/8		276
GND 07		C07C2		1=05 *	P						1		2=1/8		276
GND 07		C07T1		1=06 *							2		1=5/8		276
GND 07		D07C2		1=07 *	P						1		2=1/8		276
GND 07		D07T1		1=08 *							2		1=3/8		276
GND 07		E07C2		1=09 *	P						1		2=1/8		276
GND 07		E07T1		1=10 *							2		1=5/8		276
GND 07		F07C2		1=11 *	P						1		2=1/8		276
GND 07		F07T1		1=12 *											276
GND 07				1									20=3/8		276
GND 08		A08C2		1=01 *	P						1		2=1/8		277
GND 08		A08T1		1=02 *							2		1=5/8		277
GND 08		B08C2		1=03 *	P						1		2=1/8		277
GND 08		B08T1		1=04 *							2		1=3/8		277
GND 08		C08C2		1=05 *	P						1		2=1/8		277
GND 08		C08T1		1=06 *							2		1=5/8		277
GND 08		D08C2		1=07 *	P						1		2=1/8		277
GND 08		D08T1		1=08 *							2		1=3/8		277
GND 08		E08C2		1=09 *	P						1		2=1/8		277
GND 08		E08T1		1=10 *							2		1=5/8		277
GND 08		F08C2		1=11 *	P						1		2=1/8		277
GND 08		F08T1		1=12 *											277
GND 08				1									20=3/8		277
GND 09		A09C2		1=01 *	P						1		2=1/8		278
GND 09		A09T1		1=02 *							2		1=5/8		278
GND 09		B09C2		1=03 *	P						1		2=1/8		278
GND 09		B09T1		1=04 *							2		1=3/8		278
GND 09		C09C2		1=05 *	P						1		2=1/8		278
GND 09		C09T1		1=06 *							2		1=5/8		278
GND 09		D09C2		1=07 *	P						1		2=1/8		278
GND 09		D09T1		1=08 *							2		1=3/8		278
GND 09		E09C2		1=09 *	P						1		2=1/8		278
GND 09		E09T1		1=10 *							2		1=5/8		278
GND 09		F09C2		1=11 *	P						1		2=1/8		278
GND 09		F09T1		1=12 *											278
GND 09				1									20=3/8		278
GO BUF H		C06K2		1=01 *	P						1		1		279
GO BUF H		C07K2		1=02 *	P						2		1=4/8		279
GO BUF H		C09K2		1=03 *							2		5=3/8		279
GO BUF H		E08D2		1=04 *							1		2=5/8		279
GO BUF H		E05K2		1=05 *											279
GO BUF H				1									10=4/8		279
GO L		F07B1		1=01 *	P						1		1=4/8		280
GO L		F09B1		1=02 *											280
GO L				1									1=4/8		280

RUN NAME	A/P	PIN NAME	ORDER PIN	BAY = ORDER	Q	DRAW OPT	RV	RG	Y	X	Z	REMARKS	NC LENGTH FLAG	EXCEPTIONS	RUN NUMBER
IDB(1) H		D04U2		1=01 *	P						1		2		281
IDB(1) H		D07U2		1=02 *							1		10=5/8		281
IDB(1) H		B01C1		1=03 *											281
IDB(1) H				1									12=5/8		281
II CC L		F05M1		1=01 *	P						1		1		282
II CC L		F06M1		1=02 *											282
II CC L				1									1=0/8		282
INC COND H		D03E1		1=01 *							1		4=1/8		283
INC COND H		E04J2		1=02 *											283
INC COND H				1									4=1/8		283
INC DATA H		D03D1		1=01 *							1		7=7/8		284
INC DATA H		F04V1		1=02 *											284
INC DATA H				1									7=7/8		284
INC ERROR L		F05J2												1=PIN RUN	285
INC FNK L		B01J2		1=01 *							1		13=3/8		286
INC FNK L		F06L1		1=02 *											286
INC FNK L				1									13=3/8		286
INC PREAMBLE L		A07A1		1=01 *							1		14=5/8		287
INC PREAMBLE L		F06F1		1=02 *											287
INC PREAMBLE L				1									14=5/8		287
INC/VPE L		F04F1		1=01 *	P						1		1		288
INC/VPE L		F05F1		1=02 *	P						2		2=3/8		288
INC/VPE L		F09H1		1=03 *											288
INC/VPE L				1									3=3/8		288
INIT H		B09R1		1=01 *	P						1		2=6/8		289
INIT H		B09R2		1=02 *											289
INIT H				1									2=6/8		289
INIT PLS(1) H		A01U2		1=01 *							1		13=3/8		290
INIT PLS(1) H		F04D1		1=02 *	P						2		1		290
INIT PLS(1) H		F05D1		1=03 *	P						1		2=4/8		290
INIT PLS(1) H		F09D1		1=04 *											290
INIT PLS(1) H				1									16=7/8		290
INIT PLS(1) L		F09C1		1=01 *							1		2=1/8		291
INIT PLS(1) L		F05D2		1=02 *											291
INIT PLS(1) L				1									2=1/8		291
INT PAR		F09N1												1=PIN RUN	292
IRD H		A03U2		1=01 *							1		9=1/8		293
IRD H		E04A1		1=02 *							2		4=7/8		293
IRD H		F06D2		1=03 *											293
IRD H				1									14=0/8		293
LCTOD(1) H		C09L1		1=01 *							1		7=7/8		294
LCTOD(1) H		E06U2		1=02 *											294
LCTOD(1) H				1									7=7/8		294

RUN NAME	A/P	PIN NAME	ORDER PIN	BAY - ORDER	O	DRAW OPT	RV	RG	Y	X	Z	REMARKS	NC LENGTH FLAG	EXCEPTIONS	RUN NUMBER
LRC STRB (SB) L		A01K2		1-01 *							1		3-4/8		295
LRC STRB (SB) L		A07K2		1-02 *							2		10-3/8		295
LRC STRB (SB) L		D05S1		1-03 *											295
LRC STRB (SB) L				1									13-7/8		295
MAINT 0(1) H		B01U2		1-01 *							1		13-1/8		296
MAINT 0(1) H		F06R2		1-02 *											296
MAINT 0(1) H				1									13-1/8		296
MAINT RDS L		C05T2		1-01 *							1		6-3/8		297
MAINT RDS L		E06V2		1-02 *											297
MAINT RDS L				1									6-3/8		297
MAS CLR L		D06S2		1-01 *	P						1		1		298
MAS CLR L		D07S2		1-02 *	P						2		1		298
MAS CLR L		D08S2		1-03 *	P						2		1		298
MAS CLR L		D09S2		1-04 *							1		12-1/8		298
MAS CLR L		A01V1		1-05 *											298
MAS CLR L				1									15-1/8		298
MAS FAIL H		B06T2		1-01 *							1		2-3/8		299
MAS FAIL H		B09E2		1-02 *											299
MAS FAIL H				1									2-3/8		299
MASS BUS ENBL H		A04J1		1-01 *	P						1		1		300
MASS BUS ENBL H		A05J1		1-02 *	P						2		1		300
MASS BUS ENBL H		A06J1		1-03 *							1		1-2/8		300
MASS BUS ENBL H		A06R1		1-04 *							2		2-3/8		300
MASS BUS ENBL H		B06H1		1-05 *	P						2		1-4/8		300
MASS BUS ENBL H		B04H1		1-06 *	P						2		1		300
MASS BUS ENBL H		B05H1		1-07 *	P						2		0-4/8		300
MASS BUS ENBL H		B05K1		1-08 *	P						2		0-5/8		300
MASS BUS ENBL H		B04N1		1-09 *	P						2		0-4/8		300
MASS BUS ENBL H		B04R2		1-10 *	P						2		0-1/8		300
MASS BUS ENBL H		B05S1		1-11 *	P						2		0-5/8		300
MASS BUS ENBL H		B05R2		1-12 *	P						2		0-1/8		300
MASS BUS ENBL H		B06S1		1-13 *	P						2		0-5/8		300
MASS BUS ENBL H		B06R2		1-14 *							1		2-2/8		300
MASS BUS ENBL H		B09C1		1-15 *											300
MASS BUS ENBL H				1									13-4/8		300
MID POSTMBLE(0) H		C04B1		1-01 *	P						1		1-4/8		301
MID POSTMBLE(0) H		C06B1		1-02 *											301
MID POSTMBLE(0) H				1									1-4/8		301
MM EOR CLR L		E07F2		1-01 *							1		4-1/8		302
MM EOR CLR L		F06H1		1-02 *											302
MM EOR CLR L				1									4-1/8		302
MMCLK(1) H		D06C1		1-01 *							1		4-3/8		303
MMCLK(1) H		E07K2		1-02 *											303
MMCLK(1) H				1									4-3/8		303

RUN NAME	A/P	PIN NAME	ORDER PIN	BAY - ORDER	O	DRAW OPT	RV	RG	Y	X	Z	REMARKS	NC LENGTH FLAG	EXCEPTIONS	RUN NUMBER
MOL H		B03V2		1-01 *							1		2-7/8		304
MOL H		B07M1		1-02 *											304
MOL H				1									2-7/8		304
MOL L		D07A1		1-01 *	P						1		1-4/8		305
MOL L		D09A1		1-02 *											305
MOL L				1									1-4/8		305
MULT DD TRK L		E04H1												1=PIN RUN	306
NO CHAR RD L		D05R2												1=PIN RUN	307
NORMAL MODE		C08C1												1=PIN RUN	308
NRZ FMK CHAR L		F05N2												1=PIN RUN	309
NSG(1) L		F07N2		1-01 *	P						1		1-3/8		310
NSG(1) L		F09L1		1-02 *											310
NSG(1) L				1									1-3/8		310
OCC TM(1) H		B04M1		1-01 *	P						1		1		311
OCC TM(1) H		B05M1		1-02 *	P						2		0-5/8		311
OCC TM(1) H		B05J1		1-03 *	P						2		0-5/8		311
OCC TM(1) H		B06M1		1-04 *							1		0-1/8		311
OCC TM(1) H		D09C1		1-05 *											311
OCC TM(1) H				1									0-3/8		311
OCC TM(1) L		B06P2		1-01 *	P						1		1-0/8		312
OCC TM(1) L		B09P1		1-02 *											312
OCC TM(1) L				1									1-0/8		312
OCCUPIED REC H		B06L1		1-01 *							1		6-1/8		313
OCCUPIED REC H		D09B1		1-02 *											313
OCCUPIED REC H				1									6-1/8		313
ODD FRM H		B08F2												1=PIN RUN	314
ONE DET 0 L		C01F2		1-01 *							1		7-3/8		315
ONE DET 0 L		E04L1		1-02 *											315
ONE DET 0 L				1									7-3/8		315
ONE DET 1 L		C03F2		1-01 *							1		6-5/8		316
ONE DET 1 L		E04M2		1-02 *											316
ONE DET 1 L				1									6-5/8		316
ONE DET 2 L		D01V2		1-01 *							1		2-2/8		317
ONE DET 2 L		E04K1		1-02 *											317
ONE DET 2 L				1									2-2/8		317
ONE DET 3 L		E04N2		1-01 *							1		3-1/8		318
ONE DET 3 L		F03E1		1-02 *											318
ONE DET 3 L				1									3-1/8		318
ONE DET 4 L		E04M1		1-01 *							1		3-2/8		319
ONE DET 4 L		F01E1		1-02 *											319
ONE DET 4 L				1									3-2/8		319

RUN NAME	A/P	PIN NAME	ORDER PIN	BAY - ORDER	Q	DRAW OPT	RV	RG	Y	X	Z	REMARKS	NC LENGTH FLAG	EXCEPTIONS	RUN NUMBER
ONE DET 5 L		C02F2		1-01 *							1		7-1/8		320
ONE DET 5 L		E04N1		1-02 *											320
ONE DET 5 L				1									7-1/8		320
ONE DET 6 L		E04K2		1-01 *							1		3-7/8		321
ONE DET 6 L		F02E1		1-02 *											321
ONE DET 6 L				1									3-7/8		321
ONE DET 7 L		D03V2		1-01 *							1		2-7/8		322
ONE DET 7 L		E04R2		1-02 *											322
ONE DET 7 L				1									2-7/8		322
ONE DET P L		D02V2												1=PIN RUN	323
ONE READ H		D04F1												1=PIN RUN	324
ONES L		C04L2		1-01 *	P						1		2		325
ONES L		C07L2		1-02 *											325
ONES L				1									2-0/8		325
OPI(1) H		D07B2		1-01 *	P						1		1-4/8		326
OPI(1) H		D09B2		1-02 *											326
OPI(1) H				1									1-4/8		326
OVERFLOW A,B,C, L		D04V1		1-01 *							1		1-2/8		327
OVERFLOW A,B,C, L		E03A1		1-02 *	P						2		1		327
OVERFLOW A,B,C, L		E02A1		1-03 *							1		1		327
OVERFLOW A,B,C, L		E01A1		1-04 *											327
OVERFLOW A,B,C, L				1									3-2/8		327
PE WRT CLK ENBL L		D04S1		1-01 *	P						1		2		328
PE WRT CLK ENBL L		D07S1		1-02 *											328
PE WRT CLK ENBL L				1									2-0/8		328
PEF/LRC L		D04V2		1-01 *	P						1		1		329
PEF/LRC L		D05V2		1-02 *							1		5-7/8		329
PEF/LRC L		F09F1		1-03 *											329
PEF/LRC L				1									6-7/8		329
PERR AND ONE DD TRK H		D01M2		1-01 *							1		1		330
PERR AND ONE DD TRK H		D02M2		1-02 *	P						2		1		330
PERR AND ONE DD TRK H		D03M2		1-03 *	P						1		0-4/8		330
PERR AND ONE DD TRK H		D04K1		1-04 *											330
PERR AND ONE DD TRK H				1									2-4/8		330
PERR L		D04J1												1=PIN RUN	331
PES(SB) L		A03D1		1-01 *							1		5-5/8		332
PES(SB) L		B07J1		1-02 *											332
PES(SB) L				1									5-5/8		332

RUN NAME	A/P	PIN NAME	ORDER PIN	BAY - ORDER	Q	DRAW OPT	RV	RG	Y	X	Z	REMARKS	NC LENGTH FLAG	EXCEPTIONS	RUN NUMBER
PESB H		A03B1		1-01 *							1		8-7/8		333
PESB H		D04B1		1-02 *	P						2		1-4/8		333
PESB H		D06B1		1-03 *	P						2		1		333
PESB H		D07B1		1-04 *							1		4-3/8		333
PESB H		E08L1		1-05 *	P						2		3-7/8		333
PESB H		E03B1		1-06 *	P						2		1		333
PESB H		E02B1		1-07 *							1		1		333
PESB H		E01B1		1-08 *											333
PESB H				1									21-5/8		333
PESB L		A03C1		1-01 *							1		9-1/8		334
PESB L		D04D1		1-02 *	P						2		1		334
PESB L		D05D1		1-03 *	P						1		1-4/8		334
PESB L		D07D1		1-04 *	P						2		1-4/8		334
PESB L		D09D1		1-05 *							1		0-4/8		334
PESB L		D08D2		1-06 *											334
PESB L				1									13-5/8		334
PIP H		C09V2		1-01 *							1		2-2/8		335
PIP H		D07H2		1-02 *											335
PIP H				1									2-2/8		335
POS 0(0) H		C04P2		1-01 *	P						1		2		336
POS 0(0) H		C07P2		1-02 *											336
POS 0(0) H				1									2-0/8		336
POS 0(1) H		C04M2		1-01 *	P						1		2		337
POS 0(1) H		C07M2		1-02 *											337
POS 0(1) H				1									2-0/8		337
POST DETECT A,B,C H		C01S2		1-01 *							1		1		338
POST DETECT A,B,C H		C02S2		1-02 *	P						2		1		338
POST DETECT A,B,C H		C03S2		1-03 *	P						1		0-4/8		338
POST DETECT A,B,C H		C04S1		1-04 *											338
POST DETECT A,B,C H				1									2-4/8		338
POST OR PRE H		C04N1												1=PIN RUN	339
POST OR REC N ACT L		A03A1		1-01 *							1		11-1/8		340
POST OR REC N ACT L		D04T2		1-02 *											340
POST OR REC N ACT L				1									11-1/8		340
POSTAMBLE(0) H		D04E2		1-01 *							1		2		341
POSTAMBLE(0) H		D07E2		1-02 *											341
POSTAMBLE(0) H				1									2-0/8		341
PRE 0(1) L		D04L2		1-01 *	P						1		2		342
PRE 0(1) L		D07L2		1-02 *											342
PRE 0(1) L				1									2-0/8		342
PREAMBLE(0) H		E04U1												1=PIN RUN	343
PULSE(1) H		A09L1												1=PIN RUN	344

RUN NAME	A/P	PIN NAME	ORDER PIN	BAY - ORDER	Q	DRAW OPT	RV	RG	Y	X	Z	REMARKS	NC LENGTH FLAG	EXCEPTIONS	RUN NUMBER
PVN(1) H		F05A1		1-01 *	P						1		1		345
PVN(1) H		F06A1		1-02 *	P						2		1		345
PVN(1) H		F07A1		1-03 *							1		4-7/8		345
PVN(1) H		D08N1		1-04 *											345
PVN(1) H				1									6-7/8		345
R00 L		A09L2		1-01 *							1		11-1/8		346
R00 L		D06V1		1-02 *											346
R00 L				1									11-1/8		346
R01 L		A09A1		1-01 *							1		15-3/8		347
R01 L		F07H1		1-02 *											347
R01 L				1									15-3/8		347
R03 L		F06H2		1-01 *	P						1		2		348
R03 L		F09H2		1-02 *											348
R03 L				1									2-0/8		348
R04 L		A09M1												1=PIN RUN	349
R06 L		A09R1		1-01 *							1		13-7/8		350
R06 L		F07J1		1-02 *											350
R06 L				1									13-7/8		350
R07 L		A09D1		1-01 *							1		15-7/8		351
R07 L		F06M2		1-02 *											351
R07 L				1									15-7/8		351
R10 L		A09E1		1-01 *							1		15-3/8		352
R10 L		F07M1		1-02 *											352
R10 L				1									15-3/8		352
R11 L		A09F1		1-01 *							1		15-1/8		353
R11 L		F07K1		1-02 *	P						2		1		353
R11 L		F06K1		1-03 *											353
R11 L				1									16-1/8		353
RD 0 H		B02V2		1-01 *	P						1		3		354
RD 0 H		B07V2		1-02 *											354
RD 0 H				1									3-0/8		354
RD 1(SB) L		B02U2		1-01 *	P						1		3		355
RD 1(SB) L		B07U2		1-02 *											355
RD 1(SB) L				1									3-0/8		355
RD 2(SB) L		B02S2		1-01 *							1		3		356
RD 2(SB) L		B07S2		1-02 *											356
RD 2(SB) L				1									3-0/8		356
RD 3 H		B02R2		1-01 *							1		2-5/8		357
RD 3 H		B07P1		1-02 *											357
RD 3 H				1									2-5/8		357
RD 4 H		B02P2		1-01 *							1		3		358
RD 4 H		B07P2		1-02 *											358
RD 4 H				1									3-0/8		358

RUN NAME	A/P	PIN NAME	ORDER PIN	BAY - ORDER	Q	DRAW OPT	RV	RG	Y	X	Z	REMARKS	NC LENGTH FLAG	EXCEPTIONS	RUN NUMBER
RD 5 H		A02H2		1-01 *	P						1		3		359
RD 5 H		A07H2		1-02 *											359
RD 5 H				1									3-0/8		359
RD 6(SB) L		A02F2		1-01 *	P						1		3		360
RD 6(SB) L		A07F2		1-02 *											360
RD 6(SB) L				1									3-0/8		360
RD 7(SB) L		A02E2		1-01 *							1		3		361
RD 7(SB) L		A07E2		1-02 *											361
RD 7(SB) L				1									3-0/8		361
RD ACTV L		D05L2												1=PIN RUN	362
RD ADDR 1(1) H		D01T2		1-01 *							1		1		363
RD ADDR 1(1) H		D02T2		1-02 *	P						2		1		363
RD ADDR 1(1) H		D03T2		1-03 *							1		6-1/8		363
RD ADDR 1(1) H		F04T2		1-04 *											363
RD ADDR 1(1) H				1									8-1/8		363
RD ADDR 2(1) H		C04E2		1-01 *							1		5-3/8		364
RD ADDR 2(1) H		D03U1		1-02 *	P						2		1		364
RD ADDR 2(1) H		D02U1		1-03 *							1		1		364
RD ADDR 2(1) H		D01U1		1-04 *											364
RD ADDR 2(1) H				1									7-3/8		364
RD ADDR 3(1) H		C04K2		1-01 *							1		4-5/8		365
RD ADDR 3(1) H		D03U2		1-02 *	P						2		1		365
RD ADDR 3(1) H		D02U2		1-03 *							1		1		365
RD ADDR 3(1) H		D01U2		1-04 *											365
RD ADDR 3(1) H				1									6-5/8		365
RD P H		A02D2		1-01 *							1		7-1/8		366
RD P H		B07V1		1-02 *											366
RD P H				1									7-1/8		366
RDA 0 H		E01N2		1-01 *							1		3-1/8		367
RDA 0 H		E05N2		1-02 *							2		1-4/8		367
RDA 0 H		E07N2		1-03 *											367
RDA 0 H				1									4-5/8		367
RDA 1 H		E03N2		1-01 *							1		4-1/8		368
RDA 1 H		F07F2		1-02 *	P						2		1-4/8		368
RDA 1 H		F05F2		1-03 *											368
RDA 1 H				1									5-5/8		368
RDA 2 H		E01N1		1-01 *							1		2-5/8		369
RDA 2 H		E05N2		1-02 *	P						2		1-4/8		369
RDA 2 H		E07N2		1-03 *											369
RDA 2 H				1									4-1/8		369
RDA 3 H		E03E2		1-01 *							1		4-3/8		370
RDA 3 H		F05H2		1-02 *	P						2		1-4/8		370
RDA 3 H		F07H2		1-03 *											370
RDA 3 H				1									5-7/8		370

RUN NAME	A/P	PIN NAME	ORDER PIN	BAY - ORDER	Q	DRAW OPT	RV	RG	Y	X	Z	REMARKS	NC LENGTH FLAG	EXCEPTIONS	RUN NUMBER
RDA 4 H		E01E2		1-01 *							1		3-5/8		371
RDA 4 H		E05R2		1-02 *							2		1-4/8		371
RDA 4 H		E07R2		1-03 *											371
RDA 4 H				1									5-1/8		371
RDA 5 H		E02H2		1-01 *							1		2-6/8		372
RDA 5 H		E05T2		1-02 *	P						2		1-4/8		372
RDA 5 H		E07T2		1-03 *											372
RDA 5 H				1									4-2/8		372
RDA 6 H		E02E2		1-01 *							1		2-5/8		373
RDA 6 H		E05U2		1-02 *	P						2		1-4/8		373
RDA 6 H		E07U2		1-03 *											373
RDA 6 H				1									4-1/8		373
RDA 7 H		E03N1		1-01 *							1		3-3/8		374
RDA 7 H		E07E2		1-02 *	P						2		1-4/8		374
RDA 7 H		E05E2		1-03 *											374
RDA 7 H				1									4-7/8		374
RDA P H		E02N1		1-01 *	P						1		2-3/8		375
RDA P H		E05S2		1-02 *	P						2		1-4/8		375
RDA P H		E07S2		1-03 *											375
RDA P H				1									3-7/8		375
RDB 0 L		E01M2		1-01 *							1		2-7/8		376
RDB 0 L		E05E1		1-02 *	P						2		1-2/8		376
RDB 0 L		E06E2		1-03 *											376
RDB 0 L				1									4-1/8		376
RDB 1 L		E03M2		1-01 *	P						1		1-3/8		377
RDB 1 L		E05P1		1-02 *	P						2		1-2/8		377
RDB 1 L		E06P2		1-03 *											377
RDB 1 L				1									2-5/8		377
RDB 2 L		E01H1		1-01 *							1		2-7/8		378
RDB 2 L		E05D1		1-02 *	P						2		1-2/8		378
RDB 2 L		E06D2		1-03 *											378
RDB 2 L				1									4-1/8		378
RDB 3 L		E03J1		1-01 *	P						2		2-1/8		379
RDB 3 L		E05V1		1-02 *	P						2		1		379
RDB 3 L		E06V1		1-03 *											379
RDB 3 L				1									3-1/8		379
RDB 4 L		E01J1		1-01 *							1		2-5/8		380
RDB 4 L		E05F1		1-02 *	P						2		1-2/8		380
RDB 4 L		E06F2		1-03 *											380
RDB 4 L				1									3-7/8		380
RDB 5 L		E02M2		1-01 *	P						1		2-1/8		381
RDB 5 L		E05J1		1-02 *	P						2		1-2/8		381
RDB 5 L		E06J2		1-03 *											381
RDB 5 L				1									3-3/8		381

RUN NAME	A/P	PIN NAME	ORDER PIN	BAY - ORDER	Q	DRAW OPT	RV	RG	Y	X	Z	REMARKS	NC LENGTH FLAG	EXCEPTIONS	RUN NUMBER
RDB 6 L		E02J1		1-01 *	P						1		1-7/8		382
RDB 6 L		E05K1		1-02 *	P						2		1-2/8		382
RDB 6 L		E06K2		1-03 *											382
RDB 6 L				1									3-1/8		382
RDB 7 L		E03H1		1-01 *	P						1		1-7/8		383
RDB 7 L		E05L1		1-02 *							2		1-2/8		383
RDB 7 L		E06L2		1-03 *											383
RDB 7 L				1									3-1/8		383
RDB P L		E02H1		1-01 *	P						1		2		384
RDB P L		E05H1		1-02 *							2		1-2/8		384
RDB P L		E06H2		1-03 *											384
RDB P L				1									3-2/8		384
RDC 0 H		B08H2		1-01 *							1		7-5/8		385
RDC 0 H		D06R1		1-02 *											385
RDC 0 H				1									7-5/8		385
RDC 1 H		B08H1		1-01 *							1		7-3/8		386
RDC 1 H		D06P1		1-02 *											386
RDC 1 H				1									7-3/8		386
RDC 2 H		B08J1		1-01 *							1		7-1/8		387
RDC 2 H		D06N1		1-02 *											387
RDC 2 H				1									7-1/8		387
RDC 3 H		B08J2		1-01 *							1		7-3/8		388
RDC 3 H		D06M1		1-02 *											388
RDC 3 H				1									7-3/8		388
RDC 4 H		D06L1		1-01 *							1		1-4/8		389
RDC 4 H		D08L1		1-02 *											389
RDC 4 H				1									1-4/8		389
RDC 5 H		D06K1		1-01 *							1		1-4/8		390
RDC 5 H		D08K1		1-02 *											390
RDC 5 H				1									1-4/8		390
RDC 6 H		D06J1		1-01 *	P						1		1-4/8		391
RDC 6 H		D08J1		1-02 *											391
RDC 6 H				1									1-4/8		391
RDC 7 H		D06H1		1-01 *							1		1-4/8		392
RDC 7 H		D08H1		1-02 *											392
RDC 7 H				1									1-4/8		392
RDC P H		C06E2		1-01 *							1		1-7/8		393
RDC P H		C08K2		1-02 *											393
RDC P H				1									1-7/8		393
RDS H		D04U1		1-01 *	P						1		2-4/8		394
RDS H		D08U1		1-02 *							1		1-4/8		394
RDS H		D06U1		1-03 *							2		7-5/8		394
RDS H		B01V2		1-04 *											394
RDS H				1									11-5/8		394

RUN NAME	A/P	PIN NAME	ORDER PIN	BAY - ORDER	Q	DRAW OPT	RV	RG	Y	X	Z	REMARKS	NC LENGTH FLAG	EXCEPTIONS	RUN NUMBER
RDS L		B01N1		1-01 *							2		10-5/8		395
RDS L		E04V2		1-02 *	P						1		1		395
RDS L		F05V2		1-03 *	P										395
RDS L				1									11-5/8		395
READING H		D01J2		1-01 *							1		1		396
READING H		D02J2		1-02 *	P						2		1		396
READING H		D03J2		1-03 *							1		1		396
READING H		D04J2		1-04 *	P						2		1		396
READING H		D05J2		1-05 *							1		7-5/8		396
READING H		B01K2		1-06 *							2		8-5/8		396
READING H		D07J2		1-07 *											396
READING H				1									20-2/8		396
READING L		D05K2		1-01 *	P						2		1-4/8		397
READING L		D07K2		1-02 *	P						2		1		397
READING L		D08K2		1-03 *											397
READING L				1									2-4/8		397
REC (SB) L		B01R2		1-01 *							1		3-7/8		398
REC (SB) L		B07K2		1-02 *											398
REC (SB) L				1									3-7/8		398
RECORD ACTIVE H		C01N1		1-01 *							2		1		399
RECORD ACTIVE H		C02N1		1-02 *	P						1		1		399
RECORD ACTIVE H		C03N1		1-03 *	P						2		1		399
RECORD ACTIVE H		C04L1		1-04 *							1		4-5/8		399
RECORD ACTIVE H		D01K1		1-05 *							2		1		399
RECORD ACTIVE H		D02K1		1-06 *							1		1		399
RECORD ACTIVE H		D03K1		1-07 *											399
RECORD ACTIVE H				1									9-5/8		399
RECORD ACTIVE L		C04P1		1-01 *							1		3-3/8		400
RECORD ACTIVE L		D03P2		1-02 *	P						2		1		400
RECORD ACTIVE L		D02P2		1-03 *							1		1		400
RECORD ACTIVE L		D01P2		1-04 *											400
RECORD ACTIVE L				1									5-3/8		400
RECORD H		E07V1		1-01 *	P						1		1-4/8		401
RECORD H		E09V1		1-02 *											401
RECORD H				1									1-4/8		401
REG WRT L		C09M2		1-01 *							1		9-3/8		402
REG WRT L		F06J2		1-02 *											402
REG WRT L				1									9-3/8		402
REV CRC8(1) H		C05V2												1=PIN RUN	403
REV H		A02V2		1-01 *							1		5-1/8		404
REV H		B09S1		1-02 *							2		8-3/8		404
REV H		E05D2		1-03 *											404
REV H				1									13-4/8		404

RUN NAME	A/P	PIN NAME	ORDER PIN	BAY - ORDER	Q	DRAW OPT	RV	RG	Y	X	Z	REMARKS	NC LENGTH FLAG	EXCEPTIONS	RUN NUMBER
REV L		E01F2		1-01 *							2		1		405
REV L		E02F2		1-02 *	P						1		1		405
REV L		E03F2		1-03 *	P						2		1-4/8		405
REV L		E05F2		1-04 *							1		2-4/8		405
REV L		E09F2		1-05 *											405
REV L				1									6-0/8		405
REV LRC8 H		D05E2												1=PIN RUN	406
REV LRC8 L		D05F2												1=PIN RUN	407
RG 0500		D09P2		1-01 *							1		2-7/8		408
RG 0500		E08H1		1-02 *											408
RG 0500				1									2-7/8		408
RG 0501		F09V2		1-01 *	P						1		1-6/8		409
RG 0501		F08L1		1-02 *											409
RG 0501				1									1-6/8		409
RG 0502		F09V1		1-01 *	P						1		1-3/8		410
RG 0502		F08N1		1-02 *											410
RG 0502				1									1-3/8		410
RG 0503		F09U1		1-01 *	P						1		1		411
RG 0503		F08S1		1-02 *											411
RG 0503				1									1-0/8		411
RS 0 H		A09B2		1-01 *							1		5-4/8		412
RS 0 H		B05F1		1-02 *											412
RS 0 H				1									5-4/8		412
RS 1 H		A09U1		1-01 *							1		4-5/8		413
RS 1 H		B05U1		1-02 *											413
RS 1 H				1									4-5/8		413
RS 2 H		A09T2		1-01 *							1		5-2/8		414
RS 2 H		B05V2		1-02 *											414
RS 2 H				1									5-2/8		414
RS 3 H		A09S2		1-01 *							1		4-5/8		415
RS 3 H		B04F1		1-02 *											415
RS 3 H				1									4-5/8		415
RS 4 H		A09V2		1-01 *							1		4-3/8		416
RS 4 H		B04U1		1-02 *											416
RS 4 H				1									4-3/8		416
RS SHLN CNTR L		E04B2		1-01 *	P						1		1		417
RS SHDN CNTR L		E05B2		1-02 *	P						2		1-4/8		417
RS SHDN CNTR L		E07B2		1-03 *											417
RS SHDN CNTR L				1									2-4/8		417
RSDO H		D05N2		1-01 *							1		6-7/8		418
RSDO H		F07S2		1-02 *											418
RSDO H				1									6-7/8		418

RUN NAME	A/P	PIN NAME	ORDER PIN	BAY - ORDER	Q	DRAW OPT	RV	RG	Y	X	Z	REMARKS	NC LENGTH FLAG	EXCEPTIONS	RUN NUMBER
RSDO(SB) L		A02K2		1-01 *							1		2-7/8		419
RSDO(SB) L		A07L1		1-02 *											419
RSDO(SB) L				1									2-7/8		419
RUN H		B04P1		1-01 *	P						1		3-1/8		420
RUN H		B09N1		1-02 *											420
RUN H				1									3-1/8		420
RWND (SB) L		A02P2		1-01 *							1		4-5/8		421
RWND (SB) L		B07D2		1-02 *											421
RWND (SB) L				1									4-5/8		421
RWND L		E07J2		1-01 *	P						1		1-4/8		422
RWND L		E09J2		1-02 *											422
RWND L				1									1-4/8		422
RWS H		B03M2		1-01 *	P						1		2-7/8		423
RWS H		B07R2		1-02 *											423
RWS H				1									2-7/8		423
S CLK L		B04P2		1-01 *							1		7-3/8		424
S CLK L		D08L2		1-02 *											424
S CLK L				1									7-3/8		424
SAC L		A01L2		1-01 *							1		14-5/8		425
SAC L		F05B2		1-02 *							2		8-1/8		425
SAC L		C06H2		1-03 *	P						2		1-7/8		425
SAC L		C09E1		1-04 *											425
SAC L				1									24-5/8		425
SDWN H		A03B2		1-01 *							1		2-7/8		426
SDWN H		A07M2		1-02 *											426
SDWN H				1									2-7/8		426
SDWN L		C09R1		1-01 *							1		7-7/8		427
SDWN L		F07D2		1-02 *											427
SDWN L				1									7-7/8		427
SELALT STATUS L		B06K1		1-01 *							1		10-7/8		428
SELALT STATUS L		F06J1		1-02 *											428
SELALT STATUS L				1									10-7/8		428
SET BF PAR F/F L		D09M2												1=PIN RUN	429
SET CORR SK 1 L		C04T2		1-01 *							1		2-5/8		430
SET CORR SK 1 L		D01F2		1-02 *											430
SET CORR SK 1 L				1									2-5/8		430
SET CORR SK 2 L		C01B2		1-01 *							1		3-1/8		431
SET CORR SK 2 L		C04U2		1-02 *											431
SET CORR SK 2 L				1									3-1/8		431
SET CORR SK 3 L		C04V2		1-01 *							1		2-1/8		432
SET CORR SK 3 L		D02F2		1-02 *											432
SET CORR SK 3 L				1									2-1/8		432

RUN NAME	A/P	PIN NAME	ORDER PIN	BAY - ORDER	Q	DRAW OPT	RV	RG	Y	X	Z	REMARKS	NC LENGTH FLAG	EXCEPTIONS	RUN NUMBER
SET CORR SK 4 L		C02B2		1-01 *	P						1		2-5/8		433
SET CORR SK 4 L		C04R2		1-02 *											433
SET CORR SK 4 L				1									2-5/8		433
SET CORR SK 5 L		C04R1		1-01 *							1		2-3/8		434
SET CORR SK 5 L		D03F2		1-02 *											434
SET CORR SK 5 L				1									2-3/8		434
SET CORR SK 6 L		C03B2		1-01 *	P						1		2-3/8		435
SET CORR SK 6 L		C04U1		1-02 *											435
SET CORR SK 6 L				1									2-3/8		435
SET D PAR(1) H		A08F1		1-01 *							1		14-7/8		436
SET D PAR(1) H		F09P1		1-02 *											436
SET D PAR(1) H				1									14-7/8		436
SET DTE L		D08F1		1-01 *	P						1		1		437
SET DTE L		D09F1		1-02 *											437
SET DTE L				1									1-0/8		437
SET NEF H		E03N2		1-01 *							1		3-7/8		438
SET NEF H		E09U2		1-02 *											438
SET NEF H				1									3-7/8		438
SET OPI L		C07F1		1-01 *							1		6-5/8		439
SET OPI L		E09D2		1-02 *											439
SET OPI L				1									6-5/8		439
SET SCC H		B02K2		1-01 *							1		3-3/8		440
SET SCC H		B07N2		1-02 *											440
SET SCC H				1									3-3/8		440
SET VPAR L		D05H2		1-01 *							1		2-3/8		441
SET VPAR L		D08M2		1-02 *											441
SET VPAR L				1									2-3/8		441
SET VPE H		B02H2		1-01 *							1		12-7/8		442
SET VPE H		F05N1		1-02 *											442
SET VPE H				1									12-7/8		442
SFC H		C09K1		1-01 *							1		6-1/8		443
SFC H		E08K1		1-02 *											443
SFC H				1									6-1/8		443
SHDN 2(1) H		D04N2		1-01 *	P						1		2		444
SHDN 2(1) H		D07N2		1-02 *											444
SHDN 2(1) H				1									2-0/8		444
SHDN 8(1) H		C05V1		1-01 *	P						1		1-4/8		445
SHDN 8(1) H		C07V1		1-02 *											445
SHDN 8(1) H				1									1-4/8		445
SINGLE DD TRK H		D01E1		1-01 *							1		8-7/8		446
SINGLE DD TRK H		F04U2		1-02 *											446
SINGLE DD TRK H				1									8-7/8		446

RUN NAME	A/P	PIN NAME	ORDER PIN	BAY = ORDER	Q	DRAW OPT	RV	RG	Y	X	Z	REMARKS	NC FLAG	LENGTH	EXCEPTIONS	RUN NUMBER
SINGLE DD TRA L		F04M1													1=PIN RUN	447
SLA H		B03E2		1=01 *	P						1			2=5/8		448
SLA H		B07F2		1=02 *												448
SLA H				1										2=5/8		448
SLAVE SET PLS H		A01S2		1=01 *							1			3=2/8		449
SLAVE SET PLS H		A07S1		1=02 *												449
SLAVE SET PLS H				1										3=2/8		449
SLCT=A		C08P1													1=PIN RUN	450
SLCT=B		C08R1													1=PIN RUN	451
SN0(SB) L		A07D1		1=01 *							1			6=7/8		452
SN0(SB) L		B03V1		1=02 *												452
SN0(SB) L				1										6=7/8		452
SN01(SB) L		A07U2		1=01 *							1			4		453
SN01(SB) L		B03S2		1=02 *												453
SN01(SB) L				1										4=0/8		453
SN02(SB) L		B03U2		1=01 *	P						1			2=2/8		454
SN02(SB) L		B07U1		1=02 *												454
SN02(SB) L				1										2=2/8		454
SN03(SB) L		A03K2		1=01 *							1			2=5/8		455
SN03(SB) L		A07L2		1=02 *												455
SN03(SB) L				1										2=5/8		455
SN04(SB) L		A03E2		1=01 *	P						1			2=2/8		456
SN04(SB) L		A07E1		1=02 *												456
SN04(SB) L				1										2=2/8		456
SN05(SB) L		A03E1		1=01 *							1			3=3/8		457
SN05(SB) L		A07N1		1=02 *												457
SN05(SB) L				1										3=3/8		457
SN06(SB) L		B03U1		1=01 *							1			2=7/8		458
SN06(SB) L		B07T2		1=02 *												458
SN06(SB) L				1										2=7/8		458
SN07(SB) L		A03F1		1=01 *							1			3=2/8		459
SN07(SB) L		A07V1		1=02 *												459
SN07(SB) L				1										3=2/8		459
SN08(SB) L		A03F2		1=01 *							1			2=2/8		460
SN08(SB) L		A07F1		1=02 *												460
SN08(SB) L				1										2=2/8		460
SN09(SB) L		B03S1		1=01 *							1			3=6/8		461
SN09(SB) L		B07D1		1=02 *												461
SN09(SB) L				1										3=6/8		461

RUN NAME	A/P	PIN NAME	ORDER PIN	BAY = ORDER	Q	DRAW OPT	RV	RG	Y	X	Z	REMARKS	NC FLAG	LENGTH	EXCEPTIONS	RUN NUMBER
SN10 H		B03R2		1=01 *							1			2=1/8		462
SN10 H		B07S1		1=02 *												462
SN10 H				1										2=1/8		462
SN11(SB) L		A03H1		1=01 *							1			3=4/8		463
SN11(SB) L		B07C1		1=02 *												463
SN11(SB) L				1										3=4/8		463
SN12 H		A03H2		1=01 *	P						1			2=2/8		464
SN12 H		A07H1		1=02 *												464
SN12 H				1										2=2/8		464
SN13(SB) L		A07U1		1=01 *							1			3=7/8		465
SN13(SB) L		B03R1		1=02 *												465
SN13(SB) L				1										3=7/8		465
SN14 H		B03P2		1=01 *							1			2=3/8		466
SN14 H		B07N1		1=02 *												466
SN14 H				1										2=3/8		466
SN15(SB) L		A03K1		1=01 *							1			3=6/8		467
SN15(SB) L		B07F1		1=02 *												467
SN15(SB) L				1										3=6/8		467
SPACE H		D07T2		1=01 *							1			1=4/8		468
SPACE H		D09T2		1=02 *												468
SPACE H				1										1=4/8		468
SPACE L		C07T2		1=01 *							1			5=7/8		469
SPACE L		E04F2		1=02 *							2			4=1/8		469
SPACE L		F05P1		1=03 *												469
SPACE L				1										10=0/8		469
SPR H		B03E1		1=01 *							1			2=6/8		470
SPR H		B07E2		1=02 *												470
SPR H				1										2=6/8		470
SS0(1) H		B01H2		1=01 *							1			13=5/8		471
SS0(1) H		F06K2		1=02 *												471
SS0(1) H				1										13=5/8		471
SS1(SB) L		B01P2		1=01 *							1			5=1/8		472
SS1(SB) L		C06V1		1=02 *												472
SS1(SB) L				1										5=1/8		472
SS2(SB) L		B01M2		1=01 *							1			7=7/8		473
SS2(SB) L		D06K2		1=02 *												473
SS2(SB) L				1										7=7/8		473
SSC L		F07S1		1=01 *	P						1			1=4/8		474
SSC L		F09S1		1=02 *												474
SSC L				1										1=4/8		474
ST CLK		D04P2		1=01 *	P						1			2		475
ST CLK		D07R2		1=02 *												475
ST CLK				1										2=0/8		475

RUN NAME	A/P	PIN NAME	ORDER PIN	BAY - ORDER	Q	DRAW OPT	RV	RG	Y	X	Z	REMARKS	NC LENGTH FLAG	EXCEPTIONS	RUN NUMBER
STOP(0) H		F07R1		1-01 *	P						1		1-4/8		476
STOP(0) H		F09K1		1-02 *											476
STOP(0) H				1									1-4/8		476
STOP(8B) L		A01V2		1-01 *							1		3-4/8		477
STOP(8B) L		A07V2		1-02 *											477
STOP(8B) L				1									3-4/8		477
SYNC CLK 4 L		C02P1		1-01 *							1		9-7/8		478
SYNC CLK 4 L		F04U1		1-02 *											478
SYNC CLK 4 L				1									9-7/8		478
TAPE SPEED CLK H		B01R2		1-01 *							1		14-5/8		479
TAPE SPEED CLK H		F06S1		1-02 *											479
TAPE SPEED CLK H				1									14-5/8		479
TAPE WRT CLK H		B02E2		1-01 *							1		4		480
TAPE WRT CLK H		C07D2		1-02 *											480
TAPE WRT CLK H				1									4-0/8		480
TM 1 (0) H		A07B2		1-01 *							1		3-6/8		481
TM 1 (0) H		A01B1		1-02 *											481
TM 1 (0) H				1									3-6/8		481
TMRK H		C07U1		1-01 *	P						1		1-4/8		482
TMRK H		C09U1		1-02 *											482
TMRK H				1									1-4/8		482
TMRK L		F04C1		1-01 *	P						1		1-5/8		483
TMRK L		F05L1		1-02 *	P						2		1-4/8		483
TMRK L		F07L1		1-03 *											483
TMRK L				1									3-1/8		483
TMWIP H		C04F1		1-01 *	P						1		2-1/8		484
TMWIP H		C07D1		1-02 *											484
TMWIP H				1									2-1/8		484
TRA(1) L		B06L2		1-01 *							1		2-1/8		485
TRA(1) L		B09B1		1-02 *											485
TRA(1) L				1									2-1/8		485
TUR H		A02S2		1-01 *							1		6-6/8		486
TUR H		C09N1		1-02 *											486
TUR H				1									6-6/8		486
US 0		B09J2												1-PIN RUN	487
US 1		B09L1												1-PIN RUN	488
US 2		B09E1												1-PIN RUN	489
W CLK H		B04R1		1-01 *							1		2-4/8		490
W CLK H		B08R1		1-02 *											490
W CLK H				1									2-4/8		490

RUN NAME	A/P	PIN NAME	ORDER PIN	BAY - ORDER	Q	DRAW OPT	RV	RG	Y	X	Z	REMARKS	NC LENGTH FLAG	EXCEPTIONS	RUN NUMBER
WB CLK H		D05A1		1-01 *							1		1-6/8		491
WB CLK H		D07H1		1-02 *											491
WB CLK H				1									1-6/8		491
WD 3 L		B01E1		1-01 *							1		4-3/8		492
WD 3 L		B07L2		1-02 *											492
WD 3 L				1									4-3/8		492
WD 4 L		B01F2		1-01 *							1		3-5/8		493
WD 4 L		B07B1		1-02 *											493
WD 4 L				1									3-5/8		493
WD BFO 0(1) H		D05B1		1-01 *							1		1-6/8		494
WD BFO 0(1) H		D07J1		1-02 *							2		1-3/8		494
WD BFO 0(1) H		D06R2		1-03 *	P						1		1-5/8		494
WD BFO 0(1) H		D08T2		1-04 *											494
WD BFO 0(1) H				1									4-6/8		494
WD BFO 1(1) H		D05J1		1-01 *	P						2		1-3/8		495
WD BFO 1(1) H		D06P2		1-02 *	P						2		0-4/8		495
WD BFO 1(1) H		D07P1		1-03 *	P						2		1-3/8		495
WD BFO 1(1) H		D08R2		1-04 *											495
WD BFO 1(1) H				1									3-2/8		495
WD BFO 2(1) H		D05F1		1-01 *	P						1		1-3/8		496
WD BFO 2(1) H		D07E1		1-02 *							1		1-3/8		496
WD BFO 2(1) H		D06N2		1-03 *	P						2		1-3/8		496
WD BFO 2(1) H		D08P2		1-04 *											496
WD BFO 2(1) H				1									4-1/8		496
WD BFO 3(1) H		D05L1		1-01 *	P						1		1-1/8		497
WD BFO 3(1) H		D06M2		1-02 *	P						2		1-5/8		497
WD BFO 3(1) H		D07V2		1-03 *	P						2		1-3/8		497
WD BFO 3(1) H		D08N2		1-04 *											497
WD BFO 3(1) H				1									4-1/8		497
WD BFO 4(1) H		D06F2		1-01 *	P						1		0-5/8		498
WD BFO 4(1) H		D07K1		1-02 *	P						2		1-3/8		498
WD BFO 4(1) H		D08J2		1-03 *											498
WD BFO 4(1) H				1									2-0/8		498
WD BFO 5(1) H		D05K1		1-01 *	P						1		1-3/8		499
WD BFO 5(1) H		D06E2		1-02 *	P						2		1-2/8		499
WD BFO 5(1) H		D07L1		1-03 *	P						2		1-2/8		499
WD BFO 5(1) H		D08H2		1-04 *											499
WD BFO 5(1) H				1									3-7/8		499
WD BFO 6(1) H		D05B2		1-01 *	P						1		2-3/8		500
WD BFO 6(1) H		D08F2		1-02 *							2		1-5/8		500
WD BFO 6(1) H		D07M1		1-03 *							1		3-5/8		500
WD BFO 6(1) H		E06S2		1-04 *											500
WD BFO 6(1) H				1									7-5/8		500

RUN NAME	A/P	PIN NAME	ORDER PIN	BAY = ORDER	Q	DRAW OPT	RV	HG	Y	X	Z	REMARKS	NC LENGTH FLAG	EXCEPTIONS	RUN NUMBER
WD BFO 7(1) H		D05E1		1=01 *							1		2=2/8		501
WD BFO 7(1) H		D08E2		1=02 *							2		1=5/8		501
WD BFO 7(1) H		D07N1		1=03 *							1		3=5/8		501
WD BFO 7(1) H		E06T2		1=04 *											501
WD BFO 7(1) H				1									7=4/8		501
WD BFO P(1) H		C07P2		1=01 *							1		2=1/8		502
WD BFO P(1) H		D08D1		1=02 *											502
WD BFO P(1) H				1									2=1/8		502
WD WBO 0(1) H		D06D1		1=01 *							1		6=1/8		503
WD WBO 0(1) H		F07E1		1=02 *							2		12=1/8		503
WD WBO 0(1) H		B01V1		1=03 *											503
WD WBO 0(1) H				1									18=2/8		503
WD WBO 1(1) H		D06E1		1=01 *							1		7=1/8		504
WD WBO 1(1) H		F07P1		1=02 *							2		13=3/8		504
WD WBO 1(1) H		B01U1		1=03 *											504
WD WBO 1(1) H				1									20=4/8		504
WD WBO 2(1) H		D06H2		1=01 *							1		5=5/8		505
WD WBO 2(1) H		F07D1		1=02 *							2		12=1/8		505
WD WBO 2(1) H		B01T2		1=03 *											505
WD WBO 2(1) H				1									17=6/8		505
WD WBO 3(1) H		D06J2		1=01 *							1		6=7/8		506
WD WBO 3(1) H		F07R2		1=02 *							2		16=5/8		506
WD WBO 3(1) H		A01R2		1=03 *											506
WD WBO 3(1) H				1									23=4/8		506
WD WBO 4(1) H		F06L2		1=01 *		P					1		1		507
WD WBO 4(1) H		F07F1		1=02 *							2		13=1/8		507
WD WBO 4(1) H		B01L2		1=03 *											507
WD WBO 4(1) H				1									14=1/8		507
WD WBO 5 L		C04J2		1=01 *							1		4=3/8		508
WD WBO 5 L		D07F2		1=02 *											508
WD WBO 5 L				1									4=3/8		508
WD WBO 5(1) H		F06P2		1=01 *		P					2		1=1/8		509
WD WBO 5(1) H		F07K2		1=02 *							2		16=1/8		509
WD WBO 5(1) H		A01N2		1=03 *											509
WD WBO 5(1) H				1									17=2/8		509
WD WBO 6(1) H		F06P1		1=01 *		P					2		1=5/8		510
WD WBO 6(1) H		F07L2		1=02 *							2		16=7/8		510
WD WBO 6(1) H		A01J2		1=03 *											510
WD WBO 6(1) H				1									18=4/8		510
WD WBO 7(1) H		F06R1		1=01 *		P					1		1		511
WD WBO 7(1) H		F07N1		1=02 *							2		17=5/8		511
WD WBO 7(1) H		A01E1		1=03 *											511
WD WBO 7(1) H				1									18=5/8		511

RUN NAME	A/P	PIN NAME	ORDER PIN	BAY = ORDER	Q	DRAW OPT	RV	HG	Y	X	Z	REMARKS	NC LENGTH FLAG	EXCEPTIONS	RUN NUMBER
WD WBO P H		F06D1		1=01 *		P					2		1=3/8		512
WD WBO P H		F07J2		1=02 *							2		17=3/8		512
WD WBO P H		A01B2		1=03 *											512
WD WBO P H				1									18=6/8		512
WDR(0) H		E04E2		1=01 *							1		2		513
WDR(0) H		E07E2		1=02 *											513
WDR(0) H				1									2=0/8		513
WDR(1) H		E04D2		1=01 *							1		2		514
WDR(1) H		E07D2		1=02 *							2		6=1/8		514
WDR(1) H		C05K2		1=03 *											514
WDR(1) H				1									8=1/8		514
WFMK L		A01T2		1=01 *							1		5=7/8		515
WFMK L		C04F2		1=02 *		P					1		2		515
WFMK L		C07F2		1=03 *		P					2		1=4/8		515
WFMK L		C09F2		1=04 *											515
WFMK L				1									9=3/8		515
WRITE END L		A09V1		1=01 *							1		13=5/8		516
WRITE END L		F09T2		1=02 *		P					2		1=4/8		516
WRITE END L		F07T2		1=03 *											516
WRITE END L				1									15=1/8		516
WRITE H		A09R2		1=01 *		P					2		1=4/8		517
WRITE H		A07R2		1=02 *							1		12=3/8		517
WRITE H		E05B1		1=03 *							2		10=5/8		517
WRITE H		B02D2		1=04 *											517
WRITE H				1									24=4/8		517
WRITE IDB L		D04F2		1=01 *		P					1		1=6/8		518
WRITE IDB L		D07F1		1=02 *											518
WRITE IDB L				1									1=6/8		518
WRITE L		A08P1		1=01 *		P					1		1		519
WRITE L		A09P1		1=02 *							1		4=2/8		519
WRITE L		A01P2		1=03 *											519
WRITE L				1									5=2/8		519
WRL H		B03K2		=01 *							1		2=5/8		520
WRL H		B07M2		=02 *							2		1=4/8		520
WRL H		B09M2		1=03 *											520
WRL H				1									4=1/8		520
WRP 0 L		F06N1												1=PIN HUB	521
WRP 1 L		F06N2		1=01 *		P					1		2=1/8		522
WRP 1 L		F07B2		1=02 *											522
WRP 1 L				1									2=1/8		522
WRP 2 L		F06U2		1=01 *							1		2=3/8		523
WRP 2 L		F07C1		1=02 *											523
WRP 2 L				1									2=3/8		523

RUN NAME	A/P	PIN NAME	ORDER PIN	BAY - ORDER	Q	DRAW OPT	RV	RG	Y	X	Z	REMARKS	NC LENGTH FLAG	EXCEPTIONS	RUN NUMBER
WRP 3 L		B04S1		1-01 *							1		12-5/8		524
WRP 3 L		F06V2		1-02 *	P						2		1		524
WRP 3 L		F07V2		1-03 *							1		6-7/8		524
WRP 3 L		D05U2		1-04 *											524
WRP 3 L				1									20-4/8		524
WRP0+WRP4 L		C04N2		1-01 *							2		9-5/8		525
WRP0+WRP4 L		F07M2		1-02 *							1		13-3/8		525
WRP0+WRP4 L		B01S2		1-03 *							2		7-7/8		525
WRP0+WRP4 L		D06S1		1-04 *											525
WRP0+WRP4 L				1									30-7/8		525
WRP4 L		F05B1		1-01 *							1		6-3/8		526
WRP4 L		D06B2		1-02 *											526
WRP4 L				1									6-3/8		526
WRT CLK H		B07A1		1-01 *							1		4-1/8		527
WRT CLK H		C05D1		1-02 *											527
WRT CLK H				1									4-1/8		527
WRT STRB H		D07V1		1-01 *	P						1		1		528
WRT STRB H		D08V1		1-02 *											528
WRT STRB H				1									1-0/8		528
X WD P H		D05C1		1-01 *							2		2-2/8		529
X WD P H		D07R1		1-02 *							1		5-1/8		529
X WD P H		F06E1		1-03 *											529
X WD P H				1									7-3/8		529
X WD 4 H		D05D2		1-01 *						1			1-7/8		530
X WD 4 H		D07P2		1-02 *											530
X WD 4 H				1									1-7/8		530
ZERO FILL(1) H		C08V2		1-01 *						1			4-5/8		531
ZERO FILL(1) H		E06B2		1-02 *											531
ZERO FILL(1) H				1									4-5/8		531

"THIS DRAWING AND SPECIFICATIONS, HEREIN, ARE THE PROPERTY OF DIGITAL EQUIPMENT CORPORATION AND SHALL NOT BE REPRODUCED OR COPIED OR USED IN WHOLE OR IN PART AS THE BASIS FOR THE MANUFACTURE OR SALE OF ITEMS WITHOUT WRITTEN PERMISSION. COPYRIGHT © 1976 DIGITAL EQUIPMENT CORPORATION"

EXTERNAL COMPONENT TABLE

ITEM NO.	DESCRIPTION	FROM	TO	REMARKS
3	1.5K, 1/4 W 5%, 30 AWG	B04J1	C04A2	PULL-UP FOR DC LO
8	820PF, 5% 30AWG	B06T2	B06T1	
9	470PF, 5% 30 AWG	C04V1	C04T1	

WIRE TABLE

ITEM NO.	DESCRIPTION AWG	DESCRIPTION COLOR	FROM	TO	REMARKS
6	24	BLK	A01C2	ITEM 5	CHASSIS GROUND
7	30	GRN	C01A1	C01A2	+5V FOR M8901
7	30	GRN	C02A1	C03A1	+5V FOR M8901
7	30	GRN	C02A1	C01A2	+5V FOR M8901

WIRE TABLE

ITEM NO.	DESCRIPTION AWG	DESCRIPTION COLOR	FROM HARNESS POINT	TO BOARD POINT
2	14	RED	POINT 1	BD 8 - +5V
		ORN	POINT 2	BD 9 - +15V
		BLK	POINT 3	BD 10 - GND
		BLK	POINT 4	BD 7 - GND
		RED	POINT 5	BD 6 - +5V
		BLK	POINT 6	BD 3 - GND
		BLU	POINT 7	BD 4 - -15V
		RED	POINT 8	BD 5 - +5V
		PUR	POINT 9	BD 1 - DC LO
2	14	YEL	POINT 10	BD 2 - AC LO

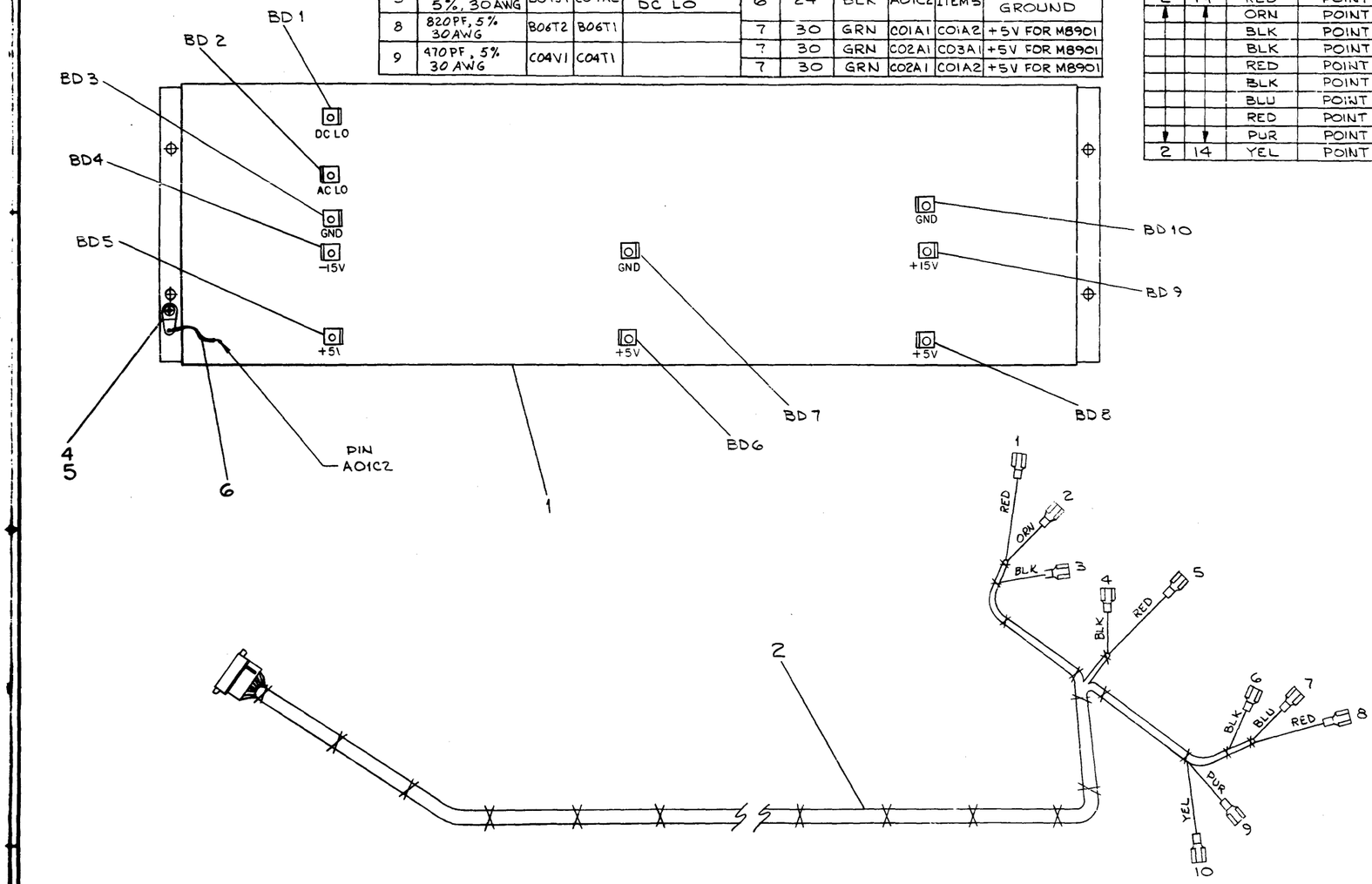

1	470PF 5% 30AWG	7015403	9
1	820PF 5% 30AWG	7015404	8
A/R	WIRE #30 AWG SOLID GRN	9105740-55	7
A/R	WIRE, #24 AWG SOLID BLK	9107688-00	6
1	TERMINAL SOLDER SCR MOUNT	9006766-00	5
1	SCR. PHL. PAN HD #8-32x.25	9006035-1	4
1	1.5KΩ, 1/4W 5%, 30 AWG	7407751	3
1	HARNESS, LOGIC (TMØ3)	D-IA-7013614-0-0	2
1	WIRED ASSY (TMØ3)	D-AD-7013615-0-0	1
	DESCRIPTION	DWG./PART NO.	

UNLESS OTHERWISE SPECIFIED DIMENSIONS ARE IN MILLIMETERS

ANGLES ±0° 30'

SURFACE QUALITY IN MICROINCHES

CLASS OF ACCURACY (CHECK ONE)

	OVER 1 TO 5	OVER 5 TO 30	OVER 30 TO 100	OVER 100 TO 200	OVER 200 TO 400	OVER 400 TO 800
MEDIUM	±0.1	±0.2	±0.3	±0.4	±0.6	±1.0
PREFERRED	±0.3	±0.4	±0.6	±1.0	±1.0	±0.5

QUANTITY & VARIATION

THIRD ANGLE PROJECTION

REMOVE BURRS AND BREAK SHARP CORNERS

DO NOT SCALE DWG

MATERIAL: SEE PARTS LIST

FINISH

DRN. [signature] 7-DEC-76

CHK'D [signature]

ENG.

PROJ. ENG.

PROD. [signature]

NEXT HIGHER ASSY. E-UA-TMØ3-Ø-Ø

SCALE

SHEET 1 OF 1

FIRST USED ON TMØ3

TITLE: HARNESS/ LOGIC ASSY (TMØ3)

SIZE D | CODE AD | NUMBER 7013616-0-0 | REV. A

DIST.

REVISIONS

CHK	CHANGE NO.	REV.
	7013616-00001	

P. RATKUNEN 7-DEC-76

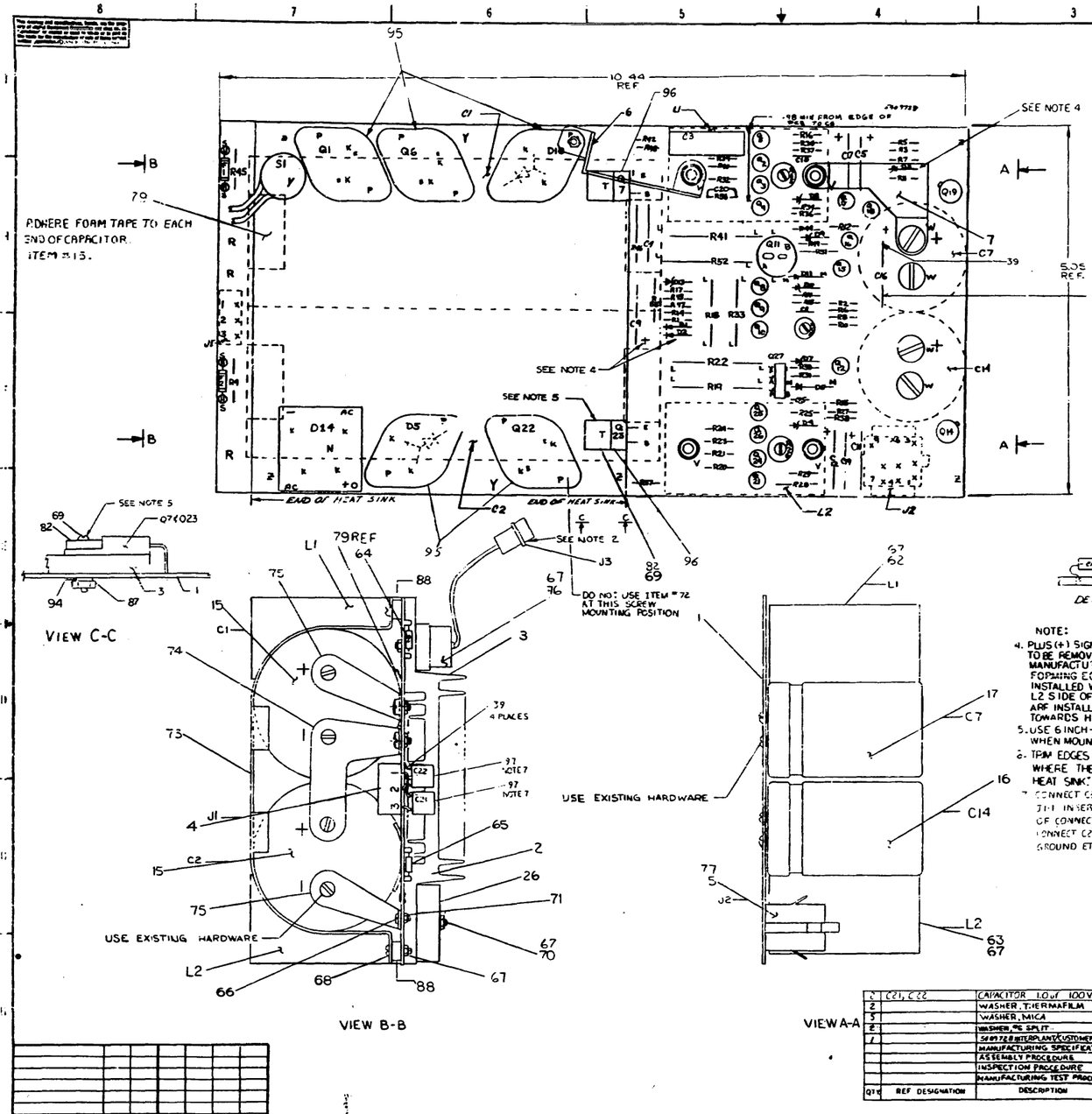

NOTES:

1. APPLY ITEM #8 (THERMAL COMPOUND) BETWEEN [illegible] AND HEATSINK.
2. TRIM LEADS ON ITEM #76 (THERMOSTAT) TO (5) INCHES AND ATTACH ITEM #54 (PINS) AND ITEM #83 (HOUSING) AS SHOWN.
3. APPLY FLAT WASHER ITEM #72 BETWEEN SCR. HD. AND ETCHED BOARD WHEN MOUNTING COMPONENTS Q9,Q6,Q22,D5 & D10.

NOTE:

4. PLUS (+) SIGN ON PC BOARD TO BE REMOVED DURING MODULE MANUFACTURE OR WHEN PERFORMING ECO #22. C69 IS INSTALLED WITH + END TOWARDS L2 SIDE OF BOARD). D1, D2, D3 ARE INSTALLED WITH CATHODES TOWARDS HEAT SINK.
5. USE 6 INCH-POUNDS OF TORQUE WHEN MOUNTING Q7, Q23.
6. TRIM EDGES OF MICA WASHERS WHERE THEY PRESS AGAINST HEAT SINK.
7. CONNECT C21 BETWEEN J1-3 AND J1-1. INSERT LEADS INTO BASE OF CONNECTOR PIN (3 PLACES) CONNECT C22 TO J1-2 AND GROUND ETCH

ITEM	QTY	REF DESIGNATION	DESCRIPTION	PART NO.	ITEM NO.
	1	C21, C22	CAPACITOR .10uf 100V	1015752	97
	2		WASHER, THERMAFILM	9009993-01	96
	3		WASHER, MICA	9009993-00	95
	2		WASHER, #6 SPLIT	9007805	94
	1		5409728 INTERPLANT/CUSTOMER PKG	A-PI-5700047-0-0	93
			MANUFACTURING SPECIFICATION	A-SP-5409728-0-3	92
			ASSEMBLY PROCEDURE	A-SP-5409728-0-3	91
			INSPECTION PROCEDURE	A-SP-5409728-0-0	90
			MANUFACTURING TEST PROCEDURE	A-SP-5409728-0-3	89

ITEM	QTY	REF DESIGNATION	DESCRIPTION	PART NO.	ITEM NO.
	2		SPACER, ALUM #6 1/4 AF A118" LG	9009283	88
	1		NUT 6-32	9004852	87
	1	Q11	XSTR C32AX13S	1510778	86
	1	Q21	XSTR D85	1510705-01	85
	2		PINS MALE CRIMP	1209378-01	84
	1	J3	MATE-N-LOCK CONNECTOR	1209322-02	83
	2		WASHER FECT	9009969	82
	1	D12	DIODE, ZENER, 5.7V, 2%	1111203	81
	1	C12, C19	CAP .22MF 35V 10% AXIAL	1002431	80
	4		1" LG FOAM TAPE	9003087-1	79
	2	R38, R40	RES 5.1 1/4 W 5%	1309422	78
	9		PIN FEMALE	1209456	77
	1	S1	THERMOSTAT SPST	1210824	76
	2		CONTACT, CAPACITOR	C-MD-5309778-0-0	75
	1		CONTACT, COMMON CAPACITOR	C-MD-5309779-0-0	74
	1		HOLDER, CAPACITOR	C-14-5310626-0-0	73
	10		WASHER, #6 INT. TOOTH	9006633	72
	3		NUT KEPS 4-40	206557	71
	1		SCR PHL PAN HD 6-32 x 3/8 LG	9006026-1	70
	2		SCR PHL PAN HD 6-32 x 5/16 LG	9007793-01	69
	12		SCR PH HD 6-32 x 5/16 LG	9006025-1	68
	18		NUT KEPS #6-32 x 5/16	9006105	67
	3		SCR PHL PAN HD 4-40 x 5/16 LG	9006040-3	66
	1	F2	FUSE 1 AMP, PICO	1210478-01	65
	1	F1	FUSE 1 AMP, PICO	1210929	64
	1	L2	CHOKE .22 MH 10A MIN 4445	1811031	63
	1	L1	CHOKE, 20A, 50A PEAK 4289	1810513	62
	1	D27	XSTR MAC 11-3	1510765	61
	1	Q1	XSTR MJ2500	1511282	60
	2	Q7, Q23	XSTR 2N6 HB/B	1510708-1	59
	4	Q2, Q8, Q9, Q14	XSTR KA36	1510706	58
	3	Q3, Q4, Q17, Q18, Q20, Q24	XSTR XA06	1510705	57
	2	Q6, Q22	XSTR 2N5302	1810190	56
	2	Q5, Q19	XSTR 2N5133	1511686	55
	2	Q10, Q13	XSTR C35	1510706-01	54
	1	R9	RES 402, 7W, 5%	1340709-09	53
	1	R36	RES 680, 1/8W, 5%	1301429	52
	1	R22	RES .2 5W 5%	1309884	51
	3	R26, R35, R50	POT 100, 1/2 W 20% 62 PB	1309450-03	50
	1	R52	RES .1 5W 5% WW	1305872	49
	1	R33	RES .39 2W 5% WW	1310763	48
	1	R10	RES 75K 1/2W 1/2 MF	1305322	47
	2	R25, R34	RES 383, 1/8W 1% MF	1306425	46
	6	R2, R5 R6, R11 R12, R3	RES 10K, 1/8W 1% MF	303312	45
	4	R8, R, R7, R14	RES 1K, 1/8W, 1% MF	303114	44
	2	R27 R36	RES 464 1/8 W 1% MF	1303017	43
	1	R31	RES 100, 3% PTC	1310827-1	42
	1	R49	RES 147, 1/8 W, 1% MF	1302874	41
			[illegible]	[illegible]	40
			TFE TUBING 3/8" LG	9 078568	39
	2	R29 R47	RES 68K 1/4W 5%	1301827	38
	5	R20, R21, R28 R39 R54	RES 10 1/4 W 5%	1300317	37
	3	R17, R53, R57	RES 10K 1/4 W 5%	1300479	36
	4	R23, R44, R4, R45	RES 4.7K, 1/2W, 5%	1300498	35
	1	R55	RES 2.7K, 1/2W, 5%	1300485	34
	1	R19	RES .36 5W 5% WW	1313176-02	33
	2	R24 R37	RES 1K, 1/4W 5%	1300345	32
	3	R42, R46, R58	RES 330 1/4 W 5%	1302295	31
	1	R13	RES 400, 2W 5%	1312380	30
	7	R16, R17, R23, R31, R32, R42, R53	RES 100 1/4 W 5%	1300229	29
	1	D7	DIODE MR2958 18V ZENER	1110766	28
	2	D8, D10	DIODE 20 AMP FAST RECOVERY RECT	1110715	27
	1	D14	DIODE, BRIDGE RECTIFIER	1110714	26
	1	D3	DIODE 5.1V ZENER	1110925	25
	2	D6, D11	DIODE IN5624	1110920	24
	2	D1, D2	DIODE IN4004	1106796	23
	2	D4, D5	DIODE IN753A 6.2 V ZENER	1102421	22
	1	D9	DIODE AZ5 2.4 V ZENER	1109938	21
	1	D13	DIODE IN748A 3.9 V ZENER	1100122	20
	1	C18	CAP .1000PF, 1000V, 1KV	1000042	19
	1	C9	CAP 20 MF 50V 5% STANT	1000002-01	18
	1	C7	CAP 6000 MF 10V -10+75% AL EL	1010709	17
	1	C14	CAP 4500 MF 25V -10+75% AL EL	1010703	16
	2	C1, C2	CAP 24000 MF 80V -10% -75%	1010708	15
	1	C16	CAP 200 MF, 25V +75% AL EL	101-2781	14
	1	C3	CAP 1 UF 100V 10%	1011032	13
	2	C8, C5	CAP .22 MF, 63V	1010C79	12
	2	C13, 17	CAP 6.8 MF 35V 10% STANT	1005306	11
	2	C4, C11	CAPACITOR .05 MF, 100V 10% MYLAR	1000050	10
	1	C20	CAP 2200PF, 2.5KV JFR	1000057	9
	AR		THERMAL COMPOUND	9009268	8
	1		#2 THERMAL STRAP	C-MD-5310889-1	7
	1		#1 THERMAL STRAP	C-MD-5310805-1	6
	1	J2	MATE-N-LOCK CONNECTOR	1209350-09	5
	1	J1	MATE-N-LOCK CONNECTOR	1209322-03	4
	1		HEAT SINK	1210596	3
	4		SPLIT LUG	9006733	2
	1		ETCHED BOARD	5409727	1
			MODULE ECO HISTORY	D-MH-5409728-0-0	ALL
			X-Y COORDINATE HOLE LOC.	D-CD-5409728-0-0	REF
			CIRCUIT SCHEMATIC	D-CS-5409728-0-0	REF

ETCH BOARD REV E

REF DESIGNATION	DESCRIPTION	PART NO.

DRAWN	[illegible]	11/05
ENGR	[illegible]	
MFG	[illegible]	
QUAL	[illegible]	
HEAT TRANSFER ASSY.	D-AD-7008731-0-0	

[redacted] EQUIPMENT CORPORATION

TITLE: REGULATOR BOARD

SIZE E | DWG NO. 1A 5409728-0-0 | REV A2

SCALE 2/1 | SHEET 1 OF 1

A5409728-0-0AB

IC PIN LOCATIONS

JUMPER LIST

SOCKET CONNECTOR CONVERSION CHART

This drawing and specifications, herein, are the property of Digital Equipment Corporation and shall not be reproduced or copied or used in whole or in part as the basis for the manufacturing or sale of items without written permission. © 1970, DIGITAL EQUIPMENT CORP.

(THERMOSTAT NORMALLY CLOSED)

J3-1 S1 J3-2

INPUT 28-0-28V AC 47-63HZ

NSS-3514

F1, 15A

+39V

R45 4.7K 1/2W

R55 2.7K 1/2W

J2-4 LTC L OUTPUT

C2 24KUF 50V C1 24KUF 50V

D13 IN748A 3.9V

R33 .39 2W

Q1 MJ2500

R32 100 Q2 855

R34 383 1%

R35 100

R37 1K

D6 IN753A, 6.2V

R36 464 1%

J2-5 +15V OUTPUT

C16 100UF 25V

R38 10K R56 680

C20 2200PF 50V

C18 1000PF

Q3 Q4 XA05

CW

R41 .022 7W, 3%

Q6 2N 5302

R48 10

L1 100UH 20A

D10, 40A FAST RECOVERY

J2-3 +5V OUTPUT

C7 6000 UF, 10V

D11 IN5624

D12 5.7V 2%

R54 10

R39 5.1 R40 5.1

Q5 855

R42 100

Q7 D45H8 Q8

C4 .033UF

R32 .1 5W

C3 1uF

Q11 C32AX135

R53 100

C8 .22UF

Q9 R43 10K

R46 4.7K 1/2W

R47 68K

R49 14.7 1%

C5 6.8UF 35V 10%

R50 100

D9 2.4V A25

Q10 XA05

R16 330

C17 6.8UF 35V 10%

R44 330

R51 100 3% P.T.C.

D2 IN4004 R14 1K 1%

D1 IN4004 R1 1K 1%

-26V

C9 20UF 5% +

R3 10K 1% R5 10K 1% R6 10K 1%

-8.3V Q17 A05

Q18 A05 -11.4V

R8 1K 1%

J2-6 BUS DC LO L OUTPUT

Q19

R10 7.5K 1%

R11 10K 1%

J2-8 PWR OK L

J2-7 PWR CK ENABLE OUTPUT

J2-1 BUS AC LO L

-10V

Q15 A05 Q16 A05

D3 5.1V

R18 100 2W R17 100

Q12 GPS A03

Q14

R18 10K 1%

R15 100

R7 1K 1%

R4 4.7K 1/2W

F2, 10A

-39V

C19 2.2UF 35V 10%

R58 330

R29 1K

R28 4.7K 1/2W

R27 464 1%

J2-2 GROUND OUTPUT

R31 100

C15 .22UF

D4, 6.2V IN 753A

Q26

CW

R26 100 1/2W

D5, 20A FAST RECOVERY

C14 30000UF 25V

Q27 MAC11-3

R57 10K

C12 .22UF 35V

XA05 Q25

R24 68K

R25 383 1%

R30 10

C11 .033UF 100V

Q21 B05

R22 .2 5W

Q24 XA05

R23 100

R21 10

Q23 D45H8

R20 10

R19 .06 5W 3%WW

Q22 2N 5302

L2 100UH 10A

D6 IN5624

D7, 18V IN5248B

J2-9 -15V OUTPUT

UNLESS OTHERWISE INDICATED:
1% RESISTORS ARE 1/8W
VOLTAGES ARE TAKEN AT NO LOAD WITH 115 VAC LINE
VOLTAGES ARE ± 10% TAKEN BY A ≥ 10K/V METER
TRANSISTORS = XA55

QTY	REF DESIGNATION	DESCRIPTION	PART NO.	ITEM NO.

PARTS LIST

ETCH BOARD REV E

REV	REVISIONS	CHK	CHGE NO.	DATE
E	ADD R58, R59, C19, C20, C21, C22	CHK	5409728-00025	29 JUN 77
D	ADD R57, C18	CHK	5409728-00026	28 JAN 77
C	ADD C17, R16, R44, R50, R51, D9, Q10	CHK	5409728-00027	27 JAN 77
B	ADD R45, R55, C2, C1, D13, F1, F2, R4	CHK	5409728-00028	15 MAR 77
A	ADD R33, R32, R34, R35, R37, R36, R38, R56, C20, C18, Q1, Q2, Q3, Q4, D6, C16, J2-5	CHK	5409728-00029	7-28

DEC NO.	EIA NO.	DEC NO.	EIA NO.

SEMICONDUCTOR CONVERSION CHART

DRN. A. Bahan 8-7-78
CHK'D. Anthony Moore 8-7-78
ENG. A. Bahan 8-7-78
PROJ. ENG. Paul Rios 15-MAR-78
PROD. ENG. Hallawn
REVISED: 8-7-78 E-00026 AA
APPROVED: A. Bahan 8-29-77

NEXT HIGHER ASSY

SCALE

SHEET 1 OF 1

digital EQUIPMENT CORPORATION MAYNARD, MASSACHUSETTS

TITLE REGULATOR BOARD FOR H780

SIZE D CODE DCS NUMBER 5409728-0-1 REV. AB

DIST

5409728-0-1 AB

"THIS DRAWING AND SPECIFICATIONS, HEREIN, ARE THE PROPERTY OF DIGITAL EQUIPMENT CORPORATION AND SHALL NOT BE REPRODUCED OR COPIED OR USED IN WHOLE OR IN PART AS THE BASIS FOR THE MANUFACTURE OR SALE OF ITEMS WITHOUT WRITTEN PERMISSION.
COPYRIGHT © 1978 DIGITAL EQUIPMENT CORPORATION"

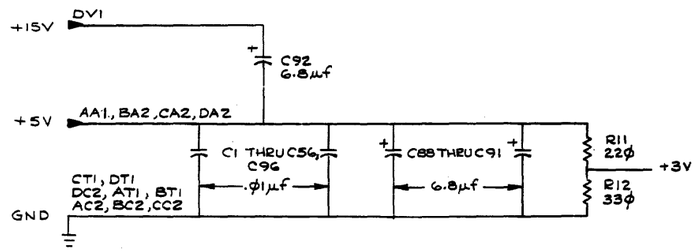

DRN			FIRST USED ON: TU77
CHK'D		3-15-78	TITLE: DATA SYNC (DSI)
ENG			
PROJ. ENG.			
PROG.			
NEXT HIGHER ASSY.			
SCALE			SIZE: D · CODE: CS · NUMBER: M8901-YD-1 · REV: J
SHEET 1 OF 7			DIST.

digital

"THIS DRAWING AND SPECIFICATIONS, HEREIN, ARE THE PROPERTY OF DIGITAL EQUIPMENT CORPORATION AND SHALL NOT BE REPRODUCED OR COPIED OR USED IN WHOLE OR IN PART AS THE BASIS FOR THE MANUFACTURE OR SALE OF ITEMS WITHOUT WRITTEN PERMISSION.
COPYRIGHT © 1974, DIGITAL EQUIPMENT CORPORATION"

BIT STROBE AND WINDOW

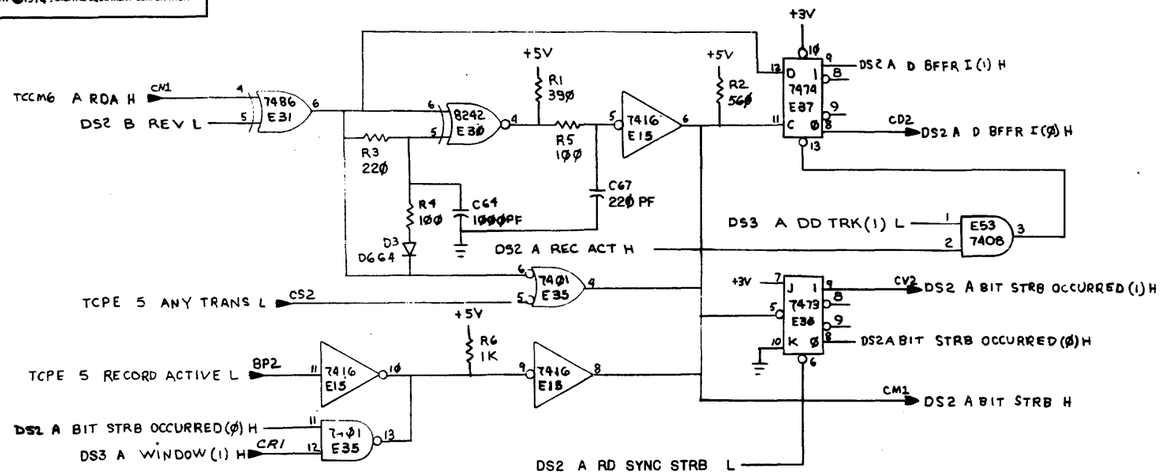

	SLOT 1	SLOT 2	SLOT 3
X	SINGLE DD TRK H		INC COND H
Y(1) H	CER 1 (H)		INC DATA(1) H

USE X, Y, CHART TO DETERMINE INPUTS & OUTPUTS OF 74175 FLOP.

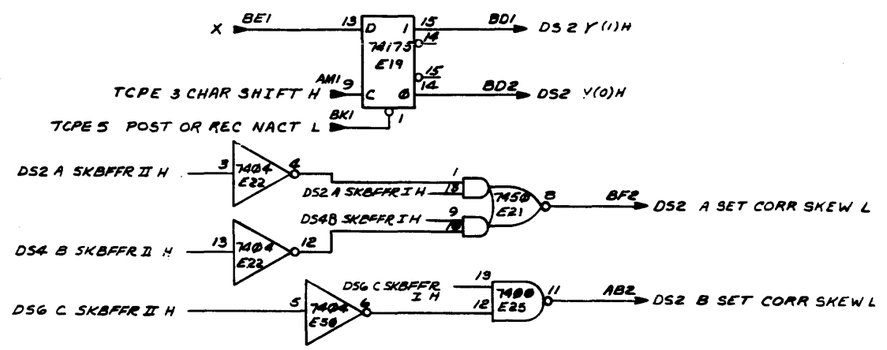

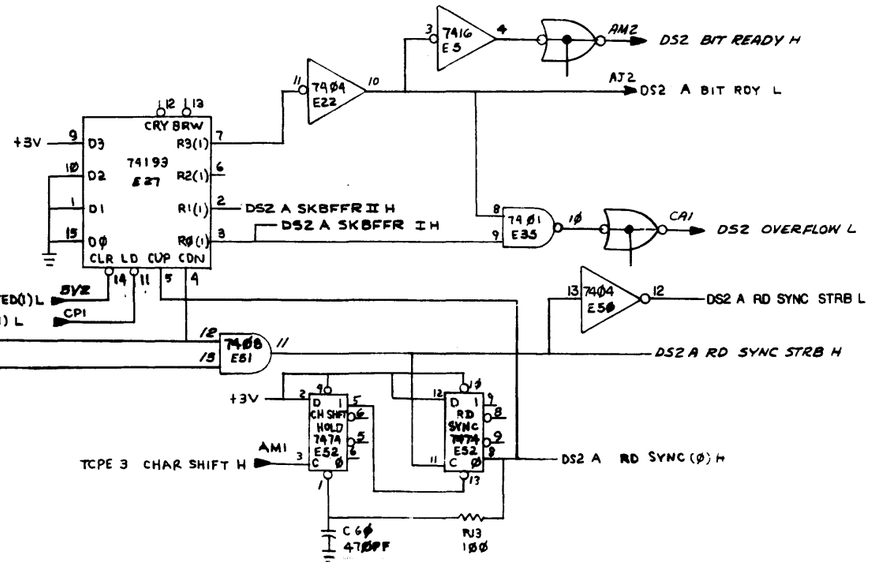

NOTE
1. PREFIX "A" IS TO BE INTERPRETED AS FOLLOWS:
   MODULE IN SLOT 1 A IS BIT 2
   MODULE IN SLOT 2 A IS BIT P
   MODULE IN SLOT 3 A IS BIT 7
   EXAMPLE:
   A RDA H — CO1 N1 = RDA 2 H
   A RDA H — CO2 N1 = RDA P H
   A RDA H — CO3 N1 = RDA 7 H
2. M8901 MODULES ARE LOCATED IN SECTIONS C D E F OF TM08 LOGIC. THEREFORE PINS IN SECTION A OF THE MODULE ARE LOCATED IN C ON THE BACKPLANE ETC.
3. PIN BK1 IS "TCPE 5 POST OR REC NACT L" ON ALL M8901'S WHEN IN TM02.

REVISIONS		
CHK	CHANGE NO.	REV.

TITLE: DATA SYNC (DS2)
SIZE: D | CODE: CS | NUMBER: M8901-YD-1 | REV: J
SCALE: SHEET 2 OF 7 | DIST.

"THIS DRAWING AND SPECIFICATIONS, HEREIN, ARE THE PROPERTY OF DIGITAL EQUIPMENT CORPORATION AND SHALL NOT BE REPRODUCED OR COPIED OR USED IN WHOLE OR IN PART AS THE BASIS FOR THE MANUFACTURE OR SALE OF ITEMS WITHOUT WRITTEN PERMISSION.
COPYRIGHT © 1974, DIGITAL EQUIPMENT CORPORATION"

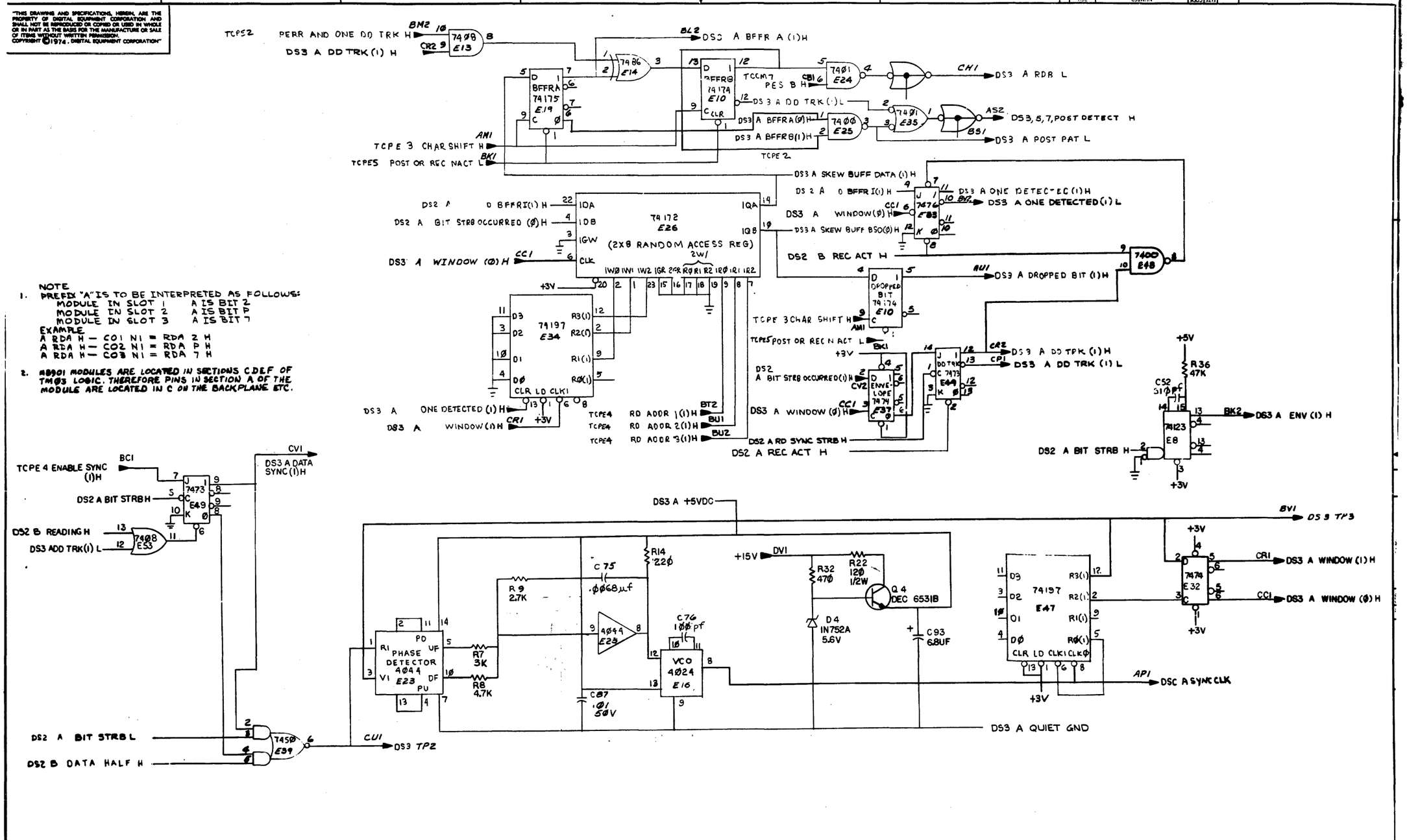

NOTE
1. PREFIX "A" IS TO BE INTERPRETED AS FOLLOWS:
   MODULE IN SLOT 1 A IS BIT 2
   MODULE IN SLOT 2 A IS BIT P
   MODULE IN SLOT 3 A IS BIT 7
   EXAMPLE
   A RDA H — CO1 N1 = RDA 2 H
   A RDA H — CO2 N1 = RDA P H
   A RDA H — CO3 N1 = RDA 7 H
2. M8901 MODULES ARE LOCATED IN SECTIONS C DEF OF TMØ3 LOGIC. THEREFORE PINS IN SECTION A OF THE MODULE ARE LOCATED IN C ON THE BACKPLANE ETC.

REVISIONS		
CHK	CHANGE NO.	REV.

TITLE	SIZE	CODE	NUMBER	REV.
DATA SYNC (DS3)	D	CS	M89Ø1-YD-1	J
SCALE	SHEET 3 OF 7	DIST.		

"THIS DRAWING AND SPECIFICATIONS, HEREIN, ARE THE PROPERTY OF DIGITAL EQUIPMENT CORPORATION AND SHALL NOT BE REPRODUCED OR COPIED OR USED IN WHOLE OR IN PART AS THE BASIS FOR THE MANUFACTURE OR SALE OF ITEMS WITHOUT WRITTEN PERMISSION.
COPYRIGHT © 1974, DIGITAL EQUIPMENT CORPORATION"

BIT STROBE AND WINDOW

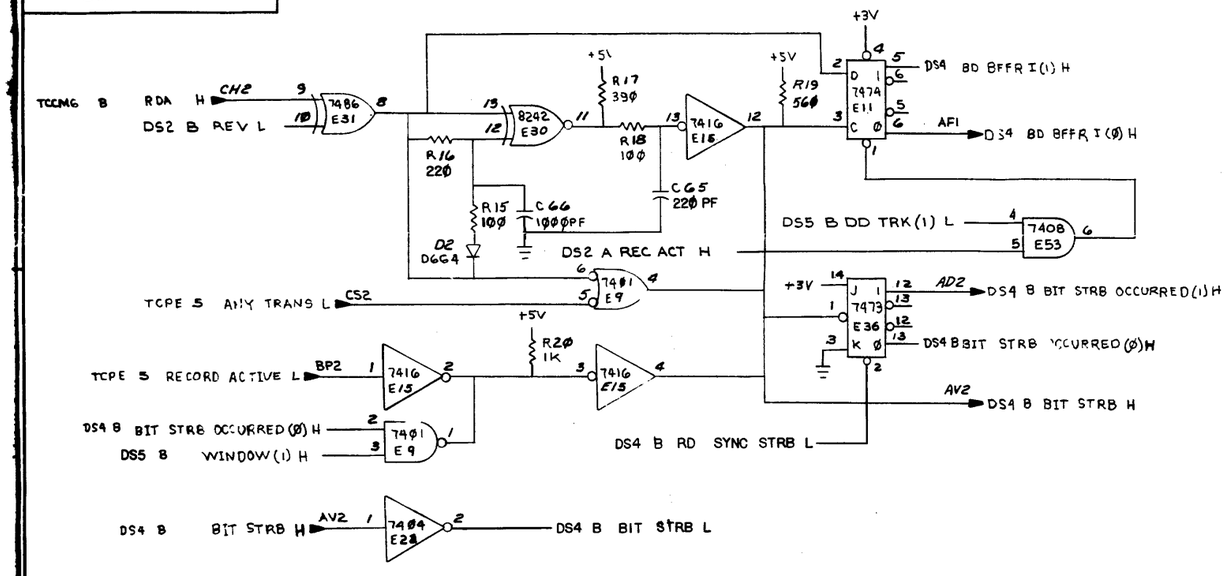

NOTE:
JUMPERS W1 THRU W6 INDICATES THE TAPE SPEED THE MODULE IS BUILT FOR. CHANGING THE JUMPERS DOES NOT CHANGE THE SPEED CAPABILITY OF THE MODULE.

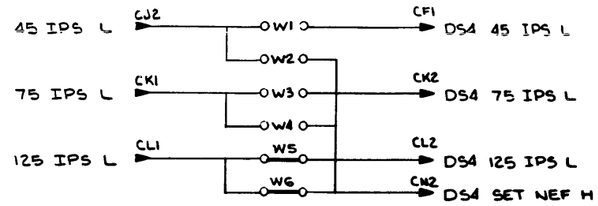

NOTE
1. PREFIX "B" IS TO BE INTERPRETED AS FOLLOWS:
   MODULE IN SLOT 1 B IS BIT Ø
   MODULE IN SLOT 2 B IS BIT 5
   MODULE IN SLOT 3 B IS BIT 1
   EXAMPLE:
   B RDA H — CO1 CH2 = RDA Ø H
   B RDA H — CO2 CH2 = RDA 5 H
   B RDA H — CO3 CH2 = RDA 1 H

2. M8901 MODULES ARE LOCATED IN SECTIONS CDEF OF TM03 LOGIC. THEREFORE PINS IN SECTION A OF THIS MODULE ARE LOCATED IN C ON THE BACKPLANE ETC.

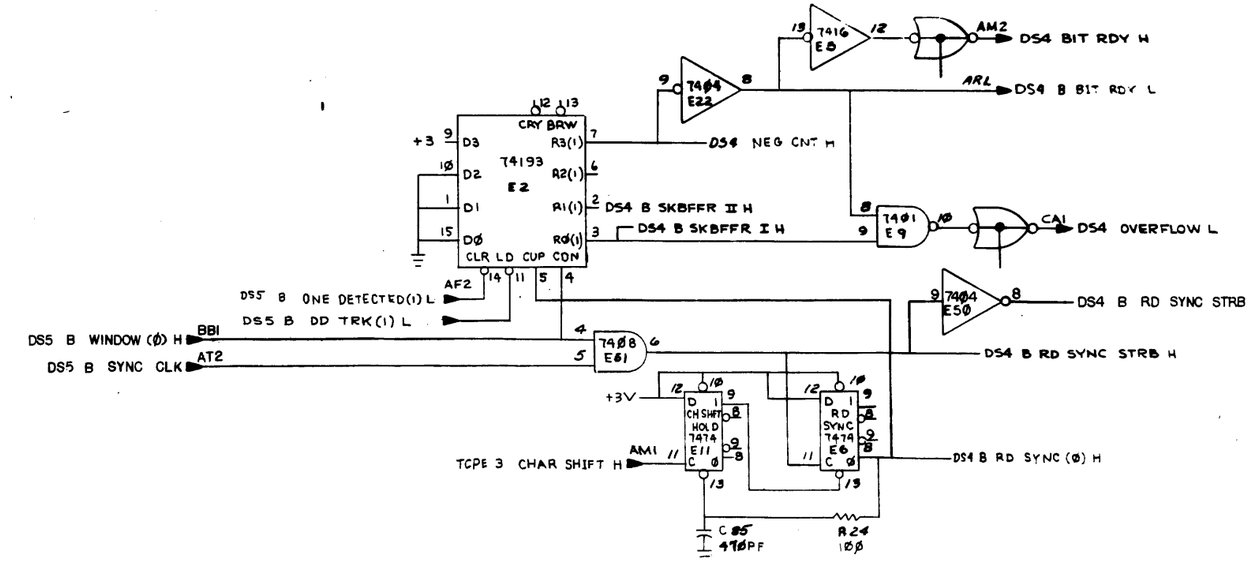

REVISIONS		
CHK	CHANGE NO.	REV.

TITLE	SIZE	CODE	NUMBER	REV.
DATA SYNC (DS4)	D	CS	M8901-YD-1	J
SCALE	SHEET 4 OF 7	DIST.		

"THIS DRAWING AND SPECIFICATIONS, HEREIN, ARE THE PROPERTY OF DIGITAL EQUIPMENT CORPORATION AND SHALL NOT BE REPRODUCED OR COPIED OR USED IN WHOLE OR IN PART AS THE BASIS FOR THE MANUFACTURE OR SALE OF ITEMS WITHOUT WRITTEN PERMISSION.
COPYRIGHT © 1979, DIGITAL EQUIPMENT CORPORATION"

NOTE
PREFIX "B" IS TO BE INTERPRETED AS FOLLOWS:
MODULE IN SLOT 1 B IS BIT Ø
MODULE IN SLOT 2 B IS BIT 5
MODULE IN SLOT 3 B IS BIT 1
EXAMPLE:
B RDA H — CO1 CH2 = RDA Ø H
B RDA H — CO2 CH2 = RDA 5 H
B RDA H — CO3 CH2 = RDA 1 H

TCPE 2 PER AND ONE DD TRK H
DS5 B DO TRK (1) H
DS5 B BFFR A (1) H
BFFR B (1) H
TCCM7 PES B H
DS5 B DD TRK (1) L
DS5 B BFFR A (Ø) H
DS5 B BFFR B (1) H
CM2 DS5 B RDB L
AS2 DS 3,5,7 POST DETECT H
BR1 DS5 B POST PAT L
TCPE 3 CHAR SHIFT H
TCPE 5 POST OR REC NACT L
DS5 B SKEW BUFF DATA (1) H
DS4 B D BFFR (1) H
DS5 B ONE DETECTED (1) H
AF2 DS5 B ONE DETECTED (1) L
DS4 B D BFFRI (1) H
DS4 B BIT STB OCCURRED (Ø) H
DS5 B WINDOW (Ø) H
DS5 B SKEW BUFF BSO (Ø) H
DS2 B REC ACT H
AE1 DS5B DROPPED BIT (1) H
TCPE 3 CHAR SHIFT H
TCPE5 POST OR REC N ACT L
DS4 B BIT STB OCCURRED (1) H
BE2 DS5 B DD TRK (1) H
AV DS5 B DD TRK (1) L
DS5 B WINDOW (Ø) H
DS4 BRD SYNC STRB H
TCPE 5 RECORD ACTIVE H
DS5 B ONE DETECTED (1) H
DS5 B WINDOW (1) H
TCPE4 RD ADDR 1 (1) H
TCPE4 RD ADDR 2 (1) H
TCPE4 RD ADDR 3 (1) H
DS4 B BIT STRB H
AH2 DS5 B ENV (1) H
DS5 B DATA SYNCH (1) H
TCPE 4 ENABLE SYNC (1) H
DS4 B BIT STRB H
DS2 B READING H
DS4 B BIT STRB L
DS2 B DATA HALF H
DS5 B +5VDC
DS5 B QUIET GND
AC1 TP
DS5 B WINDOW (1) H
DS5 B WINDOW (Ø) H
AT2 DS5 B SYNC CLK

REVISIONS		
CHR	CHANGE NO	REV.

TITLE	SIZE	CODE	NUMBER	REV.
DATA SYNC (DS5)	D	CS	M8901-YD-1	J
SCALE	SHEET 5 OF 7	DIST.		

"THIS DRAWING AND SPECIFICATIONS, HEREIN, ARE THE PROPERTY OF DIGITAL EQUIPMENT CORPORATION AND SHALL NOT BE REPRODUCED OR COPIED OR USED IN WHOLE OR IN PART AS THE BASIS FOR THE MANUFACTURE OR SALE OF ITEMS WITHOUT WRITTEN PERMISSION.
COPYRIGHT ©1973 DIGITAL EQUIPMENT CORPORATION"

BIT STROBE AND WINDOW

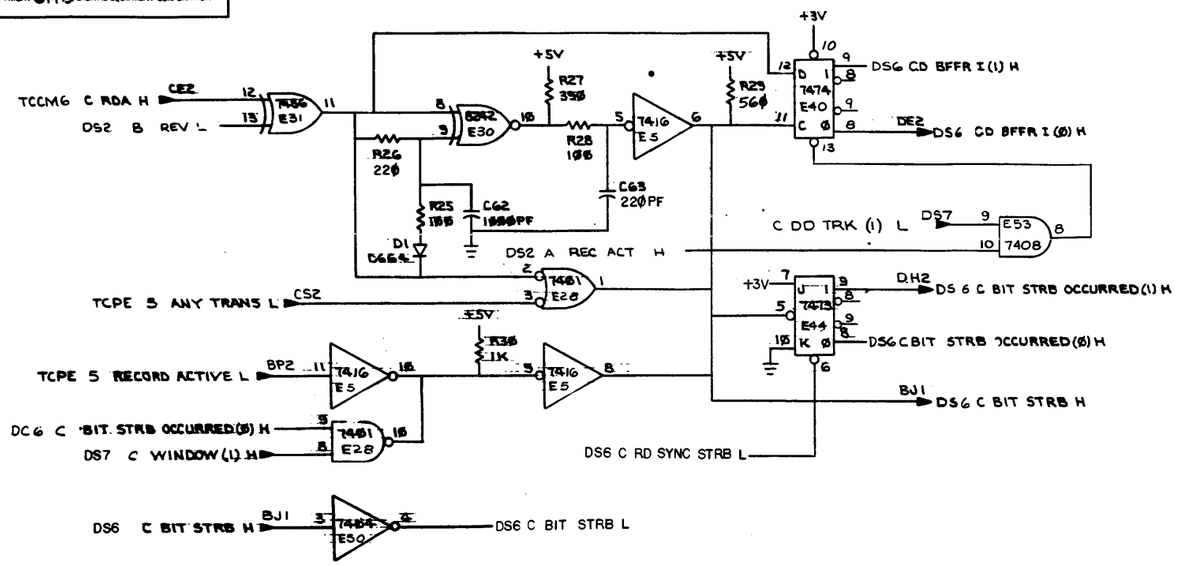

NOTE
PREFIX "C" IS TO BE INTERPRETED AS FOLLOWS:
MODULE IN SLOT 1 C IS BIT 4
MODULE IN SLOT 2 C IS BIT 6
MODULE IN SLOT 3 C IS BIT 3
EXAMPLE:
C RDA H — CØ1 E2 = RDA 4 H
C RDA H — CØ2 E2 = RDA 6 H
C RDA H — CØ3 E2 = RDA 3 H

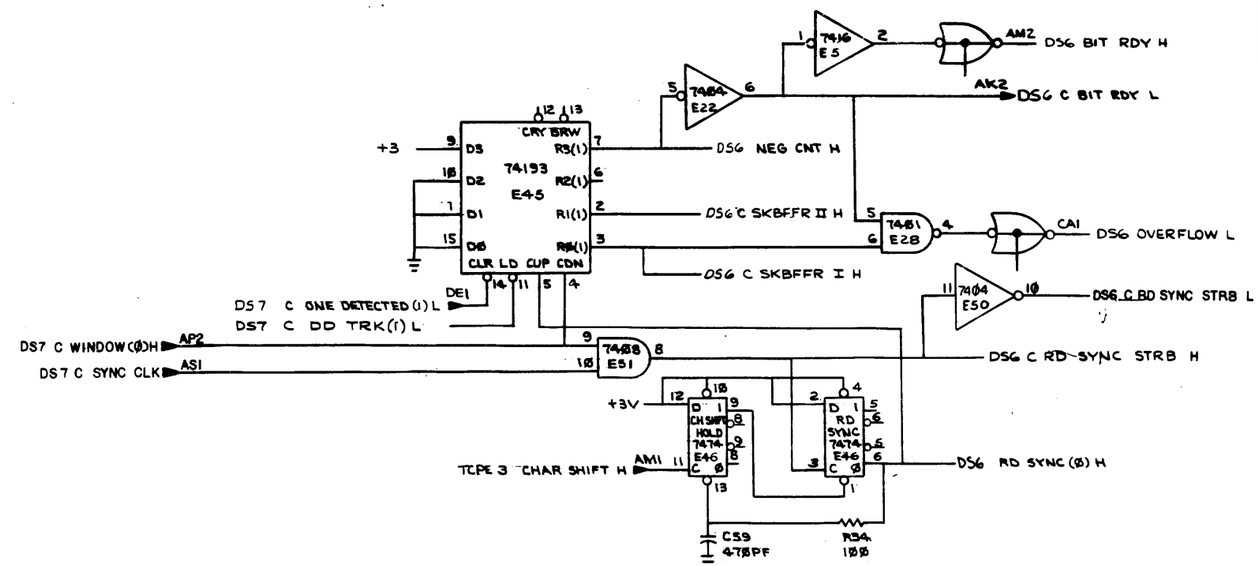

REVISIONS		
CHK	CHANGE NO.	REV.

TITLE	SIZE	CODE	NUMBER	REV.
DATA SYNC (DS6)	D	CS	M8001-YD-1	J
SCALE	SHEET 6 OF 7	DIST.		

"THIS DRAWING AND SPECIFICATIONS, HEREIN, ARE THE PROPERTY OF DIGITAL EQUIPMENT CORPORATION AND SHALL NOT BE REPRODUCED OR COPIED OR USED IN WHOLE OR IN PART AS THE BASIS FOR THE MANUFACTURE OR SALE OF ITEMS WITHOUT WRITTEN PERMISSION. COPYRIGHT © 1973 DIGITAL EQUIPMENT CORPORATION"

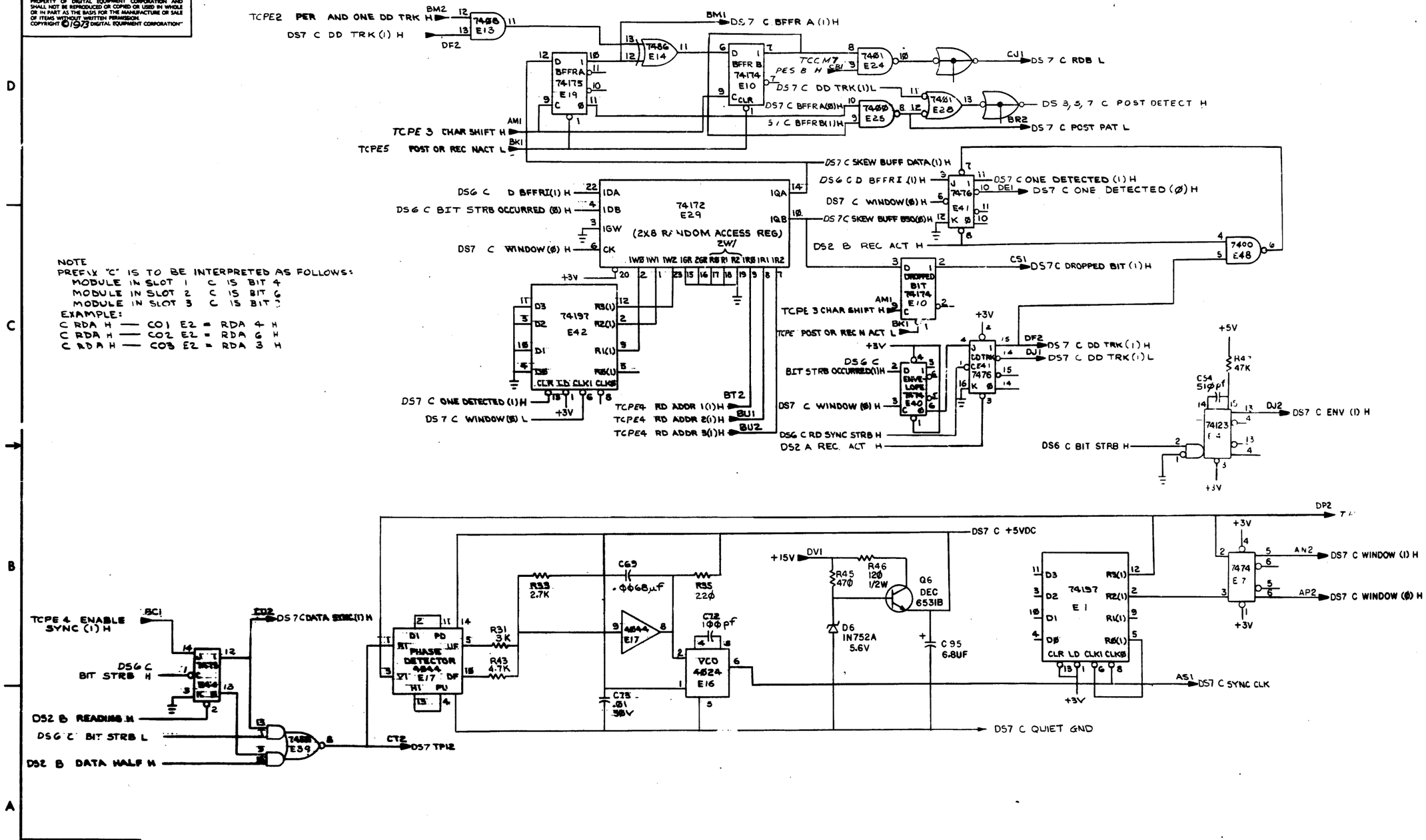

NOTE
PREFIX "C" IS TO BE INTERPRETED AS FOLLOWS:
MODULE IN SLOT 1 C IS BIT 4
MODULE IN SLOT 2 C IS BIT 6
MODULE IN SLOT 3 C IS BIT 3
EXAMPLE:
C RDA H — CO1 E2 = RDA 4 H
C RDA H — CO2 E2 = RDA 6 H
C RDA H — CO3 E2 = RDA 3 H

REVISIONS		
CHK	CHANGE NO.	REV.

TITLE	SIZE	CODE	NUMBER	REV.
DATA SYNC (DS 7)	D	CS	M8901-YD-1	J
SCALE	SHEET 7 OF 7	DIST.		

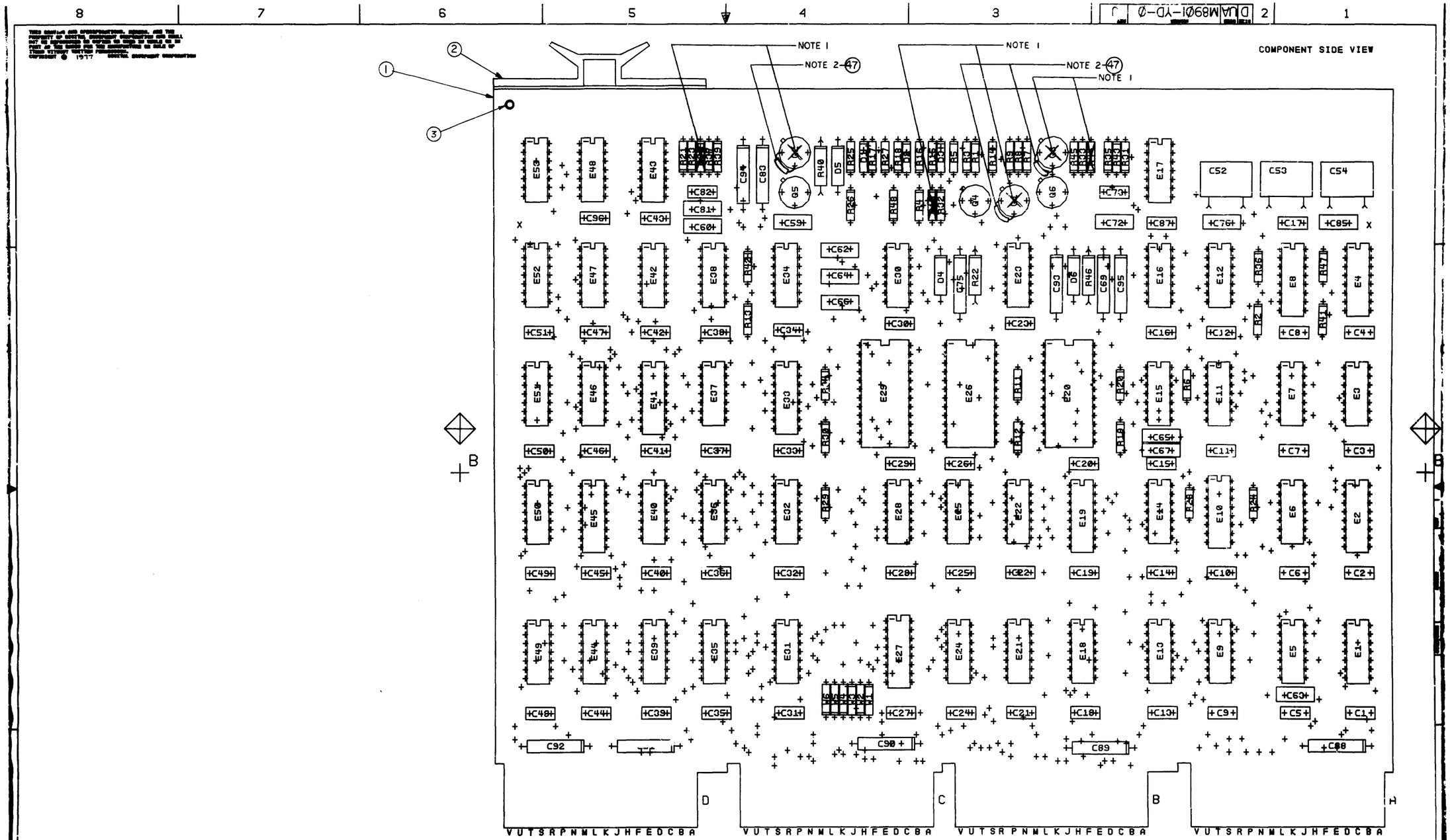

NOTES:
1. DELETE Q1, Q2, Q3, R13, R38, R44.
2. ADD WIRE AS SHOWN Q1, Q2, Q3

CHK	CHANGE NO	REV

ETCH REV. EP2
P.C. DESIGN DATA BASE REV. EP2

SIGNATURES		DATE
DRN.	L. METZGER	2-28-78
CHK'D	[illegible]	3-8-78
ENG.	[illegible]	[illegible]
PROJ. ENG.	[illegible]	[illegible]
PROD.	[illegible]	[illegible]
SCALE 2/1		
SHT. 1 OF 1		
NEXT HIGHER ASSY. B-DD-M8901-YD		

digital

TITLE DATA SYNC

SIZE	CODE	NUMBER	REV
D	UA	M8901-YD-0	J

MS# 160405

LINE	ITEM	DOCUMENT NO.	PART NO.	DESCRIPTION	QTY	REFERENCE DESIGNATORS
1	1		5010467-00	M8901 C	1	
2	2		9008337-06	HANDLE, FLIP CHIP, MAGENTA	4	
3	3		9006732-00	EYELET, ROLLED FLANGE, .121 OD X .219 LG	8	
4	4		1000021-00	220.0 MMF 100V 5%200PPM DM15S (10-00	3	C63,C65,C67
5	5		1509338-00	DEC6531B NPN 310MW SI 40 90 P	3	Q4-Q6
6	6		1000024-00	470.0 MMF 100V 5%200PPM DM15S (10-00	3	C59,C60,C85
7	7		1000042-00	1000.0 MMF 100V 5%200PPM DM15S (10-00	3	C62,C64,C66
8	8		1000060-00	6800.0 MMF 200V 10% 192P MYLR $	3	C69,C75,C83
9	9		1001610-00	.01 MFD 50V Z5U 309CER/8000PF MIN	55	C1-C51,C73,C82,C87,C96
10	10		1005306-00	6.8MFD 35V 10% 150D S.TA (10-00	8	C88-C95
11	11		1002476-00	510.0 MMF 100V 5%200PPM DM15S (10-00	3	C52-C54
12	12		1000016-00	100.0 MMF 100V 5%200PPM DM15S (10-00	3	C72,C76,C81
13	13		1100114-00	D 664 QS\75PCB PIV= 25V SP	3	D1-D3
14	14		1102808-00	1N 752A VZ= 5.6 5% .40W P	3	D4-D6
15	15		1300229-00	100 1/4W 5% CC (13-00	9	R4,R5,R13,R15,R18,R24,R25,R28,
					CONT	R34
16	16		1300271-00	220 1/4W 5% CC (13-00	7	R3,R11,R14,R16,R26,R35,R42
17	17		1300295-00	330 1/4W 5% CC (13-00	1	R12
18	18		1300309-00	390 1/4W 5% CC (13-00	3	R1,R17,R27
19	19		1300316-00	470 1/4W 5% CC (13-00	3	R32,R39,R45
20	20		1300365-00	1 K 1/4W 5% CC (13-00	4	R6,R20,R30,R48
21	21		1300426-00	2.7 K 1/4W 5% CC (13-00	3	R9,R23,R33
22	22		1302177-00	47 K 1/4W 5% CC (13-00	3	R36,R41,R47
23	23		1300243-00	120 1/2W 5% CC (13-00	3	R22,R40,R46
24	24		1300432-00	3 K 1/4W 5% CC (13-00	3	R7,R21,R31
25	25		1300447-00	4.7 K 1/4W 5% CC (13-00	3	R8,R37,R43
26	26		1905547-00	DEC 7474 FF-D DUAL,EDGE TRIGGER,15MHZ	8	E6,E7,E11,E32,E37,E40,E46,E52
27	27		1905575-00	7400 NAND GATE-QUAD 2IN	2	E25,E48
28	28		1905580-00	DEC 7450 A-O-I XPNDBLE GATE-DUAL 2X2	2	E21,E39
29	29		1905585-00	7476 FF-JK DUAL,MASTER SLAVE,15MHZ	2	E33,E41

REVISION HISTORY			VARIATIONS FOR THIS ASSY.
CHK	ECO NO	REV	
---	INIT	J	YD

FIRST USED ON: TM03-CN/FN

MADE BY:	P.BOSSMAN	DATE: 27-MAR-78
CHECKED:	P.RAIKUNEN	DATE: 27-MAR-78
DSN.ENG.:	P.RAIKUNEN	DATE: 27-MAR-78
PROD.:	P.RAIKUNEN	DATE: 27-MAR-78
RESP.ENG.:	P.RAIKUNEN	DATE: 27-MAR-78

DIGITAL EQUIPMENT CORPORATION
MAYNARD, MASSACHUSETTS

TITLE
PARTS LIST

DATA SYNC

SIZE	CODE	DOCUMENT NUMBER	REV
K	PL	M8901-YD-DBP	J

EDIT# 6

ASSY.NO.: D-UA-M8901-YD-0

*THIS DRAWING AND SPECIFICATIONS HEREIN, ARE THE PROPERTY OF DIGITAL EQUIPMENT CORPORATION AND SHALL NOT BE REPRODUCED OR COPIED OR USED IN WHOLE OR IN PART AS THE BASIS FOR THE MANUFACTURE OR SALE OF ITEMS WITHOUT WRITTEN PERMISSION.
COPYRIGHT 1978. DIGITAL EQUIPMENT CORPORATION *

LINE	ITEM	DOCUMENT NO.	PART NO.	DESCRIPTION	QTY	REFERENCE DESIGNATORS
30	30		1905587-00	DEC 7473 FF-JK DUAL,MASTER SLAVE,10MHZ	4	E18,E36,E44,E49
31	31		1905590-00	DEC 7401 NAND GATE-QUAD 2IN,OPN COLLECT	4	E9,E24,E28,E35
32	32		1909686-00	7404 INVERTER GATE-HEX 1IN	2	E22,E50
33	33		1909712-00	DEC 8242 COMPARATOR-4BIT N,OPN COLL.	1	E30
34	34		1909928-00	7416 INVERTER GATE-HEX 1IN,(7406 FA	2	E5,E15
35	35		1910436-00	DEC 74123 ONE SHOT-DUAL,RETRIGGERABLE	2	E4,E8
36	36		1910011-00	DEC 7486 X-OR GATE-QUAD 2INPUT	2	E14,E31
37	37		1910018-00	DEC 74193 COUNTER,SYNCHR. UP/DOWN	3	E2,E27,E45
38	38		1910035-00	DEC 74197 COUNTER,ASYNCH UP,H1 SPEED 828	6	E1,E3,E12,E34,E42,E47
39	39		1301890-00	560 1/4W 5% CC (13-00	3	R2,R19,R29
40	40		1910651-00	DEC 74175 FF-D QUAD	1	E19
41	41		1910652-00	74174 FF-D HEX	1	E10
42	42		1911038-00	4024 OSCILLATOR	2	E16,E38
43	43		1911039-00	4044 PHASE FREQUENCY DETECTOR	3	E17,E23,E43
44	44		1911293-00	74172 REGISTER FILE,16BIT MULTIPLE P	3	E20,E26,E29
45	45		1910155-00	DEC 7408 AND GATE,POS.QUAD 2IN 14	3	E13,E51,E53
46	46		9009185-00	JUMPER, WIRE, INSULATED, BLACK BAND	2	W5,W6
47	47		9105740-55	WIRE(WRAP)30AWG UL1423 (91-00 A/R		

	TITLE	SIZE	CODE	DOCUMENT NUMBER	REV
DIGITAL EQUIPMENT CORPORATION MAYNARD, MASSACHUSETTS	PARTS LIST DATA SYNC	K	PL	M8901-YD-DBP	J

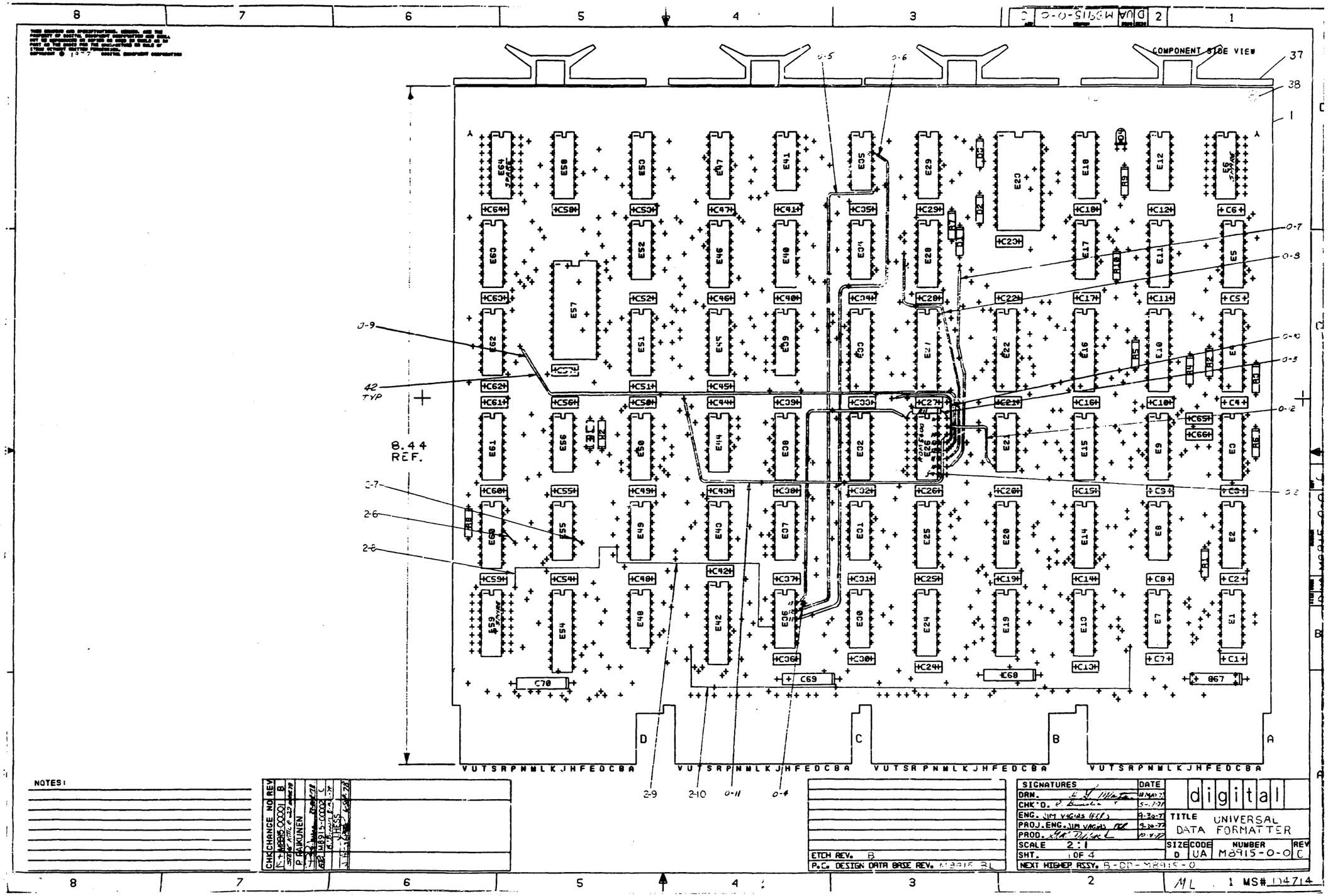
COMPONENT SIDE VIEW
37
38
1
0-5
0-6
0-7
0-8
0-9
0-10
0-3
0-12
0-2
42 TYP
8.44 REF.
2-7
2-6
2-8
2-9
2-10
0-11
0-4
D
C
B
A
V U T S R P N M L K J H F E D C B A
NOTES:
CHK CHANGE NO REV
M8915-00001 B
P. RAIKUNEN
M8915-00002 C
J. HESS
ETCH REV. B
P.C. DESIGN DATA BASE REV. M8915 BL
SIGNATURES
DATE
DRN.
CHK'D.
ENG. JIM VAGIAS
PROJ. ENG. JIM VAGIAS
PROD.
SCALE 2:1
SHT. 1 OF 4
NEXT HIGHER ASSY. B-DD-M8915-0
digital
TITLE UNIVERSAL DATA FORMATTER
SIZE D
CODE UA
NUMBER M8915-0-0
REV C
ML
1 MS# 104714

LINE	ITEM	DOCUMENT NO,	PART NO,	DESCRIPTION	QTY	REFERENCE DESIGNATORS
1	1	D-MD-5012682-0-0	5012682-00	M8915	1	
2	2		1000019-00	150,0 MMF 100V 5%200PPM DM15S (10-00	1	C65
3	3		1001610-01	,01 MFD 100V OR 50V Z5U DISC/800PF MIN	65	C1-C64,C66
4	4		1005306-00	6,8MFD 35V 10% 150D 8,TA (10-00	4	C67-C70
5	5		1100114-00	D 664 QS\75PCB PIV= 25V SP	3	D1-D3
6	6		1110864-00	LED 2MCD@10MA	1	D4
7	7		1300229-00	100 1/4W 5% CC (13-00	1	R9
8	8		1300295-00	330 1/4W 5% CC (13-00	4	R2-R5
9	9		1300316-00	470 1/4W 5% CC (13-00	2	R1,R8
10	10		1300365-00	1 K 1/4W 5% CC (13-00	1	R10
11	11		1301972-00	270 1/4W 5% CC (13-00	1	R7
12	12		1302391-00	20 K 1/4W 5% CC (13-00	1	R6
13	13		1811660-01	OSCILLATOR, CRYSTAL, 10MHZ, 14PIN DIP	1	E56
14	14		1905547-00	DEC 7474 FF-D DUAL,EDGE TRIGGER,15MHZ	1	E49
15	15		1909686-00	7404 INVERTER GATE-HEX 1IN	1	E41
16	16		1909701-00	74154 1 OF 16,BINARY SELECT	1	E23
17	17		1909930-00	7405 INVERTER GATE-HEX 1IN,OPEN COL	1	E17
18	18		1910724-00	74180 PARITY TREE,8BIT GEN/CHK	1	E52
19	19		1911573-00	748280 PARITY GEN/CHKR,9BIT ODD/EVEN	4	E12,E21,E31,E48
20	20		1912697-00	LS174 FF-D HEX W/CLEAR	1	E46
21	21		1912799-00	LS00 NAND-GATE-QUAD 2IN,POSITIVE	2	E35,E55
22	22		1912803-00	LS04 INVERTER GATE-HEX 1IN	5	E1,E7,E8,E43,E44
23	23		1912805-00	LS08 AND GATE-QUAD 2IN,POSITIVE	1	E36
24	24		1912819-00	LS42 DECODER,BCD-DECIMAL	3	E29,E53,E60
25	25		1912820-00	LS51 A-O-I GATE 2-WIDE 2IN/3IN	1	E27
26	26		1912829-00	LS86 X-OR GATE-QUAD 2IN	2	E30,E34
27	27		1912834-00	LS112 FF-JK DUAL,EDGE TRIGGER,NEG,	7	E32,E39,E45,E47,E58,E51,E61
28	28		1912837-00	LS123 ONE SHOT-DUAL,RETRIGGERABLE	1	E3
29	29		1912844-00	LS151 MUX 1 OF 8 & DATA SELECTOR	2	E18,E38
30	30		1912847-00	LS157 MUX 1 OF 2(QUAD)	1	E5

REVISION HISTORY			VARIATIONS FOR THIS ASSY,	FIRST USED ON: TM03		DIGITAL EQUIPMENT CORPORATION MAYNARD, MASSACHUSETTS			
CHK	ECO NO	REV	00,YA			TITLE			
ER	00002	C		MADE BY: F. MAY	DATE: 01-AUG-78	PARTS LIST			
				CHECKED: C. BEVERLIE	DATE: 01-AUG-78	UNIVERSAL DATA FORMATTER			
				DSN,ENG,: J. VAGIAS	DATE: 01-AUG-78	(VAR. 00)			
				PROD,: G. R. DILLARD	DATE: 01-AUG-78	SIZE: K	CODE: PL	DOCUMENT NUMBER: M8915-0-DBP	REV: C
				RESP,ENG,: J. VAGIAS	DATE: 01-AUG-78	ASSY,NO,: D-UA-M8915-0-0			EDIT: 3

"THIS DRAWING AND SPECIFICATIONS HEREIN, ARE THE PROPERTY OF DIGITAL EQUIPMENT CORPORATION AND SHALL NOT BE REPRODUCED OR COPIED OR USED IN WHOLE OR IN PART AS THE BASIS FOR THE MANUFACTURE OR SALE OF ITEMS WITHOUT WRITTEN PERMISSION.
COPYRIGHT 1978, DIGITAL EQUIPMENT CORPORATION "

LINE	ITEM	DOCUMENT NO.	PART NO.	DESCRIPTION	QTY	REFERENCE DESIGNATORS
31	31		1912849-00	LS161 COUNTER,SYNCHR,4BIT BINARY	2	E58,E63
32	32		1912864-00	LS279 LATCH,QUAD-S-R	1	E28
33	33		1912867-00	LS298 MUX 1 OF 4,2IN W/STORAGE	11	E2,E9,E11,E13-E15,E19,E20,E24,
					CONT	E25,E40
34	34		1914414-00	2907 TRANSCEIVER,BUS,QUAD	8	E4,E10,E16,E22,E27,E33,E42,E54
35	35		23014D1-00	D1-02 PROM,	1	E57
36	36		23196A1-00	A1-07 PROM,	1	E62
37	37		9008337-06	HANDLE, FLIP CHIP, MAGENTA 6	4	
38	38		9006732-00	EYELET, ROLLED FLANGE, .121 OD X .219 LG	8	
39	39		9009185-00	JUMPER, WIRE, INSULATED, BLACK BAND	1	W2
40	40		23212A1-00	A1-03,A1-04,A1-05 PROM,	1	E26
41	41		1300432-00	3 K 1/4W 5% CC (13-00	1	R11
42	42		9105740-55	WIRE(WRAP)30ANG UL1423 (91-00	A/R	
43	43		1301423-00	******** THIS ITEM IS NOT USED *********	-	
44	44		1811660-03	******** THIS ITEM IS NOT USED *********	-	
45	45		1912389-00	******** THIS ITEM IS NOT USED *********	-	
46	46		1912896-00	******** THIS ITEM IS NOT USED *********	-	
47	47		1918545-00	******** THIS ITEM IS NOT USED *********	-	
48	48		1918956-00	******** THIS ITEM IS NOT USED *********	-	
49	49	I.C. SPARES		I.C. SPARES	3	E6,E59,E64
50	50	B-DD-M8915-0-0		DRAWING DIRECTORY	REF	
51	51	D-UA-M8915-0-0		UNIT ASSEMBLY	REF	
52	52	D-CS-M8915-0-UDF		CIRCUIT SCHEMATICS	REF	

	TITLE	SIZE	CODE	DOCUMENT NUMBER	REV
DIGITAL EQUIPMENT CORPORATION MAYNARD, MASSACHUSETTS	PARTS LIST UNIVERSAL DATA FORMATTER (VAR, 08)	K	PL	M8915-0-DBP	C