SIZE	CODE	NUMBER	REV.
B	CS	M660-0-1	A

THIS SCHEMATIC IS FURNISHED ONLY FOR TEST AND MAINTENANCE PURPOSES. THE CIRCUITS ARE PROPRIETARY IN NATURE AND SHOULD BE TREATED ACCORDINGLY.
COPYRIGHT 1968 BY DIGITAL EQUIPMENT CORPORATION

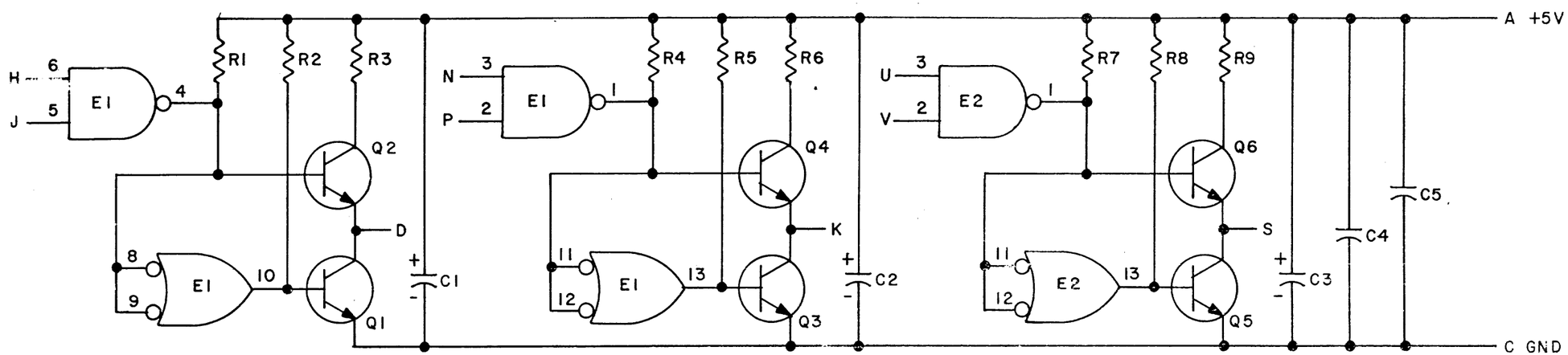

NOTES:
PIN 7 ON EACH IC = GND
PIN 14 ON EACH IC = +5V

REFERENCE DESIGNATION	DESCRIPTION	PART NO.
E1,E2	INTEGRATED CKT. DEC7401N	1905590
Q1-Q6	TRANSISTOR DEC3009B-S	1503100
R3,R6,R9	RES. 27 1/2W 5% CC	1302253
R2,R5,R8	RES. 1.5K 1/4W 5% CC	1300391
R1,R4,R7	RES. 470 1/4W 5% CC	1300316
C4,C5	CAP. .01MFD 100V 20% DISC	1001610
C1-C3	CAP. 6.8MFD 35V 20% S.TANT	1000067
	PARTS LIST	A-PL-M660-0-0

PARTS LIST

REVISIONS		
CHK	CHG NO.	REV.
[illegible]	00001	A

DRN.	M. Haller	DATE 7-12-68
CHK'D	W. Mullen	DATE 7/12/68
ENG.	[illegible]	DATE 7/24/68
PROD.		DATE

TRANSISTOR & DIODE CONVERSION CHART

DEC	EIA	DEC	EIA
D664	IN3606		
IN750	SAME		
DEC3009B	2N3009		

digital EQUIPMENT CORPORATION
MAYNARD, MASSACHUSETTS

TITLE POSITIVE LEVEL DRIVER M660

SIZE	CODE	NUMBER	REV
B	CS	M660-0-1	A

PRINTED CIRCUIT REV. B

DEC FORM NO.
DRB 102

PINK

DIST. 434 435² 324