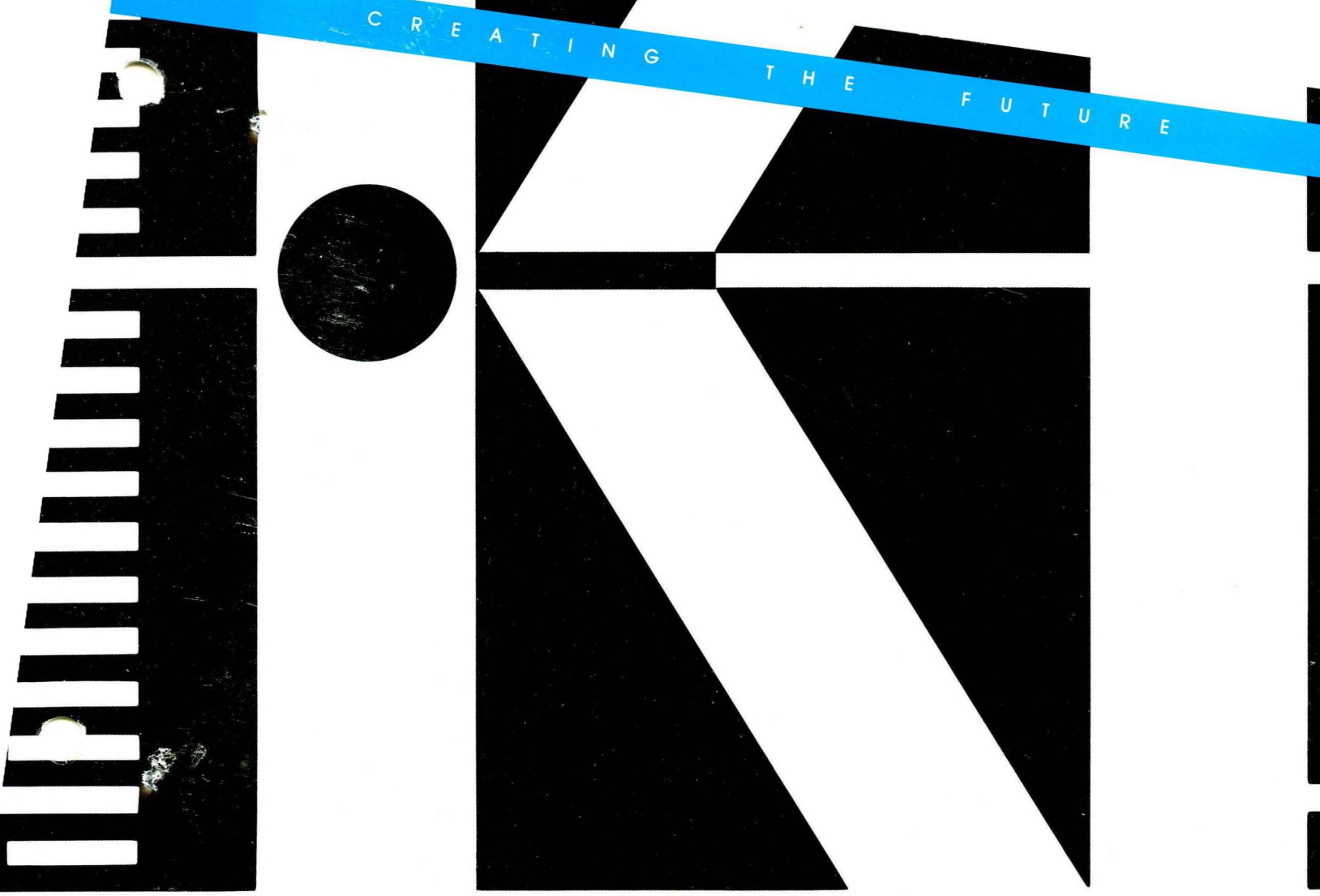

Kontron Elektronik

Operations Manual

LA-5000-03

KONTRON ELECTRONICS

A BIT MORE

CONTENTS

		Page
CHAPTER 1 - INTRODUCTION		
1.1	Equipment	1-3
1.2	Back Panel	1-4
1.3	Probe Connections	1-6
1.4	Hardware Description	1-7
CHAPTER 2 - CONCEPTS		
2.1	Menus	2-1
2.2	Displays	2-2
2.3	Changing Parameters	2-3
2.3.1	Roll Up/Roll Down Keys	2-3
2.3.2	Alphanumeric Keys	2-3
2.3.3	Cursor Groups	2-4
2.3.4	User-Assigned Names	2-4
2.4	Keypad	2-5
2.5	Using the LA	2-11
2.5.1	Pre-Recording Setup	2-11
2.5.1.1	Configuration Menu	2-11
	Channel Arrangement	2-11
	Activating Glitch Recording	2-12
	Clock Assignment	2-12
	Setting Memory Depth	2-12
	Setting Trigger Depth	2-13
2.5.1.2	Trigger Words Menu	2-13
2.5.1.3	Trigger Sequence Menu	2-14
	Instruction Levels	2-14
	Recording Modes	2-14
	Trace Conditions	2-14
	Trigger Monitor	2-14
2.5.2	Recording	2-15
2.5.3	Post-Recording Displays	2-15
2.5.3.1	Timing Diagram	2-16
2.5.3.2	Data List	2-16
2.5.4	Post-Recording Data Manipulation	2-17
2.5.4.1	File Manager	2-17
2.5.4.2	Compare Menu	2-17
2.5.4.3	I/O Menu	2-17

Page

CHAPTER 3 - GETTING STARTED

3.1 Powering Up 3-1
3.2 Making Backup Disks 3-2
3.3 LA Operating Software 3-4
3.4 Connecting Probes to LA Back Panel for Self-Test 3-5
3.4.1 Connections for Self-Test 3-5
3.4.2 Executing the Self-Test 3-6

CHAPTER 4 - STANDARD MENUS

4.1 Configuration Menu 4-1
4.1.1 Non-Interlace/Interlace Operation . . . 4-3
4.1.2 Probe Operating Modes 4-3
4.1.3 Threshold Voltage 4-4
4.1.4 Channel Arrangement 4-4
4.1.5 Clock Input 4-4
4.1.6 Clock Qualifier Words (K Qual or J Qual) 4-5
4.1.7 Sample Rate 4-6
4.1.8 TRG (Trigger) Location 4-6
4.1.8.1 To Set Recording Memory Length 4-7
4.1.8.2 To Define Trigger Position Within Memory 4-8
4.2 Trigger Words Menu 4-9
4.2.1 Input Groups 4-11
4.2.2 Polarity 4-12
4.2.3 Radix 4-12
4.2.4 Mnemonics 4-12
4.2.5 Master Clock (MAS CLK) 4-13
4.3 Trigger Sequence Menu 4-14
4.3.1 Trigger Sequence Conditions Overview . . 4-15
4.3.1.1 Triggering on Non-Events . . . 4-16
4.3.1.2 Triggering on Glitches 4-16
4.3.2 Relationship Between Trigger Sequence Menu and Other Menus 4-16
4.3.2.1 Setting the Trigger Point . . . 4-16
4.3.2.2 Master Clocks 4-17

Page

CHAPTER 4 - STANDARD MENUS

4.4 Menu Structure 4-17
4.4.1 Upper Portion of Menu 4-18
4.4.1.1 Number of Recordings 4-18
4.4.1.2 Trigger Filter 4-18
4.4.1.3 Recording Modes 4-19
Normal Recording 4-20
Data Qualified Recording . . . 4-20
Transition Recording 4-22
4.4.2 Lower Portion of Menu 4-22
4.4.2.1 Maximum/Minimum Number of Instruction Levels 4-24
4.4.2.2 Changing Number of Instruction Levels 4-25
4.4.2.3 Event Words 4-25
4.4.2.4 Event Word Recognizers 4-26
4.4.2.5 State/Edge Triggering 4-26
4.4.2.6 Occurrence Counter 4-27
4.4.2.7 Time Windows 4-28
Open Time Windows 4-28
Closed Time Windows 4-28
4.4.2.8 Delay 4-29
4.4.2.9 Logical Conjunctions 4-29
4.4.2.10 Final Instructions in Each Level 4-29
4.5 Glitch Triggering 4-30
4.5.1 Glitch Triggering Over All Glitch Channels 4-30
4.5.2 Glitch Triggering Over Selected Channels 4-30
4.5.3 Combined Glitch/Pattern Triggering . . . 4-31
4.5.3.1 Example of ANDing 4-31
4.6 Trigger Delay Active Message 4-32
4.7 Trigger Monitor 4-32

Page

CHAPTER 5 - DISPLAYS

5.1 Timing Diagram 5-1
5.1.1 Manipulating the Display 5-4
Setting Number of Displayed Channels . . 5-4
Rearranging and Renaming Channels . . . 5-4
Field Between Channel Number and Mnemonic 5-5
5.1.1.1 Manipulating Horizontal Display 5-5
5.1.1.2 Glitch Display 5-6
5.1.2 Moving through Display 5-7
5.1.2.1 Orientation Lines 5-7
S-Marker 5-7
C-Marker 5-7
T-Marker 5-7
5.1.2.2 How to Scroll in Screen Mode . . 5-8
5.1.2.3 Readout Below Timing Diagram . . 5-8
Memory Addresses S-, C-, and T-Markers 5-8
Time Distances Readout 5-9
5.1.2.4 Jumping through the Recording . 5-9
S-HOME, C-HOME 5-9
5.1.2.5 Moving the Orientation Bar . . 5-10
5.1.3 Manipulating Memory in Display 5-10
5.1.3.1 Memory Field 5-10
Source and Reference 5-11
Source and Reference Compare . . 5-11
Source to Reference Transfer . . 5-11
5.1.3.2 Search Field 5-12
To Activate Search 5-12
Search for Word 5-12
Search for Transition 5-13
Search for Source Equals/Not Equals Reference 5-13
5.1.4 Clock Setting 5-13

Page

CHAPTER 5 - DISPLAYS

5.2 Data List 5-14
5.2.1 Manipulating the Data List 5-17
5.2.1.1 Rearranging Data Columns . . . 5-17
5.2.1.2 Inserting and Deleting Data Columns 5-17
5.2.1.3 Changing a Column's Polarity . . 5-18
5.2.1.4 Changing a Column's Radix . . . 5-19
5.2.1.5 Glitch Display in Data List . . 5-19
5.2.2 Moving through the Data List 5-20
5.2.2.1 Orientation Fields 5-20
S-Marker 5-20
C-Marker 5-20
T-Marker 5-20
How to Scroll in Screen Mode . . 5-21
5.2.2.2 Readout above Data List . . . 5-21
5.2.2.3 Jumping through the Recording . 5-21
S-HOME, C-HOME 5-21
5.2.2.4 Moving by Screen in the Data List 5-22
5.2.3 Manipulating Memory in Display 5-22
5.2.3.1 Memory Field 5-22
Source and Reference 5-23
Differences Between Source and and Reference 5-23
Source to Reference Transfer . . 5-23
5.2.3.2 Search Field 5-24
To Initiate a Search 5-24
Search for Word 5-25
Search for Locations 5-25
Search for Trigger Words . . . 5-25
Entering Search Words 5-26
Search for Source Equal/Not Equal Reference 5-26
Search for Compare False . . . 5-26

Page

CHAPTER 6 - SPECIAL MENUS

6.1 File Manager 6-1
6.1.1 Directory Listings 6-3
6.1.2 Drive Selection 6-4
6.1.3 File Manager Activites 6-4
6.1.3.1 Storing and Recalling LA Setup Files 6-5
6.1.3.2 Other File Operations 6-7
6.1.4 File Status 6-8
6.1.5 Error Messages in the File Manager . . . 6-9
6.2 Compare Menu 6-11
6.2.1 Segment Comparison 6-13
6.2.2 Compare Groups 6-13
6.2.3 Segment Boundaries 6-13
6.2.4 Jitter 6-14
6.2.5 Data Equality/Inequality 6-16
6.2.6 Final Condition Instructions 6-16
6.2.7 And/Or 6-16
6.3 I/O Menu 6-17
6.3.1 Control Field 6-18
6.3.2 Printer Output Field 6-19
6.3.2.1 Parallel/Serial Conversion . . 6-20
6.3.2.2 Supported Printers 6-21
6.3.3 Print Screen 6-21
6.3.4 Interface Test 6-22

CHAPTER 7 - THEORY OF OPERATIONS

7.1 Logic Analyzer Board Functions 7-1
7.1.1 Motherboard 7-1
7.1.2 Time Base and Clock Qualifier Board . . 7-3
7.1.2.1 Board Clocks 7-3
7.1.2.2 Master Clock 7-3
7.1.2.3 Time Base 7-4
7.1.2.4 Interlace Operation 7-4
7.1.2.5 External Clock 7-4

Page

CHAPTER 7 - THEORY OF OPERATIONS

7.1.3 Data Memory Board 7-5
7.1.3.1 Data Input in Non-Interlace Operation 7-6
7.1.3.2 Data Input in Interlace Operation 7-6
7.1.3.3 Conditional RAM 7-6
7.1.3.4 Glitch Detector 7-7
7.1.3.5 Transition Detector 7-7
7.1.3.6 Record Control 7-7
7.1.3.7 Data Memory 7-8
7.1.4 Trigger Sequence Controller 7-8
7.1.4.1 Sequence Controller 7-9
7.1.4.2 Trigger Filter 7-9
7.1.4.3 Occurence Counter 7-10
7.1.4.4 Level Counter 7-10
7.1.4.5 Level Change Control 7-11
7.1.4.6 Level RAM 7-12
7.1.4.7 Record Controller 7-12
7.1.4.8 Record Module 7-13
7.1.4.9 Trigger Delay Counter 7-14
7.1.4.10 Time Measurement Control . . . 7-15
7.1.4.11 Outputs 7-15
7.1.5 Time Measurement Board 7-16
7.1.5.1 Time Counter 7-17
7.1.5.2 Time Memory 7-17
7.2 Data Probes 7-17
7.3 Disassembler Hardware 7-18
7.4 Universal Probe Rack 7-18
7.5 Register Assignment 7-19

CHAPTER 8 - SCHEMATICS

Page

APPENDIX A - DATA FILE FORMATS

A.1 Physical Storage Format A-1
A.2 File Structure of LA Software A-2
A.3 Reference Files A-3
A.3.1 VMM-Based LA Software V2.2x/3.2x . . . A-3
A.3.2 LA Software V2.1x/3.1x A-4
A.4 Data File Format A-4
A.4.1 Non-Interlace Operation. A-5
A.4.2 Interlace Operation A-5
A.4.3 Mixed Operation (Interlace - Non-Interlace) A-5
A.4.4 Different Glitch Mode Samples A-6
A.5 Setup File Format A-7
A.5.1 Non-Intelace Operation A-8
A.5.1.1 All Probes in STD Mode A-8
A.5.1.2 Active GLITCH Probe(s) A-8
A.5.2 Interlace Operation A-8
A.5.3 Mixed Operation (Interlace - Non-Interlace) A-9
A.6 Time Measurement File Format A-9
A.7 Sample Setup and Reference File Dump A-9

APPENDIX B - SERIES III LOGIC ANALYZER SPECIFICATIONS

B.1 Physical Description B-1
B.2 Interface Ports B-2
B.3 Inputs B-2
B.4 Memory and Sample Rates B-3
B.5 Record Mode Sample Rates B-4
B.6 Glitch and Reference Memory B-4
B.7 External Clocking B-5
B.8 Recording Arm Modes B-5
B.9 Setup Screens B-5
B.10 Display Screens B-7
B.11 Triggering B-8
B.12 Options B-9
B.12.1 Performance Analysis B-9
B.12.2 Disassemblers B-10
B.12.3 500MHz High Speed Board B-10
B.12.4 Multiclock Probe B-11
B.12.5 Serial Data Probe B-11
B.12.6 IEEE 488 GPIB Interface (REMCON) . . . B-11

INDEX

TABLES

Number	Title	Page
2-1	Menus, Displays, Reset	2-6
2-2	Cursors, Field/Screen, Home, Roll Up/Down, Help	2-7
2-3	Alphanumeric Keys	2-8
2-4	Insert, Delete, Execute, Run/Stop	2-9
2-5	Function Keys	2-10
4-1	Fields in the Configuration Menu	4-1
4-2	Sample Rates	4-6
4-3	Possible Memory Sizes	4-7
4-4	Fields in the Trigger Words Menu	4-9
4-5	Trigger Sequence Conditions	4-15
4-6	Fields in the Trigger Sequence Menu	4-18
4-7	Instruction Level Conditions	4-24
5-1	Fields in the Timing Display	5-3
5-2	Bit Resolution in the Timing Diagram	5-6
5-3	Sample Rates	5-13
5-4	Fields in the Data List	5-16
6-1	Fields in the Compare Menu	6-2

FIGURES

Number	Title	Page
1-1	Kontron Logic Analyzer	1-2
1-2	Back Panel Connections	1-5
1-3	Probe Connections	1-6
1-4	Board Arrangement in the LA	1-7
1-5	Functional Block Diagram	1-9
2-1	Major and Minor Cursors	2-4
2-2	LA Keypad	2-5
3-1	LA Disk Access	3-1
3-2	Configuration Menu (Default)	3-4
3-3	Configuration Menu for Self-Test of J-Clock	3-7
4-1	Configuration Menu	4-2
4-2	Trigger Location Bar in Configuration Menu	4-8
4-3	Trigger Words Menu	4-10
4-4	Default Input Group Arrangement	4-11
4-5	Trigger Sequence Menu	4-14
4-6	Upper and Lower Portion of Trigger Sequence Menu	4-17
4-7	Example of Occurrence Counter	4-27
5-1	Timing Diagram	5-1
5-2	Shaded vs. Waveform Trace	5-5
5-3	Memory Addresses for S-C- and T-Markers	5-9
5-4	Data List	5-14
6-1	File Manager	6-2
6-2	Compare Menu	6-11
6-3	Comparison with +1 Jitter Setting	6-14
6-4	I/O Menu	6-17
6-5	Parallel/Serial Conversion Switches	6-20
7-1	Block Diagram of the Logic Analyzer Hardware	7-2

CHAPTER 1

INTRODUCTION

The Kontron Logic Analyzer (LA) is a versatile, sophisticated, menu-driven instrument that you can use for software and hardware development, fine-tuning the external target system, and system integration.

The LA features up to 64 channels, memory depth up to 8K, and sample rates up to 500 MHz. You can use this instrument to analyze 16-bit data buses with one group of channels, and have other channels free for simultaneous timing analysis of data transfer at an interface.

Both a Timing Diagram and Data List (i.e., state table) are available for all channels, with no change in hardware. Channels are selected for display either by channel number or by user-assigned mnemonics.

The LA's significant features include:

- 32- 48- or 64-channel arrangement
- Up to 8K memory depth at a sample rate as high as 500 MHz
- Multilevel triggering, including glitch triggering
- Edge detection
- Trigger filter
- Three recording modes -- Normal, Data Qualified, and Transition
- Dual disk drives

Because the LA operating system is stored on disk, system software upgrades are easily accomplished. Hardware upgrading is seldom required, but it too can be simple -- as simple as installing a higher revision cicruit board.

Once you have defined a set of operating parameters appropriate for your target, you can store them on disk and recall them without having to respecify the same parameters. You can also store data on disk for source to reference comparisons.

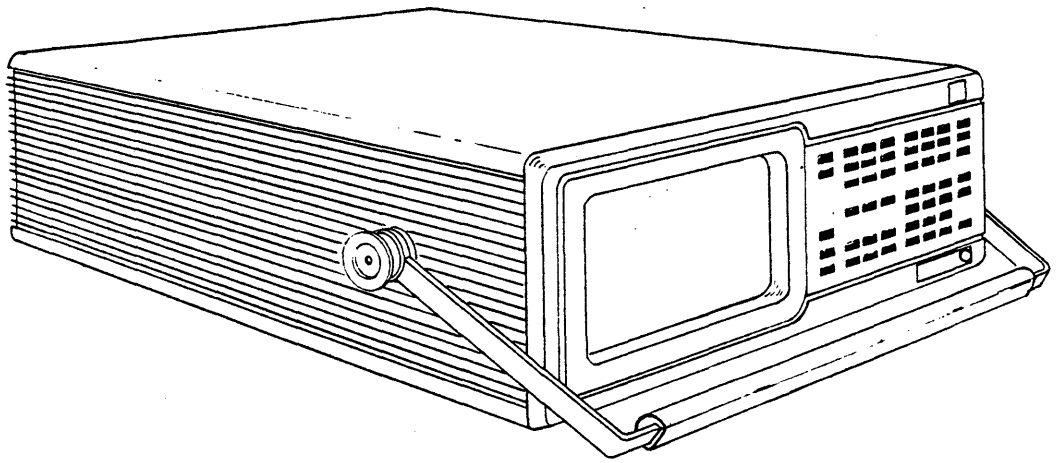

Figure 1-1. Kontron Logic Analyzer

1.1 EQUIPMENT

In its standard configuration, the LA includes the following:

PROBES (see Figure 1-3)

LA64A 10 probes: data probes 1 - 8, clock probes J and K

LA48A 8 probes: data probes 1 - 6; clock probes J and K

LA32A 5 probes: data probes 1, 2, 5, 6; clock probe J

PROBE CONNECTOR SETS

LA64A 10 sets each, consisting of a flat plug with 9 input circuits and 9 test clips

LA48A 8 sets

LA32A 5 sets

DISKS

Two disks each, labeled with LA model number and current software version.

POWER CABLE

TWO MULTICOLOR RIBBON JUMPER CABLES

OPERATIONS MANUAL (LA-5000-03) (this document)

1.2 BACK PANEL

As shown in Figure 1-1, the LA back panel connections are as follows:

1. Power connection.
2. Video output (BNC 1V p-p, 75 ohm).
3. Printer interfaces (RS-232C serial and Centronics-compatible parallel output).
4. Additional RS-232C interface for remote control (REMCON) option.
5. Optional external ASCII keyboard connection.
6. Data probe connections.
7. Clock probe connections.
8. Test output for data probes. See 3.4 for information on Self-Test.
9. Test output for clock probes. See 3.4 for information on Self-Test.
10. Trigger output, which sends an active high TTL signal when the LA triggers.
11. Trace (Recording) output:

    a. Normal Recording -- The rising edge of a TTL output appears at the beginning of recording. The falling edge occurs at the end of trigger delay.

    b. Data Qualified or Transition Recording -- This signal goes high only when a qualified data word is read into memory. This signal goes low at the end of trigger delay.

    See 4.4.1.3 for more information on recording modes.

12. IEEE 488 interface option for GPIB. See LA document 2310-5103 for more information.
13. Trigger Level, for tracing trigger sequence level.

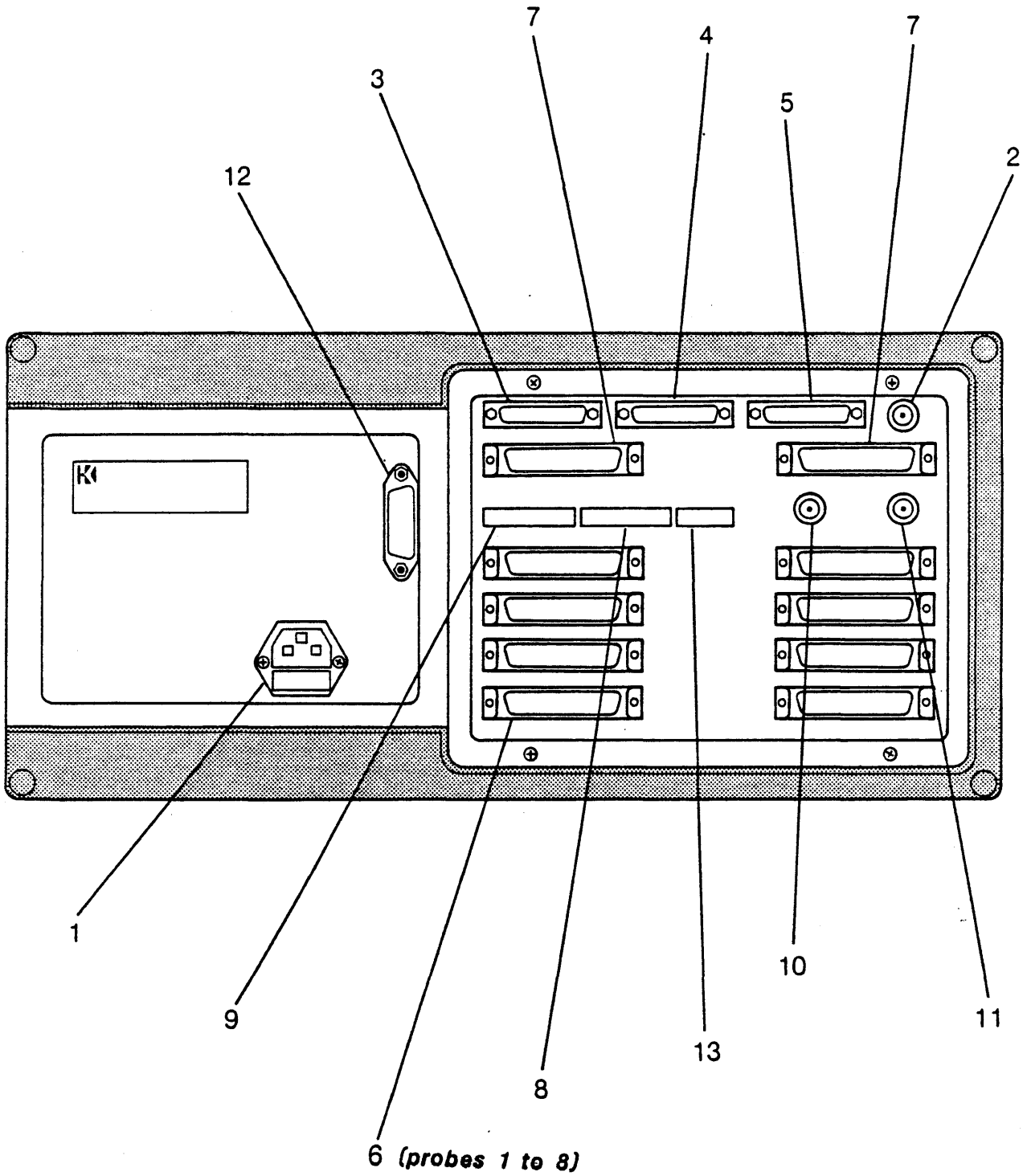

Figure 1-2. Back Panel Connections

1.3 PROBE CONNECTORS

You can connect probes to your target system with either the color-coded connector sets shipped with the LA, or by using the optional probe rack which can connect to configurator modules.

The colors on the connectors delivered with the LA correspond to the resistor color code. The white ground wire should be connected to the target system ground. The clips can be pulled off the connectors, and the ends can be attached to wire wrap posts or IC test clips.

If you make your own cable for connecting probe inputs to the target, a 16-wire flat cable or a cable consisting of pair inputs is necessary, so that there is a ground wire between two signal inputs. The cables should not be too long (approximately 45 cm or 18 inches maximum) to avoid circuit capacitance and induction at higher frequencies.

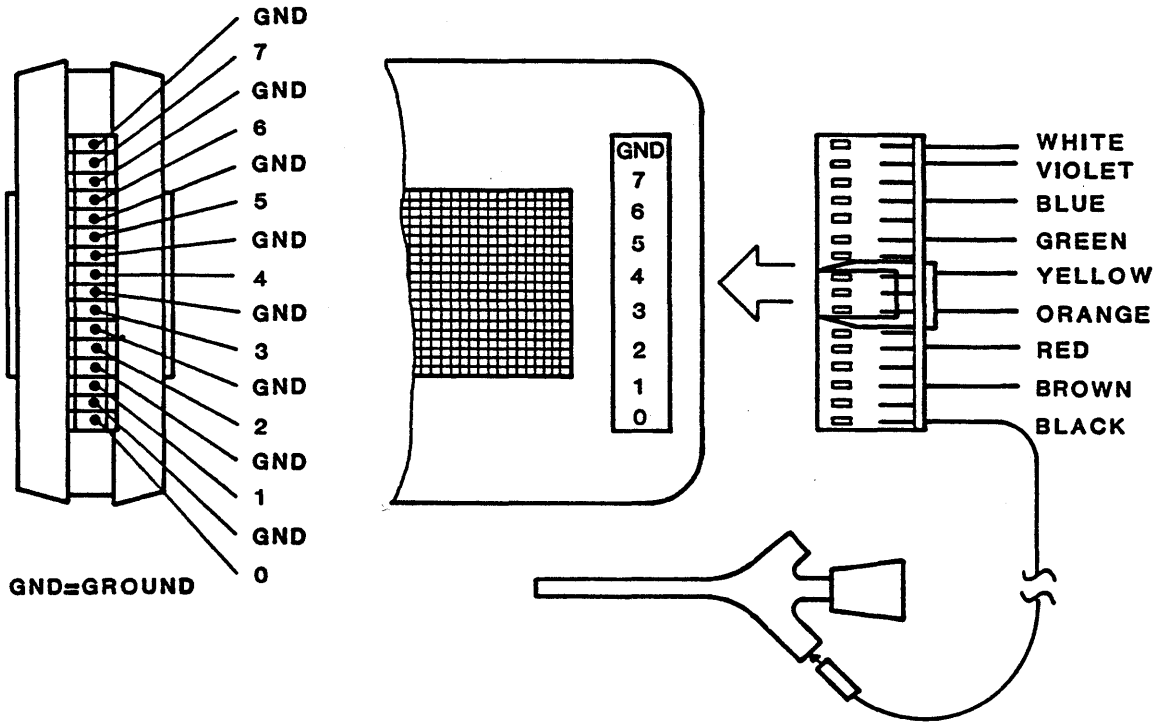

Figure 1-3. Probe Connections

1.4 HARDWARE DESCRIPTION

The four main functional hardware components of the LA are listed below. See Figure 1-4 for the board arrangement in the LA.

- Clock generation and control provided by the Time Base and Clock Qualifier (TBQ) board.
- Trigger sequence control provided by the Trigger Sequence Controller (SEQ) board.
- Time measurement recording provided by the optional Time Measurement (TMB) board. This can record time information during Data Qualified and Transition Recording.
- Data recording provided by the Data Memory (DMB) board. There can be as many as four DMB boards in the LA, and each has its own clock. Each DMB board supports 2 probes (16 channels) for recording. A DMB clock can be derived from an external clock or generated internally.

A functional block diagram of the LA basic hardware and software design is shown in Figure 1-5. Chapter 7 (Theory of Opertaions) discusses this information in more detail.

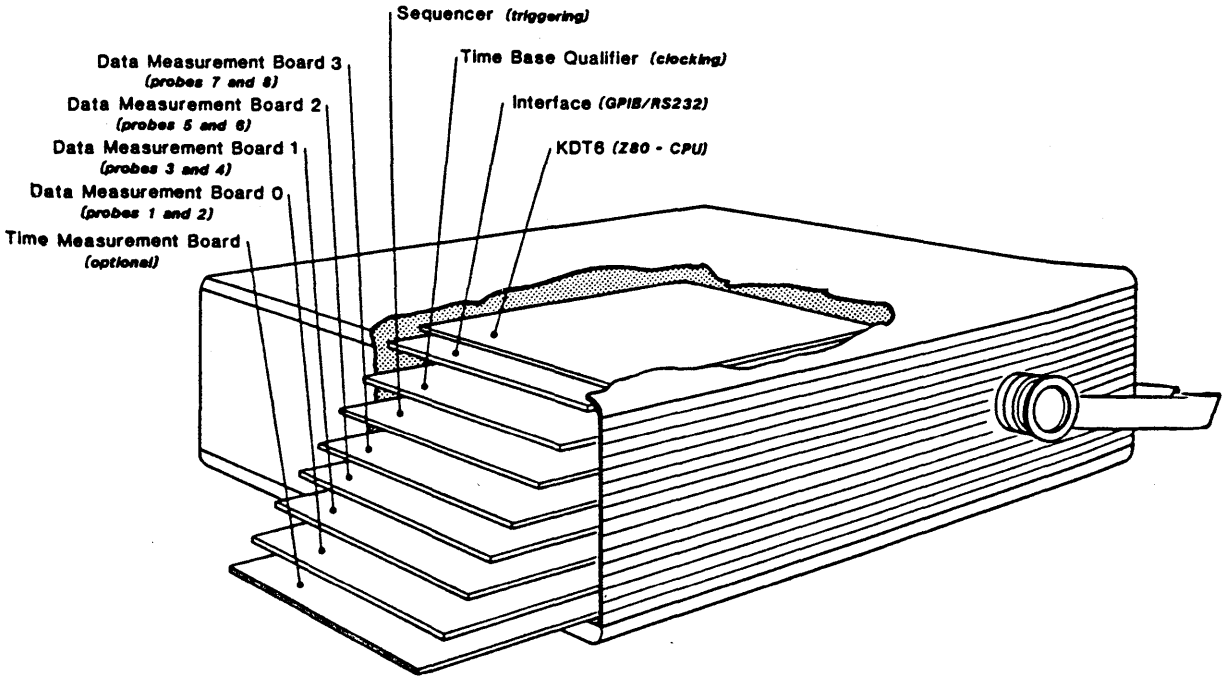

Figure 1-4. Board Arrangement in the LA

The CPU board of the LA is the Z80A-based KDT6 board, which is a general-purpose computer board that is also used in the Kontron KDS 908 microcomputer. Associated with this Z80 board is a CPU controller, a floppy disk controller, 256K of RAM, two serial ports and one parallel port.

The LA I/O board is located directly below, and is connected to, the KDT6 board. The I/O board has the video I/O connection, serial I/O transceivers, the reset logic, the serial/parallel ports, the IEEE-488 connection, the logic analyzer interface to the front panel keyboard, and the CPU-driven connection to the internal TTL bus.

All of the boards are plugged into the motherboard of the LA, which has a double Eurocard bus. There are seven pairs of 64-pin connectors; each connector pair is assigned to one of two buses.

The two buses are the A bus and the B bus. The A bus is a relatively slow TTL bus; the Z80 CPU accesses the other components and the memory of the LA over this TTL bus. The B bus is a high-speed ECL bus; it is used for communication betweeen boards during a recording or trigger search.

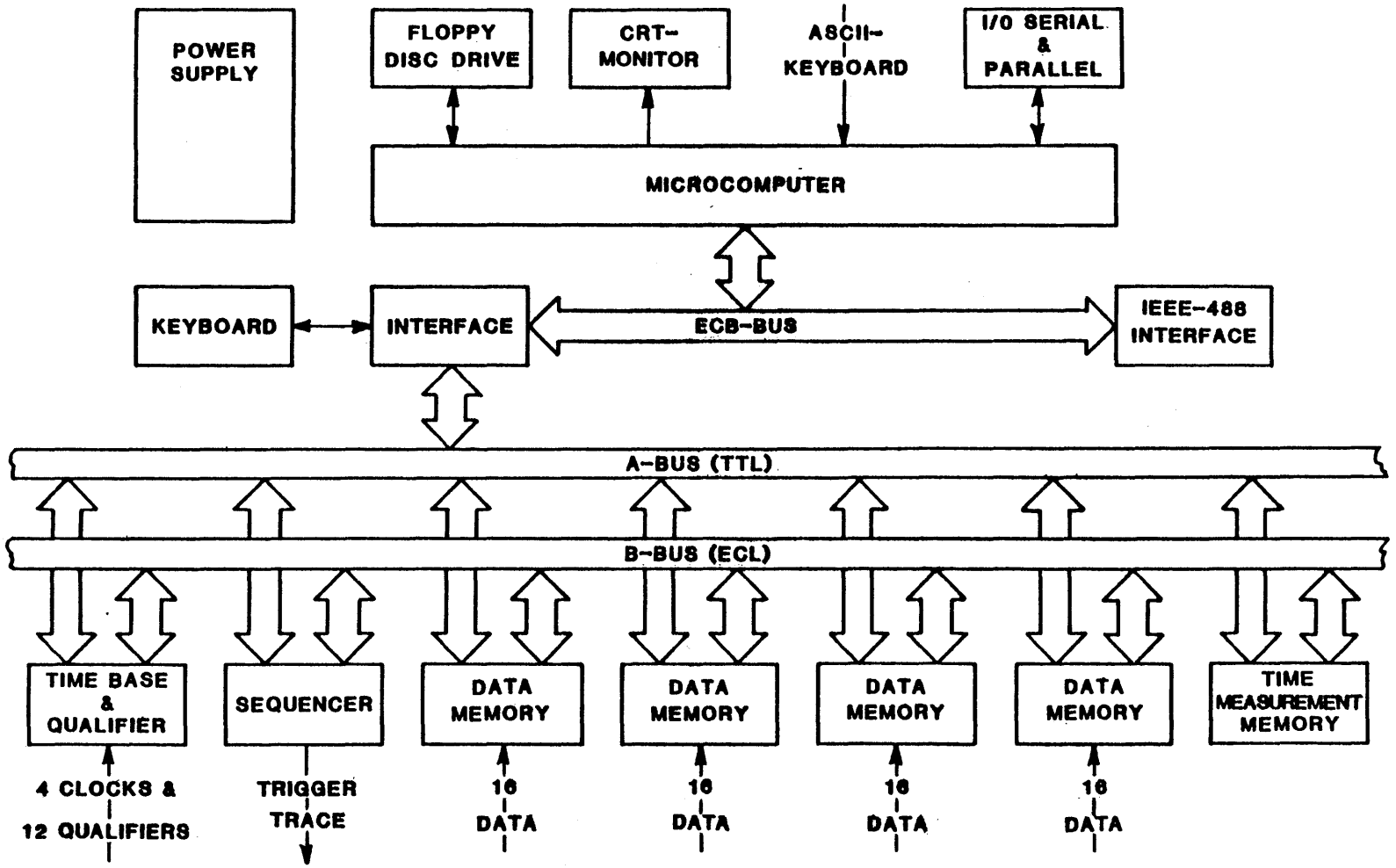

Figure 1-5. Functional Block Diagram

CHAPTER 2

CONCEPTS

The Kontron Logic Analyzer (LA) is a menu-driven instrument featuring six basic menus and two displays. The menus and displays are designed for user modification. You can customize your recordings from pre-recording setup and post-recording arrangement to file- and memory-level manipulation of the recorded data.

You modify and move through the menus and displays by pressing keys on the LA keypad or on an (optional) external ASCII keyboard. In this chapter we discuss the LA keypad.

2.1 MENUS

The six basic LA menus are functionally separated into two groups of menus: Standard and Special. You access the menus in each group by pressing the STD key for Standard Menus, or the SPEC key for Special Menus. When you repeatedly press the STD or SPEC keys, the LA sequentially displays the menus in that group.

In the Standard Menus you set up all pre-recording conditions, including trigger sequencing. The three Standard Menus are:

- **Configuration**

  In this menu you set the sample rate, memory depth, operating mode, glitch mode, threshold voltage, channel arrangement, recording clocks, memory length, and trigger position.

- **Trigger Words**

  In this menu you assign the probes into logical channel groups, and assign word numbers or mnemonics for up to 32 trigger or event words.

- **Trigger Sequence**

  In this menu you define as many as 14 sequential instruction levels that qualify a trigger point. Here you also select the recording mode and trace conditions.

The three Special Menus are:

- **File Manager**

  In this menu you store and recall setup and reference files on disk. You can also work at the CP/M operating system level to write-protect, copy and rename files.

- **Compare**

  In this menu you set parameters for cyclic comparisons between source and reference memory (known as "baby-sitting" mode).

- **I/O**

  In this menu you set parameters controlling the LA's nontarget input and output functions, including RS-232C and IEEE ports, optional remote control operation and the parallel/serial printer port for screen-to-printer dumps of displays.

2.2 DISPLAYS

Once you have made a recording with the LA, you can view captured data in the Timing Diagram and/or the Data List display. In addition to a visual representation of the recording, both displays contain user-modifiable fields. With these fields you can specify both the portion of the recording you want to examine, and the characteristics controlling the appearance of that portion.

You access the Timing Diagram and Data List by pressing the corresponding keys (TIMING, LIST) on the LA keypad.

- **Timing Diagram**

  This display shows the data as horizontal waveform traces. You control the screen magnification power and the order of displayed channels.

- **Data List**

  This display shows the data in columns corresponding to probe groups. You control the sequence, polarity and radix of each column.

2.3 CHANGING PARAMETERS

In the following discussions, a parameter field is a user-modifiable entry in a menu or display. The LA displays all parameters fields in reverse-video (green on black). You can change all parameter fields using the LA keypad. In the lower left corner of every menu and the Data List display, the LA displays a description of the valid keys you can press to change the field at the cursor.

When you change a value in certain fields of the menus and displays, the appearance of the entire screen can be affected. For example, selecting a different magnification in the Timing Diagram alters the appearance of recorded data. In the Data List display, changing the radix of a channel changes the appearance of the displayed data. In certain menus (such as the I/O Menu), new parameter fields appear when you change individual settings. Pressing the RESET key automatically returns any menu or display to its default state.

2.3.1 ROLL UP/ROLL DOWN KEYS

For most parameters you can press the ROLL UP/DOWN key while the cursor is over that field to change the value. Repeatedly pressing the ROLL UP/DOWN keys displays all of the available values for that field. ROLL UP cycles in one direction through allowed values; ROLL DOWN cycles in the opposite direction.

2.3.2 ALPHANUMERIC KEYS

You can enter new values for certain parameters directly via alphanumeric input from the LA keypad. When this is possible, the message "ENTER TRIGGER WORD NUMBER OR MNEMONIC" appears at the lower left of the screen. Numeric entries that exceed the acceptable limit for a field are automatically corrected to the maximum or minimum limit. Illegal symbols are ignored.

2.3.3 CURSOR GROUPS

The LA keypad contains two sets of cursor keys that allow you to move the cursor from field to field, and between individual characters in a field. In this manual, we refer to these as major cursor keys and minor cursor keys. The cursor groups perform different functions, depending on your selection of FIELD or SCREEN mode. See 2.5.3 for more information on Field and Screen modes.

As shown in Figure 2-1, the major cursors are the set of four directional keys on the upper part of the keypad. The minor cursors are the right and left directional keys near the center of the keypad, labeled CURSOR.

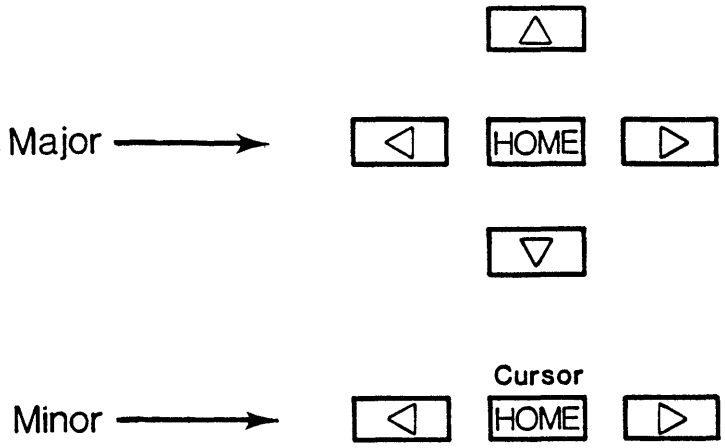

Figure 2-1. Major and Minor Cursors

2.3.4 USER-ASSIGNED NAMES

Several fields in the LA are designed to accept user-assigned names. These include event word mnemonics in the Trigger Words Menu, and individual channels names in the Timing Diagram.

Assigning mnemonics enables you to customize your setup. If you do not assign mnemonics, the LA automatically assigns sequential labels (e.g., WRD1, CH05) to these fields.

2.4 KEYPAD

As shown in Figure 2-2, the LA keypad contains five groups of functionally related keys. Each group is discussed in a following subsection.

Many keys perform multiple functions, depending on the selected menu or display. Because we do not want to introduce functions that are better discussed later in this manual, the discussions immediately following are limited to the basic functions of each key.

Refer to the following Tables 2-1 through 2-5 for descriptions of each key's function.

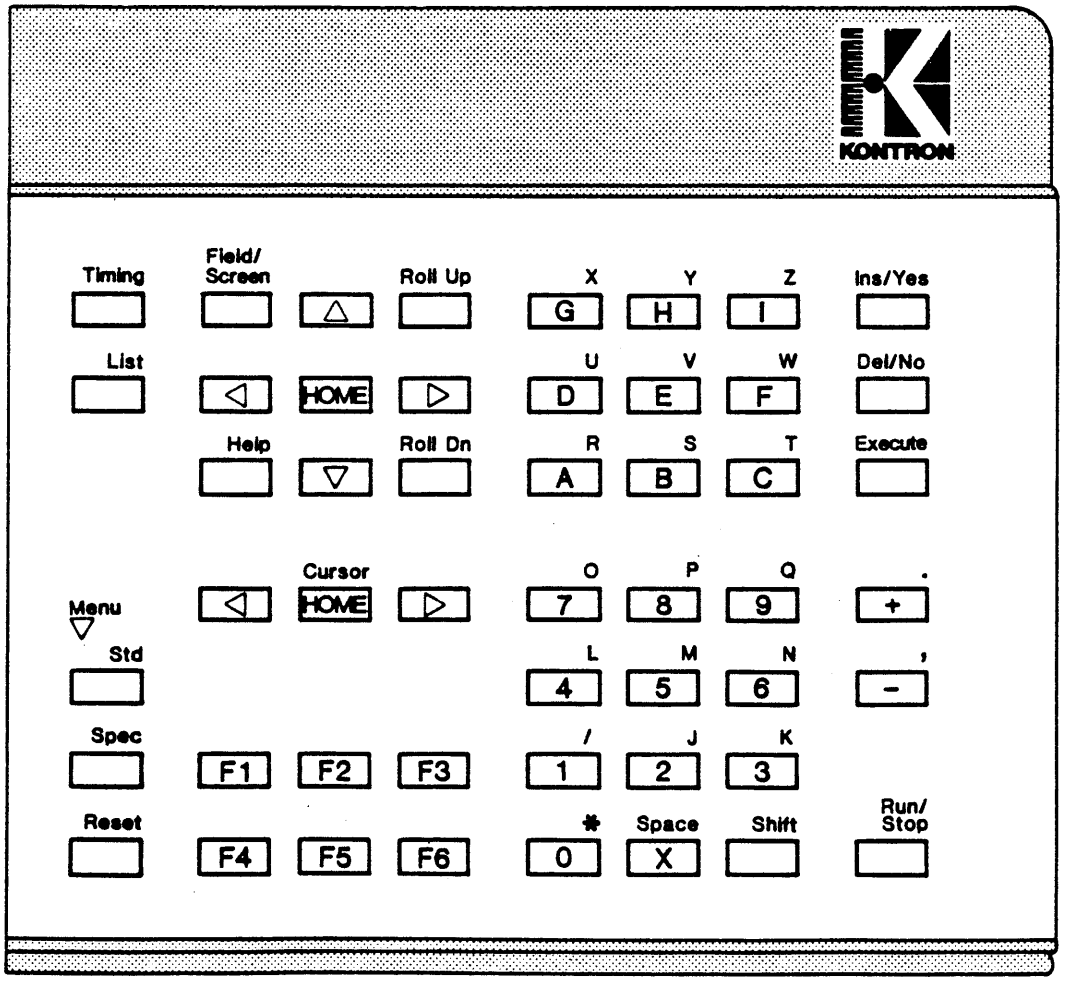

Figure 2-2. LA Keypad

Table 2-1. Menus, Displays, Reset

Keys	Functions
STD	Displays the three Standard Menus one at a time, each time the key is pressed. The Standard Menus are Configuration, Trigger Words, and Trigger Sequence.
SPEC	Displays the three Special Menus one at a time, each time the key is pressed. The Special Menus are File Manager, Compare, and I/O.
TIMING	Displays the Timing Diagram.
LIST	Displays the Data List (state table).
RESET	Loads the default setup file WSETUP00.WSE from the disk in drive A, and resets the instrument according to the parameters stored in the default file.

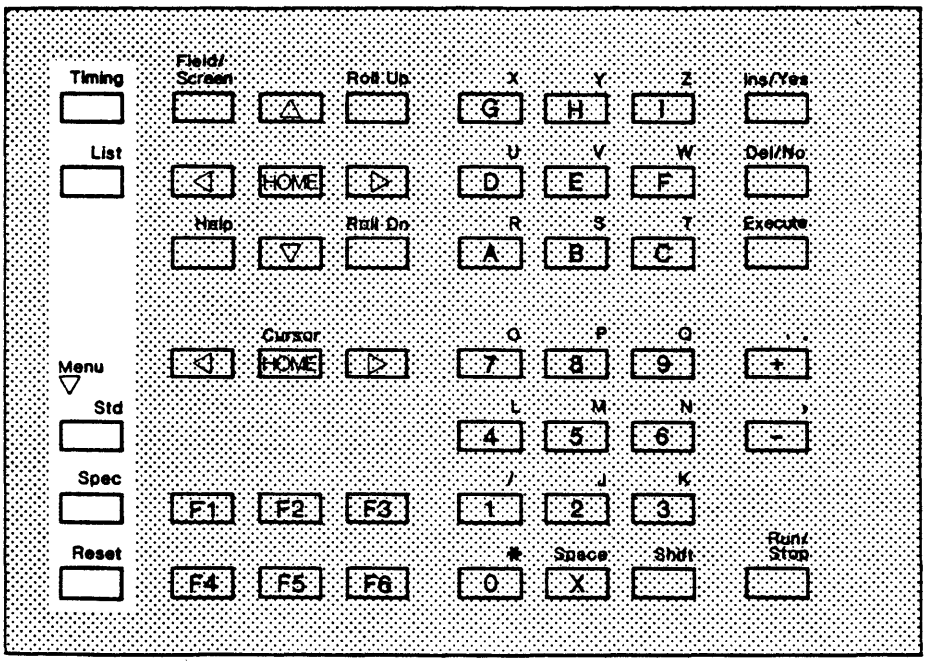

Table 2-2. Cursors, Field/Screen, Home, Roll Up/Down, Help

Keys	Functions
Major Cursors	Moves the cursor from field to field. Pages through displays in SCREEN mode.
Minor Cursors	Moves from character to character within a field. Scrolls through displays in SCREEN mode.
HOMES	Jumps between user-defined locations in the Timing Diagram and Data List. Also displays Trigger Sequence Menu from Trigger Monitor.
FIELD/ SCREEN	Toggles between FIELD and SCREEN modes. See 2.5.3 for more information on FIELD and SCREEN modes.
ROLL UP/ DOWN	Rolls through the selections available in a blinking parameter field. If you ROLL UP past your selection, pressing ROLL DOWN displays the available selections in reverse order.
HELP	Displays explanation of the currently selected field, the possible ROLL choices, keys that can be used to enter choices, and a description of the field.

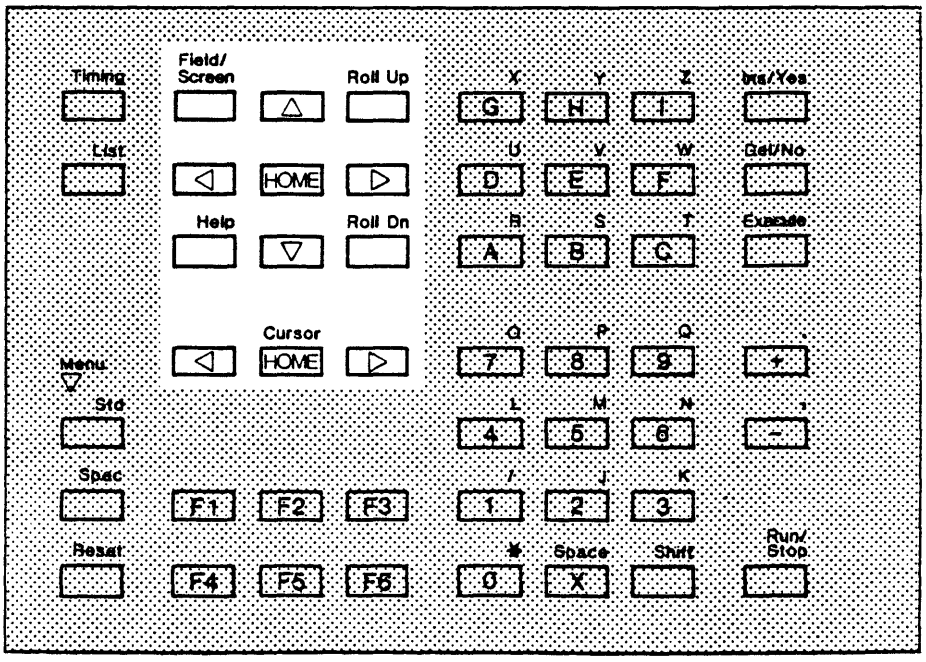

Table 2-3. Alphanumeric Keys

Keys	Functions
Letters A-G	Inputs letters or hex digits in fields which accept letters.
Letters J-Z	Inputs letters after you press the shift key once before each letter.
0-9 A-F	Enter numbers directly. The LA automatically corrects numeric entries that exceed the acceptable limits for the parameter field; it ignores illegal symbols.
Don't Care "X"	Indicates a character or digit that can be any value. Shift-X inserts a space in user-defined mnemonics.
+/-	Changes polarity in trigger word and channel name mnemonics. These keys can also be used to designate pre- and post-trigger locations in the Timing Diagram and Data List displays.

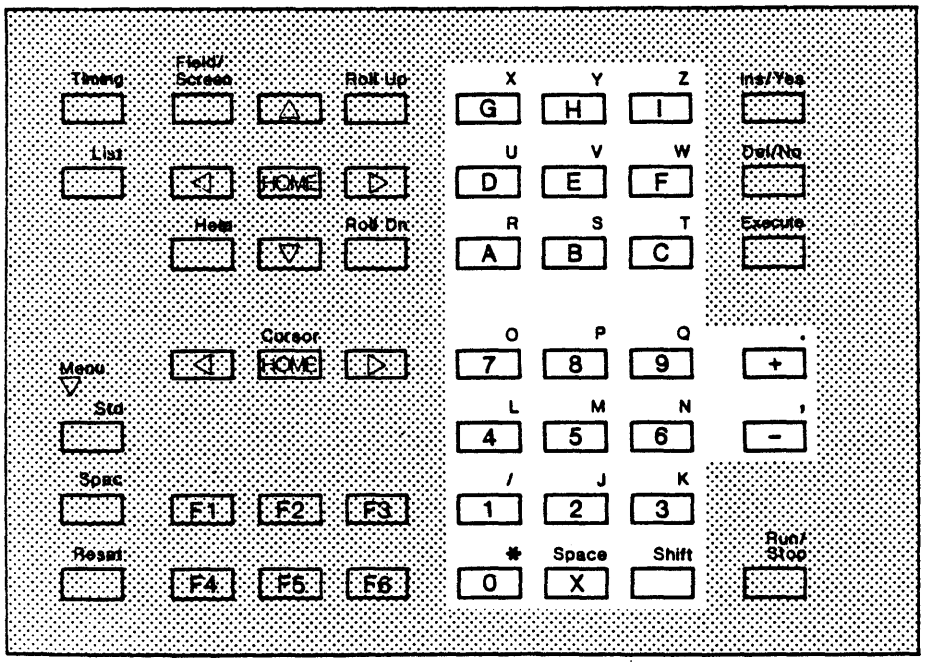

Table 2-4. Insert, Delete, Execute, Run/Stop

Keys	Functions
INS/ YES	Adds memory in the Configuration Menu. Also inserts a new column in the Data List to the right of the column at the cursor. Answers "Yes" in the COPY/FORMAT backup program.
DEL/ NO	Removes columns marked with the blinking parameter cursor from the Data List. Also reduces memory in the Configuration Menu, and affects the Trigger Words and Trigger Sequence Menus. See 4.2 and 4.2 for more information on these menus. Answers "No" in the COPY/FORMAT backup program.
EXECUTE	Performs a search in the Timing Diagram or Data List, a disk read/write in the File Manager, a source to reference transfer, or recording and source comparison in the Compare Menu.
RUN/ STOP	Initiates a new recording from most menus. In the Compare Menu, it executes a one-shot comparison. If you press this key in the middle of a procedure in the Compare Menu, the LA interrupts the comparison at the end of the operation in progress.

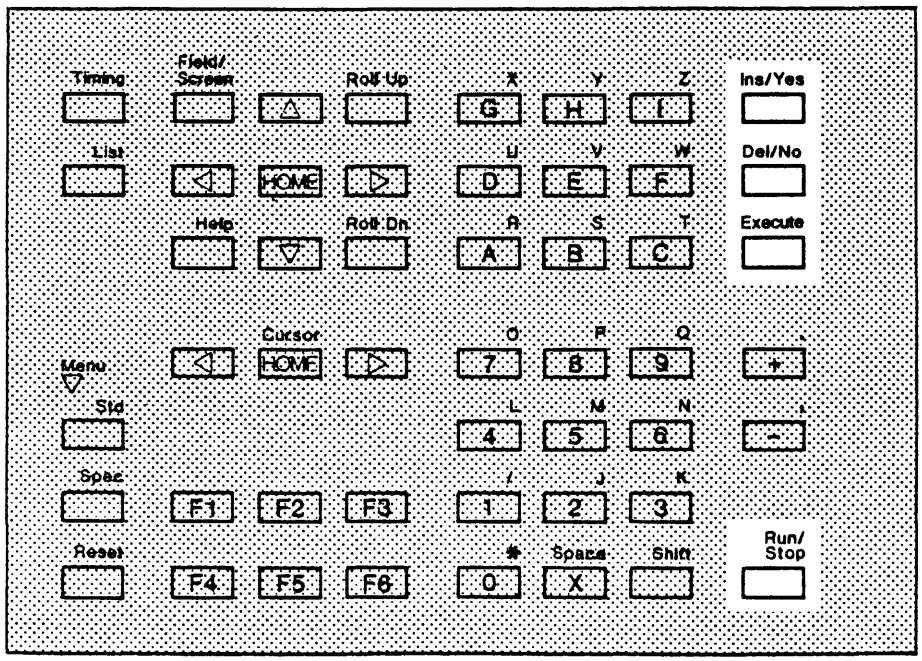

Table 2-5. Function Keys

Keys	Functions
F1	Initiates printout of the menu or display currently on the screen. Can send a test string to a selected parallel or serial interface when pressed in the appropriate field of the I/O Menu. See 6.3 for information on how to print screens.
F2	Displays a Disassembler Menu if that optional software has been identified via the File Manager Menu.
F3	Switches to emulator in LASER operation.
F4	Calls up the Performance Analysis software, if it and the (optional) Time Measurement boards are installed.

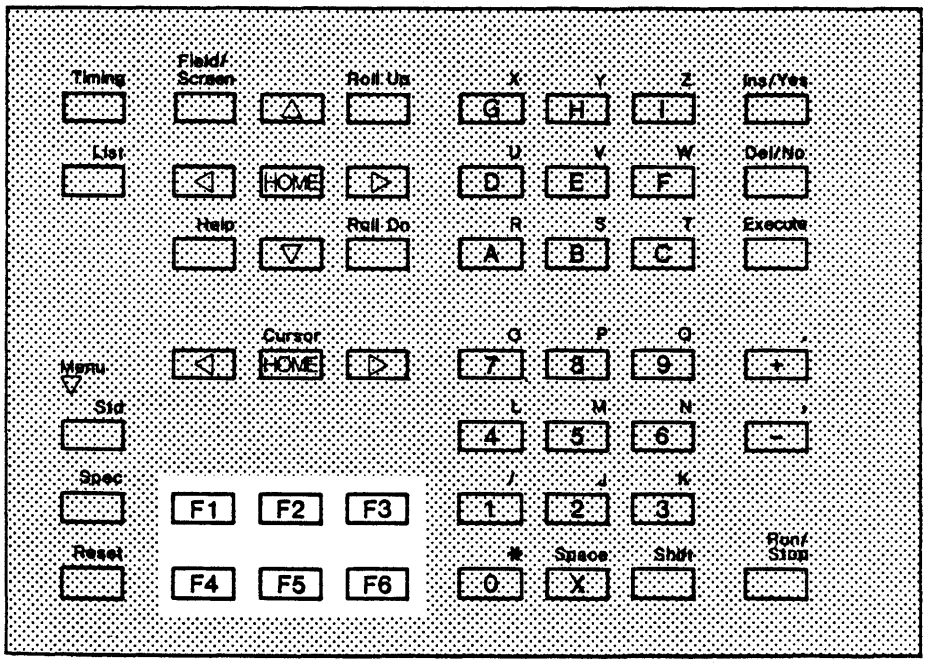

2.5 USING THE LA

To make a recording with the LA, you first need to set up pre-recording parameters in the three Standard Menus. Following the recording, you can examine the recorded data in the Timing Diagram and the Data List. You can also manipulate the recorded data in any of the three Special Menus.

The following paragraphs give a general overview of how to set up the LA to take recordings. This text should not be considered a substitute for the individual, in-depth descriptions of the menus and displays in Chapters 4, 5, and 6.

2.5.1 PRE-RECORDING SETUP

In the three Standard Menus you establish the LA parameters before recording data from the target system. You can store sets of pre-recording conditions for re-use.

2.5.1.1 Configuration Menu

When you first power up the LA, it runs through two self-diagnostic checks, and then displays the Configuration Menu. This menu can be thought of as the "first" menu, because the parameters set here form the foundation for pre-recording conditions.

The Configuration Menu gives you a visual overview of your LA, including the number of channels in your instrument, and the presence of optional boards and probes. In the Configuration Menu, you configure LA hardware and software to suit your target and your recording strategy.

Hardware configuration includes arranging channels, activating glitch recording, setting probe thresholds, choosing the sample rate for the internal clock. This may also include specifying external clocks and defining clock qualifier words.

Channel Arrangement

The Configuration Menu shows the total number of channels in your instrument in one rectangular bar, denoted ARRANGEMENT. You can divide the channel arrangement bar into as many as four blocks, with each block corresponding to 16, 32, 48 or 64 channels. You can assign different thresholds and clocks to each block.

Activating Glitch Recording

Standard recording generally cannot catch glitches that appear asynchronously with the recording clock. For this reason, the LA is designed to trigger on glitches. We define a glitch as more than one signal transition within a sample uperiod.

You can activate glitch recording on odd-numbered probes in the Configuration Menu. This enables data recording on the channels for the odd-numbered probe, and glitch memory storage on channels for the next-highest even-numbered probe.

When you activate glitch mode in the Configuration Menu, you can call up "GLTCH" as a trigger word in the Trigger Sequence Menu ("IF GLTCH IS/GOES TRUE/FALSE). After the recording, the LA displays glitches in both the Timing Diagram and Data List.

Clock Assignment

You can designate a maximum of four "master clocks" in the Configuration Menu. You can choose between the LA's asynchronous, internal clock and/or up to four synchronous, external clocks. Master clock numbers are later called up in the Trigger Words Menu to enable you to assign specific clocks to individual trigger words.

When you select an external clock, you can assign up to six 6-bit qualifier words to enable the LA to use the clock. See 4.1.6 for more information on clock qualifier words.

Software configuration includes setting the size of pre- and post-trigger memory, defining the memory depth, and designating the relative position of the trigger point in acquisition memory.

Setting Memory Depth

You can set the available memory depth and pre-trigger memory size in the Configuration Menu. For the LA, memory depth is the total, potential size of acquisition memory. For example, an LA with an 8K memory depth can capture an 8K recording. However, depending on where you choose to trigger, the actual recording may be less than 8K bytes of data.

The standard LA comes with 2K memory depth. You can double memory depth by installing extra memory boards which add 2K, for a 4K or 8K LA. If you select Interlace operation in the Configuration Menu, you can effectively double the LA's available memory depth, to a maximum of 16K. See 4.1.1 for more information on Interlace operation.

Setting Trigger Point

As a reference point for data recording, the trigger point is always at location +0000. Pre-trigger data has negative locations; post-trigger data has positive locations. After you have set the trigger point in the Configuration Menu, you can further control the trigger point. For example, you can set delays in the Trigger Sequence Menu, and thus increase the amount of time after the LA samples data and triggers.

2.5.1.2 Trigger Words Menu

The Trigger Words Menu is the second of the three Standard Menus. Once you have arranged the hardware and software in the Configuration Menu, you are ready to assign trigger words and mnemonics, and define the channel groups for your recording.

You can assign and display trigger words in hex, binary, octal or decimal. The LA uses trigger words as search words during the trigger sequence, and as qualifier words for Data Qualified Recording. You can assign word numbers or your own mnemonics to as many as 32 trigger words. You later call up these trigger words by entering word numbers or mnemonics in the Trigger Sequence Menu.

In this menu, you can also change the channel groups from the default arrangement (of 8 channel groups in the 64-channel LA, labeled A-H) to an arrangement suited for your application. For example, you can combine two consecutive groups of 8 inputs to examine a 16-bit processor.

If you assigned more than one clock in the Configuration Menu, an additional input field labeled MAS CLK appears in the Trigger Words Menu. You can use this field to assign a different master clock for each trigger word.

The master clock controls the trigger sequence, and its frequency affects the point in time for data sampling. The master clock is also responsible for event counting, and for switching to the next instruction level when user-defined trigger conditions have been fulfilled.

2.5.1.3 Trigger Sequence Menu

The Trigger Sequence Menu is the third and final Standard Menu. In this flexible and sophisticated display, you can define instruction levels, recording mode, and trace conditions.

Instruction Levels

In the Trigger Sequence Menu, you can define up to 14 instruction levels, containing:

- word recognizers
- word true/false
- edge/level triggering
- occurrence counter
- glitch triggering
- time windows
- delays
- conjunctions
- instructions

See 4.4.2 for more details on instruction levels.

Recording Modes

In addition to defining instruction levels, you can choose among three different recording modes, and specify trace conditions on all or selected levels. The three recording modes are Normal, Data Qualified and Transition. Each mode offers a different method of sampling data.

- In Normal Recording, the LA samples all data.
- In Data Qualified Recording, the LA samples only data that agrees with the bits in up to two qualfier words.
- In Transition Recording, the LA samples only data that differs from the previously recorded data by at least one bit.

See 4.4.1.3 for more details about these recording modes.

Trace Conditions

Trace conditions control what sampled data the LA stores in acquisition memory. You can specify trace contions on all or selected instruction levels, in both Normal and Data Qualified Recording modes.

Trigger Monitor

The LA displays the Trigger Monitor immediately after it completes the recording. This screen tracks the LA's progression through each trigger sequence instruction level.

2.5.2 RECORDING

The final instruction you specify in the Trigger Sequence Menu is "trigger". Once you have set up the three Standard Menus, you are ready to make a recording. The LA starts to record when you press the RUN/STOP key, and displays the message "TRIGGER TRACE ACTIVE" during the recording.

As the LA records, it evaluates data captured from your target and "moves" through the various instruction levels you defined in the Trigger Sequence Menu, filling up pre-trigger memory. Depending on the trace conditions you assign to each level, the LA determines which samples are stored in acquisition memory.

After it finds the final trigger condition, the LA triggers and then continues to record until post-trigger memory is filled. In other words, when the LA triggers it stops filling pre-trigger memory and starts filling post-trigger memory. When it has filled post-trigger memory, the LA displays the message "TRIGGER FOUND."

2.5.3 POST-RECORDING DISPLAYS

You can view the captured data in two displays: the Timing Diagram and the Data List. In addition to a visual display of the recording, both screens contain user-modifiable fields that enable you to manipulate the appearance of the screen, so you can optimize your examination of the recording.

Although there is little physical resemblance between the Timing Diagram and the Data List, the two displays are closely linked: both display the same recording, and share input fields and orientation markers. That is, when you change a field or move an orientation marker in one display, the other display reflects the change.

Viewing window and Screen Mode

One portion of both the Timing Diagram and Data List can be thought of as a window that displays a portion of the recording. In the Timing Diagram, this viewing window is at most 2K bits wide and 16 channels high. In the Data List, this viewing window contains a maximum of 8 columns of data, with 15 data words in each column.

You can use SCREEN mode to move the viewing window through the recording. The FIELD/SCREEN key toggles between FIELD and SCREEN modes. In SCREEN mode you can use major cursor keys to scroll horizontally and vertically through the Timing Diagram, or vertically through the Data List. You can use minor cursor keys to move an orientation marker in both the Timing Diagram and Data List.

Source/Reference Memory

You can separately display source or reference memory in both the Timing Diagram and Data List. Source memory is the most recently captured recording; reference memory can be used to compare this recording to earlier recordings. In both displays, you can compare source with reference memory, and transfer the contents of source memory into reference for future examination.

Search Functions

You can execute searches in both the Timing Diagram and Data List. In either display the LA can search for specified words, or for differences between source and reference memory. The Timing Diagram also features a search for transitions; the Data List features a search for any of up to 16 pre-defined trigger words in sequence.

2.5.3.1 Timing Diagram

The Timing Diagram displays the recording in waveform traces. This display is especially useful for visual comparisons of simultaneous signal values. Three user-controllable vertical markers enable you to take measurements between specific locations in the recording.

You can set the user-modifiable fields to control the screen magnification and the number of channels on the screen. You can also name the channels and rearrange or duplicate the channels anywhere in the vertical listing.

2.5.3.2 Data List

The Data List displays the recorded data symbolically, in vertical columns. This display can be helpful for software analysis, because it enables you to report data in user-selectable radices and examine data flow over all channels and the entire memory. You can also produce a hardcopy of the Data List for further examination.

In the Data List you can set the user-modifiable fields to view a column of data in hex, ASCII, EBCDIC, binary, octal or decimal. You can also add or delete columns in order to display the same data in different radices simultaneously.

2.5.4 POST-RECORDING DATA MANIPULATION

You can use the three Special Menus for post-recording manipulation of data.

2.5.4.1 File Manager

You can use the File Manager to save recordings and other data on disk. The LA displays the file name, write-protect status, and file size of all files that are accessible by the CP/M "DIR" command.

In the File Manager you can both store and recall source and reference data. You can also enter two lines of text about your setup in a comments window.

2.5.4.2 Compare Menu

You can use the Compare Menu to set parameters for comparisons between source and reference data (known as "babysitting mode"). The LA can read reference data off a disk from a previous location, or over an interface port in remote control (REMCON) operation.

You can define the segments of recordings for which the LA compares source and reference data. In addition, you can set a comparison tolerance so that data is only considered identical after a pre-determined number of occurrences. When the LA software finds the searched-for condition, it can freeze and interrupt the process, increment a cycle counter, or store the recording to disk.

2.5.4.3 I/O Menu

You can use the I/O menu to control the LA's output ports. These include a serial and a parallel interface for printing the Data List, and RS-232C and (optional) GPIB ports for remote control (REMCON) operation. For the serial printer port B you can set the baud rate, data bits, parity, and stop bits.

CHAPTER 3

GETTING STARTED

In this chapter are instructions for powering up your LA and for running the FORMAT/COPY program to make backup copies of the original system software. Also included are descriptions of the LA's internal diagnostics and the self-test instructions for checking the data probes, clock probes, and the LA's ability to record data.

3.1 POWERING UP

Before you turn on the LA, make sure that the power specified on the back identification plate of the LA matches your power source. If your LA needs to be changed from 110 to 220 (or vice versa), contact your Kontron Service Representative. Steps 1 through 4 describe how to power up the LA.

1. Open the keypad by pulling the top of the panel toward you, as shown in Figure 3-1. Open the disk drives by pulling the levers up. Remove the protective white cardboard from the disk drives.

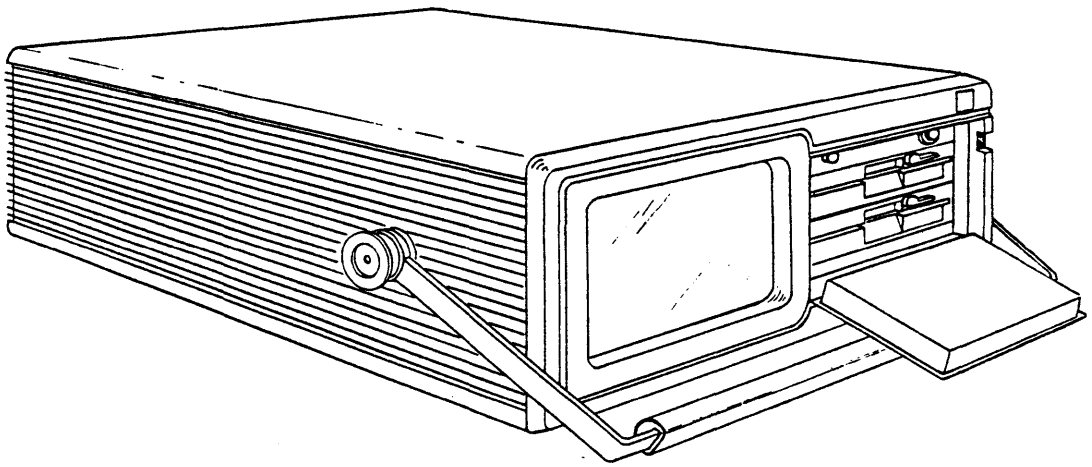

Figure 3-1. LA Disk Access

2. Plug in the power cord and press the green ON/OFF button at the lower right corner on the front of the LA. You should immediately hear the fan motor. If the fan motor does not start up, recheck the power connection, AC power receptacle and the plug. If the fan still does not start up, call your Kontron Service Representative for assistance.

3. After you have powered up the system, insert the FORMAT/COPY Diskette (P/N 2310-6113-01) in drive A (the upper disk drive). Close the disk drive door by slowly pushing the lever down until it stops.

4. Press the system reset button, which is the white button above the disk drives. The FORMAT/COPY program should begin loading a few seconds later. If nothing appears on the screen, call your Kontron Service Representative for assistance.

3.2 MAKING BACKUP DISKS

Before running the FORMAT/COPY program to make backup disks, you should write-protect your original LA operating software disk by covering the write-protect notch. That way, if the operating software disk is mistakenly inserted into the incorrect drive, you cannot reformat and lose this valuable software.

Now that you have powered up the LA, inserted the FORMAT/COPY diskette into drive A, and pressed the reset button, you are ready to make at least one backup copy of the operating software. We recommend that you use a backup copy and store the original disk separately in a safe place.

The FORMAT/COPY program enables you to separately or simultaneously format and copy. We recommend that you format and copy at the same time (the "Both" option), because a backup disk should be freshly formatted.

Following are estimated run times for the FORMAT/COPY program:

Function	Time
FORMAT	1 min.
COPY	1 min.
FORMAT AND COPY	2 min.

(Partially filled disks take less time.)

To make a backup copy of the original LA operating software disk, perform the following steps:

1. Insert a blank disk into drive B. The blank disk must be double-sided, double-density, 98 TPI, 5 1/4".

2. Remove the FORMAT/COPY disk from drive A and insert the write-protected original LA operating software disk into drive A, and close the keypad.

3. Enter your choice of F, C or B, while the screen displays:

   Select Format, Copy, Both (F/C/B):

   We recommend that you enter "B". Press the EXECUTE key after you have entered your selection. You can correct alphanumeric inputs by pressing the left minor cursor key and typing over the incorrect entry.

4. Follow the prompts displayed on the screen.

   ```
   Enter Source Drive Name (A/B):   A
   Enter Destination Drive Name (A/B):  B
   Everything in Place? (Y/N):  Y
   ```

   You can enter "Y" by pressing the INS/YES key, or "N" by pressing the DEL/NO key.

5. While the program is running, the letters R, F, and V are displayed above and below track numbers. These letters represent the read, format and verify operations, respectively, for each track. If you press the RUN/STOP key, the program will abort.

   If you see any read, write, or verify errors on the screen, the disk could be defective. We recommend that you discard any disk you suspect is defective, and start the FORMAT/COPY program again with a new disk.

   To protect your disks, do not turn off the power while a read/write is in progress (i.e., while the red lights on the drives are on).

After the program is complete, the following message is displayed:

```
Job completed successfully.
Format or copy another disk?  (Y/N):
```

If you want to create another backup copy, enter "Y" and insert another blank disk into drive B. If you have finished with the program, enter "N" and remove the original LA operating software disk from drive A. Do not forget to store it in a safe place.

3.3 LA OPERATING SOFTWARE

To boot up the LA system software, insert the copy into drive A, press the white reset button, and close the keypad.

When you boot up the LA operating software, the first display is a status menu showing the software version and a list of the circuit boards and probes that are connected in the LA. This menu stays on the screen for approximately 15 seconds. If a board you believe you should have does not show in this display, call your Kontron Service Representative for assistance. If you have not connected any probes at this point, the status menu will show "No probes connected".

The next display shows the results of a diagnostic check of the installed circuit boards. If any boards do not check out, an error message is displayed; otherwise a verification ("is OK") is displayed. If the LA displays an error message, call your Kontron Service Representative.

After the diagnostic check, the LA automatically displays the Configuration Menu. The default state of this menu corresponds to setup file WSETUP00.WSE. See Chapter 6 for more information on how to change the default setup file. Figure 3-2 shows the Configuration Menu as you can expect to see it.

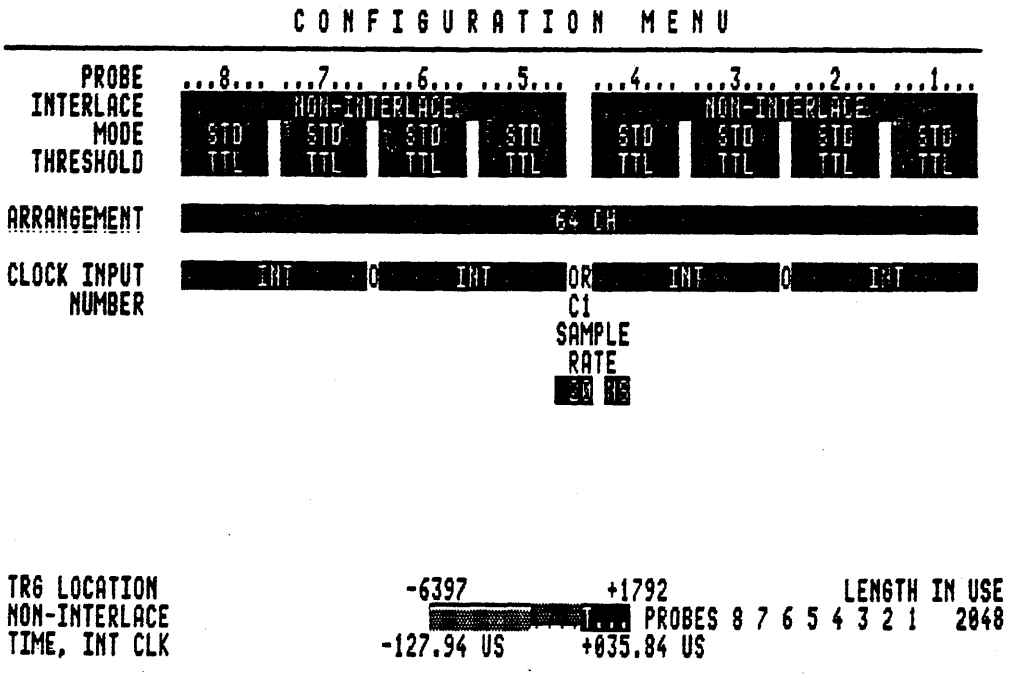

Figure 3-2. Configuration Menu (Default)

3.4 CONNECTING PROBES TO LA BACK PANEL FOR SELF-TEST

When the built-in diagnostics programs are successfully completed and the Configuration Menu is displayed, you are ready to begin the self-test. The self-test facility for the LA has been designed to verify proper operation of the instrument. The LA is designed to operate without user-initiated calibration or adjustments.

For the self-test you will use the Data and Clock Probe Test connectors located on the back panel to check the LA's ability to record data. Each test terminal is a Binary Coded Decimal (BCD) counter. (See 7.1.4.11 for more information on the data and clock test probes.) In addition to checking the equipment, this is an effective way for you to become more familiar with the LA keypad, menus, and displays.

Although they are numbered differently on the outside, all data and both clock probes are functionally identical. The data probes are numbered 1 through 8 (in a 64-channel LA), and the clock probes are labeled J and K. These numbers and letters correspond to the terminology used in the LA software.

The Data Probe Test Terminal is an ECL output, where the Least Significant Bit (LSB) appears at pin 0 and the Most Significant Bit (MSB) appears at pin 7.

The Clock Probe Test Terminal is synchronous with the test output for data probes. The data edges fall approximately 3-4ns after the negative clock edge. Thus, the critical data hold time for synchronous clock recording can be determined. In the Clock Probe Test Terminal, the LSB appear at pins 2 - 7. Pin 2 corresponds to the LSB, and pin 7 to the MSB (at pin 5) of the data test probe BCD counter for connnector 8.

3.4.1 CONNECTIONS FOR THE SELF-TEST

We recommend that the first probe you connect for the self-test is probe 8. This is helpful when you later view the recording in the Timing Diagram, which lists channels in descending order from probe 8 to probe 1. (See Step 5 in 3.4.2 for more information on the Timing Diagram.) When you begin with probe 8, you will see waveform traces in the Timing Diagram without having to scroll through the display.

To conduct the self-test, you need:

- The two flat ribbon cables that were shipped with the LA
- Data probe 8 (or equivalent)
- Clock probe J

Before you begin the self-test, connect probe 8 to the appropriate connector on the LA back panel. Insert one end of the first flat ribbon jumper cable into probe 8 and one end into the Data Probe Test Terminal.

Then connect clock probe J to the appropriate connector on the LA back panel. Insert one end of the second flat ribbon jumper cable into clock probe J and the other end into the Clock Probe Test Terminal.

3.4.2 EXECUTING THE SELF-TEST

Return to the front of the instrument, where the LA displays the Configuration Menu. The blinking cursor should be over the NON-INTERLACE field at the top of the menu. Steps 1 through 8 give instructions for the self-test, using data probe 8 and clock probe J.

1. Move the blinking cursor to a THRESHOLD field by pressing the down arrow key. This field is divided into as many as eight reverse video blocks corresponding to the eight probes. (If you have less than 8 data probes, either 4 or 6 probe blocks will be displayed.) Press the ROLL UP/DOWN keys to change this THRESHOLD field from TTL to ECL. Similarly, use the right cursor key to move the blinking cursor to each additional THRESHOLD field and change each to ECL.

2. Move the blinking cursor down to the CLOCK INPUT NUMBER field, by pressing the right major cursor key to move the cursor to the far right clock field. Select external clock +J0 by pressing the ROLL UP/DOWN keys. The other clock fields will automatically change to OFF.

3. Press the down cursor arrow key to move the cursor to the left side of the menu. Press the ROLL UP/DOWN key to change the J: field from TTL to ECL.

Figure 3-3 shows how the Configuration Menu should now look.

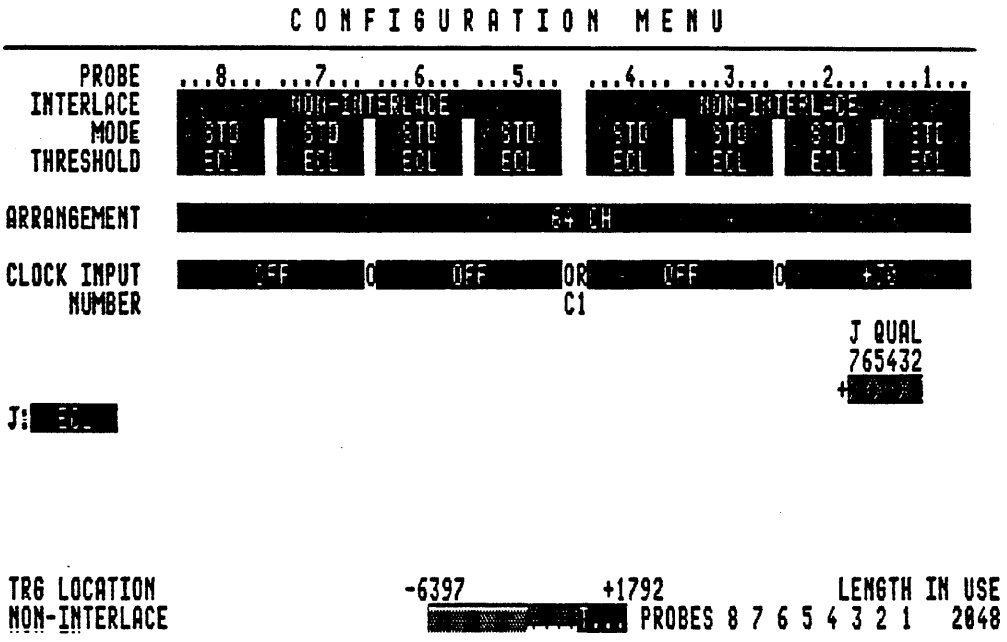

Figure 3-3. Configuration Menu for Self-Test of J Clock

4. Now press the RUN/STOP key in the lower right corner of the keypad to initiate a recording from the BCD counter.

5. Press the white TIMING key in the upper left corner of the keypad. This calls up the Timing Diagram and shows you the data you recorded with probe 8.

   Notice that in its default arrangement, the Timing Diagram lists a maximum of 64 channels (16 per screen) in descending channel number order. This order corresponds to probes 8 through 1.

Because you have connected probe 8, you will see waveform traces on the first 8 lines of the timing diagram. These traces indicate that both the LA memory and the probe are functioning properly. If you do not see traces, check the LA back panel to verify that the probe is properly connected.

See 5-1 for more information about the Timing Diagram.

6. Press the LIST key to examine this test recording in the Data List. Because you have connected probe 8, the BCD counter data is vertically listed in Group A.

   See 5-2 for more information on the Data List.

7. Disconnect probe 8 from the LA and from the jumper cable. Connect probe 7 to the LA and the jumper cable.

8. Repeat Steps 4 - 7 for all of the probes.

   To view data in the Timing Diagram for probes 6 through 1, press the FIELD/SCREEN key once and use the down major cursor arrows to scroll vertically through the display. See Chapter 2 for more information on FIELD and SCREEN modes, and on major and minor cursors.

   Note that in the Data List, the probes correspond to group letters as follows:

   Probe 7 ... Group B
   Probe 6 ... Group C
   Probe 5 ... Group D
   Probe 4 ... Group E
   Probe 3 ... Group F
   Probe 2 ... Group G
   Probe 1 ... Group H

After you have checked all of the data probes with clock probe J connected, you can also check the clock probe K (if you have a 48 or 64-channel LA). Because you have already checked the functionality of all data probes, you only need one probe to check clock probe K.

To check clock probe K, perform the following steps:

1. Connect probe 8. Insert one end of the first flat ribbon jumper cable into probe 8 and the other end into the Data Probe Test Terminal.

2. Connect clock probe K. Insert one end of the second flat ribbon jumper cable into clock probe K and the other end into the Clock Probe Test Terminal.

3. Return to the Configuration Menu by pressing the STD key.

4. Move to the CLOCK INPUT FIELD and press the ROLL DOWN key once over the +J0 external clock setting. This will change the setting to INT.

5. Move the cursor using the left major cursor key and press the ROLL UP/DOWN key until external clock +K0 is displayed.

6. Press the left arrow key to move to the left side of the menu, and change the K: field from TTL to ECL by pressing the ROLL UP/DOWN key.

7. Repeat clock probe J instructions 1 - 8 for clock probe K.

CHAPTER 4

STANDARD MENUS

This chapter describes the three Standard Menus in the LA: the Configuration Menu, Trigger Words Menu, and Trigger Sequence Menu.

4.1 CONFIGURATION MENU

When you first power on the LA, it runs through two diagnostic checks, and then displays the Configuration Menu (Figure 4-1). This menu can be thought of as the "first" menu, because the parameters you set here form the foundation of pre-recording conditions. As shown in Table 4-1, the Configuration Menu displays user-modifiable fields. A separate discussion of each field follows.

Table 4-1. Fields in the Configuration Menu

Field Name	Parameters Set	Choices
INTERLACE	Memory depth and recording speed	2K, 4K, 8K/ 50 MHz 4K, 8K, 16K/100 MHz
MODE	Probe operating mode	STD, OFF, GLTCH
THRESHOLD	Probe logic threshold	TTL, ECL, V1-V4
ARRANGEMENT	Clock inputs to probes	In 16-channel blocks
CLOCK INPUT	Internal/external clocks	INT, K1, K0, J1, J0
SAMPLE RATE	Internal clock rate	10ns - 500ms
J/K QUAL	Clock qualifier words for external clocks	Up to 6, 6-bit words
TRG LOCATION (bar)	Trigger point within recorded memory	Increments of 256, to a maximum of 3840 post-trigger locations
INS/DEL key	Memory depth	256, 512, 1024, 2048, 4096, 8192, depending on hardware

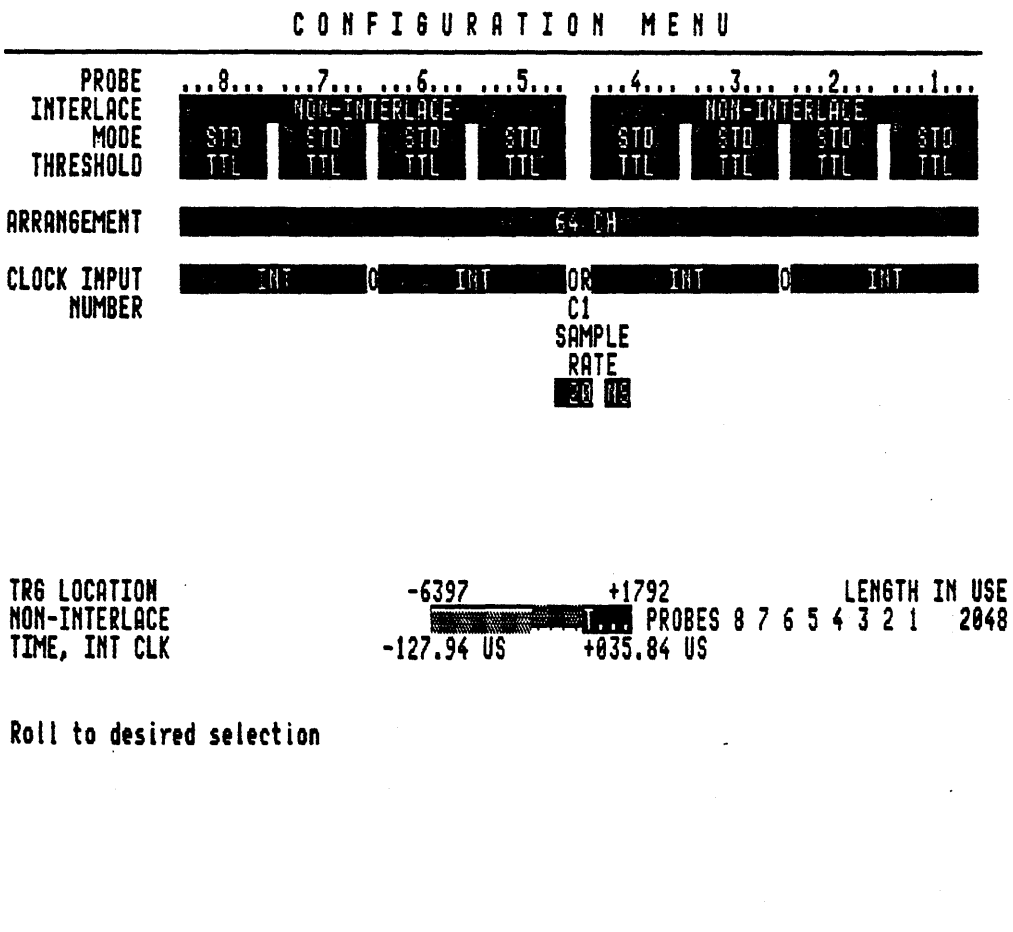

Figure 4-1. Configuration Menu

4.1.1 NON-INTERLACE/INTERLACE OPERATION

In this field, you can set the memory depth and recording speed by pressing the ROLL UP/DOWN keys to select Non-Interlace or Interlace operation. See 2.5.1.1 for more information on memory depth.

Non-Interlace operation offers 2K, 4K or 8K memory depth and up to 50 MHz recording speed over 16 channels per installed memory board. In Non-Interlace operation, you can record with the LA's internal clock or up to four external clocks. See 4.1.5 for more information on clock selection.

Interlace operation offers 4K, 8K or 16K memory depth and up to 100 MHz recording speed over 8 channels. In other words, Interlace operation doubles the memory depth and recording speed, while it halves the number of channels by turning all even-numbered probes off. You must record with the LA's internal clock in Interlace operation. See 4.1.5 for more information on clock selection.

The optional high-speed board offers recording speed of 500 MHz.

The memory depth of the standard LA is 2K. The memory depth of a standard LA can be expanded to 4K; the memory depth of a 4K LA can be expanded to 8K.

If you select Interlace operation for probes 5 to 8, you must record the Non-Interlace probes 1 to 4 with a separate, external clock.

NOTE: When switching from Interlace to Non-Interlace operation, certain input fields (e.g., switched-off probe groupings) may remain in Interlace until you take a recording with the RUN/STOP key.

4.1.2 PROBE OPERATING MODES

In this field, you can can select one of three operating modes for each probe by pressing the ROLL UP/DOWN keys. The available operating modes are Standard (STD), OFF, and Glitch (GLTCH).

For the LA, a glitch is defined as more than one signal transition within a sample period. The LA can trigger on glitches when you activate glitch recording on the odd-numbered probes. This enables data recording on the odd-numbered probe memory and glitch memory storage on the next highest even-numbered probe. Because Interlace operation turns all even-numbered probes off, you cannot activate glitch recording in Interlace operation.

4.1.3 THRESHOLD VOLTAGE

You can set the threshold voltage for each data probe by pressing the ROLL UP/DOWN keys. You can choose between four user-definable thresholds: V1+00.0 - V4+00.0 (+12.7V to -12.7V in 100 mV increments). Because TTL and ECL are standard thresholds, you can roll to these settings directly, rather than inputting their specific voltages. To enter threshold values other than "TTL" and "ECL", use the minor cursor keys and alphanumeric keypad.

When you select an external clock (K1, K0, J1, J0), you can choose from the same group of thresholds in a separate field at the lower left portion of the menu. See 4.1.5 for more information on external clocks.

4.1.4 CHANNEL ARRANGEMENT

You can arrange the 16-channel blocks of the LA in groups of 1 to 4, depending on the total number of channels in your instrument. To divide channels, press the ROLL UP/DOWN key until the LA displays your desired arrangement. After dividing the channels into separate groups, you can assign the same or different clocks, recording modes and thresholds to each group.

You can select one of the following arrangements in the 64-channel LA:

64
48 - 16
32 - 32
32 - 16 - 16
16 - 16 - 16 - 16
16 - 16 - 32
16 - 48

If you reduce the total number of channels by turning some probes off, the remaining eight channels can become a single group of eight. This group cannot be divided into two groups of four.

When you arrange a 64-channel LA in Interlace operation over all eight probes, you cannot divide the resulting 32-channel group into two groups of 16.

4.1.5 CLOCK INPUT

Depending upon how you divide the channels in ARRANGEMENT field, you can choose up to four sample clocks (C1-C4) by pressing the ROLL UP/DOWN keys. You can select an internal, external, or a combination of several OR-connected external clocks.

The OR connection is shown as O or OR between the clock groups in this field. The list below shows the clock inputs assigned to each set of probes:

```
Clock Input K1   for   Probes 8 and 7
Clock Input K0   for   Probes 6 and 5
Clock Input J1   for   Probes 4 and 3
Clock Input J0   for   Probes 2 and 1
```

You can use the external clocks' positive edge, negative edge, or both for sampling; you can also turn the clock input off. When you select an external clock, a separate clock qualifier input field appears. See 4.1.6 for more information on the clock qualifier word input field.

You can assign a maximum of four "master clocks" in the Configuration Menu. These clock numbers (C1 - C4) are later called up in the Trigger Words Menu as "MAS CLK" numbers. See 4.2.5 and 2.5.1.2 for more information on master clocks in the Trigger Words Menu.

4.1.6 CLOCK QUALIFIER WORDS (K QUAL OR J QUAL)

You can select up to six ORed clock qualifier words (6 bits wide) for each of the four external clocks. Each bit of the qualifier word is AND connected, meaning that all bits must be true in order to enable the clock. The bits are defined as:

```
1 =  true high
0 =  true low
X =  don't care
```

Before you enter a clock qualifier word, the input field is XXXXXX. Additional clock qualifier input fields automatically appear only after you enter data in one line, and move down with the major cursor arrow key. If you enter less than six qualifier words, the last word will be XXXXXX.

Clock qualifier words match the sampling edge you select for the external clock. When you choose the positive clock edge for sampling, the clock qualifier words will also be sampled on the positive edge. For positive clock edge sampling on the K clock, the LA displays the following:

```
+K0

KQUAL
765432
+XXXXXX
```

For positive and negative sampling on the K clock, the LA displays two clock qualifier fields, as follows:

±K0

KQUAL
765432
+XXXXXX
-XXXXXX

Clock qualifier words are an effective method of data reduction, because the LA will only record what you're interested in (i.e., data on valid bus cycles.)

The same qualifier inputs are used to qualify both J clocks, and both K clocks. You can define up to 24 different clock qualifier words, as follows:

K1/K0	qualified via K2...K7 (probe K pin 2...pin 7)
J1/J0	qualified via J2...J7 (probe J pin 2...pin 7)

4.1.7 SAMPLE RATE

As shown in Table 4-2, in Non-Interlace operation, you can set the sample rate of the internal clock's sample rate from 20ns to 500ms. In Interlace operation, the internal clock's sample rate is fixed at 10ns.

Table 4-2. Sample Rates

Sample Rate	Units	Operation
20	ns, us or ms	Non-Interlace
50	ns, us or ms	Non-Interlace
100	ns, us or ms	Non-Interlace
200	ns, us or ms	Non-Interlace
500	ns, us or ms	Non-Interlace
10	ns	Interlace

4.1.8 TRG (TRIGGER) LOCATION

This bar can be used to set the recording memory size and the relative trigger position within that memory. With this you can specify the amount of pre- and post-trigger data. See 2.5.1.1 for more information on pre- and post-trigger data.

4.1.8.1 To Set Recording Memory Length

The Insert (INS) key widens the available memory size to the maximum allowed by the hardware; the Delete (DEL) key reduces the available memory size. See Table 4-3 for a listing of possible memory sizes.

Unavailable memory is displayed in shaded- rather than reverse-video. To see the total memory size in your LA, press the INS key several times until the maximum amount of reverse-video is displayed.

In Non-Interlace operation, the maximum pre-trigger is 4096; in Interlace operation, the maximum pre-trigger is 12538.

To reflect the longer memory length of Interlace Mode, a second memory bar is automatically displayed. The trigger point is linked to the same location (0000) for Interlace and Non-Interlace operations.

If the maximum available memory length is not needed, we recommend the length is reduced to allow faster screen updates and more storage space on disk. We also recommend that you turn off unused probes in the MODE field of the Configuration Menu. Reducing required RAM can be advantageous, especially when combining a Kontron Logic Analyzer with a Kontron Emulator (LASER configuration).

You must limit the used memory size before recording, because data is stored during recording on the disk according to the memory size that was selected earlier.

Table 4-3. Possible Memory Sizes
(in bits per channel)

Non-Interlace	Interlace
256 = .25K	512 = .50K
512 = .50K	1024 = 1K
1024 = 1K	2048 = 2K
2048 = 2K	4096 = 4K
* 4096 = 4K	* 8192 = 8K
* 8192 = 8K	* 16384 = 16K
* Only possible with 8K memory option	

4.1.8.2 To Define Trigger Position within Memory

The main reference point for data recording with a logic analyzer is the trigger point; therefore, the trigger is always assigned to location 0000. See 2.5.1.1 for more information on the trigger point. Pre-trigger data has negative locations; post-trigger data has positive locations.

By moving the "T" along the bar with the left and right minor cursor keys, you can set the trigger position within the acquisition memory, in increments of 256 bits. Note that the total memory size is selected by using the INS and DEL keys.

In Non-Interlace operation, you can move the "T" from the end of memory (where post-trigger data equals 0) to within 253 bits of the beginning of memory (where post-trigger data equals a maximum of 3840 memory locations). An easy way to fill all of post-trigger memory is to move the "T" as far left as it can go, using the left minor cursor key.

If the number of samples occurring before the LA finds the trigger condition is less than the selected pre-trigger memory, this memory will not be completely filled. Therefore, to ensure that the memory is filled with recorded data, you can insert a delay in the first level of the Trigger Sequence Menu, equal to the size of pre-trigger memory. The LA will then sample and store the number of times specified by the delay setting. See 4.4.2.8 for more information on how to use delays in the Trigger Sequence Menu.

Figure 4-2 shows how pre-and post-trigger memory are filled in the Configuration Menu.

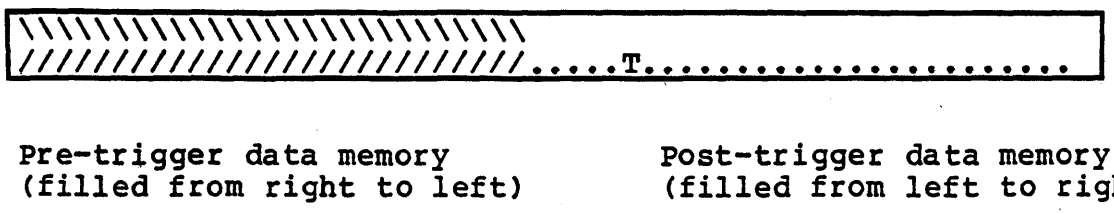

Figure 4-2. Trigger Location Bar in Configuration Menu

4.2 TRIGGER WORDS MENU

The Trigger Words Menu (Figure 4-3) is the second of the three Standard Menus. You can access this menu by pressing the STD key when the Configuration Menu is displayed.

In this menu, you can arrange the inputs into channel groups and assign up to 32 trigger words and mnemonics for later use in the Trigger Sequence Menu. You can assign and display trigger words in hex, binary, octal or decimal.

Table 4-4 lists all fields in the Trigger Words Menu and gives a brief description of each. A separate discussion of each field follows.

Table 4-4. Fields in the Trigger Words Menu

Field Name	Parameters Set	Choices
GROUPS	Inputs arranged into channel groups	Up to 8 channel groups
POLARITY	Group polarity	+ or -
RADIX	Group radix	Hex, binary, octal, decimal
WRD1	Word mnemonics for up to 32 trigger words	5 characters each, starting with letter
MAS CLK *	Recording clock for trigger words (* if you specify more than one clock in the Configuration Menu)	C1-C4, INT

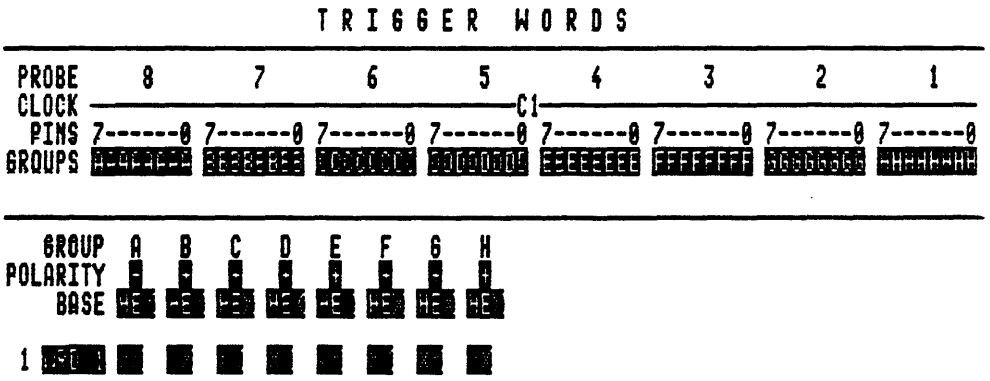

Figure 4-3. Trigger Words Menu

The Trigger Words Menu is affected by the following settings in the Configuration Menu:

- When you turn off probes in the Configuration Menu, they automatically appear as OFF in the Trigger Words Menu.
- When you set the odd-numbered probes to GLITCH in the Configuration Menu, the even-numbered neighboring probes are turned off to allow glitch memory storage. Even-numbered probes are marked GLITCH in the Trigger Words Menu.
- When you specify more than one (ORed) clock input in the Configuration Menu, the MAS CLK field appears in the Trigger Words Menu. See 4.2.5 for more information on master clocks.

4.2.1 INPUT GROUPS

Each probe contains eight inputs. In the GROUPS field, you can divide these inputs into channel groups, labeled A-H for the 64-channel LA. Until you enter a different letter, the input groups are arranged as shown in Figure 4-4.

However, you are not limited to the default arrangement. For example, you can assign the same letter to probes 8 and 7 if you want to treat them as one logical group for a 16-bit address field.

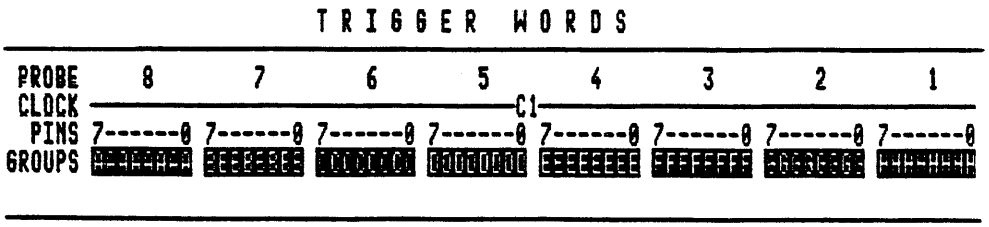

Figure 4-4. Default Input Group Arrangement

Note the following when redefining input groups:

- You can only assign one letter to each group of eight physical pins. When you enter two different letters in the same group, the second letter automatically becomes "X" (don't care).
- The maximum number of consecutive inputs for one letter (A-H) is 16.
- You must define inputs that are sampled with different clocks as separate groups.
- The "X" key next to the Shift key represents "don't care" in a channel group, meaning that group will be deleted for both trigger word assignment and from the Data List display. However, you can enter the letter "X" (Shift-G) in Trigger Word mnemonics.
- The Most Significant Bit (MSB) is on the left side of the input group.

4.2.2 POLARITY

You can set the polarity of each channel group to + or - by pressing the ROLL UP/DOWN keys or entering the symbols from the alphanumeric keypad. Thus, you can easily represent positive or negative logic groups, instead of having to invert negative data.

4.2.3 RADIX

You can select hex, binary, octal or decimal radices for data input and display by pressing the ROLL UP/DOWN keys. You cannot enter ASCII and EBCDIC numbers in this field; however, you can later call up these radices in the Data List display.

4.2.4 MNEMONICS

You can define up to 32 trigger words, using either word numbers or your own mnemonics. User-selected mnemonics can contain a maximum of five characters. You must begin all mnemonics with a letter; the other four positions can contain letters, numbers or spaces.

If you assign word numbers rather than mnemonics, the following word will automatically assume the next highest number. When you later call up trigger words in the Trigger Sequence Menu, you can simply enter the word number without entering the prefix letters "WRD".

The Trigger Words Menu displays 11 words at a time. To scroll through more than 11 words, press the FIELD/SCREEN key once to activate SCREEN mode. Use the major cursor keys to scroll through the list. To enter new trigger words, press the FIELD/SCREEN key again to return to FIELD mode. See 2.5.3 for more information on FIELD and SCREEN modes.

4.2.5 MASTER CLOCK (MAS CLK)

The MAS CLK field only appears if you have chosen to record data with several independent clocks in the Configuration Menu. If you have divided the available channels into different clock groups in the ARRANGEMENT field of the Configuration Menu, you can assign a different master clock to each trigger word in the Trigger Words Menu.

When you specify a clock (i.e., INT, C1-C4) in the MAS CLK field, the channel groups associated with that clock are highlighted in reverse-video. All channel groups that cannot be recorded with the selected clock appear in ordinary (i.e., non-reverse) video. You cannot input data in these non-reverse video fields.

See 2.5.1.2 for more information on Master Clocks.

4.3 TRIGGER SEQUENCE MENU

The Trigger Sequence Menu (Figure 4-5) is the third and final Standard Menu. In this flexible and sophisticated screen, you can define the recording mode and create series of instruction levels to establish a trigger sequence. Once you have defined the trigger sequence, you can take a recording by pressing the RUN/STOP key, and then examine the results in the Timing Diagram or Data List.

A trigger sequence is a series of instruction levels that contain a unique combination of conditions. You assign these conditions to define under what circumstances the LA should record the event word in that instruction level. You call up event words by entering the word numbers or mnemonics you defined in the Trigger Words Menu.

Note that you can configure the LA to trigger on both glitches and combinations of glitches and data patterns. See 4.5 for information on glitch triggering.

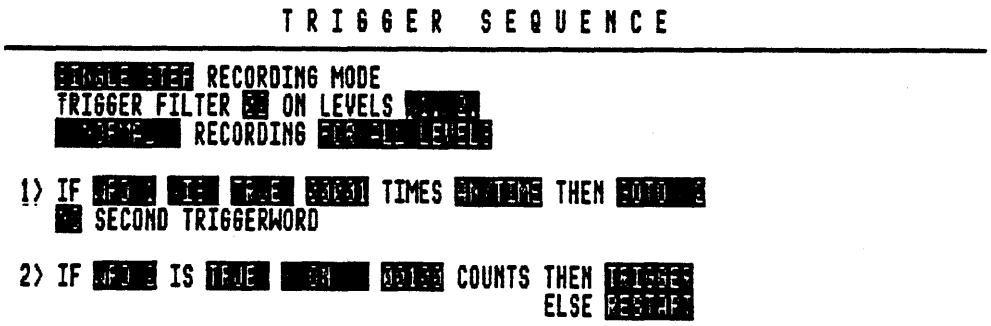

Figure 4-5. Trigger Sequence Menu

By defining conditions, you can control the exact segments of the data stream the LA should record before it triggers. As the LA moves through the various instruction levels, it fills up pre-trigger memory. Once the final trigger condition is met, the LA triggers, and then continues to record until post-trigger memory is filled.

The LA displays the Trigger Monitor (see 4.7) after it completes the recording. This screen resembles the Trigger Sequence Menu, except that it also shows the number of occurrences of the entire trigger sequence. The Trigger Monitor tracks the LA's progression through each instruction level.

4.3.1 TRIGGER SEQUENCE CONDITIONS OVERVIEW

Table 4-5 summarizes the LA's trigger sequence conditions. See 4.4.2 for a more detailed discussion.

Table 4-5. Trigger Sequence Conditions

WORD RECOGNIZERS (2 per level)

- counters to determine how long a word IS true or false
- counters to determine how long a word GOES true or false
- word filters to guarantee triggering on stable data

TIME WINDOWS (1 per level)

- word occurs BEFORE n clocks
- word occurs AFTER n clocks
- word occurs BETWEEN n and m clocks
- word occurs ON n counts
- word occurs ANYTIME
- DELAY n counts before word search

WORD CONDITIONS (2 per level)

- IF WORD X... ELSE ...
- IF WORD X... BUT...

INSTRUCTIONS (2 per level)

- TRIGGER
- RESTART
- GO TO <level>

Other trigger sequence conditions are described below.

4.3.1.1 Triggering on Non-Events

In analyzing software, the non-occurrence of expected events is often the only criteria by which to define errors. You can configure the LA to trigger on non-events (i.e., IF WRD1 IS FALSE) by specifying the correct program behavior and by instructing the LA to trigger on any deviation from that program. This feature is known as NOT triggering.

4.3.1.2 Triggering on Glitches

Glitch triggering is an important feature of the LA. A glitch is an asynchronous noise spike; this can totally disrupt a system. However, many glitches are not troublesome because they occur at times that render them harmless. Glitch triggering isolates faults by triggering on the troublesome glitches, rather than on all glitches.

You can configure the LA to trigger on just those glitches occurring on a single input line or one of several inputs, inside a specified time window, or when a specified pattern is present on other channels not in Glitch mode. See 4.5 for more information on glitch triggering.

4.3.2 RELATIONSHIP BETWEEN TRIGGER SEQUENCE MENU AND OTHER MENUS

Several parameters in the Configuration and Trigger Words Menus directly affect the Trigger Sequence Menu. The following sub-sections discuss these parameters.

4.3.2.1 Setting the Trigger Point

In the recording, the trigger point always appears at location +0000. However, you can set the relative position of the trigger point in the Configuration Menu, as discussed in 4.1.8.2 and thereby control the amount of pre- and post-trigger data.

You can also specify delays in the Trigger Sequence Menu to further control the location of the trigger point in the recording. Delays can increase the amount of time after an event in which the LA will sample data. (For further information on delays, see 4.4.2.8.)

4.3.2.2 Master Clocks

If you assign more than one master clock in the Configuration Menu, you can assign a separate master clock to each trigger word in the Trigger Words Menu. When you specify a word number or mnemonic in the Trigger Sequence Menu, the LA will sample that word using the appropriate master clock.

4.4 MENU STRUCTURE

As shown in Figure 4-6, the Trigger Sequence Menu is divided into two interrelated parts: an upper portion and a lower portion. By changing certain parameters in the upper portion (e.g., recording mode), you simultaneously alter related fields in the lower portion.

In the upper portion, you define the triggering environment by setting the recording mode, trigger filter, and trace/recording conditions. In the lower portion, you can assign the logical conditions for up to 14 instruction levels.

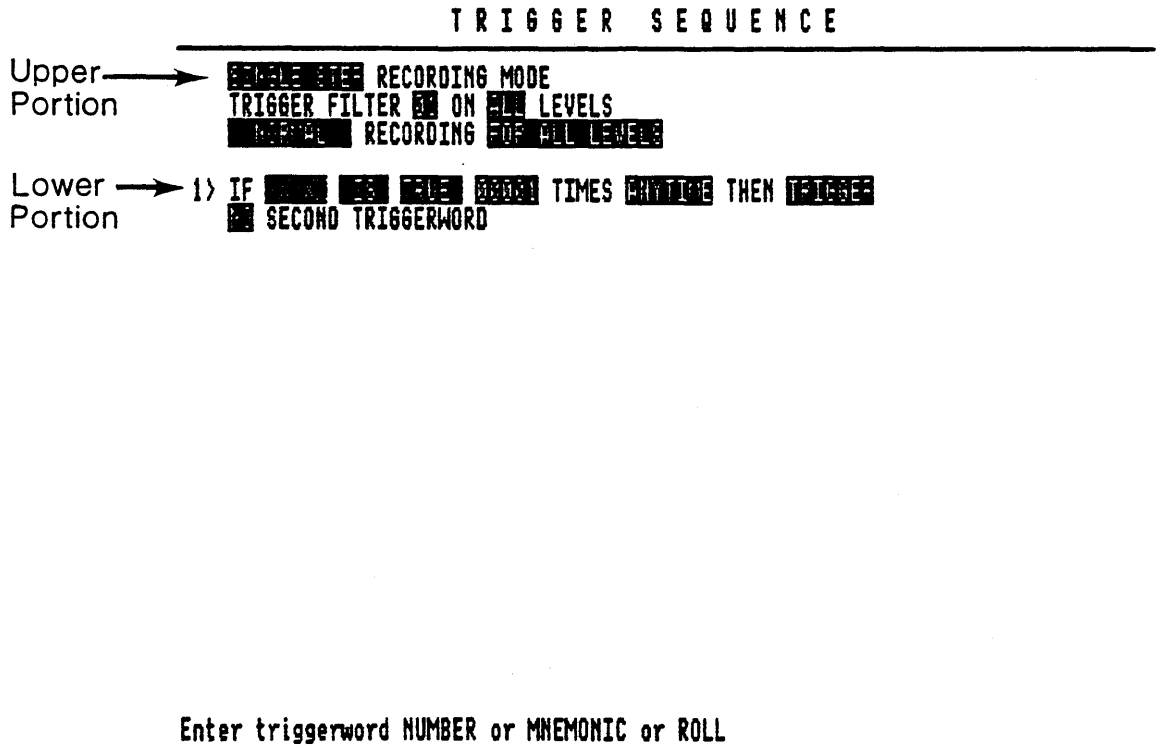

Figure 4-6. Upper and Lower Portion of Trigger Sequence Menu

4.4.1 UPPER PORTION OF MENU

In the upper portion of the Trigger Sequence Menu, you set the triggering environment. Here you can define the parameters listed below by pressing the ROLL UP/DOWN keys when the cursor is over the appropriate field.

Table 4-6 lists the user-definable fields in the upper portion of the Trigger Sequence Menu. A separate discussion of each field follows.

Table 4-6. Fields in the Triggger Sequence Menu

Field Name	Parameters Set	Choices
# of RECORDINGS	Number of consecutive recordings	1 (Single Step) to 65535 (Auto-Repeat)
TRIGGER FILTER	Number of clock cycles event word must be present to be recorded	00 to 15 (on all or selected instruction levels)
RECORDING MODE	Trace conditions for all or selected instruction levels	Normal, Data Qualified, Transition

4.4.1.1 Number of Recordings

In this field, you can set the number of consecutive recordings from 1 (SINGLE STEP) to 65535 (AUTO-REPEAT).

In SINGLE STEP recording mode, the LA makes one recording and stops. In AUTO-REPEAT Recording, you can select both the number of recordings (from 00001 to 65535) and the time between recordings (0 to 99 seconds).

4.4.1.2 Trigger Filter

The trigger filter specifies the number of clock cycles in which an event word must be present in order to be valid, so that the LA triggers on stable data. You can set the trigger filter from 00 to 15 on all or selected levels.

When the LA records with an asynchronous clock, such as the LA internal clock, target system transitions or glitches may resemble trigger conditions. Unless you have specified glitch triggering, you do not want to trigger on such invalid events. You activate the trigger filter to prevent triggering on glitches and random, intermittent noise.

When you activate the trigger filter, the LA considers event word to be "found" the specified number of times, only when it occurs between an occurrence and non-occurrence. (A non-occurrence is one sample where the word is not found.)

When you turn the trigger filter off (by setting it to 00), the LA does not have to see a non-occurrence of the word in order to consider that word found.

If you press the ROLL UP/DOWN key when the blinking cursor is over the ALL LEVELS field on the trigger filter line, you can turn the trigger filter off on specific instruction levels. To do this, move the cursor by pressing the minor cursor keys and enter "X" for any level you do not want the LA to filter.

As shown below, the maximum value for the trigger filter is limited by the time windows you prescribe for each instruction level. See 4.4.2.7 for more information on time windows.

BEFORE m COUNTS	maximum value = m
BETWEEN m and n COUNTS	maximum value = n-m
ON m COUNTS	maximum value = 1

4.4.1.3 Recording Modes

The LA features three possible recording modes:

- Normal
- Data Qualified
- Transition

With Normal and Data Qualified Recording, you can instruct the LA to trace or not trace data on ALL instruction levels or on SELECTED instruction levels. In Transition Recording, the LA always traces data on ALL instruction levels.

NORMAL RECORDING

In Normal Recording, the LA traces all data while it searches for event words. When you select NORMAL RECORDING ON ALL LEVELS, the LA fills one source memory location for each cycle of the sample clock.

As shown below, when you select NORMAL RECORDING ON LEVEL SELECTED, you can access a third line in the instruction level to set the following trace conditions for that instruction level: TRACE ALL DATA, TRACE NO DATA.

```
NORMAL RECORDING LEVEL SELECTED

<1> IF WRD1 IS TRUE 00001 TIMES ANYTIME THEN GOTO <2>
    BUT IF WRD1 IS FALSE THEN TRIGGER
    TRACE ALL DATA IN LEVEL 1
```

DATA QUALIFIED RECORDING

In Data Qualified Recording, the LA only records data that matches all bits of up to two qualifier words, except where you have entered "X" (don't care) for specific bits of the event word in the Trigger Words Menu. In effect, Data Qualified Recording allows you to use masking, so that the LA only records what is significant to you.

In Data Qualified Recording, you can call up qualifier words by entering the same word numbers or mnemonics you defined in the Trigger Words Menu.

The following trace selections are available with Data Qualified Recording:

- Trace all data at this instruction level
- Trace no data at this instruction level
- Trace if 1 or 2 words true (ORed) - record only words 1 and 2
- Trace if 1 or 2 words false (ORed) - record everything BUT words 1 and 2

If you choose Data Qualified Recording on ALL LEVELS, you can enter up to two qualifier words for the entire trigger sequence. These word input fields appear at the top of the menu above instrution level <1>.

If you choose Data Qualified Recording on LEVELS SELECTED, you can enter up to two qualifier words in separate input fields for each instruction level.

Note that you cannot use Data Qualified Recording:

- When you have assigned two external clocks in the Configuration Menu
- In Glitch or Interlace Modes (see 4.1.2 and 4.1.1, respectively)

The Trigger Point in Data Qualified Recording

When you set up the LA to trace qualifier words and trigger in the same instruction level, the trigger point may not be exactly at location +0000, if the event word does not match the qualifier word. In Data Qualified Recording, the LA is set up to record only when it sees the qualifier word.

Following a trigger in Data Qualified Recording, the LA starts to record at the next appearance of the qualifier word after the trigger. This situation is different from Normal Recording, in which the LA triggers and then fills up post-trigger memory.

Clocks for Data Qualified Recording

The maximum clock rate for Data Qualified Recording is 25 MHz. You can use Data Qualified Recording with an internal or external clock in Non-Interlace Mode with a maximum sample speed of 40ns (because 40ns = 25 MHz).

Note that the LA can sample data with every active clock edge you define in the Configuration Menu (see 4.1). You can select either the rising edge, falling edge or both.

Measure Time/Count Clock Fields (with TM option only)

If the optional Time Measurement board is installed, an additional input field appears when you select Data Qualified Recording. The Time Measurement board enables the LA to store the point in time when it detects an event word. This time information can be stored in absolute time units with 10ns resolution (MEASURE TIME field) or in cycles of the master clock M1 (in the COUNT CLOCKS field). If you have selected more than one clock in the Configuration Menu, the LA will only count the clock associated with probes 1 and 2.

TRANSITION RECORDING

In Transition Recording, the LA only stores data if it differs from the previously recorded data by at least one bit. The smallest possible interval between two separately recorded data transitions is 20ns, the speed of the Transition Mode's internal clock.

Every logic state change (no matter what its duration) occupies only one memory location. The optional Time Measurement board measures and separately stores time information associated with level changes. The recording memory can accommodate up to 8192 state changes. In Transition Recording, data transitions occurring over a period of minutes, hours or even days can be examined with high resolution.

Transition Recording is especially useful when the optional Time Measurement board is installed. This is often the best recording mode for time-domain analysis when you need high resolution (for fast data sequences), and when there are pauses in the data stream. Some of the uses for Transition Recording include disk interfaces and data communication between computers.

Note that you cannot use Transition Recording:

- When you have assigned two master clocks in the Configuration Menu
- In Glitch or Interlace Modes (see 4.1.2 and 4.1.1, respectively)

4.4.2 LOWER PORTION OF MENU

You can assign a unique combination of conditions for each 2- or 3-line instruction level in the Trigger Sequence Menu. The maximum number of instruction levels is 14, with one word recognizer and one final instruction per level. As you increase the complexity and number of conditions in each instruction level, the total number of available levels is reduced. See 4.4.2.1 for more information on the maximum and minimum number of instruction levels.

When you first call up the Trigger Sequence Menu, the LA displays the following default instruction level:

```
<1> IF XXXXX IS TRUE 00001 TIMES ANYTIME, THEN TRIGGER
    NO SECOND TRIGGERWORD
```

As shown below, each reverse-video block corresponds to a specific condition for that instruction level. Table 4-7 summarizes the available conditions, and the number of maximum number of conditions per instruction level.

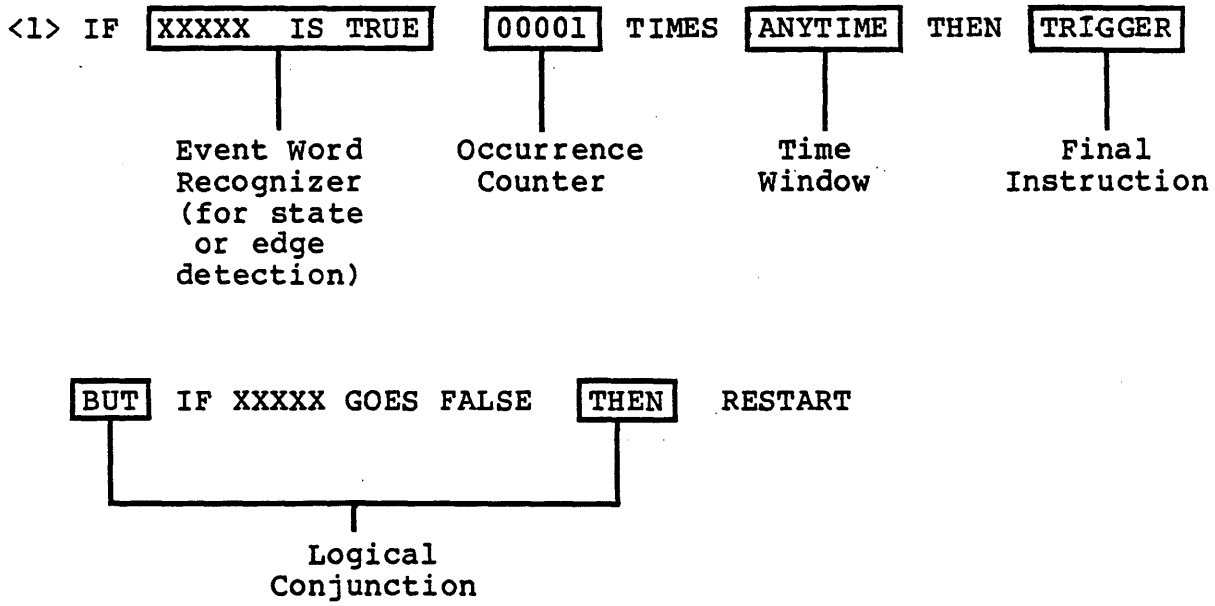

Table 4-7. Instruction Level Conditions

EVENT WORD RECOGNIZERS (2 per level)

- counters to determine how long a word IS true or false (state triggering)
- counters to determine how long a word GOES true or false (edge triggering)

OCCURRENCE COUNTER/TIME WINDOWS (1 per level)

- word occurs BEFORE n clocks
- word occurs AFTER n clocks
- word occurs BETWEEN n and m clocks
- word occurs ON n counts
- word occurs ANYTIME
- DELAY n counts before word search

LOGICAL CONJUNCTIONS (2 per level)

- IF WRD1... THEN/ELSE (TRIGGER, RESTART, GOTO <2>)
- BUT IF WRD2... THEN/ELSE (TRIGGER, RESTART, GOTO <3>)

FINAL INSTRUCTIONS (2 per level)

- TRIGGER
- RESTART
- GO TO <level>

TRACE MODE (1 per level in LEVEL SELECTED Recording)

- See 4.4.1.3 for information on recording modes.

4.4.2.1 Maximum/Minimum Number of Instruction Levels

The maximum number of instruction levels is 14, with one word recognizer and one final instruction per level. For example:

```
IF WRD3 GOES TRUE 10000 TIMES ANYTIME THEN TRIGGER
NO SECOND TRIGGERWORD
```

You can create a minumum of five fully loaded instruction levels. If your instruction levels contain the maximum number of conditions, and you want to revise an existing level, you must first "make room" for the change by removing a condition from one level in the sequence.

4.4.2.2 Changing Number of Instruction Levels

To display additional instruction levels for input, press the ROLL UP/DOWN keys when the cursor is over the GO TO setting in the Instruction field. The LA can display six instruction levels per screen. To scroll down, press the FIELD/SCREEN key to activate SCREEN mode, and press the major cursor keys.

To reset an instruction level to its default state (before user-modification), press the DEL key while the blinking cursor is over the instruction (TRIGGER, RESTART, GOTO) field. This automatically resets the instruction level to your default. Note that you can define the instruction level default and then store this setting in the File Manager. See 6.1 for more information on the File Manager.

If your trigger sequence features sequential jump instructions (e.g., GOTO 2 followed by GOTO 3), press the DEL key while the blinking cursor is over the instruction field to reset that instruction level and delete the following level.

If your trigger sequence features non-sequential jump instructions (e.g., GOTO 2 followed by GOTO 5), press the DEL key while the blinking cursor is over the instruction field to reset that instruction level and not delete any others.

4.4.2.3 Event Words

You define event words in the Trigger Words Menu, and call them up by word number or user-defined mnemonic in the Trigger Sequence Menu. You can enter up to two event words per instruction level, depending on your selection of time windows and recording mode. (See 4.4.2.7 for more information on time windows; see 4.4.1.3 for more information on recording modes.)

When you refer to the event word by number, its corresponding mnenomic appears on the screen. If you have not assigned a mnemonic, the default mnemonic WRD 1...WRD 32 appears.

If you assign the same final instruction (e.g., RESTART, TRIGGER) to two different event words in one instruction level, the LA ORs them together. That is, finding either event word fulfills the condition.

You cannot use two event words that are recorded with different master clocks in one instruction level.

4.4.2.4 Event Word Recognizers

You can set the following event word recognizer conditions in each instruction level:

- True/false
- State/edge

You can also set an occurrence counter for each event word. This enables the LA to determine how long the event word IS TRUE/FALSE or GOES TRUE/FALSE. See 4.4.2.6 for more information on the occurrence counter.

In addition, you can configure the LA to trigger on glitches and combinations of glitches and data patterns. See 4.5 for more information on glitch triggering.

4.4.2.5 State/Edge Triggering (IS/GOES TRUE/FALSE)

You can choose between state triggering (IS TRUE, IS FALSE) and edge triggering (GOES TRUE, GOES FALSE) for each instruction level.

In state triggering, the instruction level is satisfied if the event word is true or false. It does not matter whether the word was already true or false before that instruction level. The occurrence counter counts the number of master clock cycles in which the word is true/false.

In edge triggering, a condition is satisfied only if the selected word becomes true or goes false. In the case of GOES TRUE, at least one sample must be found where the trigger word is not present for the word to be considered valid. In the case of GOES FALSE, at least one sample must be found where the event word is present before the word's absence causes the LA to record data on that instruction level. Use edge triggering for hardware analysis in measuring the time between handshake signals as a trigger criteria.

In state triggering, when you set the time windows to AFTER n COUNTS and BETWEEN n and m COUNTS, the nth clock interval is counted. In edge triggering it is not, because the nth clock is used to determine if the word was not true in the case of GOES TRUE, or if it was true in the case of GOES FALSE.

Therefore, you cannot set time windows in edge triggering to trigger ON n COUNTS. If the trigger condition is that the desired word is not yet present at clock (n-1) and only appears at the nth clock, use GOES TRUE BETWEEN (n-1) and n COUNTS. (The same applies to GOES FALSE.)

4.4.2.6 Occurrence Counter (.....TIMES)

You can set the occurrence counter to specify the number of times (from 00001 to 65535) the LA must find the event word in order to satisfy that instruction level. In state triggering, the occurrence counter specifies how long (cumulatively) an event word IS TRUE or IS FALSE. In edge triggering, the occurrence counter specifies the number of times an event word GOES TRUE or GOES FALSE.

If you have activated the trigger filter (see 4.4.1.2), the LA considers the event word found only when it is not detected for at least one valid sample clock after the last time it was found. If you have turned the trigger filter off, the LA does not need to see a non-occurrence of the event word between samples, as every clock cycle where the word appears is counted as one occurrence. A word that appears in several successive clock cycles is considered found in each cycle.

It is useful to set the occurrence counter when working with an event word that appears once, but continues over several clock periods. (Thus, it satisfies a trigger condition only once, regardless of how many times it is sampled in successive clock cycles.)

Note that you can only use the occurrence counter in the ANYTIME, BEFORE m COUNTS and AFTER m COUNTS time windows (not in BETWEEN or ON).

In the example in Figure 4-7, the fifth occurrence of the event word indicates an error, so the LA is set up to trigger. Note that the LA will not trigger on any of the first four occurrences of the event word, since you want WRD1 to appear four times.

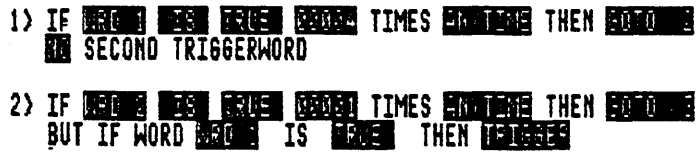

Figure 4-7. Example of Occurrence Counter

4.4.2.7 Time Windows

Time windows define the boundaries in which the LA must find an event word in order to satisfy that given instruction level. The LA features two kinds of time windows: open and closed. The following sections discuss the choices available in open and closed time windows.

Time windows are set in units of the recording clock, and can be useful:

- When the same word sequence occurs in several locations in a program, but only one is at the desired trigger location.
- When the LA is set up to trigger if a signal is late or early.

OPEN TIME WINDOWS

Open Time Windows can poll two events simultaneously. The following choices are available:

ANYTIME	Search begins immediately and continues until word is recognized.
AFTER m COUNTS	Search begins after m counts and continues until word is recognized.

CLOSED TIME WINDOWS

Closed Time Windows poll one event word. The following choices are available:

ON m COUNTS	Search only takes place during mth count of the recording clock. To execute, word must be recognized exactly at that time.
BEFORE m COUNTS	Search until word is recognized or count is reached.
BETWEEN m AND n COUNTS	Search begins with the mth count and ends with the nth count. To execute, word must be recognized within the time window. Note that a search for n<m is also valid.

4.4.2.8 Delay

You can assign a delay to any instruction level, from 00001 to 65535 master clock cycles. The delay time is based on the master clock for that level. If more than one clock is used, the LA automatically defaults to C1 as the master clock.

4.4.2.9 Logical Conjunctions

The Trigger Sequence Menu features two types of logical conjunctions: IF...THEN/ELSE and BUT IF...THEN/ELSE.

You can use the IF...THEN/ELSE conjunction with the BEFORE, BETWEEN and ON time windows. The three possible ELSE conditions are TRIGGER, RESTART or GOTO <level>. Note that you can only use this conjunction to poll single event words.

You can use the BUT IF... THEN/ELSE conjunction with the ANYTIME and AFTER time windows. This conjunction enables you to enter two event words in one instruction level. Note that you cannot specify time windows for the second event word in the instruction level.

4.4.2.10 Final Instructions in Each Level

You can choose one of three instructions in each hardware level:

- TRIGGER -- When the preceding condition is met, the LA triggers and fills post-trigger memory.
- RESTART -- The LA jumps to first instruction level (i.e., level <1>).
- GOTO -- The LA jumps to any specified instruction level.

Note that when you use the BEFORE, BETWEEN or ON time windows with the IF...ELSE conjunction, you can specify two instructions in one level. For example:

```
<1> IF WORD 3 GOES TRUE BEFORE 10000 COUNTS THEN TRIGGER
                                                ELSE RESTART
```

4.5 GLITCH TRIGGERING

Glitch triggering (on all or selected channels) is activated when the odd-numbered probes in the Configuration Menu are set to GLTCH. This enables data recording on the odd-numbered probe memory and glitch memory storage on the next highest even-numbered probe. Note that glitch triggering is not possible in Interlace Mode or with Data Qualified or Transition Recording.

4.5.1 GLITCH TRIGGERING OVER ALL GLITCH CHANNELS

You can configure the LA to search for glitches on any channel by:

- Setting the odd-numbered probes to GLTCH in the Configuration Menu.
- Rolling to GLTCH in the event word input field in the Trigger Sequence Menu.

This configuration creates an ORing arrangement, where any glitch on any selected channel will cause the LA to trigger.

To trigger when no glitches appear on any channel in a specified instruction level, use state triggering (IF GLITCH IS FALSE) in the Trigger Sequence Menu. To trigger when a glitch occurs and then goes false on any channel in a specified hardware level, use edge triggering (IF GLTCH GOES FALSE) in the Trigger Sequence Menu.

4.5.2 GLITCH TRIGGERING OVER SELECTED CHANNELS

You can configure the LA to search for glitches on selected channels by defining a specific glitch word in the glitch memory channel group in the Trigger Words Menu, and entering that word number or mnemonic in the Trigger Sequence Menu.

You can use the channels of the even (switched-off) probes to specify the glitch trigger words by the following characters:

0 = no glitch
1 = glitch
X = don't care

These channels correspond directly to the next lower channel group, which is doing the actual recording.

You can use ANDing with the logical conjunction IF .... IS/GOES TRUE. You can use ORing with the logical conjunction IF ... IS/GOES FALSE.

In the example of ORing below, the event word is in group A (probe 8), which contains glitch memory. Group B (probe 7) contains data memory. You will notice a delay of 00003 counts in the first instruction level. This is to prevent the LA from mistaking the first few data transitions for glitches.

	Glitch A + BIN	Data B + HEX
WRD1	XXX0XX00	XX

The Trigger Sequence Menu would read:

<1> DELAY 00003 COUNTS, THEN GOTO <2>

<2> IF WRD1 IS FALSE 00001 TIMES ANYTIME, THEN TRIGGER
NO SECOND TRIGGERWORD

4.5.3 COMBINED GLITCH/PATTERN TRIGGERING

The setup for combined glitch/pattern triggering is the same as for glitch triggering on selected channels. You can define both glitch and data event words in the Trigger Sequence Menu. You can define a data word on any probe, whether it is set for glitch detection or not.

Using IS/GOES TRUE for selected channels in the Trigger Sequence Menu, and positive logic to define trigger words for glitches (in the even-numbered probe) results in an ANDing condition for glitch and data words. (See example below.)

Using IS/GOES FALSE in the Trigger Sequence Menu, and negative logic to define the glitch and data trigger word results in an ORing condition over all channels for the trigger word.

4.5.3.1 Example of ANDing

	Glitch		Data	
	A + BIN	B + HEX	A + HEX	B + HEX
WRD1	XX1XX1X	00	00	00

The Trigger Sequence Menu would read:

<1> DELAY 00003 COUNTS, THEN GOTO <2>

<2> IF WRD1 IS TRUE 00001 TIMES ANYTIME, THEN TRIGGER

4.6 TRIGGER DELAY ACTIVE MESSAGE

After you have configured the Trigger Sequence Menu, you are ready to make a recording by pressing the RUN/STOP key. The LA displays the message "TRIGGER TRACE ACTIVE" during the recording.

As the LA records, it evaluates data captured from your target and "moves" through the various instruction levels you defined, filling up pre-trigger memory. Depending on the trace conditions you specify for each instruction level, the LA determines which samples it should store in acquisition memory.

After it finds the final trigger condition, the LA triggers and then continues to record until post-trigger memory is filled. In other words, when the LA triggers, it stops filling pre-trigger memory and starts filling post-trigger memory. When it has filled post-trigger memory, it displays the message "TRIGGER FOUND".

If you do not want the LA to record any post-trigger data, you can choose LEVEL SELECTED recording in Normal or Data Qualified modes, and set the instruction level that has the TRIGGER command to TRACE NO DATA. This will instruct the LA **not** to fill up post-trigger memory after the trigger.

KEYBOARD BREAK

You can interrupt the "TRIGGER DELAY ACTIVE" message, and thus interrupt the recording, by pressing the RUN/STOP key. This stops the LA from attempting to sample and freezes the recording, even if post-trigger memory is not filled.

4.7 TRIGGER MONITOR

The Trigger Monitor is a separate screen that displays a pass counter to track the LA's progression through each instruction level. If the LA gets "stuck" at a particular level, you can use the Trigger Monitor to see exactly on what level it did not record.

The Trigger Monitor appears automatically if you press the RUN/STOP key when the Trigger Sequence Menu is displayed.

The Trigger Monitor disappears and is replaced by the Trigger Sequence Menu when you press the:

- ROLL UP/DOWN keys after a recording
- Major or minor cursor HOME key

The number of times an instruction level is passed through is maintained by software registers. If the level is at the output long enough, it will be displayed in the Trigger Monitor. However, if the CPU samples the output of the register and "misses" a report of a level, the software register for that level will not be updated. That is, sometimes the display can be too slow to catch the LA's progression through each instruction level.

You can see additional instruction levels in the Trigger Monitor by using the up and down major cursor arrows in SCREEN mode. If you have more instruction levels than can fit on one screen, the Trigger Monitor automatically displays the higher number instruction levels first.

```
        TRIGGER FILTER 05 ON LEVELS XX.XX.  3.XX
        NORMAL RECORDING
*       01 PASSES          00005 OCCURENCES FOUND
    <1> IF LD7 IS TRUE 00007 TIMES ANYTIME WITH CLOCK C2 THEN
        GOTO <2> BUT IF WRD  3 IS TRUE THEN RESTART
*       01 PASSES
    <2> IF IN23 GOES TRUE BEFORE 01000 COUNTS CLOCK M2 THEN
        GOTO <3>
                                                ELSE RESTART

*       00 PASSES
    <3> IF OUT54 IS TRUE 00001 TIMES ANYTIME WITH CLOCK INT THEN
        GOTO <4>
        NO SECOND TRIGGERWORD

*       00 PASSES
    <4> IF GLTCH IS TRUE 00001 TIMES ANYTIME WITH CLOCK INT, THEN TRIGGER
        NO SECOND TRIGGERWORD
```

This counter resets each time control is returned to this level. It is hardware controlled and is accurate in displaying # of counts.

Pass counters indicate the number of times a particular level has been active and is never reset, except at a start of a recording.

* = Highlighted in Trigger Monitor

CHAPTER 5

DISPLAYS

This chapter provides a description of the standard displays of recorded data: the Timing Diagram and the Data List.

5.1 TIMING DIAGRAM

The Timing Diagram shown below in Figure 5-1 displays recorded data as waveforms. The recording can include as many as 8K bytes (for Non-Interlace operation) or 16K bytes (for Interlace operation). You specify the actual size of pre- and post-trigger memory in the Configuration Menu. See 4.1.8.1 for more information on this portion of Configuration Menu.

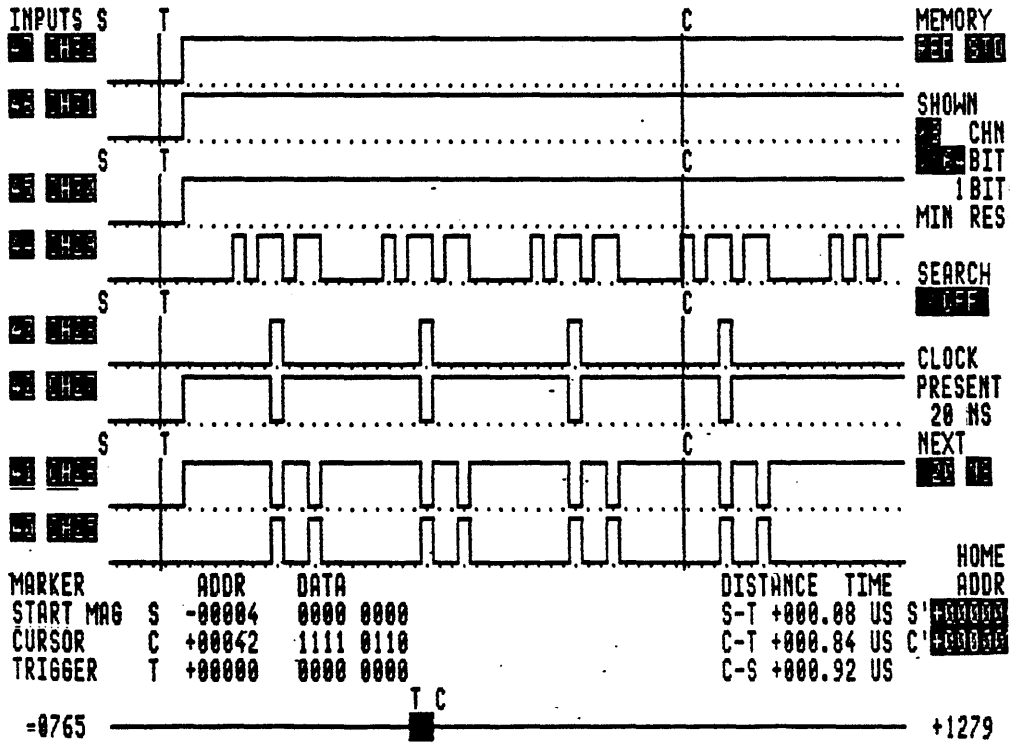

Figure 5-1. Timing Diagram

The display on the screen is a user-controllable "window" that represents data corresponding to 2K (2048 bit) wide and 8 or 16 channels high. You can alter the display in this window by directly setting the number of vertically listed channels, and/or by selecting a screen magnification value. You can also specify a particular channel by name, and display channels in any order. Section 5.1.1 describes the various methods of manipulating the viewing window.

There are several ways to move through the recorded data, viewing it one segment at a time. These include horizontal and vertical scrolling, jumping to specific locations, and "paging" through the display in units of the selected magnification power. You can mark your present position in the recording via the three orientation markers, and via the reverse-video orientation bar at the bottom of the Timing Diagram. A readout at the bottom of the screen displays the locations and data corresponding to the three orientation markers. Section 5.1.2 describes these ways of moving through the recorded data.

Following a recording and your manipulation of the displayed segment, you can choose to display source memory (the default), reference memory, or an exclusive OR comparison of source and reference. You can also transfer the contents of source memory into reference for later examination. In addition, you can initiate searches for particular words, for transitions, or differences between source and reference memory. Section 5.1.3 describes these methods of data manipulation.

You cannot view in the Timing Display any channel that you have switched to OFF in the Configuration Menu. Note that channels recorded with different clocks (external and internal) cannot be displayed in the same time scale.

If you select both Interlace and Non-Interlace operation in the Configuration Menu, the LA can display both channel groups in the Timing Diagram. However, this will not be a real-time display, because Interlace and Non-Interlace channels are recorded at different sample rates. That is, simultaneous events do not appear in the same memory locations and therefore are not aligned in the Timing Diagram, except at the trigger point.

In addition to Timing Diagram traces, this screen includes user-modifiable fields that enable you to manipulate the displayed data in the Timing Diagram. These fields, and the parameters you can control from them, are listed below in Table 5-1.

Table 5-1. Fields in the Timing Display

Field Name	Parameters Set	Choices
INPUTS	Channel number	x7 - x0 for each probe
	Channel name	CHxx - CHxx or user-assigned name
MEMORY	Displayed segment	Source, reference or comparison
SHOWN	Number of displayed channels	8 or 16
BIT	Screen magnification	64, 128, 256, 512, 1024, 2048 bits
SEARCH	Search criterion	Word, transition or difference between source and reference memory
PRESENT CLOCK	Internal clock rate	10ns - 500ms
NEXT CLOCK	Matches setting for present clock after recording	10ns - 500ms
S-HOME	Location for S-marker jump	Any location in the recording *
C-HOME	Location for C-marker jump	Any location in the recording *

* Resets to maximum or minimum when you enter a value out of range.

5.1.1 MANIPULATING THE DISPLAY

You can manipulate the Timing Diagram display by:

- Setting the number of displayed channels (vertical)
- Rearranging channels
- Renaming channels
- Setting the screen magnification (horizontal)

Setting Number of Displayed Channels

The Timing Diagram can display a maximum of 16 channels per screen, and this is the usual condition. You can halve the number of displayed channels from 16 to 8 by pressing the ROLL UP/DOWN key in the CHN (Channel) field. When you change the CHN field from 16 to 8, the LA displays the upper 8 channels from the present 16.

In its default arrangement, the LA lists two-digit channel numbers in descending order from highest to lowest, along the left side of the Timing Diagram. The first digit represents the probe number; the second digit represents the input pin number (e.g., channel 81 corresponds to probe 8 pin 1).

Rearranging and Renaming Channels

In addition to controlling the number of displayed channels, you can rearrange the channels in any order and assign your own channel names. You can call up the trace associated with one channel in several different locations, simply by reentering the channel number or name.

To resequence channels, you can enter a different channel number over the displayed channel number field. The LA automatically shows the trace associated with that channel number after you enter the second digit. The LA will not accept an invalid number nor any letter as the second digit.

To rename channels, you can enter either a default number or a user-assigned name. The default numbers are CH64 - CH00 for the 64-channel LA. The LA automatically displays the trace associated with that channel name after you enter the last digit. You can assign a channel name simply by typing the new name over the existing name. You must follow the same rules for assigning channel names as for defining trigger words mnemonics. See 4.2.4 for more information on trigger word mnemonics.

Field Between Channel Number and Mnemonic

Depending on whether you record with the internal or external clock, a space, "X" or "T" or "C" appears between the channel number and name fields.

A space indicates that you are using the internal clock. In this situation, the LA computes times rather than measuring them.

An "X" indicates that you are using an external clock without the optional Time Measurement board. In this situation, there is no correlation between the time information at the bottom of the Timing Diagram and the displayed waveforms.

A "T" indicates that the optional Time Measurement board is installed, and an external clock is assigned to board DMB0. This means that displayed times are measured, rather than computed. We define computed time as the LA multiplying the number of samples by the value of the internal clock. With an external clock, the LA counts the number of samples to compute the distance between markers.

A "C" indicates that the optional Time Measurement board has been set to "count clocks" in Data Qualified Recording, in the Trigger Sequence Menu (see 4.4.1.3).

5.1.1.1 Manipulating Horizontal Display

The Timing Diagram can display a maximum of 2K (2048 bits) for each channel across the screen. You can control the screen magnification by setting the desired value of each raster point in the BIT field.

The raster points form a dotted line beneath the data for each channel. The distance between raster points represents the minimum space in which the LA can represent data transitions as traces. As shown in Figure 5-2, if the selected magnification is so small that more than one data transition falls within a raster unit, the LA will display data as shaded regions rather than distinct traces.

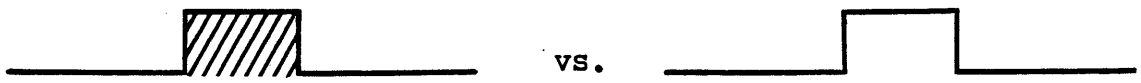

Figure 5-2. Shaded vs. Waveform Trace

Table 5-2 lists the raster point value for all BIT field settings. This table also shows the alternative numbers you can enter to set the screen magnification. You can enter these numbers in any field in SCREEN mode, or in the MEMORY, CHN, and SEARCH fields in FIELD mode.

Table 5-2. Bit Resolution in the Timing Diagram

Display Magnification (Bits)	Direct Alphanumeric Keypad Input	Bits per Raster Point
16 Channel Display		
* 128	3	1
512	2	4
1024	1	8
2048	0	16
8 Channel Display		
* 64	3	1
256	2	4
1024	1	16
2048	0	32

* In both the 64- and 128-bit displays, one raster point equals one memory location, but in the 64-bit display, the raster points are more widely spaced.

5.1.1.2 Glitch Display

As indicated in the discussion of the Configuration Menu (4.1), glitch recording can be activated on odd-numbered probes. This enables data recording on the odd-numbered probe memory, and glitch memory storage on the next highest even-numbered probe.

In the Timing Diagram, glitch memory channels display glitch data exclusively, and data channels display glitches as half-height markers within the data channels.

When you set the CHN field to 16 and press "G" on the alphanumeric keypad, you can remove glitch information from the data channels. When you press "G" again, you restore glitch information to these channels.

5.1.2 MOVING THROUGH DISPLAY

In addition to manipulating the vertical and horizontal positioning of the Timing Diagram "window", you can laterally move through the entire recording in several ways. The reverse-video orientation bar at the bottom of the Timing Diagram shows the relative position of the displayed segment within the entire recording.

5.1.2.1 Orientation Lines

The Timing Diagram features three user-controlled, vertical orientation lines: the S-, C- and T- markers. In the following paragraphs, each marker is separately discussed.

As you move laterally through the display, you can examine the readout at the bottom of the screen to see the markers' memory locations, and the distance between each marker pair. You can then use this information to measure distances between locations of significance to you. See 5.1.2.2 for more information on the Timing Diagram readout.

S-Marker

The S-marker marks the first displayed memory location (also called "start of magnification"). This line remains at the far left edge of the Timing Diagram display, unless a 2048-bit recording is displayed at 2048-bit resolution. In this case, the S-marker appears as a distinct vertical line.

When you change the screen magnification (see 5.1.1.2), the location of the S-marker remains the same, so you can use it as a point of reference.

C-Marker

The C-marker is an orientation cursor to help you read displayed data at particular locations. You can also use this marker and the readout at the bottom of the screen to determine distances between any locations and the S- or T-markers. See 5.1.2.2 for information on how to move the C-marker.

T-Marker

The T-marker appears at the trigger point, which is always designated location +0000. You define the position of the trigger point within memory in the Configuration Menu. The location of the T-marker does not change until you initiate a new recording by pressing the RUN/STOP key.

5.1.2.2 How to Scroll in Screen Mode

You can move laterally through the Timing Diagram to view different segments of the recording. To move through the display you must first activate SCREEN mode by presssing the FIELD/SCREEN key once. The FIELD/SCREEN key toggles between the two modes. When you press it again, the blinking cursor returns, which indicates that you are in back in FIELD mode.

When have activated SCREEN mode, you can use the four major cursor keys to scroll through the recording as follows: left and right arrow keys to scroll horizontally, up and down arrow keys to scroll vertically.

You can use the two minor cursor keys to move the C-marker through the recording. When the C-marker reaches either edge of the screen, you can continue to scroll with these cursor keys.

5.1.2.3 Readout Below Timing Diagram

The readout at the bottom of the Timing Diagram displays the locations and data between each pair of the three vertical markers. Bits at the far left relate to the top channels; bits at the far right relate to the bottom channels for all three markers.

In effect, this readout is a "Mini Data List", because it gives a binary display of the data at the S-, C- and T-markers. See 5.2 for more information on the Data List.

Memory Addresses S-, C- and T-Markers

The left half of the readout displays the locations and data corresponding to the S-, C- and T-markers. As shown in Figure 5-3, the first 2 bytes refer to the upper channel and the second 2 bytes refer to the lower channel in the 16-channel display.

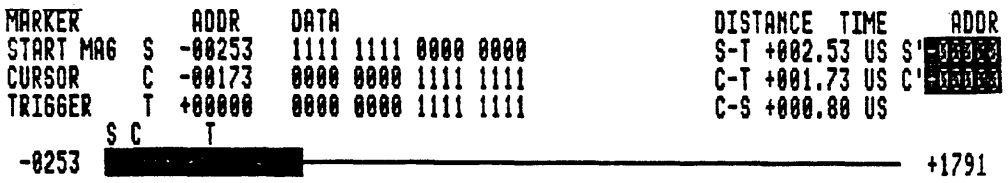

Figure 5-3. Memory Addresses for S-, C- and T-markers

Time Distances Readout

If you record with the internal clock, the readout displays time distances. If you record with an external clock, the readout displays the number of samples between markers, rather than the time distances. If the optional Time Measurement board is installed, this readout can display the time value for samples recorded with an external clock.

5.1.2.4 Jumping through the Recording

In addition to scrolling laterally through the recording to find a particular location, you can use one of the methods discussed in the following subsections. These FIELD mode methods are alternatives to using the cursor keys in SCREEN mode, with which you can scroll through the recording one location at a time.

S-HOME, C-HOME

In the S-HOME field you can enter an S-marker location to "jump" to; in the C-HOME field you can enter a C-marker location to "jump" to. When you enter a location in the appropriate field and press the major cursor HOME key for the S-marker, or the minor cursor HOME key for the C-marker, the LA jumps to the new location and "remembers" the previous location. When you press the appropriate HOME key again, the markers return to their previous location.

The S-marker remains at the far left edge of the display. The C-marker may seem to disappear if you instruct the LA to jump outside the window in which it was displayed.

NOTE: To jump to the beginning of pre-trigger memory, enter -9999 in the S- or C-HOME fields. The LA will automatically display the exact location in the S- or C-HOME fields. You can then press the appropriate HOME key to jump to the the beginning of pre-trigger memory.

To jump to the end of post-trigger memory, enter +9999 in the S- or C-HOME fields. The LA will automatically display the exact location in the S- or C-HOME fields. You can then press the appropriate HOME key to jump to the end of post-trigger memory.

5.1.2.5 Moving the Orientation Bar

The reverse-video orientation bar at the bottom of the Timing Display shows the relative position of the displayed segment within the entire recording. As an accelerated method of "paging" through the Timing Diagram, you can move the orientation bar in multiples of the selected magnification. To do this, move the cursor to the orientation bar in FIELD mode, and press the left or right major cursor keys.

5.1.3 MANIPULATING MEMORY IN DISPLAY

In the Timing Diagram, three fields enable you to manipulate the display memory: MEMORY, SEARCH, and NEXT CLOCK. You can use these fields to compare the recording to a previous recording, to search for particular events or transitions in the recording, or to prepare for another recording at a different internal clock speed.

5.1.3.1 Memory Field

The MEMORY field enables you to work with and save recorded data after the recording. The following display choices are available:

- Source (SOURCE)
- Reference (REFRNCE)
- Source and reference compare (S XOR R)
- Source to reference transfer (S --> R)

Source and Reference

Source memory is defined as the most recently captured data that has been captured on one of the memory boards. You can transfer and store this data in reference memory, and then store the recording to disk. Source memory cannot be loaded into the LA from a disk, but it can be loaded via the Remote Control (REMCON) option. See Remote Control Interface (2310-5103) for more information on REMCON operation.

To display Source memory, change the MEMORY field to SOURCE by pressing the ROLL UP/DOWN keys. If there is no source memory, the LA will display blank horizontal lines with no traces.

Reference memory can be used to compare the latest recorded data with earlier recordings. In the Compare Menu, you can use reference memory for cyclic comparisons of source and reference memory. See 6.2 for more information on the Compare Menu. You can load reference memory in the LA either from a disk, or via a Source to Reference transfer. You can also load reference memory via the Remote Control (REMCON) option.

To display Reference memory, change the MEMORY field to REFERENCE by pressing the ROLL UP/DOWN keys. If there is no reference memory, the LA will display blank horizontal lines with no traces.

You can set the LA's search field to examine specific events within source and reference memory. See 5.1.3.2 for more information on the SEARCH field.

Source and Reference Compare

The S XOR REF ("exclusive OR") search gives you a visual comparison of source and reference memory contents. If source and reference match, the output for a channel is low; if they do not match, the output is high. For an exclusive OR comparison, roll to S XOR R in the MEMORY field and press EXECUTE.

Source to Reference Transfer

The S --> R setting enables you to transfer the contents of source memory into reference memory. To do this, set the MEMORY field to S --> R, and press the EXECUTE key.

A source to reference memory transfer can be useful for comparing the recording from a known good target system with a problem target system, or to find contradictions in a target system with intermittent faults.

5.1.3.2 Search Field

The SEARCH function allows you to quickly find specific events (i.e., words or transitions) or source and reference discrepancies after you've taken a recording. You can search for:

- words
- transitions
- any differences between source and reference memory

Before you initiate a search, you can set the channels' order and the vertical and horizontal screen magnification. You can also set the MEMORY field to source or reference. The following subsections describe the three available search operations.

To Activate Search

You activate searches with the EXECUTE key. When the LA reaches the end of memory, it displays "NO FURTHER OCCURRENCES FOUND" for 5 seconds. To start the search over at the beginning of memory, you can press the EXECUTE key again while this message is flashing. To start the search over at a pre-defined S-HOME address, you can press the major cursor HOME key while this message is flashing. If you do not press either key, the LA automatically returns to its location before the search.

The LA must be in FIELD mode before you can initiate a search with the EXECUTE key. After you press the EXECUTE key, the FIELD mode's blinking cursor disappears, which indicates that the search is active. When the blinking cursor reappears, the search is complete.

Search for Word

When you select WORD in the SEARCH field, an additional one-digit input field (labeled "X") appears next to each channel mnemonic. You can leave the value unchanged to signify a "don't care" for that channel, or enter one of the following bits next to each mnemonic:

1 - if you want the channel high
0 - if you want the channel low

Once you have entered the search word, press EXECUTE to activate the search. The LA will stop when it finds the next occurrence of the specified word. Press EXECUTE again for the next occurrence. After it finds the last appearance of the search word, the LA displays "NO FURTHER OCCURRENCES".

Search for Transition

When you select TRANSIT in the SEARCH field and press EXECUTE, the S-marker moves to the next location that shows any transition from the previous location. A transition is defined as the next location where any displayed channel goes from high to low, or low to high.

Search for Source Equals/Not Equals Reference

When you select SRC=REF in the SEARCH field and press EXCECUTE, the S-marker will find the next non-contiguous location where all displayed channels are equal (source and reference). Conversely, when you select SRC<>REF in the SEARCH field and press EXECUTE, the S-marker will move forward to the next "not equal" location.

5.1.4 CLOCK SETTING

The NEXT CLOCK field in the Timing Diagram is identical to the SAMPLE RATE field in the Configuration Menu. Changing the NEXT CLOCK field and pressing the RUN/STOP key enables you to take subsequent recordings at different internal clock sample rates.

Table 5-3 shows the available settings for this field. Changing the sample rate of the internal clock in either the Timing Diagram or the Configuration Menu automaticallay updates the other screen.

The PRESENT CLOCK field appears above the NEXT CLOCK field. After you take a recording at the new speed, the PRESENT CLOCK field matches the NEXT CLOCK selection.

Table 5-3. Sample Rates

Sample Rate	Units	Operation
20	ns, us or ms	Non-Interlace
50	ns, us or ms	Non-Interlace
100	ns, us or ms	Non-Interlace
200	ns, us or ms	Non-Interlace
500	ns, us or ms	Non-Interlace
10	ns	Interlace

5.2 DATA LIST

The Data List shown below in Figure 5-4 displays recorded data in a state table. Each column in the Data List corresponds to a channel group, as selected by you in the Trigger Words Menu. See 4.2.1 for more information on channel groups.

The Data List display can be helpful for your software analysis projects, because it enables you to view the recording in any of the various, user-specifiable radices in all channels in the recording. You can get a hardcopy of the complete Data List. See 6.3.3 for information on how to print the Data List.

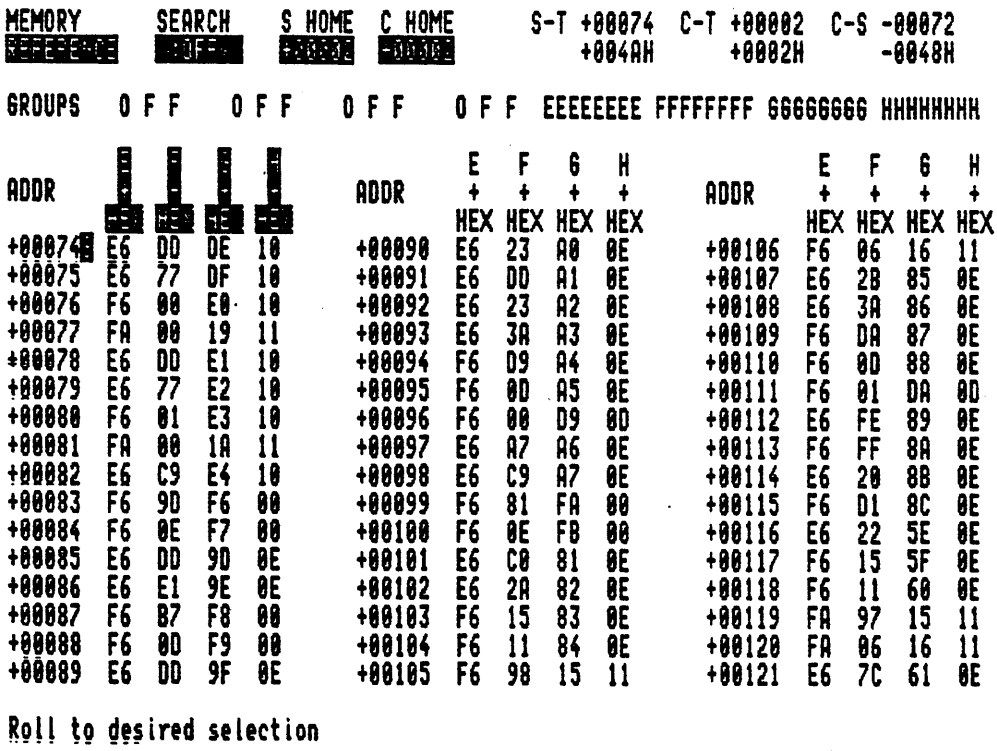

Figure 5-4. Data List

The display on the screen is a user-controllable "window" into the complete set of recorded data. The window displays a maximum of 8 columns across and 15 words down per screen. On one screen you can display a maximum of 8 channels, or a minimum of 1 channel. Section 5.2.1 describes the various ways to manipulate the viewing window.

You can manipulate the display by duplicating certain channels and deleting others, and by changing the polarity and radix of each column. With the optional Time Measurement board, you can display time or clocks counted relative to the previous sample (REL), or relative to the trigger point (ABS).

There are several ways to move through the recording. These include vertically scrolling, jumping to specific locations, and "paging" through the recording. You can note your present position in the recording via the three orientation markers. The readout at the top of the screen displays the locations and data between each pair of orientation fields. Section 5.2.2 describes these methods of moving through the recording.

After or before you have manipulated the arrangement of the Data List, you can chose to display source or reference memory, or a comparison between source and reference. You can also transfer the contents of source memory into reference for later examination. In addition, you can initiate searches for as many as 16 words in sequence, and have the LA highlight differences between source and reference memory. Section 5.2.3 describes these methods of data manipulation.

The GROUPS line in the Data List is a reminder of how you have defined and arranged channel groups in the Trigger Words Menu. Any changes in the channel group arrangement must be made in the Trigger Words Menu. After you take a recording with the new channel group arrangement, the GROUPS line of the Data List will be updated.

Likewise, any changes in probe settings (from Standard (STD) to GLITCH or OFF) , or operation (from Interlace to Non-Interlace) must be made in the Configuration Menu. After you take a recording with the new parameters, the GROUPS line of the Data List will be updated.

Like the Timing Diagram (5.1), the Data List includes user-modifiable fields as listed below in Table 5-4 that enable you to manipulate the displayed data and jump to specific locations in the recording.

Table 5-4. Fields in the Data List

Field Name	Parameters Set	Choices
MEMORY	Displayed segment of source or reference memory	Source, reference or comparison
SEARCH	Search criterion	Words, or differences between source and reference
S-HOME	Location for S-marker jump	Any location in the recording
C-HOME	Location for C-marker jump	Any location in the recording
CHANNEL GROUP	Selection of probe for data display	A-H, in 64-channel LA
POLARITY	Polarity of displayed data	+ or -
RADIX	Format of displayed data	Hex, ASCII, EBCDIC, Binary, Octal, Decimal

5.2.1 MANIPULATING THE DATA LIST

You can manipulate the state table in the Data List display by:

- Rearranging and inserting/deleting data columns
- Adding columns for newly switched-on probes
- Changing a column's polarity
- Changing a column's radix

5.2.1.1 Rearranging Data Columns

The following keys enable you to rearrange the data columns:

ROLL UP/DOWN	Rolls through defined channels, and automatically lists data for the channel. Polarity and radix remain the same. Cursor must be over letter field in column.
Letters	Automatically displays data column for specified channel group (A-H). This has the same affect as ROLL UP/DOWN, but is more direct.
T	Only if the optional Time Measurement board is installed, right-hand column changes from data to absolute (ABS) or relative (REL) time information.

5.2.1.2 Inserting and Deleting Data Columns

If you press INS when the blinking cursor is over one of the data columns, you insert a duplicate column immediately to the right. If you press DEL when the blinking cursor is over one of the data columns, you delete that column.

However, if you press INS or DEL when the blinking cursor is over any field at the top of the screen, you add or delete the column at the far right of the Data List display.

Pressing the INS or DEL keys in the column sequence, polarity, and radix fields results in the following:

INS	Duplicates the last channel on the right side of the screen. Change the group letter to any valid entry. You can duplicate a channel six times.

To see the same data in different radices, duplicate the channel by pressing INS and change to the radix you wish to see. This can be helpful for examining glitches, because you can only see glitches in binary.

To display a different channel group, duplicate the channel by pressing INS and enter the letter of the channel group you wish to see.

To display Time Measurement information (relative or absolute), duplicate the channel by pressing INS and type in "T".

DEL — Deletes the column from the right side of the cursor. Note that at least one column must always be displayed.

Pressing the INS or DEL keys in the MEMORY, SEARCH, S-HOME, or C-HOME fields results in the following:

INS — Duplicates the far-right column (from left to right).

DEL — Deletes far-right column (from right to left).

5.2.1.3 Changing a Column's Polarity

The following keys enable you to invert the polarity in a data column:

ROLL UP/DOWN — Toggles between positive (+) and negative (-) logic.

- or + — Inverts data when you enter the undisplayed sign.

5.2.1.4 Changing a Column's Radix

The following keys enable you to change the radix of each data column. It is generally helpful to use the same radix in the Data List as used in the Trigger Words Menu to make event words more recognizable. Note that you can display data in ASCII or EBCDIC, but you cannot assign trigger words in these radices in the Trigger Words Menu. See 4.2.4 for more information on trigger word assignment.

ROLL UP/DOWN	Displays data in HEX, ASCII, EBC, BIN, OCT, DEC.
A	Changes radix to ASCII (see Note following).
B	Changes radix to Binary.
D	Changes radix to Decimal.
E	Changes radix to EBCDIC. If the bit combination is not valid EBCDIC code table, "???" appears in the Data List.
H	Changes radix to Hex.

NOTE: ASCII is a 7-bit code. When you require the LA to display data in this radix, the LA software automatically modifies channel groups that are not exactly 7 bits , as follows:

Channel Group Size	Modification
1- to 5-bit	LA automatically adds leading zeros to create 7-bit ASCII code.
6-bit	LA adds 20 Hex (0010 0000) to the 6-bit word.
8- to 16-bit	LA displays an ASCII character, and adds an asterisk (*) if the 8th bit (from left to right) is a 1.

5.2.1.5 Glitch Display in Data List

As indicated in the discussion of the Configuration Menu (4.1), glitch recording can be activated for odd-numbered probes. This enables data recording on the odd-numbered probe memory, and glitch memory storage on the next highest even-numbered probe.

In the Data List, glitch memory channels display glitch data exclusively, and data channels display glitches as reverse-video exclamation points (!) to the right of the appropriate location. You can only display glitches in the binary radix.

5.2.2 MOVING THROUGH THE DATA LIST

In addition to manipulating the Data List display, you can move vertically through the recording using any of several methods. These methods are discussed in the following subsections.

5.2.2.1 Orientation Fields

Like the Timing Diagram, the Data List features three user-controlled orientation markers: the S-, C- and T-markers. In the Data List, these markers appear as one-digit reverse video fields, rather than as vertical lines.

As you move vertically through the Data List, you can examine the distances between each marker pair. For each pair, the upper value represents the distance as a decimal number; the lower value represents the distance in hex.

See 5.2.2.3 (S-HOME, C-HOME) for more information on moving the orientation markers.

S-Marker

The S-marker field notes the first represented memory location. Each time you press the major cursor keys, the S-marker "jumps" through the display one screenful at a time.

C-Marker

You can control the C-marker field to show the number of memory locations between any of the three marker fields. As in the Timing Diagram, you can move the C-marker in the Data List with the minor cursor keys in SCREEN mode.

T-Marker

The T-marker field appears at the trigger point, which is always designated location +0000. Pre-trigger data has negative locations; post-trigger data has positive locations.

You define the position of the trigger point within memory in the Configuration Menu. The position of the T-marker in the Data List does not change, unless you take a new recording by pressing the RUN/STOP key.

5.2.2.1.1 How to Scroll in Screen Mode

You can move vertically through the Data List to view different segments of the recording. To scroll through the display, you must first activate SCREEN mode by pressing the FIELD/SCREEN key once, if you are presently in FIELD mode. The FIELD/SCREEN key toggles between the two modes. When you press it again, the blinking cursor returns to indicate that you are back in FIELD mode.

When you have activated SCREEN mode, you can use the up and down major cursor keys in SCREEN mode to vertically scroll through the Data List one memory location at a time.

5.2.2.2 Readout above Data List

The readout above the Data List shows the distances between each marker pair (S-T, C-T and C-S). The upper value represents this distance as a decimal number; the lower value represents the distance in hex. Note that the Data List shows the number of addresses between markers; this is different from the Timing Diagram, which can measure time distances between markers.

5.2.2.3 Jumping through the Recording

In addition to vertically scrolling through the Data List to find a particular memory location in a large (8K or 16K) recording, you can use one of the FIELD mode techniques discussed in the following subsections. These are alternatives to using the cursor keys in SCREEN mode to scroll through the recording one location at a time.

S-HOME, C-HOME

In the S-HOME field, you can enter an S-marker location to "jump" to; in the C-HOME field you can enter a C-marker location to "jump" to. When you enter a location in the appropriate field and press the major cursor HOME key for the S-marker, or the minor cursor HOME key for the C-marker, the LA jumps to the new location and "remembers" the previous location. When you press the appropriate HOME key again, the markers return to their previous location.

The S-marker remains at the top of every data column. The C-marker may seem to disappear if you instruct the LA to jump outside the window in which it was displayed.

NOTE: To jump to the beginning of pre-trigger memory, you can enter -9999 in the S- or C-HOME fields. The LA will automatically show the actual beginning location in the S- or C-HOME fields. You can then press one of the HOME keys to jump to the beginning of pre-trigger memory.

To jump to the end of post-trigger memory, enter +9999 in the S- or C-HOME fields. The LA will automatically show the actual ending location in the S- or C-HOME fields. You can then press one of the HOME keys to jump to the end of post-trigger memory.

5.2.2.4 Moving by Screen in the Data List

Each column in the Data List displays a maximum of 15 locations. To page in 15-location multiples, press the left and right major cursor keys in SCREEN mode.

5.2.3 MANIPULATING MEMORY IN DISPLAY

In the Data List, two fields enable you to manipulate the display memory: MEMORY and SEARCH. You can use these fields to compare this recording to a previous recording, or to search for particular words or locations.

5.2.3.1 Memory Field

The MEMORY field enables you to work with and save recorded data after the recording. The following display choices are available:

- Source (SOURCE)
- Reference (REFRNCE)
- Source and reference compare SRC(+REF), REF(+SRC)
- Source to reference transfer (SRC --> REF)

Source and Reference

Source memory is defined as the most recently captured data; this data is physically located on one of the memory boards. You can transfer and store this data in reference memory, and then store the recording to disk. Source memory cannot be loaded into the LA from a disk, but it can be loaded via the Remote Control (REMCON) option. See Remote Control Interface (2310-5103) for more information on REMCON operation.

When you call up the Data List, source memory is displayed as the default. To display source memory if this field is set to REFERENCE, press the ROLL UP/DOWN keys. If there is no source memory, the LA displays zeros in the Data List.

You can use reference memory to compare the latest recorded data with earlier recordings. In the Compare Menu, you can use reference memory for cyclic comparisons of source and reference memory. See 6.2 for more information on the Compare Menu. You can load reference memory in the LA either from a disk, or via a Source to Reference transfer. You can also load reference memory via the Remote Control (REMCON) option.

To display reference memory, place the blinking cursor over the MEMORY field and roll to REFERENCE with the ROLL UP/DOWN keys. If there is no reference memory, the LA displays zeros in the Data List.

Source and Reference Compare

Two choices in the MEMORY field enable you to compare source memory to reference, or reference memory to source: SRC(+REF) and REF(+SRC).

In the SRC(+REF) comparison, source data is displayed and is automatically highlighted in reverse-video where it differs from reference memory. In the REF(+SRC) comparison, reference data is displayed and automatically highlighted in reverse-video where it differs from source memory.

Source to Reference Transfer

When you set the MEMORY field to SRC->REF and press the EXECUTE key, the contents of the source memory are transferred to reference memory. (You can also transfer data in this way via the REMCON option.) This tranfer can be useful in comparing the recording from a known good target system to a problem target system, or for finding contradictions in a target system with intermittent faults.

When SRC --> REF is displayed, you cannot use any other keys for input until you press EXECUTE or use the ROLL UP/DOWN keys to change the MEMORY field to another setting.

5.2.3.2 Search Field

The SEARCH function allows you to quickly find specific events or source and reference memory arrangements after you've taken a recording. You can search for:

- A sequence of as many as 16 words
- Equality/inequality between source and reference memory

Before you initiate a search, you can reset the columns' order, polarity and radix. You can also set the MEMORY field to match the type of memory you want to search. The following subsections describe how you can initiate a search, and the available search criteria.

The S-marker field denotes the beginning of the search area, and the C-marker field notes the end of the search following the last detection of the searched condition.

If you have turned off individual channels (by entering X's in the GROUPS field of the Trigger Words Menu), only the available channels will be represented in the word search input field of the Data List.

To Initiate a Search

You activate the search operation by pressing the EXECUTE key after you have entered the search data. When the LA completes the search operation, it displays the total number of occurrences below the SEARCH field. If it cannot find any occurrences of the search condition, it displays the message "NO FURTHER OCCURRENCES FOUND" at the bottom of the screen.

The LA must be in FIELD mode before you can initiate the search operation. After you press the EXECUTE key, the FIELD mode's blinking cursor disappears, indicating that the search operation is active. When the blinking cursor reappears, the search operation is complete.

Search for Word

To enter a search word, change the SEARCH field to WORD by pressing the ROLL UP/DOWN key. When you move the blinking cursor out of the SEARCH field, the LA displays a row of input fields above the first location line. Enter the data you want to find in these fields, using the alphanumeric keys. Note that the number of digits in the word input fields match the selected radix. You can search for as many as 16 locations, previously defined trigger words or data words.

Search for Locations

The LA can search for as many as 16 locations in series. To initiate a location search, enter the pre- or post-trigger location number in the input field, which initially contains +0000. When you enter a location in this field and exit the field, another input field appears. To initiate a search for two locations separated by an interval, you can enter the first location, set the following locations to XXXX (don't care), and enter the last location.

As you enter locations and exit the field, the previously entered location number seems to "disappear", because the LA stores the location number in memory.

Search for Trigger Words

The LA can search for as many as 16 trigger words in series. To initiate a trigger word search, press the ROLL UP/DOWN key over the +0000 setting to change the input field to +XXXX. Then enter either the word number or mnemonic for the event word, which you previously assigned in the Trigger Words Menu. After you enter the word number or menmonic and exit the field, the LA automatically displays the trigger words you assigned to that name.

When you enter trigger words and exit the field, the previously entered word seems to "disappear", because the LA stores the data in memory.

To initiate a search for two trigger words separated by an interval, you can enter the first word, set the following locations to XXXX (don't care), and enter the last word.

Entering Search Words

The LA can search for as many as 16 search words in series. To initiate word search, enter words in the fields labeled "X". The number of X's is determined by the selected radix and the number of active channels.

Note that you cannot enter search words in ASCII or EBCDIC. Therefore, before the word search, check that the radix field is not in ASCII or EBCIDC. If it is, change the field as follows:

1. Roll the SEARCH field to OFF.
2. Change the radix to HEX, BIN, OCT or DEC (with ROLL UP/DOWN keys or by directly entering the first letter of each radix).
3. Roll the SEARCH field to WORD, and move to the word input field.
4. Enter search word value in the selected radix.

Search for Source Equal/Not Equal Reference

To initate a search for source equals/not equals reference, set the SEARCH field to SRC=REF, or SRC<>REF, respectively. When you press the EXECUTE key, the LA searches the recording and displays the total number of occurrences. If no source and/or reference memory is present, the number of occurrences is zero.

Search for Compare False

To initiate a search for a compare false, set the MEMORY field to S XOR REF to show where the equal or not equal segments start and end. Then set the SEARCH field to either SRC=REF or SRC<>REF.

This instructs the LA to find the next noncontiguous valid search event, when you press EXECUTE. That is, it will only look for an occurrence after a non-occurrence, rather than trying to find successive locations containing equal or not equal values.

CHAPTER 6

SPECIAL MENUS

This chapter describes the three Special Menus in the LA: the File Manager Menu, Compare Menu, and I/O Menu.

6.1 FILE MANAGER

The File Manager (Figure 6-1) is the first of the three Special Menus. To access the File Manager, press the SPEC key while the Configuration, Trigger Words or Trigger Sequence Menu is displayed. From this menu you can:

- Store and recall setup and reference files.
- Enter a two-line comment field for each setup and reference file.
- Execute utility programs, such as SKEWADJ for the optional 500-MHz high speed board.
- Perform CP/M file operations, such as assigning write protection, copying, deleting, and renaming.
- Select the "active" disassembler.
- List selective file directories and disk contents.
- Store and recall data and setup files via Remote Control.

From the File Manager you can see the file name, write-protect status and file size of all files accessible by the CP/M DIR command. If no files of a designated type are present in a directory, the LA displays the message "NO FILE". If there are more files on the disk than the LA can display on one screen, it displays the message "MORE" at the lower right corner of the screen. To view the additional files, move the cursor to this word and press the major cursor keys to scroll through the directory list.

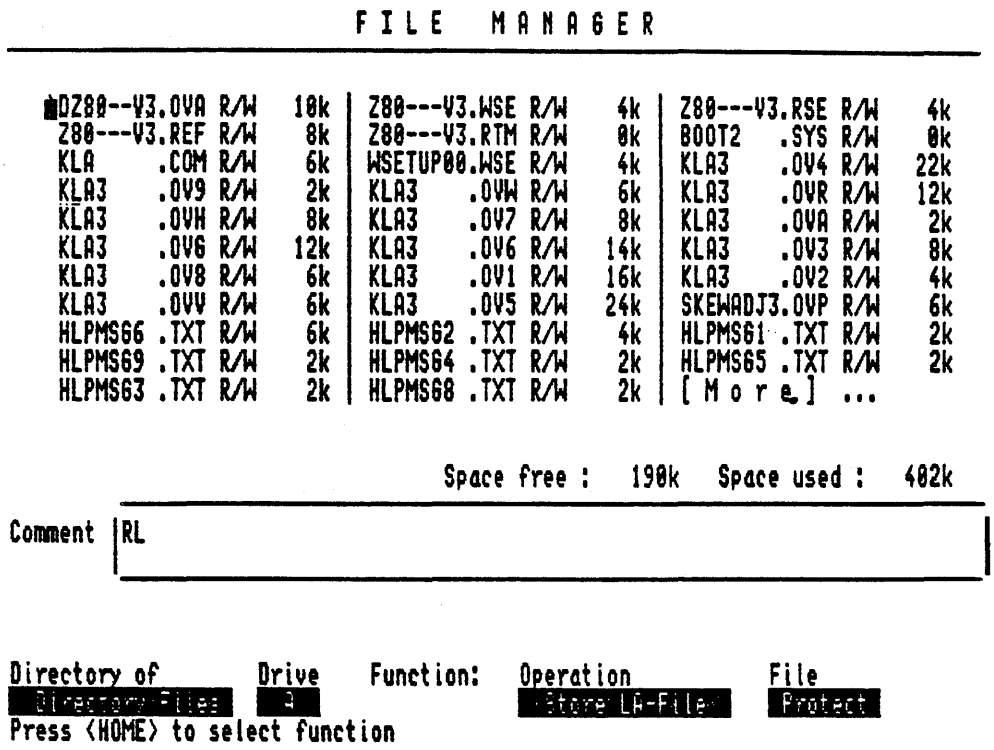

Figure 6-1. File Manager

The File Manager Menu includes the following user-modifiable fields:

- Directory
- Drive Designation
- Operation
- File

These four fields can be conceptually divided into two groups of two: DIRECTORY/DRIVE and OPERATION/FILE. In the DIRECTORY field, you can view the file names in each directory. In the DRIVE field, you can select the drive (from A-H).

In the OPERATION field, you can select the desired file activity (for example, store or recall data/setup files, execute utilities, etc.). You can set the FILE field to assign a disk status to a specified file.

6.1.1 DIRECTORY LISTINGS

When the blinking cursor is in the DIRECTORY field, you can press the ROLL UP/DOWN keys to indicate the type of directory you want to see. The File Manager lists the file names in the selected subdirectory. Classes of files can be distinguished by the file name extension, as indicated below.

- WORKSETUP FILES (extension .WSE)

  These files contain settings for all LA menus and displays, along with any screen comments and a selected disassembler, if previously recalled. One setup file, WSETUP00.WSE, must be present as it contains the default parameter settings for the menus and displays. The LA loads this file when you boot the instrument or press the reset key.

  To customize the default setup file WESETUP00.WSE, you can set and then store the desired parameters from the Configuration, Trigger Words, Trigger Sequence, Compare, and I/O Menus. You can save different sets of setup parameters by assigning file numbers XX in the WSETUPXX.WSE file.

- UTILITY PROGRAMS (extension .OVP)

  These files are programs that can be executed within the LA software. For example, the skew adjust program is supplied with the optional 500-MHz board.

- DISASSEMBLERS (extension .OVA)

  These files correspond to the available processor-specific disassemblers. To access a disassembler, you must first load the corresponding file to designate an "active" disassembler via the OPERATIONS field. Note that the file extension for the User-Programmable Disassembler is .FPD.

- DIRECTORY FILES

  These are all the files that could be seen following a CP/M DIR command, as long as you did not set them to "system" with the STAT command. Note that you cannot see LA operation files in the directory, because they are set to system.

- DATA FILES (extension .REF)

  These files contain your stored recordings from source or reference memory. Each data file can have as many as two associated files with the extensions .RSE and .RTM. The setup file has the extension .RSE; the extension for recorded information from the optional Time Measurement board is .RTM. The LA displays all .RTM files in the main directory listing.

If the LA display includes "MORE" at the lower right corner of the screen in a file name list, there are additional file names that cannot fit on the screen. To read the additional file names, press the HOME or up arrow key to move the blinking cursor from the field to a reverse-video prompt (>) in the file name list. Move this prompt to "MORE" with the major cursor keys, and press the down arrow key to scroll through the additional file names.

To return to the DIRECTORY field, press either HOME key. If you move the cursor to the end of the list, you can also return to the DIRECTORY field by pressing the down arrow key.

6.1.2 DRIVE SELECTION

To set the current disk drive, enter A-H for the drive designation letter in the DRIVE field. Note that illegal characters are not accepted, and lowercase letters are automatically converted to uppercase.

After you set the drive, the LA checks to see if the drive is installed, and then displays the directory. If it detects an error on the drive, the LA displays the message "DRIVE X NOT READY OR INSTALLED" for approximately 5 seconds. It then displays the previously selected drive letter.

6.1.3 FILE MANAGER ACTIVITIES

In the OPERATION field, you can select from among the file activities listed below by pressing the ROLL UP/DOWN keys. See 6.1.3.1 for information on how to store and recall LA setup files. See Appendix A for details about the file format and actual contents of all LA files.

- STORE LA FILE

  This operation enables you to store a setup or reference file. When you select this operation, the LA displays two additional reverse-video fields and a comments window.

A setup file contains the parameters you defined in the menus and displays (e.g., probe arrangement, clock selection, trigger and event words, trigger sequence instruction levels). The default setup file is WSETUP00.WSE.

- RECALL SETUP

  This operation enables you to recall a setup file. If the LA encounters an error while recalling this file, it displays the message "DATA TRANSFER ERROR" and retains the old setup information.

- RECALL DATA

  This operation enables you to load file groups with the extensions .RSE, .REF and .RTM. Note that you can only load .RTM files if the optional Time Measurement board is installed. If the LA cannot read the stored reference data, it displays the error message "XXXXXXXX.XXX IS MISSING OR DEFECTIVE".

- EXECUTE PROGRAM

  This operation enables you to run utility programs from the LA, such as the SKEWADJx program. This program adjusts the skew between the channels of the optional 500-MHz board.

- SELECT DISASSEMBLER

  This operation enables you to select one "active" disassembler. You must identify a disassembler in the File Manager in order to later call up this software by pressing the F2 key. If you press the F2 key but have not yet recalled a disassembler file in the File Manager, the LA displays an error message.

6.1.3.1 Storing and Recalling LA Setup Files

When you set the OPERATION field to STORE LA FILE and press the up arrow or the HOME key, the LA display adds three additional fields: a comments window and two reverse-video input fields. The following paragraphs describe these fields.

COMMENTS WINDOW

You can both enter and edit text in the two-line comments window. When you recall a stored file, the LA automatically displays its associated comments window in the File Manager.

You can enter any printable character in the comments window, using the LA keypad or an external ASCII keyboard. The following keys on the LA keypad enable you to edit text in the comments window:

- The INS key inserts a space to the right of the cursor. Characters pushed out of the comments window on the right cannot be retrieved.
- The DEL key erases a character to the left of the cursor, and moves the cursor back one character. This adds spaces to the right of the line.
- The left minor cursor key moves the cursor one space to the left; the right minor cursor key moves the cursor one space to the right.
- The minor cursor HOME key moves the cursor to the first space on the first line.
- The <CR> key on the ASCII keyboard moves the cursor to the first space on the second line.

When you reach the end of the first line in the comments window, the text automatically wraps around to the second line. When you reach the end of the second line, the cursor remains in the last space.

FILE TYPE FIELD

This reverse-video field under the left side of the comments window enables you to choose the type of file to be stored: REFERENCE DATA, SOURCE DATA or WORK SETUP. A corresponding file extension (see 6.1.1) is assumed for the file type you specify.

NEW FILENAME FIELD

This field enables you to assign a new filename to the file to be stored. You can enter the new filename by using the alphanumeric keypad for input, and minor cursor keys to move from character to character within the field. Note that because the file name extension is determined by the type of file, this part of the field does not appear in reverse-video.

To store an LA SETUP file, first press the up or HOME key while the blinking cursor is over the OPERATIONS field. This moves the cursor up to a reverse-video prompt in the directory listing, and activates two blinking arrows around the OPERATIONS field. Then follow steps 1 through 4 below:

1. Select the file type by pressing the ROLL UP/DOWN keys.

2. Press the up arrow to enter text in the comments window, if desired.

3. Press the down cursor key to enter the file name.

4. Press EXECUTE to activate the operation when the blinking arrows are around the OPERATION field.

Note that if the optional Time Measurement board is installed, the software asks if time data should also be stored. Unless you answer "yes" to this question by pressing the INS/YES key, the LA does not store time data.

The software also asks whether an existing file with the same name should be overwritten. The LA displays the messages "DISK FULL" or "DIRECTORY FULL" and names the disk and the directory, if it cannot write to a disk.

6.1.3.2 Other File Operations

Steps 1 through 5 below describe File Manager activities for recalling reference files, loading utility programs, and selecting the "active" disassembler:

1. Press the ROLL UP/DOWN keys in the OPERATIONS field until the LA displays the desired activity.

2. Press the up arrow or HOME key. The screen will change as follows:

   - The cursor moves to become a reverse-video prompt (>) in the directory listing.

   - The parameter field is now framed by two blinking arrows. These arrows indicate that the function is active.

3. Select a file in the directory by moving the reverse-video prompt with the major cursor keys.

4. Press EXECUTE while the cursor is over the selected file, and the blinking arrows frame the parameter field. This instructs the LA to perform the desired operation.

5. Press HOME to exit the directory listing and return to the parameter fields along the bottom of the screen. If the cursor is at the last file in the directory, you can press the down arrow key to return to the OPERATION field.

6.1.4 FILE STATUS

In the FILE field, you can press the ROLL UP/DOWN keys to select one of the following file operations:

- PROTECT
- UNPROTECT
- DELETE
- RENAME
- COPY

To activate a file operation, first set the DIRECTORY field to display the appropriate file group. Then press the up arrow key to move the cursor up to the desired individual file, and press the EXECUTE key. If you attempt to delete a file that is write protected, the LA will display the message: "PRESS YES TO DELETE EXISTING FILE".

Note that any key interrupts the deletion process. The LA does not delete files that are necessary for loading LA software. If you try to delete one of these files, the LA displays the message "FUNCTION CANNOT BE EXECUTED".

FILE NAMING CONVENTIONS

When renaming a file, you can enter all letters and numerals. Additionally, you can use the hyphen (-) as a separator. You cannot enter a blank in the first position of a file name, as it writes over the entire field with blanks. However, you can enter a blank in the first position of a file extension to erase the extension for the newly named file.

6.1.5 ERROR MESSAGES IN THE FILE MANAGER

The error messages summarized below flash on the last line of the display for approximately 5 seconds when errors occur. Press any key to stop the error message from flashing.

MESSAGE: DRIVE X NOT READY OR INSTALLED
REASON: The specified drive is not ready or installed.
ACTION: Check to see if the specified drive is connected and ready for operation. Also check to see that the disk is properly inserted, and that the latch is closed.

MESSAGE: DRIVE NOT READY
REASON: The current drive accessed during disk I/O is not ready.
ACTION: Check to see that the disk is properly inserted, and that the drive is running.

MESSAGE: FUNCTION CANNOT BE EXECUTED
REASON: You may have attempted to RENAME or DELETE a file that controls LA operation.
ACTION: File operations can only be performed on a copy; use the copy operation first.

MESSAGE: FILENAME IS NOT ALLOWED
REASON: You have attempted to RENAME and/or STORE an LA system file.
ACTION: You must enter another file name.

MESSAGE: DATA TRANSFER ERROR
REASON: This message can occur during any disk I/O.
ACTION: Reattempt the operation. If the error message occurs again, the disk might be defective.

MESSAGE: DISK FULL; CHANGE DISK OR DRIVE
REASON: This message can appear during a write operation when there is no longer enough room on the disk for the rest of the file.
ACTION: Either make room on the disk by using the DELETE function, or change the disk and/or drive.

MESSAGE: XXXXXXXX.XXX IS MISSING OR DEFECTIVE
REASON: The file to be loaded is not present, or it is damaged by a read error.
ACTION: If the file is present, reattempt the operation. If the error message occurs again, the disk may be defective. Check the accuracy of the file name you specify in the DIRECTORY field.

MESSAGE: DIRECTORY FULL; CHANGE DISK OR DRIVE
REASON: There is no more room in the directory for another entry.
ACTION: Either erase unneeded files, or change the disk and/or drive.

MESSAGE: INCOMPATIBLE SOFT/HARDWARE REVISION
REASON: This message only appears when you have selected a disassembler whose version number is not compatible with the LA hardware.
ACTION: Select another disassembler with a version number that matches the LA hardware. Note that the disassembler version is the last number in the disassembler file name (e.g., DZ80--V3.0VA).

MESSAGE: DFPD--VxOVA NOT EXECUTABLE WITHOUT TABLE
REASON: You have tried to select the User-Programmable Disassembler.
ACTION: You must select the disassembler file with the extension .FPD.

MESSAGE: NO DATA AVAILABLE
REASON: Appears when you attempt to store data when none has been captured yet.
ACTION: To store setup data, you must have made a recording; to store reference data, you must have executed a source-to-reference transfer.

6.2 COMPARE MENU

In the Compare Menu (Figure 6-2), you can configure the LA to make cyclic comparisons between source and reference data. This is sometimes referred to as the "babysitting" mode. You load the reference data by recalling a reference file in the File Manager. See 6.1 for more information. You can also load reference data over one of the LA interface ports in REMCON operation. (See 2310-5103 for more information.)

In the Compare Menu you can:

- Detect and analyze intermittent errors.
- Limit comparison to specific memory segments and channel groups.
- Define a comparison tolerance (jitter) from 0 to 9.

The LA compares the two segments by continually recording data in the specified locations and then comparing the new (source) data to the reference data. When it finds a match between source and reference memory, you can instruct the LA to freeze and interrupt the process (HALT), increment the cycle counter (COUNT), or store the entire recording on a disk (STORE).

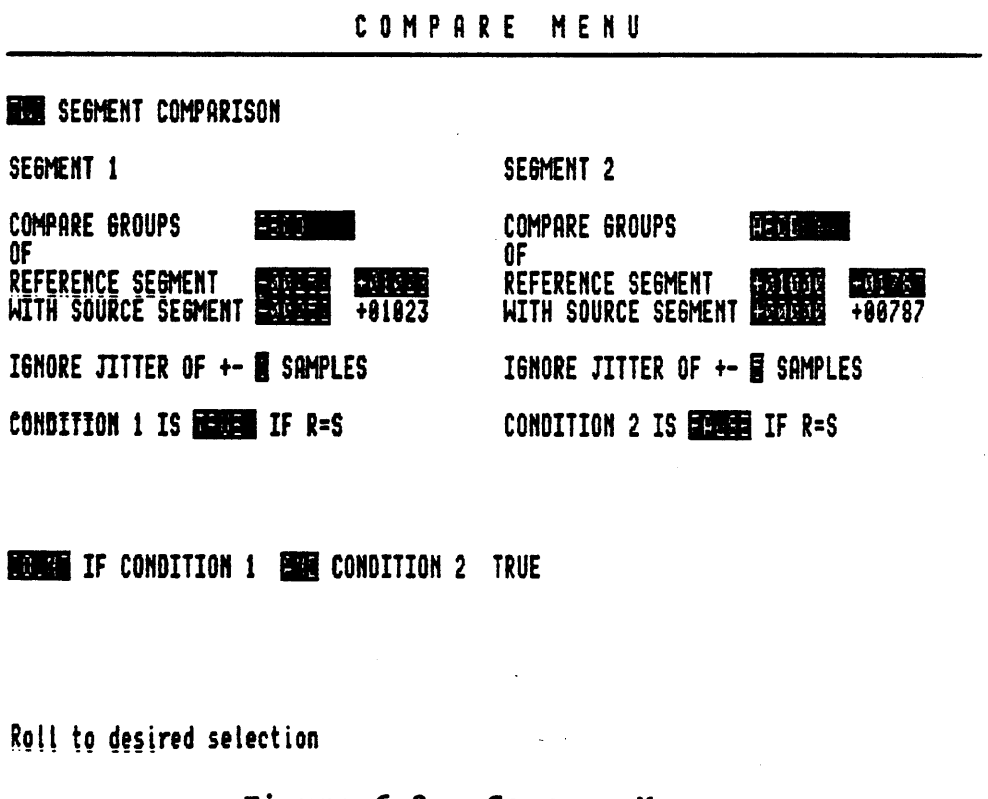

Figure 6-2. Compare Menu

Table 6-1 lists all fields in the Compare Menu and gives a brief description of each; the fields are discussed in the subsections following.

Table 6-1. Fields in the Compare Menu

Field Name	Parameters Set	Choices
SEGMENT COMPARISON	Numbers of source and reference memory segments to compare	One, two
COMPARE GROUPS	Channel groups for comparison	A-H
REFERENCE/ SOURCE SEGMENT	Starting and ending search boundaries	-00255 to +01792
JITTER	Comparison tolerance	0-9
TRUE/FALSE	Condition for source and reference data active true/false	True, False
HALT/COUNT/ STORE	Action to be taken after match or mismatch	Halt, Count, Store
AND/OR	True condition choice for Condition 1 AND/OR Condition 2	And, Or

6.2.1 SEGMENT COMPARISON

You can choose to compare either one or two segments in this field by pressing the ROLL UP/DOWN keys. When you change this field to TWO, an identical group of input fields labeled SEGMENT 2 appears to the right of SEGMENT 1.

6.2.2 COMPARE GROUPS

In this field, you can select the channel groups for comparison (A-H). All active channels are listed in the COMPARE GROUPS field. To delete individual channels within groups, press "X" (don't care) over the channels you wish to delete. Press the minor cursor keys to move between letters (i.e., groups); use the alphanumeric keypad for input.

Establishing compare groups is useful when only a portion of the data repeats over some of the channels and can be compared. For example, this is the case when the address bus runs in a reproducible loop, but the data on the bus varies because it comes in on I/O ports.

6.2.3 SEGMENT BOUNDARIES

In this field, you can enter the starting and ending address range boundaries (in the range -00255 to +01792) for the memory segments to be compared.

While you can separately define source and reference memory segments with different addresses, the length of the compared segments must be identical.

This ability to define segment boundaries and thereby limit comparison areas can be useful when data is only reproducible in short fragments. For example, you can trigger on a subroutine, determine the address for the subroutine, and then perform the comparison at the exact memory segment for that subroutine.

6.2.4 JITTER

In this field, you can enter a jitter (comparison tolerance) level of 0 to 9.

If you want to compare memory address x in reference memory to address y in source memory, and you set the comparison tolerance (jitter) to 0, the data is considered identical only if a data transition at address x in reference memory appears exactly at address y in source memory.

If you set the comparison tolerance to ± n samples, the data is considered identical only if the same transition is found anywhere between x-n and x+n in reference memory, and y-n and y+n in source memory.

The jitter setting can be useful when recording with the LA's internal clock, which is asynchronous with the target system clock. When you use an asynchronous clock, you can set the jitter to counteract the expected time distances between synchronous and asynchronous events.

The example in Figure 6-3 shows a comparison tolerance of 1, with four data transitions, as follows:

- The first transition is +1 sample
- The second transition is compared exactly
- The third transition is -1 sample
- The fourth transition is not within the allowed tolerance

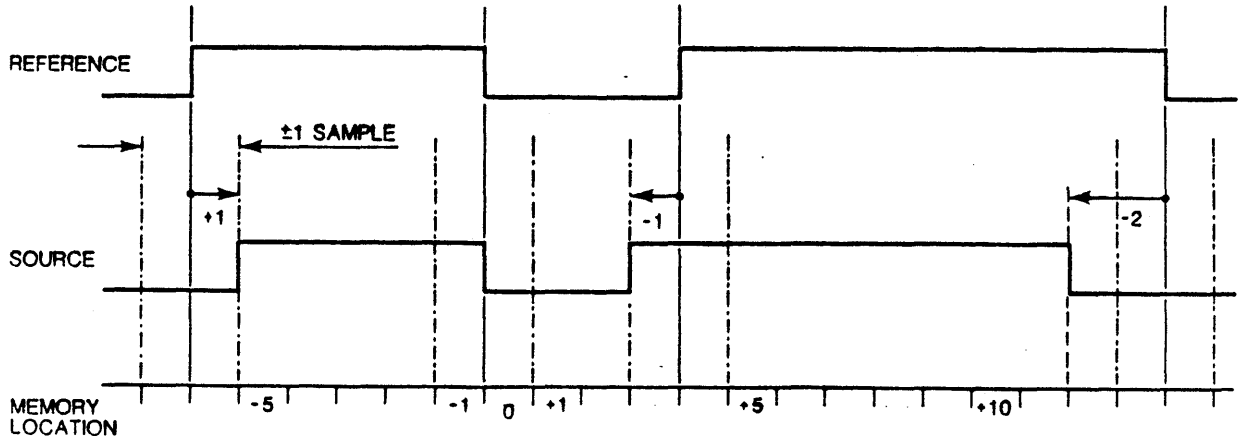

Figure 6-3. Comparison with +1 Jitter Setting

6.2.5 DATA EQUALITY/INEQUALITY

In this field, you can establish two active true/active false states for Condition 1 and/or Condition 2. The condition is active true if reference equals source; the condition is active false if reference does not equal source. You can select either state with the ROLL UP/DOWN keys.

Source and reference data is considered unequal when the data at the assigned position x in source memory is not found in reference memory between addresses y-n and y+n.

6.2.6 FINAL CONDITION INSTRUCTIONS

In this field, you choose one of three final condition instructions (HALT, COUNT or STORE) using the ROLL UP/DOWN keys to select the condition, and the EXECUTE key to initiate the instruction. These instructions determine the action to be taken after data is active true (reference equals source) or data is active false (reference doesn't equal source).

HALT

This instruction stops the record/compare cycle when the search condition is met, and saves the data of the last recording in source memory.

COUNT

This instruction calculates the number of occurrences in which the condition was met, and the total number of compare cycles. The COUNT instruction can be used for statistical analysis of the occurrence of a defined event; for example, this can indicate how often a time-critical signal exceeds tolerance.

STORE

This instruction stores source data on a disk when the search condition is fulfilled. Thus, you can store errors on a disk while the comparison automatically continues.

6.2.7 AND/OR

This field enables you to choose between executing the final instruction (HALT, COUNT or STORE) in Condition 1 AND Condition 2, or Condition 1 OR Condition 2. You can set this field by pressing the ROLL UP/DOWN keys.

6.3 I/O MENU

In the I/O Menu (Figure 6-4), you can set the following parameters for the LA input and output functions:

- CONTROL: Local (i.e., keypad/keyboard) or Remote Control.
- PRINTER OUTPUT: Selected printer for screen-to-printer dumps of Timing Diagrams and Data Lists.

The LA features two types of Remote Control: Serial RS-232 and IEEE-488 GPIB. The Serial RS-232 Remote Control is available with standard LA hardware and software; the GPIB Remote Control is a separate option. See 2310-5103 for operational instructions and examples of both types of Remote Control.

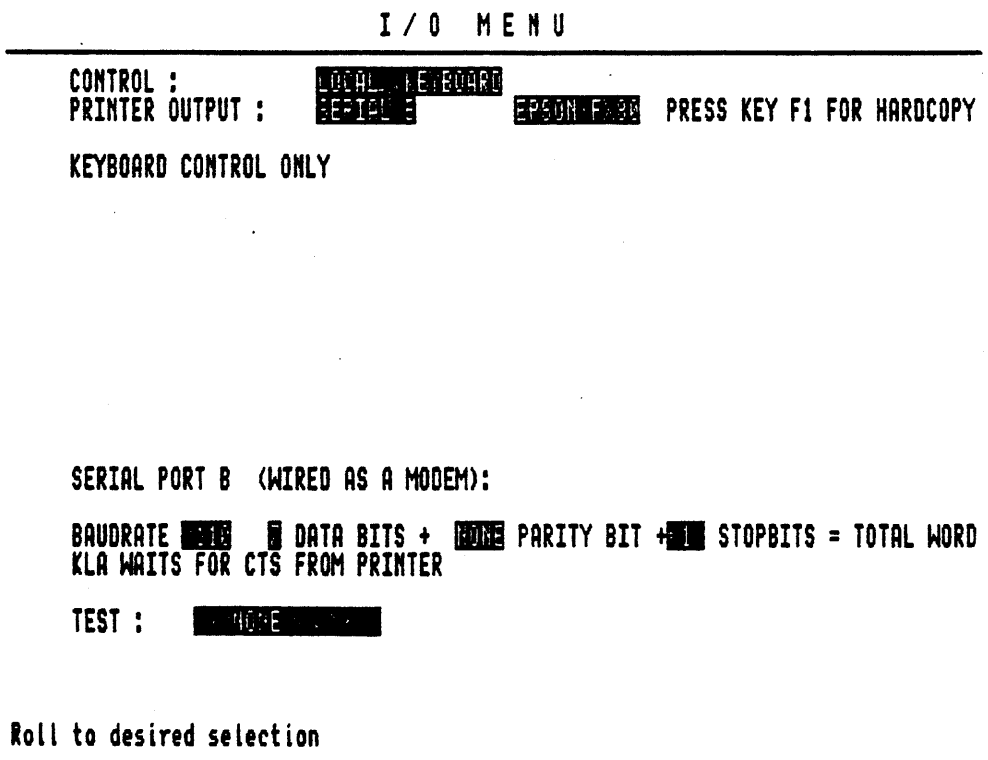

Figure 6-4. I/O Menu

6.3.1 CONTROL FIELD

In the CONTROL field, you can press the ROLL UP/DOWN keys to select LOCAL KEYBOARD or REMOTE SERIAL A control. If you have the GPIB Remote Control firmware (option KLA 488), you can set the CONTROL field to REMOTE GPIB.

This field specifies the component that can access and change parameters in LA menus and displays. In LOCAL KEYBOARD control, you can access and change parameters using either the LA front panel keypad or an external ASCII keyboard. In the REMOTE SERIAL A setting, you can remotely control the LA from another instrument over a serial RS-232 port.

Note that when you select REMOTE SERIAL A control, the message "REMCON IS ACTIVE" appears in the lower right corner of all LA menus and displays. This message indicates that the LA is ready to listen for remote control data; however, you can still locally control the instrument via keys on the front panel keypad or an external ASCII keyboard.

When you set the CONTROL field to REMOTE SERIAL A, you can specify values for the parameters listed below. To do this, press the ROLL UP/DOWN keys on the LA keypad and/or the equivalent keys on the external ASCII keyboard.

- BAUD RATE (110, 150, 300, 600, 1200, 2400, 4800, 9600)
- DATA BITS (7 or 8)
- PARITY BITS (none, even, odd)
- STOP BITS (1, 1.5, 2)

You can also define the parameters listed below for the remote instrument's communication with the LA:

- Define the remote instrument as a COMPUTER or TERMINAL
- Set HALF or FULL DUPLEX communication
- Set a handshake type: HARDWARE, SOFTWARE, or DISABLE

6.3.2 PRINTER OUTPUT FIELD

Once you have determined what instrument will control the LA by setting the CONTROL field, you can set the two fields in the PRINTER OUTPUT line. In these fields, you identify both the communication mode (parallel or serial) and model number (e.g., Epson FX80) you plan to connect to the LA for screen-to-printer dumps of your recordings. Depending on the graphics capability of your printer, both Timing Diagrams and Data Lists can be reproduced on parallel or serial printers. Note that if you have selected REMOTE SERIAL A control, the parameter fields discussed in 6.3.1 remain on the screen.

You can set the PRINTER OUTPUT field to PARALLEL, SERIAL B or DISABLED by pressing the ROLL UP/DOWN keys. Note that if you select SERIAL B, you must also change the setting of three slide switches on the Interface board. See 6.3.2.1 for more about these switches.

SERIAL B

When you press the ROLL UP/DOWN keys to select SERIAL B printer output, additional parameter fields appear near the bottom of the screen. In these fields, you can set following parameters for the PRINTER port:

- BAUD RATE (110, 150, 300, 600, 1200, 2400, 4800, (9600)
- DATA BITS (7 or 8)
- PARITY BITS (none, even, odd)
- STOP BITS (1, 1.5, 2)

PARALLEL

When you press the ROLL UP/DOWN keys to select PARALLEL printer output, the message "PRINTER IS CENTRONICS COMPATIBLE" appears on the screen. The PRINTER port is automatically configured for this communications protocol.

6.3.2.1 Parallel/Serial Conversion

If you select the SERIAL B printer output, you must move the three slide switches on the Interface board from their default setting on the left (to enable the parallel port) to the right (to enable the serial port).

The Interface board is the second board from the top of the LA. To access these slide switches, you must remove the LA back panel. As shown in Figure 6-5, when all three switches set to the left, the parallel port is enabled; when all three switches are set to the right, the serial port is enabled. Once you have set these slide switches, the PRINTER connector is physically enabled for the selected communications mode.

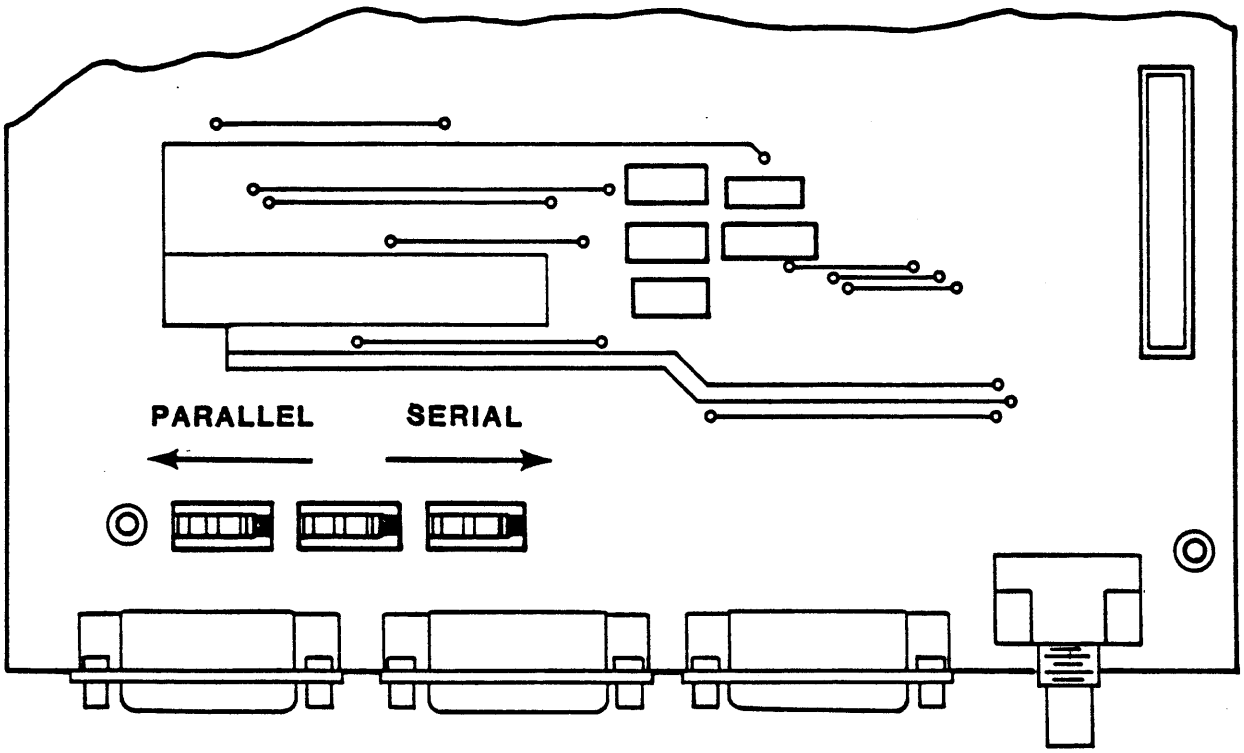

Figure 6-5. Parallel/Serial Conversion Switches

6.3.2.2 Supported Printers

You can press the ROLL UP/DOWN keys to select one of the printers listed below. Note that graphics drivers are necessary for printing Timing Diagram waveforms.

Micro 93	Activates graphics driver for OKI Microline 93p.
Micro 84 O	Activates graphics driver for OKI Microline 84. Use this setting for printers with older firmware.
Micro 83 A	Activates graphics driver for OKI Microline 84. APA graphics firmware required.
Micro 84 N	Activates graphics driver for OKI Microline 84. Use this setting for printers with newer firmware.
Epson FX80	Activates graphics driver for Epson FX80, MX80 or RX80.
IBM (X80)	Activates graphics driver for IBM Graphics Printer.
Alpha mode	Does not activate any graphics driver. Only printable ASCII characters are output corresponding to the LA character PROM, except in the following case: In the 16-channel Timing Diagram, the places where the C-, T- and S-markers are displayed are replaced by blanks, because non-printable control characters are used. For the same reason, the Timing Diagram is replaced by blanks in the 8-channel display.

6.3.3 PRINT SCREEN

The F1 key initiates a printout of the current screen. To print more than a screenful of data from the Data List, press Shift F1 on the LA keypad (or Escape F1 on the ASCII keyboard, in sequence). This instructs the LA to print all data between the user-definable S- and C-marker locations.

To stop a printout, press any key (e.g., TIMING, LIST). If you interrupt a printout by pressing F1, some of its content will be included in the following printout. Note that the LA may freeze and require rebooting if you press the F1 key before you have properly configured the printer output.

6.3.4 INTERFACE TEST

You can test the communications links with a printer and/or a remote control device in the TEST field near the bottom of the I/O Menu. Depending upon the printer interface you have selected and whether you specified remote control, you can roll to any of these values in the TEST field:

- SER A INTERFACE
- SER B INTERFACE
- PAR INTERFACE
- GPIB INTERFACE

For any of these, incoming data is displayed immediately below the TEST field.

To conduct an interface test, press the F1 key while the cursor is over the TEST field. The test consists of sending the following characters:

```
KONTRON LOGIC ANALYZER
ASCII TEST: 1"¢$%&'(),0123456789
THE QUICK BROWN FOX JUMPS OVER THE LAZY DOG!
```

After the interface test is complete and/or you move the blinking cursor out of the TEST field, the field defaults to the setting NONE.

CHAPTER 7

THEORY OF OPERATION

The Logic Analyzer hardware is built up of modular boards, which are independent of the associated microprocessor. The interface to the microprocessor is a general 16-bit parallel interface. The LA hardware consists of four different boards. These are:

- Time Base and clock Qualifier board (TBQ) for clock production and control
- Data Memory Board (DMB) for data recording
- Trigger Sequence controller (SEQ) for trigger sequence control
- Time Measurement Board (TMB) for time measurement (optional)

7.1 LOGIC ANALYZER BOARD FUNCTIONS

The logical function of the boards and their I/O signals is described in this section to simplify understanding of the schematics in Chapter 8. Note that this sections does not explain functions down to the gate level.

In this chapter, the boards will be abbreviated as follows:

TBQ (board 312)
DMB (board 311)
SEQ (board 313)
TMB (board 314)

The designations and signal names in **BOLDFACE** refer to Figure 7-1, or to the schematics in Chapter 8.

7.1.1 MOTHERBOARD (BOARD 316)

The **MOTHERBOARD** has the boards in double Eurocard bus format. There are seven 64-pin connectors on the **MOTHERBOARD**.

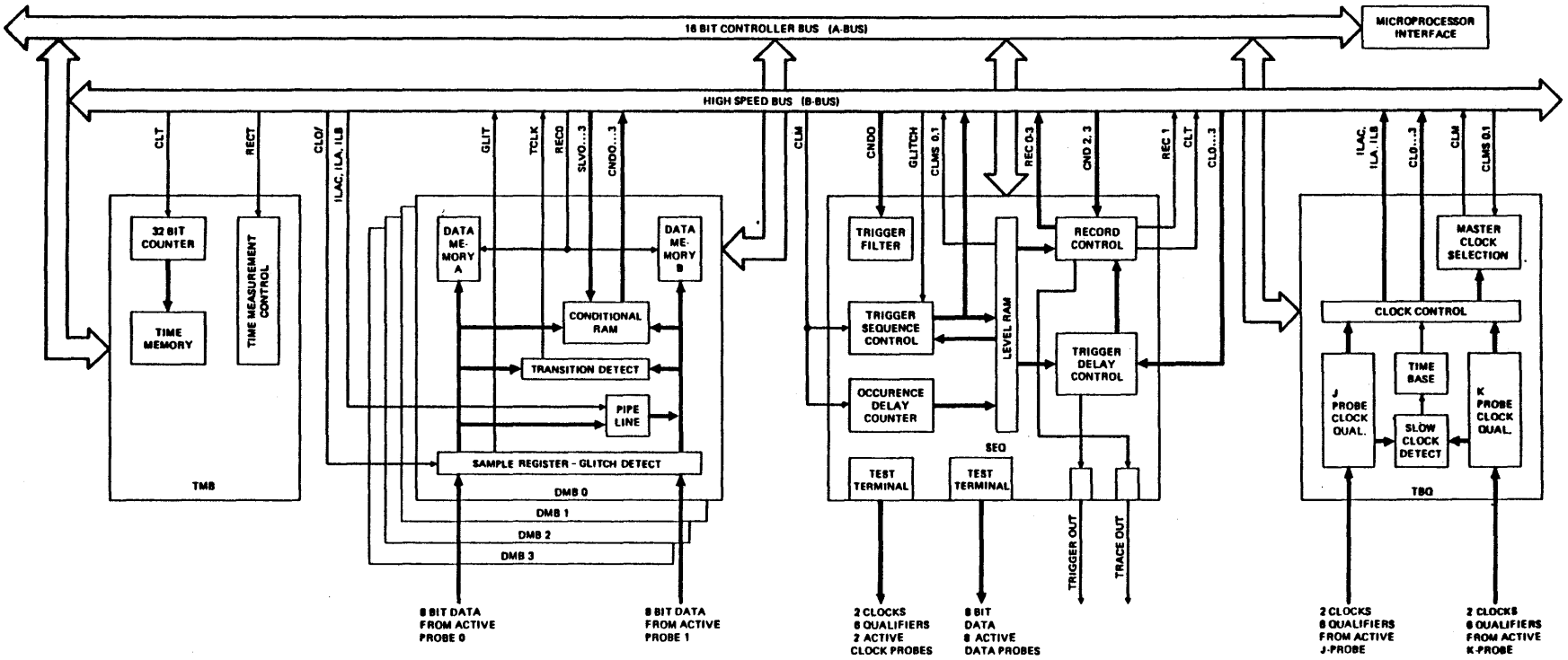

Figure 7-1. Block Diagram of the Logic Analyzer Hardware

The following boards are plugged into the **MOTHERBOARD**:

1	**TBQ** board (312)
1	**SEQ** board (313)
up to 4	**DMB** boards (311)
1	**TMB** board (314)

A bus is assigned to each two connectors. The **A BUS** is a relatively slow TTL bus. The microcomputer has access to all registers and memory of the LA hardware over this bus (controller bus). The **B BUS** is a high speed ECL bus (frequency 100 MHz). During recording or trigger search, communication between boards takes place over this bus.

7.1.2 TIME BASE AND CLOCK QUALIFIER BOARD (TBQ BOARD 312)

The **TBQ** board occupies the uppermost plug position on the **MOTHERBOARD**. This board contains the interface to the microcomputer and the central clock requirement of the LA hardware. Connection to the microcomputer is with a 50-pin flat cable, which is directly plugged into the **TBQ** board.

The **TBQ** board generates clocks either from its internal time base or from external recording clocks.

7.1.2.1 Board Clocks

Each of the four data memory boards (**DMB** board 311) has its own independent board clock, derived from either the internal time base or from external clocks: **CL0**, **CL1**, **CL2**, and **CL3**.

For the trigger delay counter on the **SEQ** board (313), these clocks are available on the following separate circuits: **SCL0**, **SCL1**, **SCL2**, and **SCL3**.

Selection of internal or external clock for the board clocks is through a control register loaded from the microprocessor.

7.1.2.2 Master Clock

The **TBQ** supplies a master clock for the trigger controller (**SEQ** board 313): **CLM**.

Trigger search is executed with this clock. The master clock is selected from one of the four **DMB** clocks. Selection is with two signals from the **SEQ**: **CLMS0**, and **CLMS1**.

7.1.2.3 Time Base

The internal time base supplies a stable quartz clock of 500ms maximum, (2 MHz) to 10ns minimum (100 MHz) in increments of 1, 2, or 5. In addition, two clocks of constant frequency are produced:

CL10 A 10ns clock for processing time measurement on the **SEQ.**

CL100 A 100ns clock for generating test patterns for **PROBE TEST TERMINALS** on the **SEQ.**

7.1.2.4 Interlace Operation

When recording with the maximum time resolution of 10ns, the data memory boards, **DMBs**, must be in Interlace operation. The interlace module supplies three signals for this mode of operation: **ILAC, ILA, and ILB.**

In Interlace operation, **ILAC** blocks the board clock, and the **ILA** and **ILB** clocks are released. **ILA** and **ILB** have half the frequency of the board clock, and are 180 degrees out of synch. Interlace operation is possible only with the internal clock. Two groups of **DMBs** (DMB0 and DMB1, DMB2 and DMB3) can operate independently of each other in Interlace/Non-Interlace operation. These signals can be doubled on the bus:

ILAC1, ILA1, ILB1

ILAC2, ILA2, ILB2

Interlace mode is set through a control register loaded from the microprocessor.

7.1.2.5 External Clocks

Two clock probes can be connected to the **TBQ.** The clock probe is mechanically and electrically identical to the 8-channel **DATA PROBE.** Thus, two clocks and six qualifiers, assigned to these same clocks are brought in with each probe.

The clock probes are designated **J PROBE** and **K PROBE.** The following configuration results:

Probe Bit	J PROBE	K PROBE	Function
0	J0	K0	Clock
1	J1	K1	Clock
2	J-Qual 2	K-Qual 2	Qualifier
3	J-Qual 3	K-Qual 3	Qualifier
4	J-Qual 4	K-Qual 4	Qualifier
5	J-Qual 5	K-Qual 5	Qualifier
6	J-Qual 6	K-Qual 6	Qualifier
7	J-Qual 7	K-Qual 7	Qualifier

The external clocks have a fixed relationship to the board clocks:

J0 = CL0/
J1 = CL1/
K0 = CL2/
K1 = CL3/

Adjacent external clocks can be OR'ed. OR'ing can extend over two, three or all four clocks, and is set with a control register loaded from the microprocessor.

For each external clock, the positive or the negative edge can be qualified independently, with six assigned qualifiers:

Clock	Qualifier
J0	J-Qual 2 to J-Qual 7
J1	J-Qual 2 to J-Qual 7
K0	K-Qual 2 to K-Qual 7
K1	K-Qual 2 to K-Qual 7

Qualification of the clock edges proceeds from the clock qualifier RAM, loaded from the microprocessor.

Period length of the external clocks is checked by the slow clock detection circuit. If period length is longer than 100ms (which is the case if no clock is connected), a flag is set that can be read by the microprocessor.

7.1.3 DATA MEMORY BOARD (DMB BOARD 311)

The data memory boards **DMB** can occupy connector plug positions 3, 4, 5 and 6 on the **MOTHERBOARD.**

The **DMB** contains all circuits for recording and storing 16 data channels, and for obtaining trigger conditions. Depending on the KLA configuration, 2 to 4 **DMBs** are built into each device. Signal designations, which are differentiated only by plug index 0...3, are designated as **XXXn** where n=0...3.

7.1.3.1 Data Input In Non-Interlace Mode

Two 8-channel **DATA PROBEs** can be connected to each **DMB**. Thus, in Non-Interlace operation, a 16-bit wide data stream can be recorded by each **DMB**. In the input register of the **DMB**, the 16 channels are sampled with the board clock **CLn** (up to 50 megasamples/sec maximum) and are stored in the 2K data memory.

7.1.3.2 Data Input In Interlace Mode

In Interlace operation, the channel number of the **DMB** is reduced from 16 bits to 8 bits, but the memory depth is doubled from 2K to 4K. Only the channels of the lower **DATA PROBE** are recorded. The sample rate then can reach 100 megasamples/sec.

Interlace operation is controlled by the **ILACn**, **ILAn**, and **ILBn** signals, which are produced on the **TBQ**.

Interlace operation is only possible with the internal clock.

7.1.3.3 Conditional RAM

While the data stream is being sampled, four independent trigger words can be searched. To do this, the data word sampled is set as the address for the conditional RAM. Output to this conditional RAM is 4-bits wide. Each trigger word searched produces a condition bit: **CND0**, **CND1**, **CND2**, and **CND3**.

The LA hardware has available 16 trigger levels. In each trigger level, another set of four trigger words can be searched. The trigger sequence controller **SEQ** informs the **DMBs**, via four address circuits, of the trigger level in which the search is ongoing at the moment. These four address circuits are: **SLV0**, **SLV1**, **SLV2**, and **SLV3**.

The address circuits **SLV0...3** are additional inputs of the conditional RAM.

The condition bits **CND0...3** are OR'ed on the **B BUS** with the condition bits of the other **DMBs** and passed on to the **SEQ** for evaluation. Only when a condition bit is "true" on all **DMBs** is the condition bit also "true" on the **B BUS**. This means that a trigger word can be recognized in its full width (all channels).

The conditional RAMs are loaded from the microcomputer.

7.1.3.4 Glitch Detector

A glitch is defined as more than one signal transition within a sample period on a data channel.

Glitch mode can be set individually for each **DATA PROBE**. Of the 8 channels of the probe in glitch mode, 4 bits (channels 0, 2, 4, and 6) are used for data recording, and 4 bits are used for storage of glitch information.

In addition, when a glitch appears, the trigger signal **GLIT** is produced, is OR'ed on the **B BUS** with the **GLIT** signals of the other **DMBs**, and is made available to the **SEQ** for evaluation. The **GLIT** signal is always "true" when a glitch appears on any data channel of a **DATA PROBEs** operating in glitch mode.

Glitch mode is possible only in Non-Interlace operation.

7.1.3.5 Transition Detector

The transition detection mode can be set individually for each **DATA PROBE**. During transition detection, all 8 channels of the **DATA PROBE** are monitored for data transition.

If a transition appears on one or more channels, the signal **TCLK** is produced. On the **B BUS**, it is OR'ed with the **TCLK** signals of other **DMBs** and is made available to the **SEQ** for evaluation. The **TCLK** signal is always "true" when a transition appears on any channel of a **DATA PROBE** operating in transition detect mode.

7.1.3.6 Record Control

Acceptance of the data sampled in the input register into data memory can proceed in three types of recording:

1. Normal Recording
2. Data Qualified Recording
3. Transition Recording

Acceptance is controlled dynamically by the **RECn** signal. **RECn** can be produced individually for each **DMB** by the record controller on the **SEQ**. In Normal Recording, **RECn** is "true" during the entire recording. After the trigger delay counter has run on the **SEQ**, the recording is blocked when **RECn** is false. Normal Recording is possible in both Interlace and Non-Interlace operation.

In Data Qualified and Transition Recording modes, **RECn** is true during the recording, only if data qualification or a transition appears. Then, the sampled data will be taken into data memory. Completion of the recording is the same as for Normal Recording.

Data Qualified Recording and Transition Recording are possible only in Non-Interlace operation.

7.1.3.7 Data Memory

The data memory on the **DMB** is organized in two groups, each 8-bits wide and 2K deep.

In Non-Interlace operation, both groups operate in parallel. Cycle time is determined by the board clock **CLn**, and will operate up to 20ns. The data memory is configured for a 16 channel x 2K memory, with a maximum sample rate of 50 megasamples/sec.

In Interlace operation, both groups operate 180 degrees out of phase, with a minimum cycle time of 20ns each. The **ILAn** and **ILBn** clocks control the memory. Inputs of both groups are switched in parallel. The data memory is configured for an 8 channel x 4K memory with a maximum sample rate of 100 megasamples/sec.

7.1.4 TRIGGER SEQUENCE CONTROLLER BOARD (SEQ BOARD 313)

The trigger sequence controller **SEQ** occupies the second connector from the top on the **MOTHERBOARD**.

The **SEQ** has central control of the trigger search and recording of measurement data on the **DMSs**. The **SEQ** contains the following two blocks:

1. Sequence controller
2. Record controller

Control of the **SEQ** proceeds from conditions produced by the **DMB**.

All reactions and decisions of the **SEQ** are made by the master clock **CLM**, which is provided by the **TBQ**.

In addition, outputs for **TRIGGER** and **TRACE** and test terminals for the **DATA PROBES** and **CLOCK PROBES** are installed on the **SEQ**.

7.1.4.1 Sequence Controller

The sequence controller function block consists of:

1. Trigger filter
2. Occurrence counter
3. Level counter
4. Level change control
5. Level RAM

The sequence controller reacts at the time of the master clock to the signals: **CND0**, **CND1**, and **GLIT**.

The sequence controller checks trigger search in 16 physical trigger levels maximum.

The condition bit **CND0** increments the trigger level.

The condition bit **GLIT** alternates with **CND0**. **GLIT** can be released for each trigger level individually in software using the signal **GLITEN** from the level RAM.

The condition bits **CND0** and **CND1** are monitored in each trigger level simultaneously. If they appear simultaneously, **CND1** has priority over **CND0**. Then, an unconditional jump to another trigger level is executed (see section 7.1.4.4).

The signals **NOT0** and **NOT1** from level RAM enable the inversion of the condition bits **CND0** and **CND1**. This can control trigger search using the absence of a trigger word ("IF WORD1 NOT TRUE").

7.1.4.2 Trigger Filter

Time validity of the condition bits **CND0** and **CND1** is evaluated by the trigger filter. The user can set the system so that a condition bit between 1 and 15 master clocks **C/M** must be constantly true before it is accepted for the duration of a master clock period. This suppresses triggering on glitches.

The trigger filter can be set for each trigger level and is stored in the level RAM. The function of the trigger filter can also be turned on or off separately in each instruction level with the signals **FIL0EN** and **FIL1EN** from level RAM.

With the signal **CND0**, the trigger filter has a dual function. As described in section 7.1.4.3, **CND0** is used for counting both delays and occurrences. When counting delays, **CND0** is constantly "true". The trigger filter is then switched off, and counting is continuous with the master clock **CLM**.

When **CND0** is counting occurrences, the trigger filter is switched on. This utilizes the trigger filter to validate signal durations before they are accepted as signals. If **CND0** is constantly "true" for the set number of master clocks **CLM**, further processing is released for one master clock period, and then triggering is blocked. **CND0** must be first false and then true in order to restart the trigger filter. **CND0**="true" can only allow triggering once per occurrence.

The signal **EDGEN** from level RAM can cause the condition bits **CND0** and **CND1** to be evaluated only when they change from false to true. A condition bit that is true when a level is entered is then passed on for processing.

7.1.4.3 Occurrence Counter

After the trigger filter processes the condition bits **CND0** and **CND1**, **CND0** goes through another processing in the occurrence counter.

The occurrence counter is a loadable 16-bit/100 MHz synchronous counter. The condition bit **CND0** is only released for further processing when the occurrence counter has counted the set number of **CND0** samples that can be preprocessed.

The occurrence counter can be used in two operating modes:

1. Delay counter mode
2. Occurrence counter mode

In the delay counter mode, the trigger filter is turned off and **CND0** is constantly true. The occurrence counter thus counts the set number of **CLM** periods and then releases **CND0** as the signal **NXTLV**, for incrementing the level counter (corresponds to incrementing the trigger level).

In occurrence counter mode, the trigger filter is turned on. The occurrence counter counts off the set number of events with the preprocessed condition bit **CND0**, and then releases the level counter for incrementing with the signal **NXTLV**. An occurrence is defined as the single appearance and disappearance of a trigger condition.

7.1.4.4 Level Counter

The level counter is a loadable 4-bit counter. Its outputs represent the level address of the trigger level. There are 16 physical trigger levels. Complex trigger instructions such as, "IF WORD1 OCCURS BETWEEN n AND m CLOCKS THEN..." can reduce the available levels down to a minimum of 5, depending on the complexity of the instruction levels.

The level address is set on the B BUS in the form of the signals: **SLV0, SLV1, SLV2,** and **SLV3,** and made available to the **DMSs.** The **DMSs** can execute trigger word search depending on the trigger level. In addition, level RAMs on the **SEQ** can be controlled by level addresses (see 7.1.4.6).

The **TRIGGER-LEVEL-ADDRESS LV0, LV1, LV2,** and **LV3** at plug E on the **SEQ** is executed in the TTL level. It is needed for the 8086 disassembler and for test purposes.

The level counter can execute two operations:

1. Increment
2. Jump

Incrementing the level counter is released by the condition bit **CND0,** which is preprocessed in the trigger filter and the occurrence counter.

Jumping to any other level is executed by loading a destination address. The jump is released by the condition bit **CND1** preprocessed in the trigger filter. The destination address is stored in the level RAM, and can be set individually for each trigger level.

7.1.4.5 Level Change Control

When the level counter is changed by incrementing or jumping, the level change control checks and ensures that the trigger word search begins in a defined way in the new trigger level. To accomplish this, the following tasks are executed and described in the following paragraphs:

1. Disable condition bits
2. Load occurrence counter
3. Reset trigger filter

Disable Condition Bits: The level change control produces a 30ns wide pulse that blocks the condition bits **CND0** and **CND1** for the duration of the level change. The level counter is blocked from registering glitches, which could originate on the **DMBs** condition circuits during the level change of the condition RAM.

Load Occurrence Counter: The load signal **OCCLD** and the clock pulse **CLOCC** are produced about 30ns after the level change begins, and they load the occurrence counter with a preset value in the new trigger level. By this time, the new value of the occurrence counter from the level RAM is already stable.

Reset Trigger Filter: The trigger filter is reset during a level change by disabling the condition bits and the additional clock pulse. Thus, a trigger word in the new trigger level can be recognized as quickly as 40ns after the beginning (rising edge of the master clock **CLM**) of the level change.

7.1.4.6 Level RAM

The level RAM is controlled by the level address of the level counter. In the level RAM, all the parameters that can be set for the trigger word search are stored. These can be set for a trigger word search, depending on level (with the exception of trigger words in the conditional RAMs on the **DMBs**). The following parameters are contained on each trigger level:

- 4-bit destination with which the level counter is loaded during a jump.
- 16-bit value for occurrence counter.
- 4-bit value for trigger filter.
- **FIL0EN** enables/disables trigger filter for **CND1**.
- **FIL1EN** enables/disables trigger filter for **CND1**.
- **TRANSEN** controls Transition Recording mode, see 7.1.4.8.
- **GLITEN** releases **GLIT** alternately to **CND0**, see 7.1.4.1.
- **CLMS0**, **CLMS1** selects master clock **CLM**, see 7.1.2.2.
- **TRG**=final trigger. This signal indicates finding of last trigger condition in a trigger sequence. Trigger search is interrupted. Only the trigger delay counters run, and at the end of trigger delay, recording is blocked.
- **NOT0**, **NOT1**, **NOT2**, and **NOT3** inverts condition bits **CND0**, **CND1**, **CND2**, and **CND3**.
- **EDGEN** frees the edge trigger.

7.1.4.7 Record Controller

The record controller function block consists of the following modules:

1. Record module
2. Trigger delay counter
3. Time measurement control

The record controller processes the condition bits produced by the DMBs: CND2, CND3, and TCLK. From these condition bits, the record controller generates the signal RECORD in the record module. From this RECORD signal, the trigger delay counter module generates separate, independent recording signals for each DMB: REC0, REC1, REC2, and REC3.

The signals NOT2 and NOT3 from level RAM can cause the condition bits CND2 and CND3 to be inverted. This makes it impossible to interrupt the recording when a certain word is found.

7.1.4.8 Record Module

With the record module, four different recording modes can be checked:

1. Normal Recording
2. Data Qualified Recording
3. Transition Recording
4. Level Selected Recording

Except for Transition Recording, recording in the other three modes is controlled by the condition bits CND2 and CND3. CND2 and CND3 are equally weighted and are OR'ed in the record module. Therefore, a recording will be released if only one of the two condition bits is "true".

For Transition Recording, only TCLK is used to release recording. CND2 and CND3 are blocked by software.

Normal Recording: In this mode, one of the two condition bits CND2 or CND3 is constantly "true". Thus, the record signal RECORD is also constantly "true" and recording is continuous. This recording mode is possible at all clock rates in Interlace and Non-Interlace operation.

Data Qualified Recording: In this mode, the condition bits CND2 or CND3 are only "true" when the data sampled on the DMBs agree with the preset trigger words. Thus, recording occurs (RECORD is "true") only when certain data are qualified by trigger words for CND2 or CND3. This function can be reversed by using NOT2 and NOT3 -- that is, RECORD is "false" when certain words are qualified. This recording mode is possible with an internal as well as an external clock, with scan period of at least 20ns (only in Non-Interlace operation).

Transition Recording: In this mode, recording proceeds only when the TCLK signal is produced by a data change in the transition detector on the DMB (see 7.1.3.5). This recording mode is only possible in Non-Interlace operation, and with a sample rate of 20ns.

Level Selected Recording: This mode is software controlled, and is above the previous modes in rank, because it has control over the selection of the other types of recording. It allows "NO RECORDING IN THIS LEVEL" for all levels in order to suppress the recording of irrelevant data. For Data Qualified Recording, it also allows other data to qualify for recording in every trigger level. Control for Normal Recording and Data Qualified Recording proceeds by loading the appropriate condition RAMs on the **DMBs**. Transition Recording is controlled by the **TRANSEN** signal from the level RAM.

7.1.4.9 Trigger Delay Counter

From the **RECORD** signal generated from the record module, the trigger delay counter module produces an individual recording signal for each of the four **DMBs**: **REC0**, **REC1**, **REC2**, and **REC3**.

The trigger delay counter also determines the position of the trigger point in the recorded data. After the final trigger is recognized (**TRG** is "true", see 7.1.4.6), the trigger delay counter blocks the signals **REC0**, **REC1**, **REC2**, and **REC3** after a preset number of samples has run, thus blocking the recording of data on the **DMBs**. This preset number of samples is the trigger delay setting. The delay can be set from 0 to 65535. The trigger delay counter is set via a register that the microprocessor can load.

The trigger delay counter consists of four 12-bit counters. A counter is available to control each **DMB**. This is necessary, since each **DMB** can record with its own clock rate, independently of the other **DMBs**.

If the board clocks are asynchronous with each other, the only time reference point is the trigger point of the data recorded on the various **DMBs**. The number of recorded samples after the trigger point is the same for all **DMBs**, although the individual counters block the **RECn** at various times.

In Normal Recording, the trigger delay counter continuously counts the set number of samples.

In the Data Qualified and Transition Recording, the trigger delay counter only counts if a **RECORD** signal produced by the record module is present.

If a counter has run out, a bit is set in a register. This register can be read out by a microprocessor.

In the trigger delay module, there is also a register that allows the LA to operate in mixed recording modes. This register can switch the **RECn** signal for each **DMB** individually into Normal Recording, although other DMBs are recording in Data Qualified, Transition, or Level Selected Recording modes.

7.1.4.10 Time Measurement Control

The LA offers the Time Measurement board **TMB** as an option. To control this board, the time measurement control generates a clock and a control signal: **CLT** and **RECT**.

Time measurement control can operate in two modes:

1. Time measurement
2. Clock counting

Time Measurement: In this mode, the clock **CLT** is derived from the clock **CL10** by the **TBQ**. It has a period length of 10ns. The control signal **RECT** is a 10ns wide pulse that is always produced when the internal record signal **RECORD** is "true" at the time of the rising edge of the master clock **CLM**. With these signals, the **TMB** can measure the times between two recordings, when in Data Qualified or Transition Recording modes. For Level Selected Recording, the interval between two recorded data blocks is measured when "NO RECORDING IN THIS LEVEL" is set. In Normal Recording with an external clock, the period length of this clock is measured when it is selected as the master clock. The measurement resolution amounts to 10ns. The maximum interval that can be captured is 42.95 sec.

Clock Counting: In this mode, **CLT=CLM**. The control signal **RECT** corresponds to the internal record signal **RECORD**. With these signals, the **TMB** can count the number of master clocks **CLM** between two recordings, when in Data Qualified or Level Selected Recording modes.

7.1.4.11 Outputs

The **SEQ** has the following TTL level signals on BNC plugs for external communication:

1. Trigger
2. Trace
3. Trigger-level-address

Trigger: The rising edge of this signal marks the time point of the final trigger; that is, the last trigger condition in a trigger sequence is satisfied.

Trace: This signal corresponds to the internal **RECORD.** A positive level indicates that data has been found. In Normal Recording, the entire recording period is marked this way. In Data Qualified Recording, it signals that qualified trigger words have been found. In Transition Recording, it announces the appearance of a data transition.

Trigger-level-address: The physical address of the currently valid trigger level is available at the four leads **LV0, LV1, LV2,** and **LV3.**

Besides this, the **SEQ** has two terminals for self-test of:

1. Data probes
2. Clock probes

These terminals serve as data or clock sources for the probes. To execute the self-test, the **DATA PROBEs** only need to be connected to a **DMB** and the **CLOCK PROBEs** to the **TBQ.** The self-test checks not only probes, but also the input portion of the connected board at the same time.

Data Probe Test Terminal: For **DATA PROBEs,** the outputs of an 8-bit BCD counter (data pattern 00 to 99) are produced at ECL levels. The counter is incremented every 100ns with the **CL100** clock supplied by the **TBQ.**

Clock Probe Test Terminal: For **CLOCK PROBEs,** the **CL100** clock is output at ECL levels on bits 0 and 1 of the terminal. The **CL100** clock has a period length of 100ns (40ns=high, 60ns=low). The same pattern appears on bits 2...7 of the terminal as on bit 0...5 of the data probe test terminal.

7.1.5 TIME MEASUREMENT BOARD (TMB BOARD 314)

The optional Time Measurement board **TMB** occupies the lowest connector on the **MOTHERBOARD.**

The **TMB** measures time intervals, for counting clock intervals between the previous and current recording in Data Qualified, Transition, and Level Selected Recording modes. The **TMB** contains the following two function blocks:

1. Time counter
2. Time memory

Control of the **TMB** is via the clock **CLT** and the signal **RECT,** which is produced on the **SEQ** in time measurement control.

7.1.5.1 Time Counter

The time counter consists of a 32-bit synchronous counter with a counting frequency of 100 MHz maximum. The clock for this counter is **CLT**. For clock counting, **CLT=CLM**. For time measurement, **CLT=10ns**. For this clock period of 10ns, the largest measurable interval between two recordings is 42.95 sec. If this is exceeded, the counter begins again at zero.

The most significant four bits of the counter are displayed. The toggle rate of the most significant bits is 20.475 sec (for clock rate of 10ns).

The clock is reset when the signal **RECT** is "true".

7.1.5.2 Time Memory

The time memory is 32-bit x 2K or 8K memory with a cycle time of 20ns. The counter status of the time counter is stored in time memory when the signal **RECT** is "true". If **RECT** is true more often than every 20ns during a time measurement, another recording of the counter status will not take place, since the last memory cycle is not concluded yet. In this case, **RECT** is ignored.

7.2 DATA PROBES (BOARD 410)

The **DATA PROBE** has 8 channels available to it. It is a universal probe and can be used as a **DATA PROBE** or a **CLOCK PROBE**.

When used as a **DATA PROBE**, 8-bit data are gathered.

When used as a **CLOCK PROBE**, bits 0 and 1 are input as clock, and 2...7 are clock qualifiers (see 7.1.2.5).

The data is conducted to the probes via a probe terminator. It consists of a 16-pin plug, which is inserted into the probe, and 9 resistor color-coded cables connected to it (8-bit data and 1 GND). The cables end in female wire wrap connectors; the data circuits are equipped with 100 Ohm serial resistors to suppress noise. The female wire wrap connectors can be placed directly onto the wire wrap pins or into the Hirschmann Factory test clips ("grabbers").

The probe's input amplifiers are manufactured in hybrid technology and have an input resistance of 1 MegOhm, an input capacitance of 5 pF, and a bandwidth of 350 MHz. The input amplifier functions as an impedance transformer and forms the difference between the input signal and the threshold.

The threshold is produced directly in each probe by an 8-bit D/A converter. This 8-bit word is transmitted serially by the signals **DP** (data) and **CLP** (clock). The threshold can be set in increments of 100 mV from +12.7V to -12.7V.

The output signal of the input amplifier is checked in an ECL comparator, and transmitted on a round cable with a controlled impedance.

7.3 DISASSEMBLER HARDWARE

The general philosophy of disassembly is to sample the microprocessor with a high impedance using a variable threshold. This means that individual processor pins must be directly connected to the probes. The flexible structure of the LA hardware allows the necessary demultiplexing and selective recording for most microprocessors, without additional hardware. Only a rewiring of processor pins is necessary. Connection of the **DATA PROBEs** is through the following disassembler hardware components:

1. Universal probe rack
2. Configuration modules
3. Test adapters

Note that disassembler software is processor-specific.

7.4 UNIVERSAL PROBE RACK

The universal probe rack (UPR) is a screw-in rack for probes. These are plugged into a motherboard in the **UPR**, which connects the individual probe channels on two 64-pin, edge connectors.

UPR-6 for 6 probes
UPR-10 for 10 probes

UPR-6: The connector accepts 5 **DATA PROBEs** and 1 **CLOCK PROBE**, which is sufficient to connect 40-pin processors. The motherboard for the **UPR-6** is board 374.

UPR-10: The connector accepts 8 **DATA PROBEs** and 2 **CLOCK PROBEs**, which is sufficient to connect 64-pin processors. The motherboard for the **UPR-10** is board 385.

The pin assignments for the 64-pin sockets is the same for both. The **UPR-6** lacks the connections for 3 **DATA PROBEs** and 1 **CLOCK PROBE**.

7.5 REGISTER ASSIGNMENT

All LA hardware is set via registers. The address of these registers is constructed of board address (for the DMBs plug-specific), and the register read/write address. The address given in the register assignment is complete.

The various memories on the boards are also treated like registers. They behave like registers of a definable depth. The address pointers of the memories are set either with reset or load.

The registers are differentiated as follows:

read-only register RO
write-only register WO
read/write register RW

The register address for read-only register and write-only register is handled independently. That is, the same address for RO and WO refer to completely different registers. For RW the same read and write address is used.

There are differences in the time access of the microprocessor to the register:

access anytime
access (only when the LA is) disarmed

The logical polarity of the control bits indicated in the register assignment corresponds to the logical polarity of the bits output or received by the microprocessor.

CHAPTER 8

SCHEMATICS

TRIGGER SEQUENCE OUTPUT

Sequence Level	Output Value (Hex)
1	0
2	1
3	2
4	3
5	4
6	5
7	6
8	7
9	8
10	9
11	A
12	B
13	C
14	D
TRIGGER (15)	E

Ten-pin connector, as viewed from rear of LA:

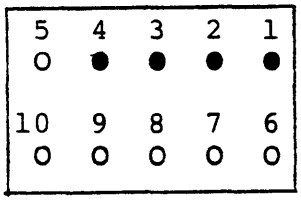

Pins 4-1 represent the output value as a binary number, with Pin 4 the MSB.

PRINTER PORT

The same connector is employed for either a serial printer or a parallel printer. Pin assignments are as follows:

Parallel Printer

Pin	Function	Pin	Function	Pin	Function
1	GND	10	Direction B	18	Data Bit 2
2	Data Bit 6	11	IPRIME	19	Data Bit 0
3	Data Bit 5	12	Strobe	20	Select
4	Data Bit 4	13	Vcc +5V	21	Busy
5	BRDY	14	GND	22	Empty
6	GND	15	Data Bit 7	23	Fault
7	ARDY	16	Data Bit 3	24	BSTRB
8	ASTR	17	Data Bit 1	25	Spare out
9	GND				

Serial Printer

Pin	Function
3	Send Data
4	Clear to nSend (CTS)
5	Data Terminal Ready (DTR)
6	Request to Send (RTS)
7	GND
20	Data Set Ready (DSR)

-- Unlisted pins must not be used.

PARALLEL PRINTER CABLE

The diagram below indicates pin connections between the LA and an Okidata Microline printer. Users may construct their own cables from a knowledge of the pinouts for the LA (previous page) and the printer.

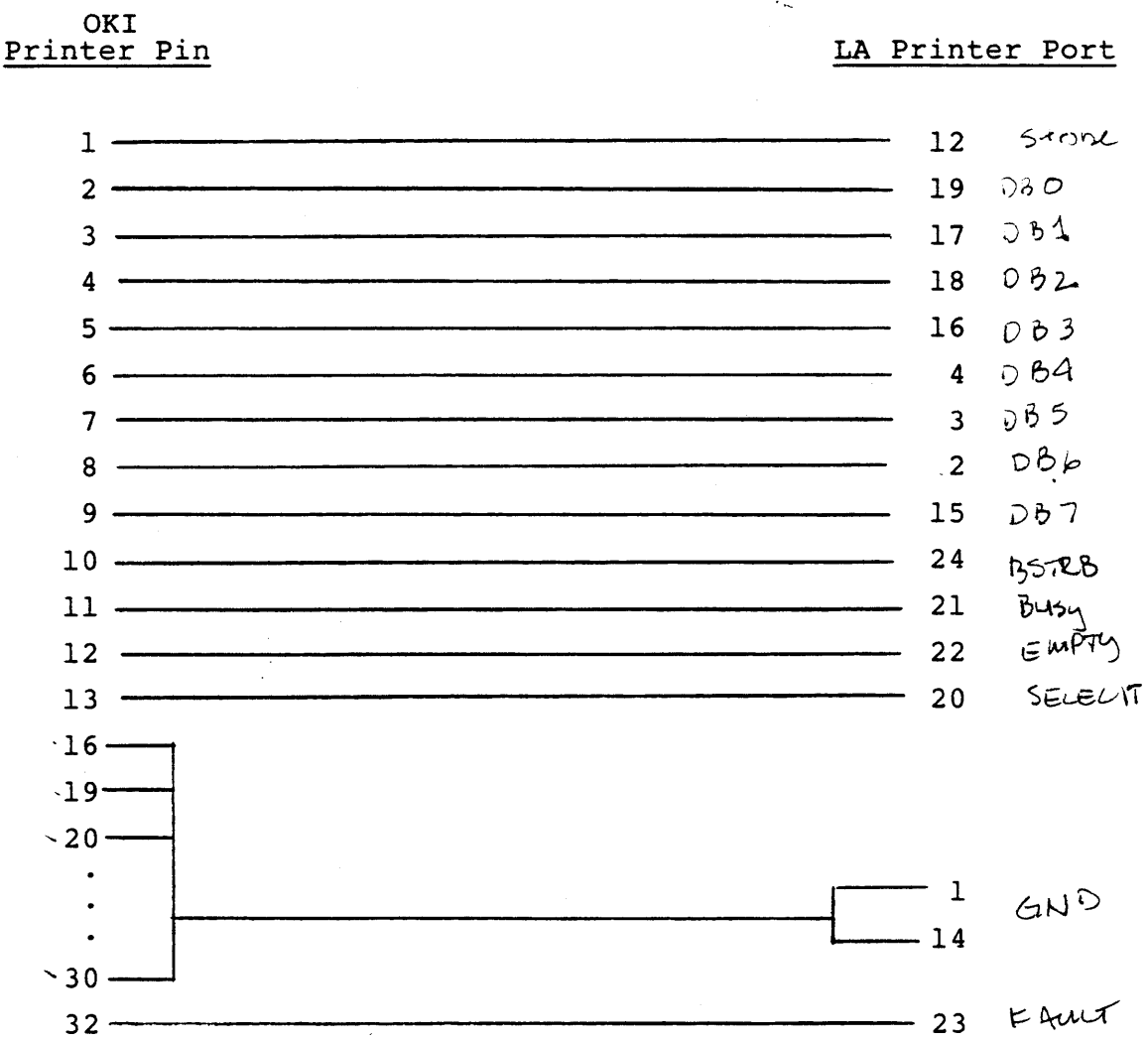

Unlisted pins are not connected.

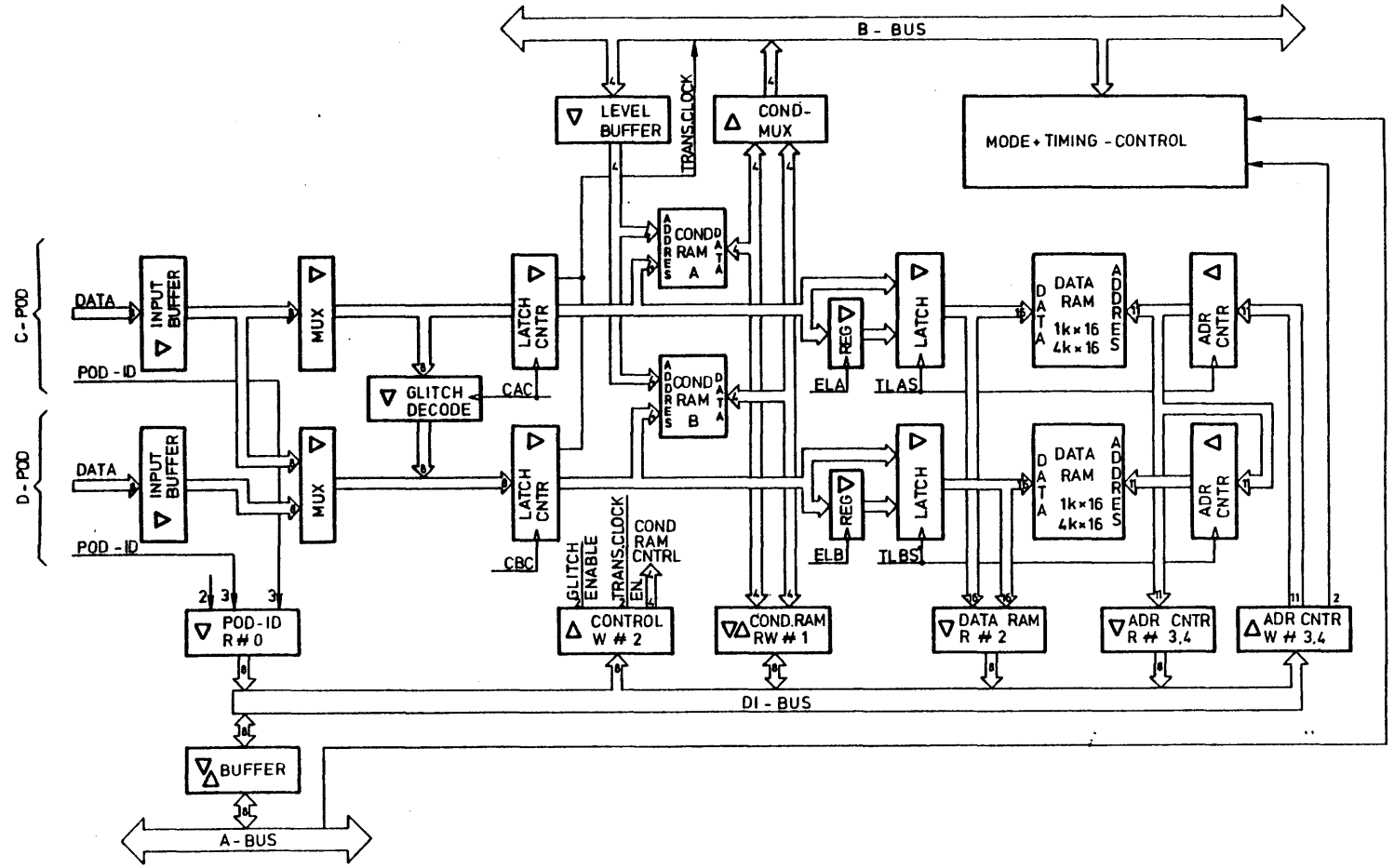

					Tag	Name
				Bearb	10.7.81	Hänsel
				Gepr	27.1.82	HÜBNER
3.1						
1.5	152	16.7.82				
1.4	142	23.3.82				
1.2		27.1.82				
Rev.	Änderungs-Nr.	Tag	Name			

KONTRON ELECTRONIC

Benennung

KLA-DMB DATA-MEMORY-BOARD

Zeichn.-Nr 311

Blatt-Nr

zu Gerat | zu Anlage

EE 07 80

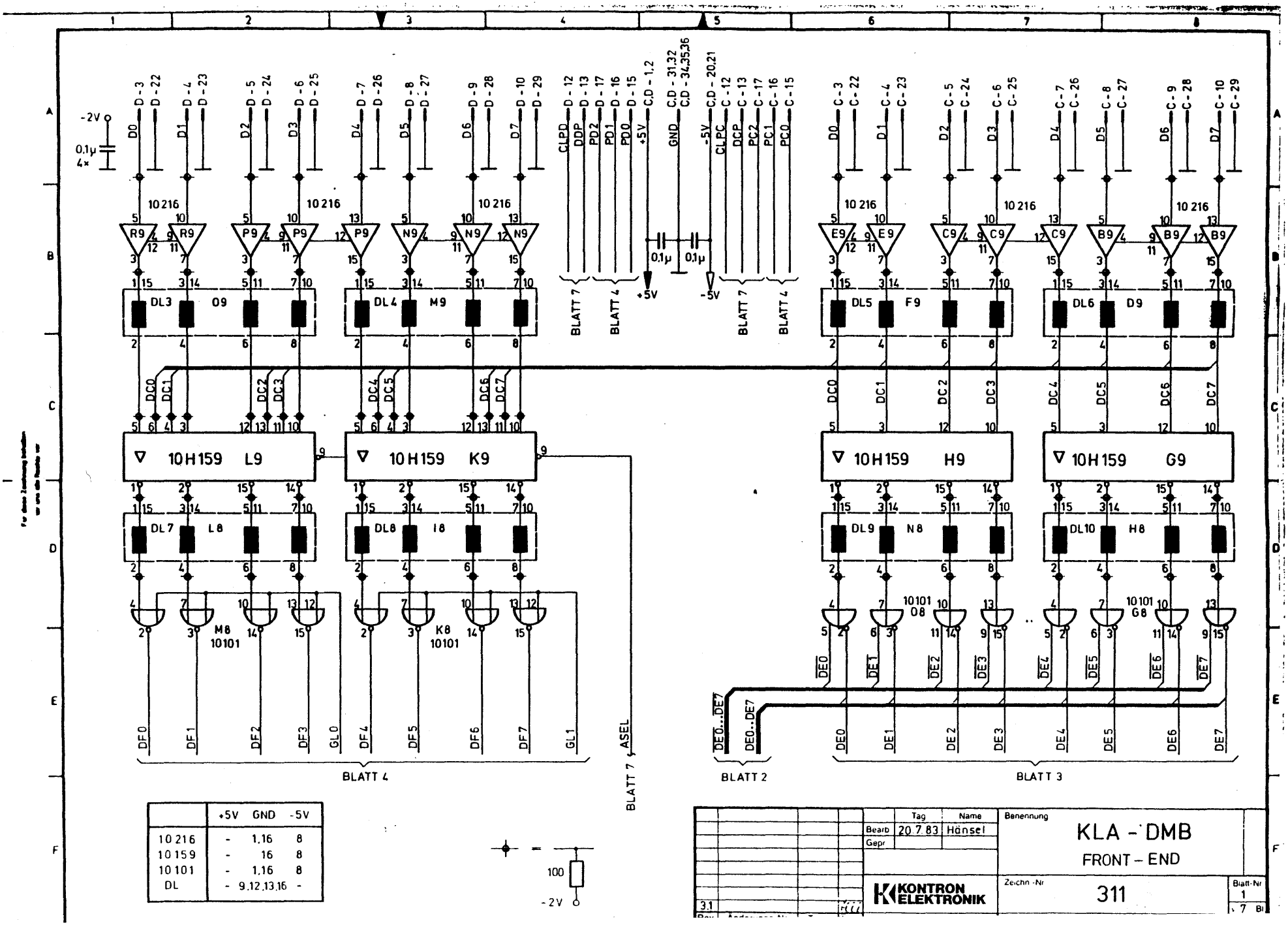

	+5V	GND	-5V
10 216	-	1,16	8
10 159	-	16	8
10 101	-	1,16	8
DL	-	9,12,13,16	-

	Tag	Name
Bearb	20 7 83	Hänsel
Gepr		

Benennung

KLA - DMB

FRONT - END

KONTRON ELEKTRONIK

Zeichn.-Nr 311

Blatt-Nr 1

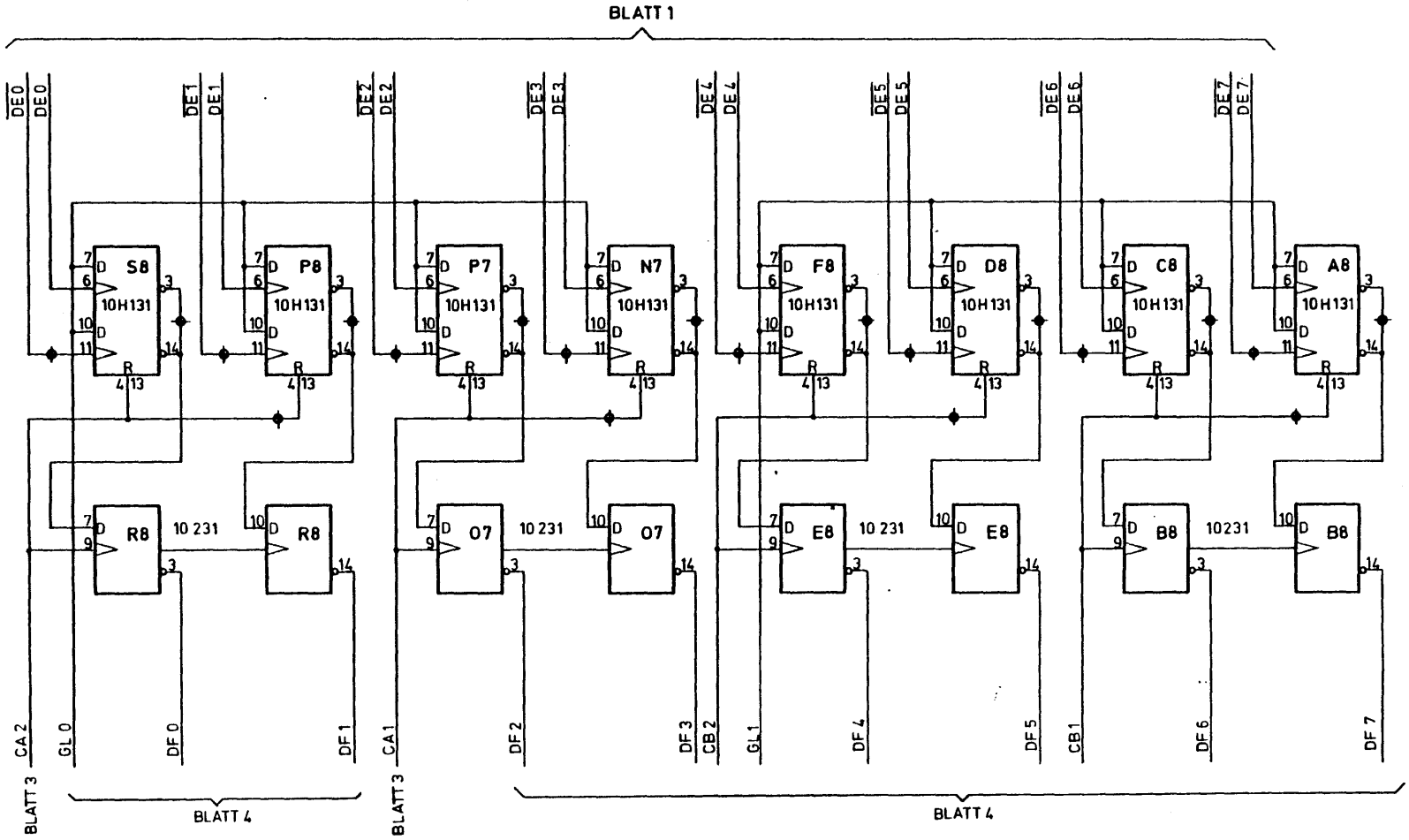

	+5V	GND	-5V
10 H 131	-	16,1	8
10 231	-	16,1	8

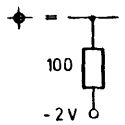

	Tag	Name
Bearb	25.7.83	Hänsel
Gepr		

KONTRON ELEKTRONIK

Benennung: KLA - DMB
GLITCH - LATCH

Zeichn.-Nr: 311

Blatt-Nr: 2

Rev	Änderungs-Nr	Tag	Name
3.1			

zu Gerät | zu Anlage

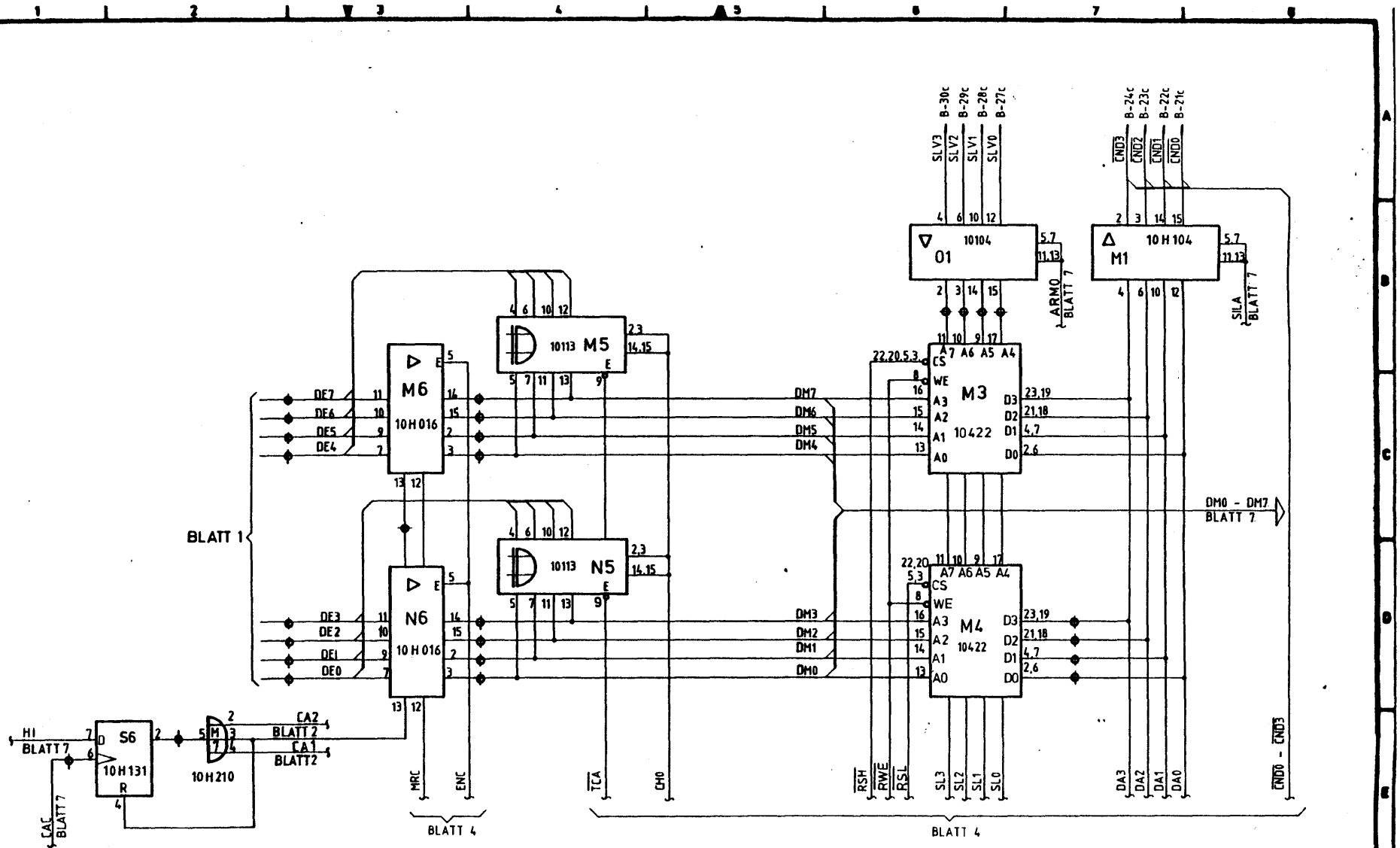

	GND	-5V
10H016	1,16	8
10H104	1,16	8
10 113	1,16	8
10H131	1,16	8
10 422	1,24	12
10H210	1,16,15	8

Rev	Änderungs-Nr.	Tag	Name
3.1			
1.5	152	16.7.82	
1.4	142	23.3.82	
1.2		27.1.82	

	Tag	Name
Bearb	14.5.81	Hänsel
Gepr.	20.1.82	HÜTTNER

KONTRON ELECTRONIC

Benennung: KLA - DMB
CONDITION RAM-A

Zeichn.-Nr.: 311

Blatt-Nr.: 3 v 7 Bl

zu Gerät | zu Anlage

EE-07 80

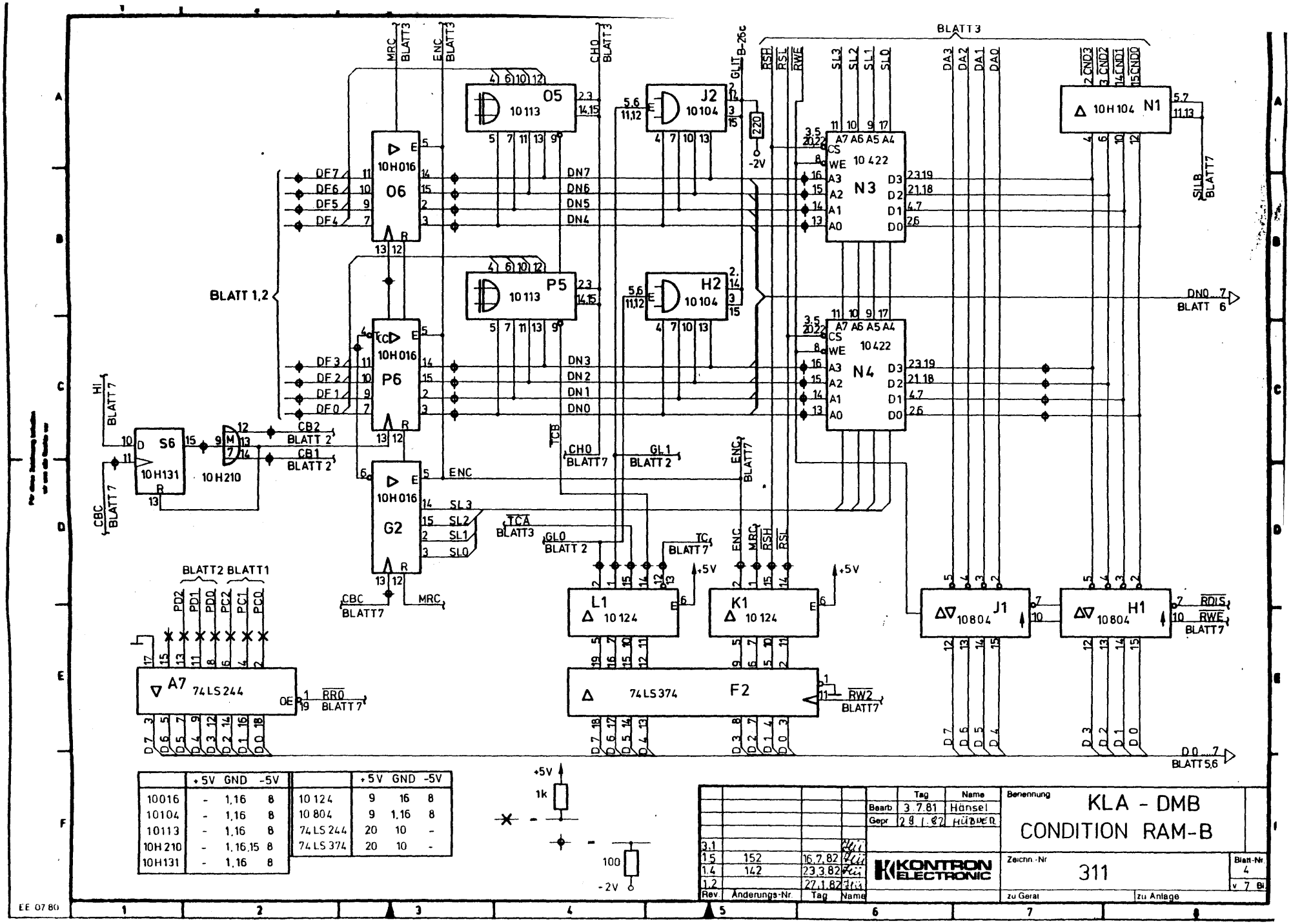

	+5V	GND	-5V	
10016	-	1,16	8	
10104	-	1,16	8	
10113	-	1,16	8	
10H 210	-	1,16,15	8	
10H131	-	1,16	8	

	+5V	GND	-5V
10 124	9	16	8
10 804	9	1,16	8
74 LS 244	20	10	-
74 LS 374	20	10	-

Rev.	Änderungs-Nr.	Tag	Name
3.1			
1.5	152	16.7.82	
1.4	142	23.3.82	
1.2		27.1.82	

	Tag	Name
Bearb	3.7.81	Hänsel
Gepr	29.1.82	HÜBNER

KONTRON ELECTRONIC

Benennung: KLA - DMB
CONDITION RAM-B

Zeichn.-Nr: 311

Blatt-Nr: 4 v 7 Bl

zu Gerät | zu Anlage

EE 07 80

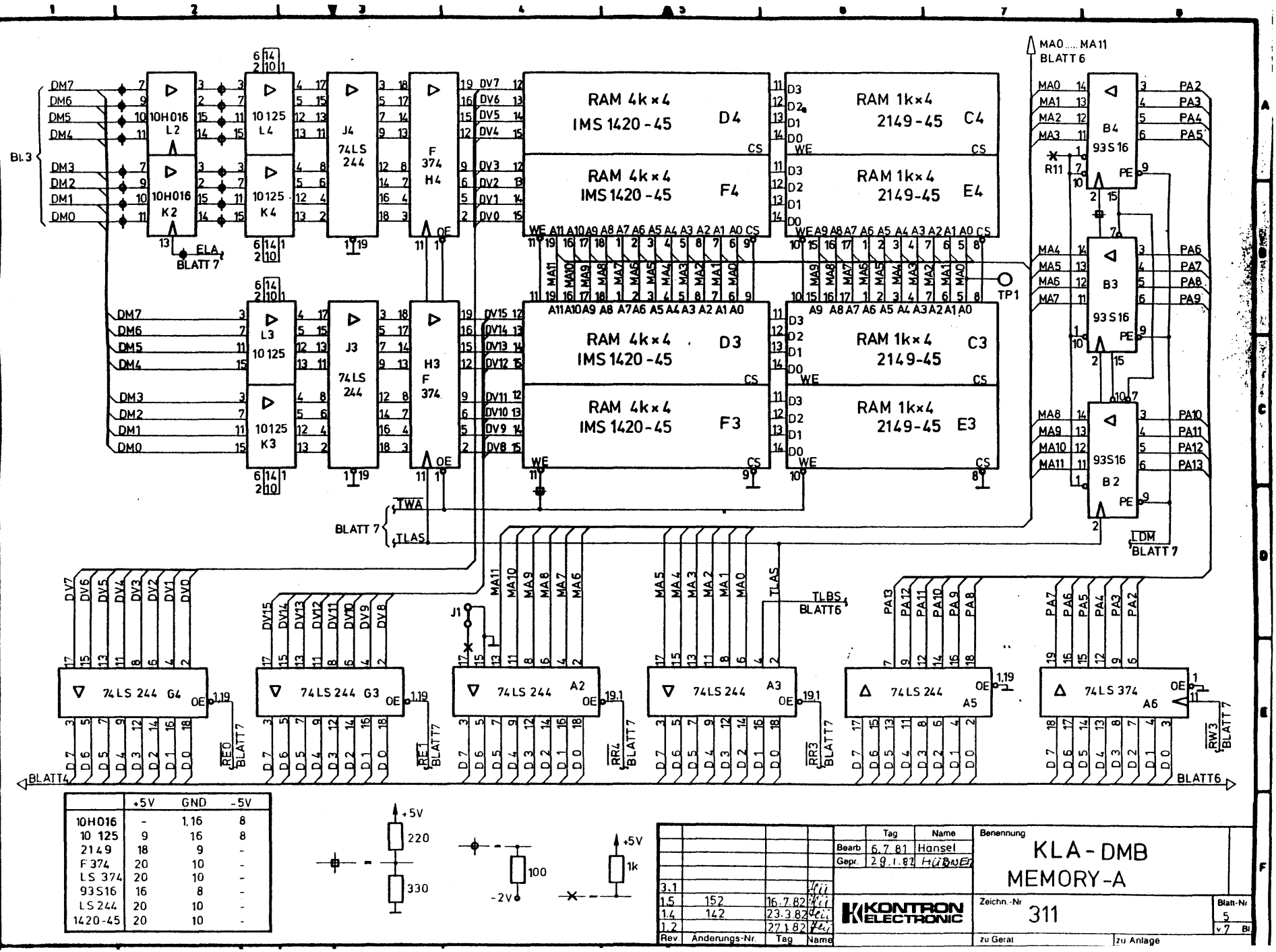

	+5V	GND	-5V
10H016	-	1.16	8
10 125	9	16	8
2149	18	9	-
F 374	20	10	-
LS 374	20	10	-
93S16	16	8	-
LS 244	20	10	-
1420-45	20	10	-

Rev	Änderungs-Nr	Tag	Name
3.1			
1.5	152	16.7.82	
1.4	142	23.3.82	
1.2		27.1.82	

	Tag	Name
Bearb	6.7.81	Hansel
Gepr.	29.1.82	Hübner

KONTRON ELECTRONIC

Benennung: KLA-DMB MEMORY-A

Zeichn.-Nr: 311

Blatt-Nr: 5

zu Gerät | zu Anlage

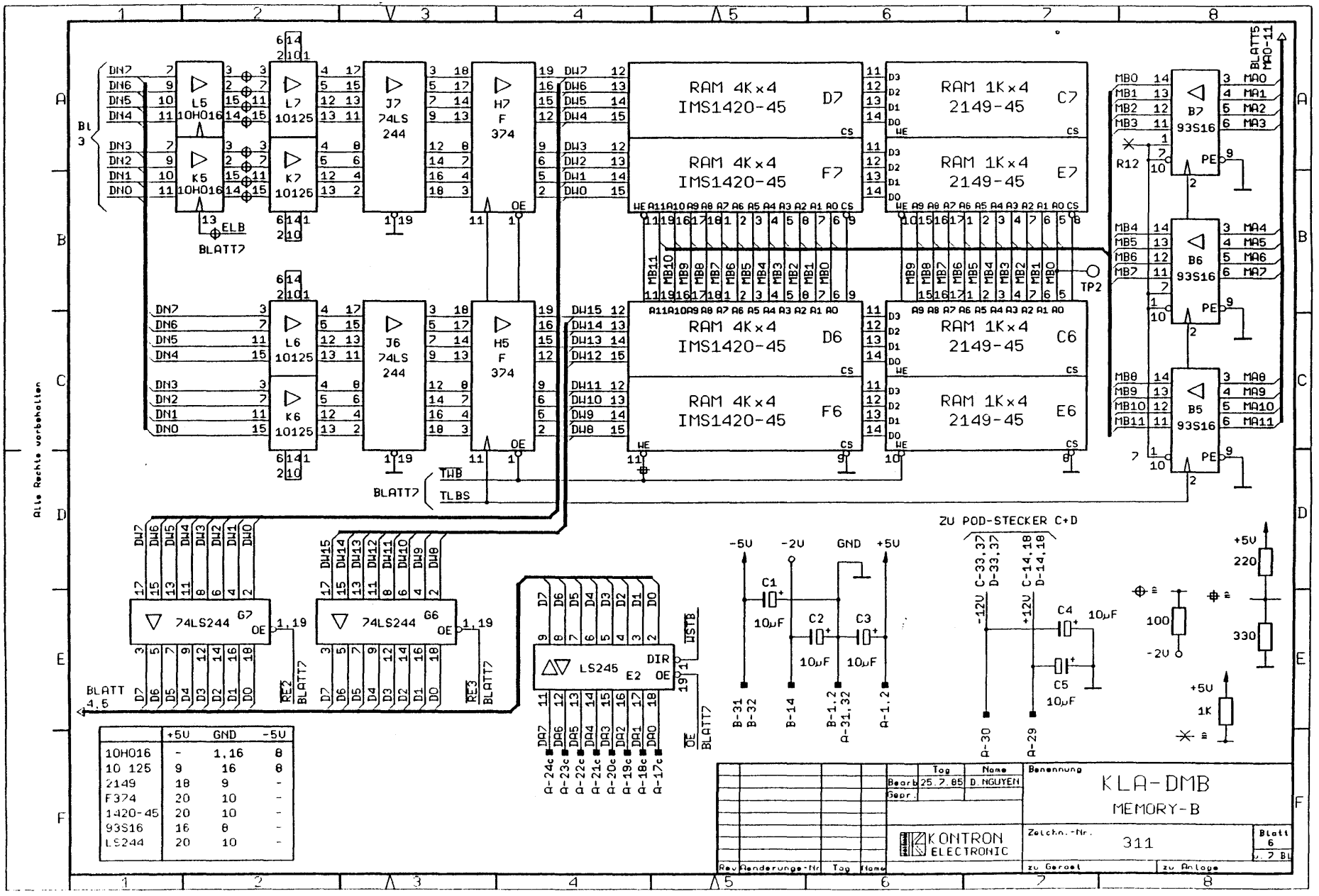

	+5V	GND	-5V
10H016	-	1,16	8
10 125	9	16	8
2149	18	9	-
F374	20	10	-
1420-45	20	10	-
93S16	16	8	-
LS244	20	10	-

Alle Rechte vorbehalten

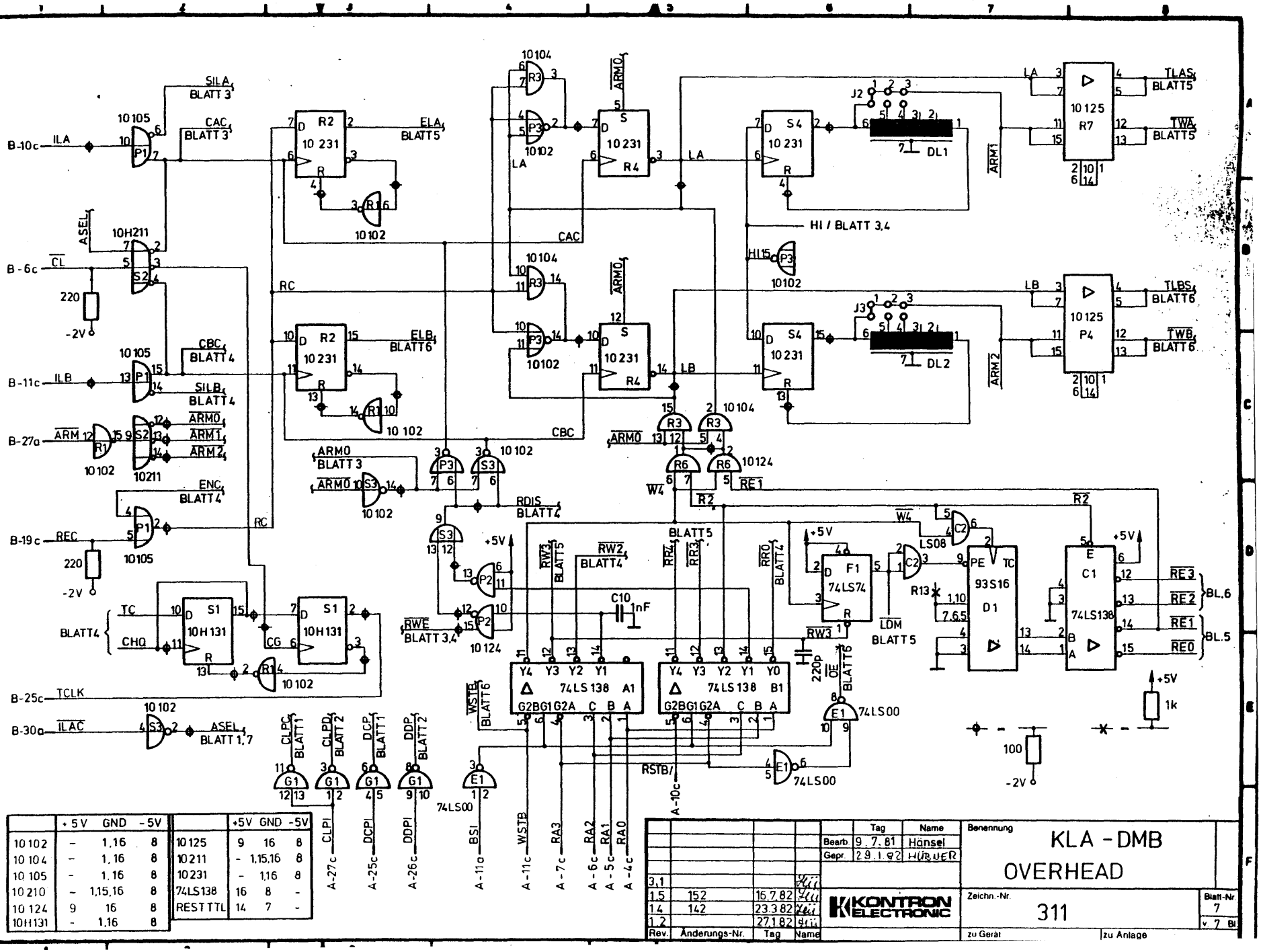

	+5V	GND	-5V
10102	-	1,16	8
10104	-	1,16	8
10105	-	1,16	8
10210	-	1,15,16	8
10124	9	16	8
10H131	-	1,16	8

	+5V	GND	-5V
10125	9	16	8
10211	-	1,15,16	8
10231	-	1,16	8
74LS138	16	8	-
REST TTL	14	7	-

Rev.	Änderungs-Nr.	Tag	Name
3.1			
1.5	152	16.7.82	
1.4	142	23.3.82	
1.2		27.1.82	

	Tag	Name
Bearb	9.7.81	Hänsel
Gepr	29.1.82	HÜBNER

Benennung: KLA - DMB OVERHEAD

KONTRON ELECTRONIC

Zeichn.-Nr.: 311

Blatt-Nr.: 7 v. 7 Bl

zu Gerät | zu Anlage

FE-07.80

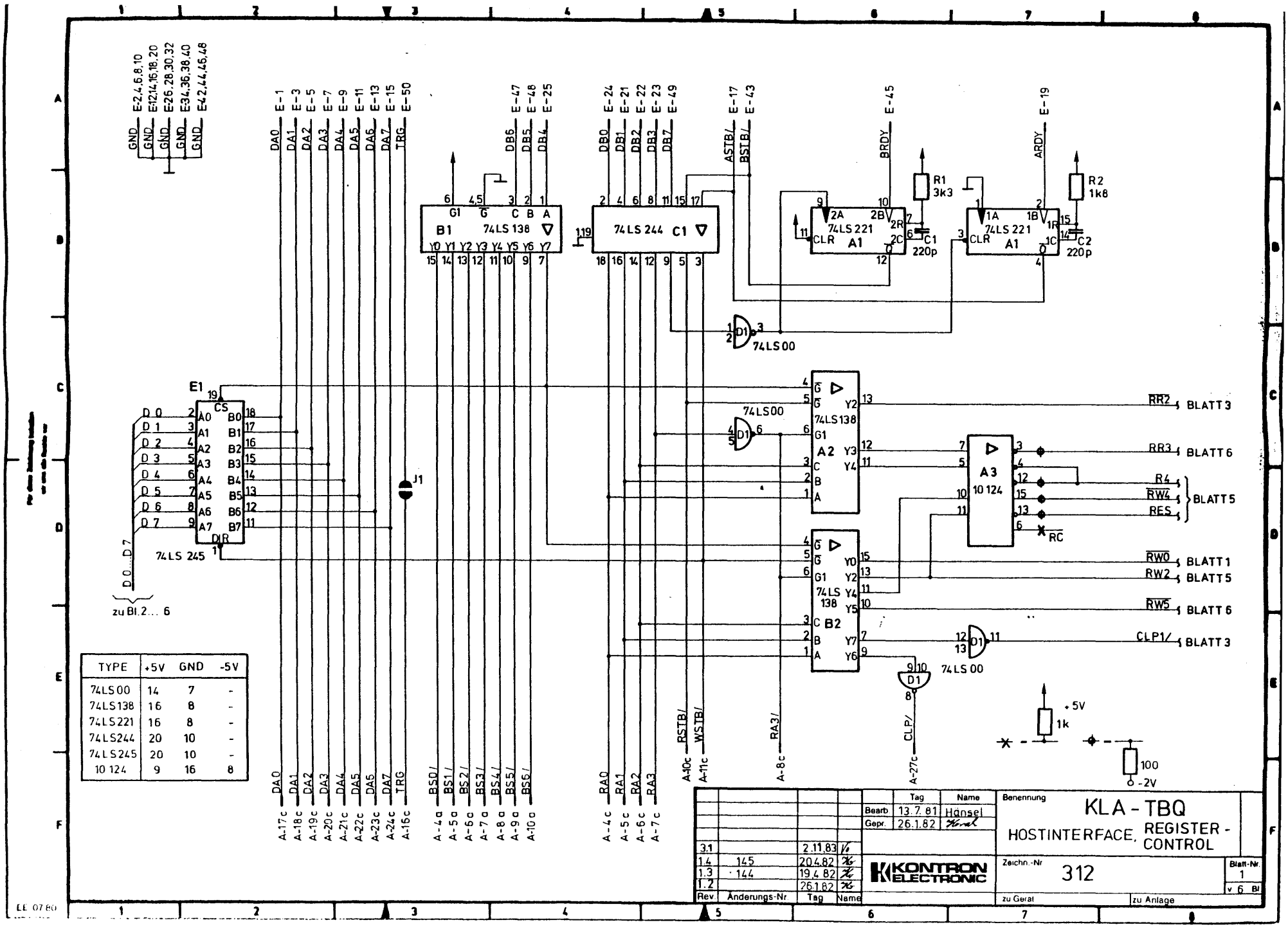

TYPE	+5V	GND	-5V
74LS00	14	7	-
74LS138	16	8	-
74LS221	16	8	-
74LS244	20	10	-
74LS245	20	10	-
10 124	9	16	8

Rev.	Änderungs-Nr.	Tag	Name
3.1		2.11.83	
1.4	145	20.4.82	
1.3	144	19.4.82	
1.2		26.1.82	

	Tag	Name
Bearb	13.7.81	Hansel
Gepr.	26.1.82	

KONTRON ELECTRONIC

Benennung: KLA - TBQ
HOSTINTERFACE, REGISTER - CONTROL

Zeichn.-Nr: 312

Blatt-Nr. 1 v 6 Bl

zu Gerat | zu Anlage

EE 07 80

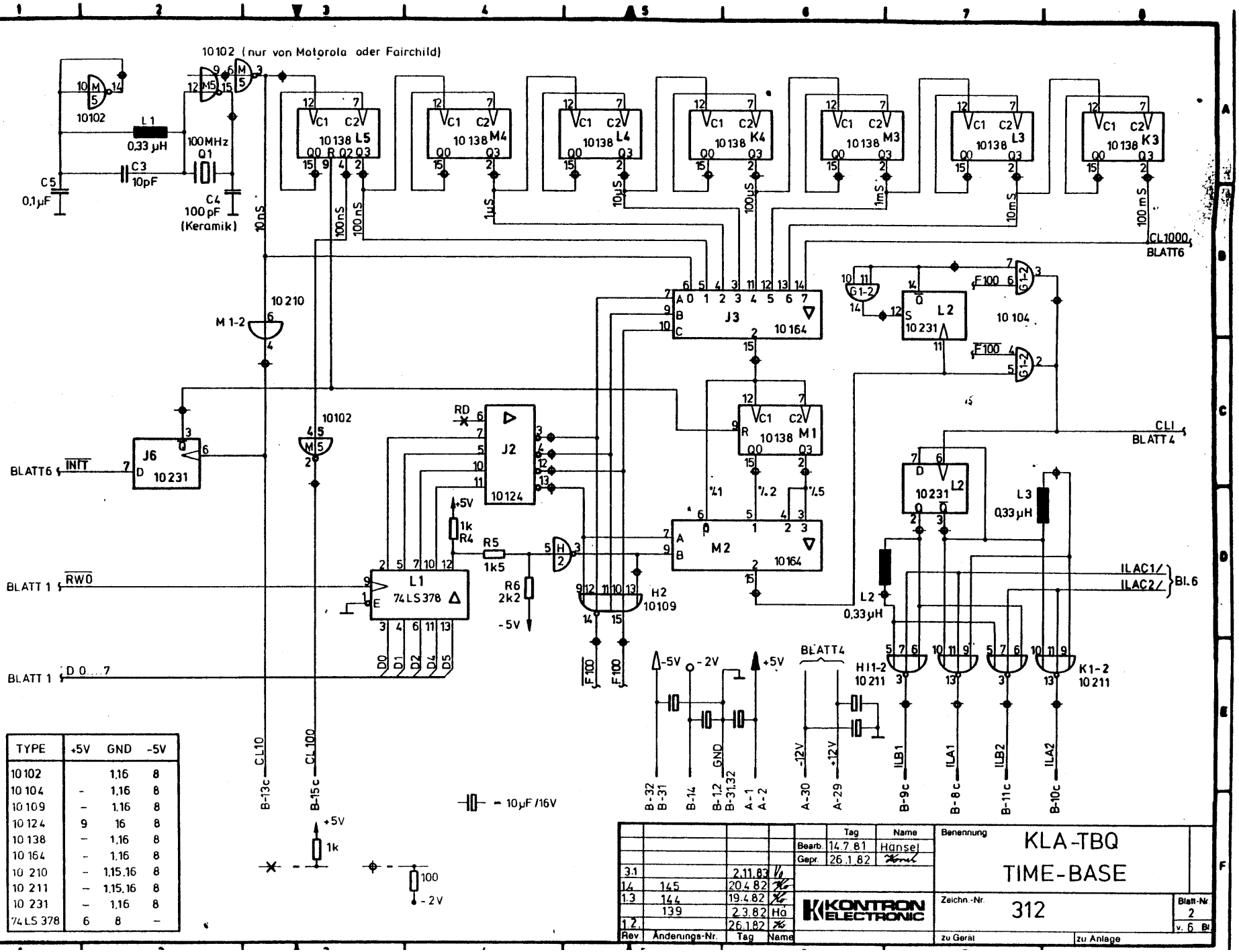

TYPE	+5V	GND	-5V
10102		1,16	8
10104	-	1,16	8
10109	-	1,16	8
10124	9	16	8
10138	-	1,16	8
10164	-	1,16	8
10 210	-	1,15,16	8
10 211	-	1,15,16	8
10 231	-	1,16	8
74LS 378	6	8	-

Rev.	Änderungs-Nr.	Tag	Name
3.1		2.11.83	lk
1.4	145	20.4.82	Ho
1.3	144	19.4.82	Ho
	139	2.3.82	Ho
1.2		26.1.82	Ho

	Tag	Name
Bearb.	14.7.81	Hansel
Gepr.	26.1.82	

KONTRON ELECTRONIC

Benennung: KLA-TBQ TIME-BASE

Zeichn.-Nr.: 312

Blatt-Nr.: 2 v. 6 Bl.

zu Gerät | zu Anlage

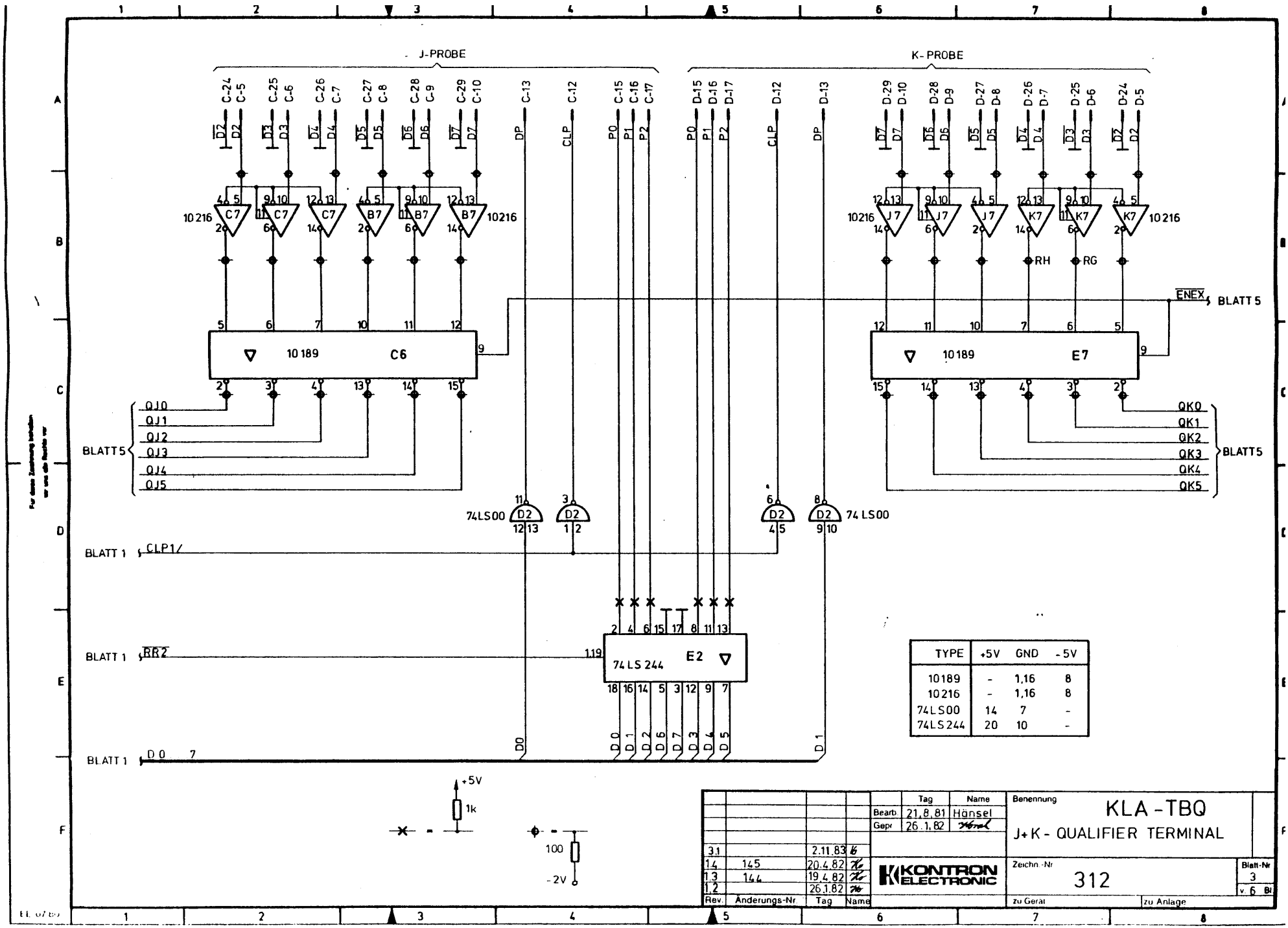

TYPE	+5V	GND	-5V
10189	-	1,16	8
10216	-	1,16	8
74LS00	14	7	-
74LS244	20	10	-

Rev.	Änderungs-Nr.	Tag	Name
3.1		2.11.83	
1.4	145	20.4.82	
1.3	144	19.4.82	
1.2		26.1.82	

	Tag	Name
Bearb.	21.8.81	Hänsel
Gepr.	26.1.82	

KONTRON ELECTRONIC

Benennung: KLA-TBQ
J+K- QUALIFIER TERMINAL

Zeichn.-Nr: 312

Blatt-Nr: 3 v. 6 Bl.

zu Gerät | zu Anlage

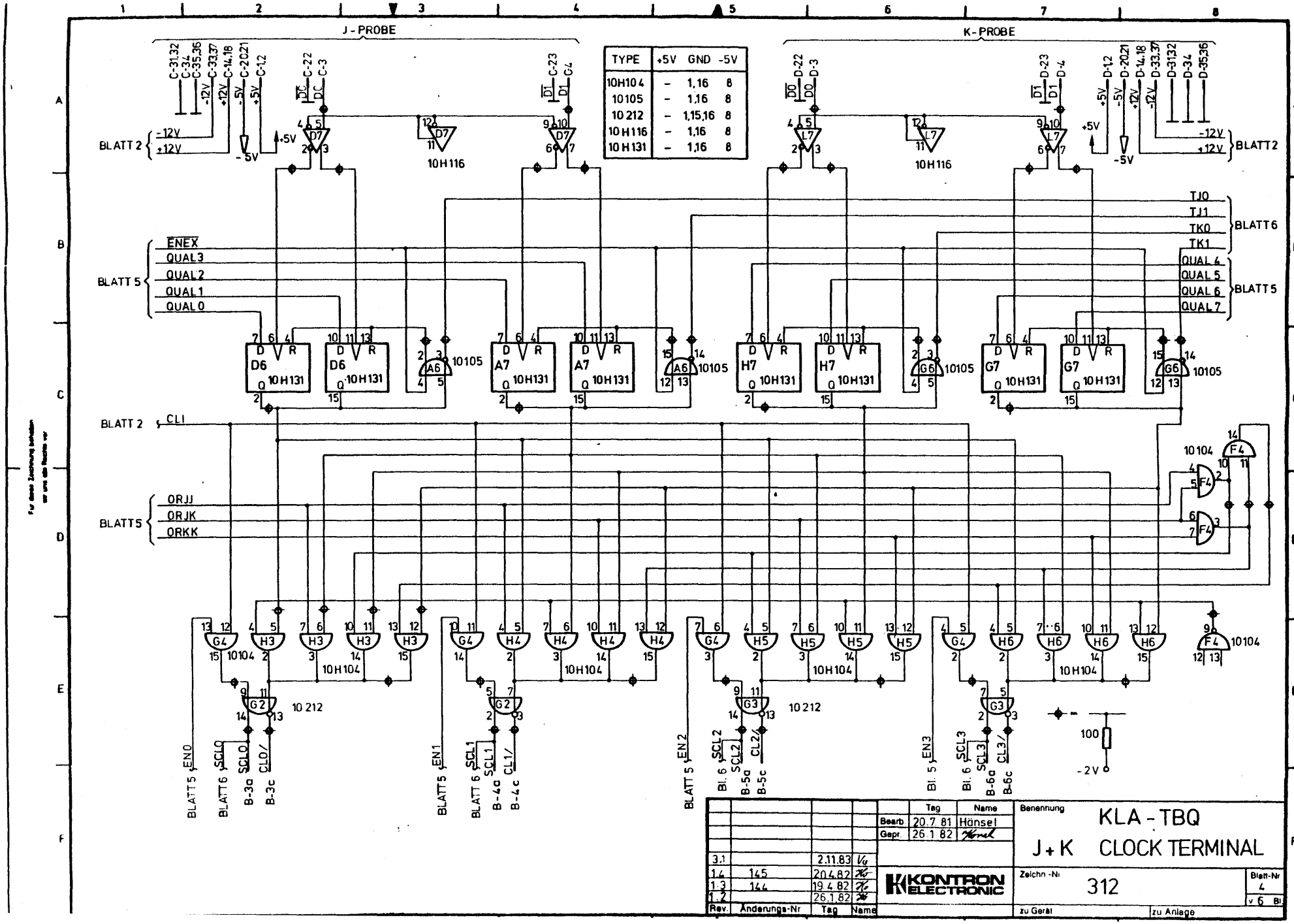

TYPE	+5V	GND	-5V
10H104	–	1,16	8
10105	–	1,16	8
10 212	–	1,15,16	8
10 H116	–	1,16	8
10 H131	–	1,16	8

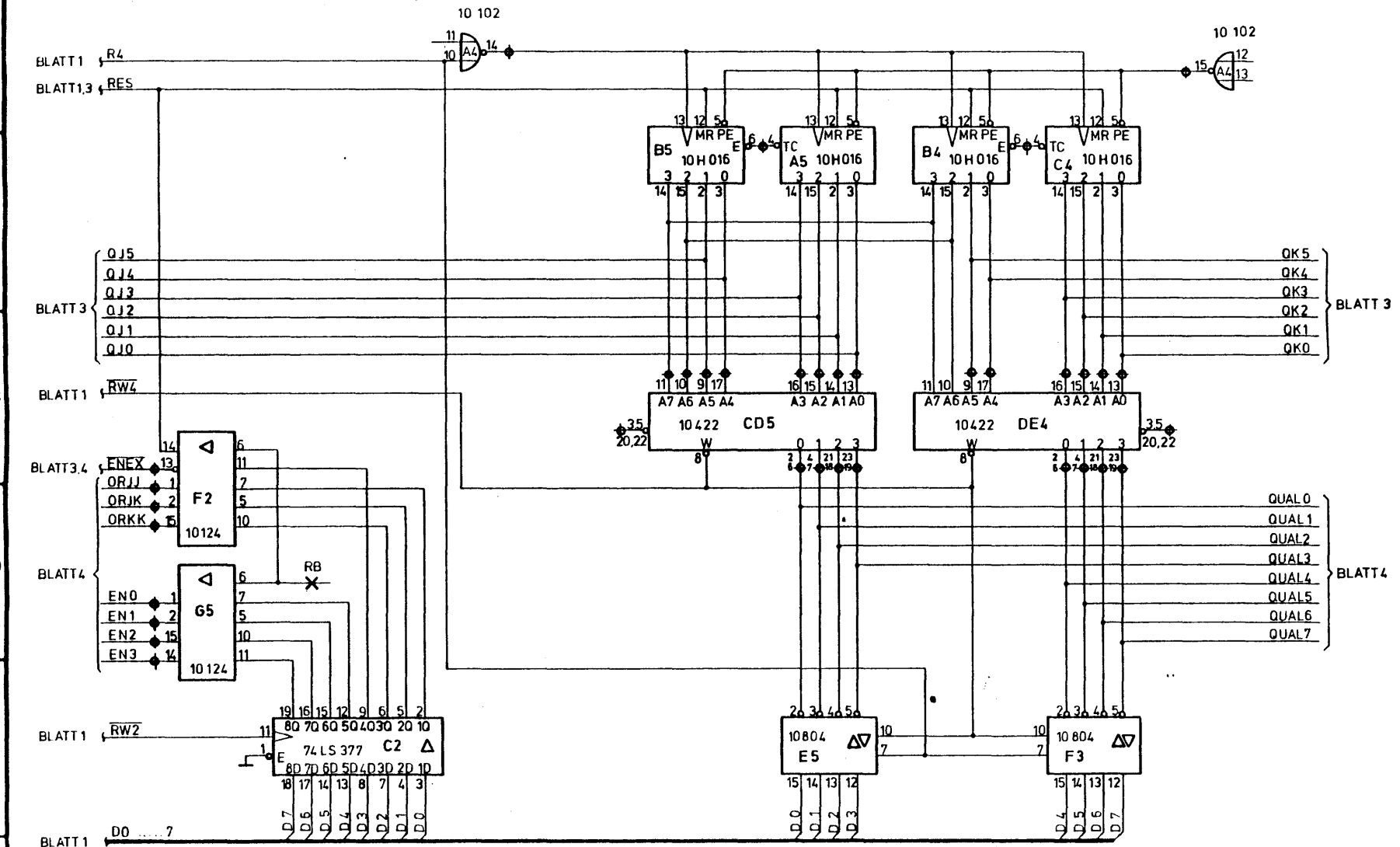

TYPE	+5V	GND	-5V
10016	-	1,16	8
10102	-	1,16	8
10124	9	16	8
10422	-	1,24	12
10804	9	1,16	8
74LS377	20	10	-

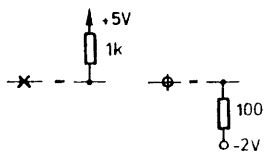

Rev	Änderungs-Nr.	Tag	Name
3.1		2.11.83	Vo
1.4	145	20.4.82	Hz
1.3	144	19.4.82	Hz
1.2		26.1.82	Hz

	Tag	Name
Bearb.	16.7.81	Hänsel
Gepr.	26.1.82	Hänsel

KONTRON ELECTRONIC

Benennung: KLA - TBQ QUALIFIER

Zeichn.-Nr: 312

Blatt-Nr: 5 v 6 Bl

zu Gerät | zu Anlage

EL-07 80

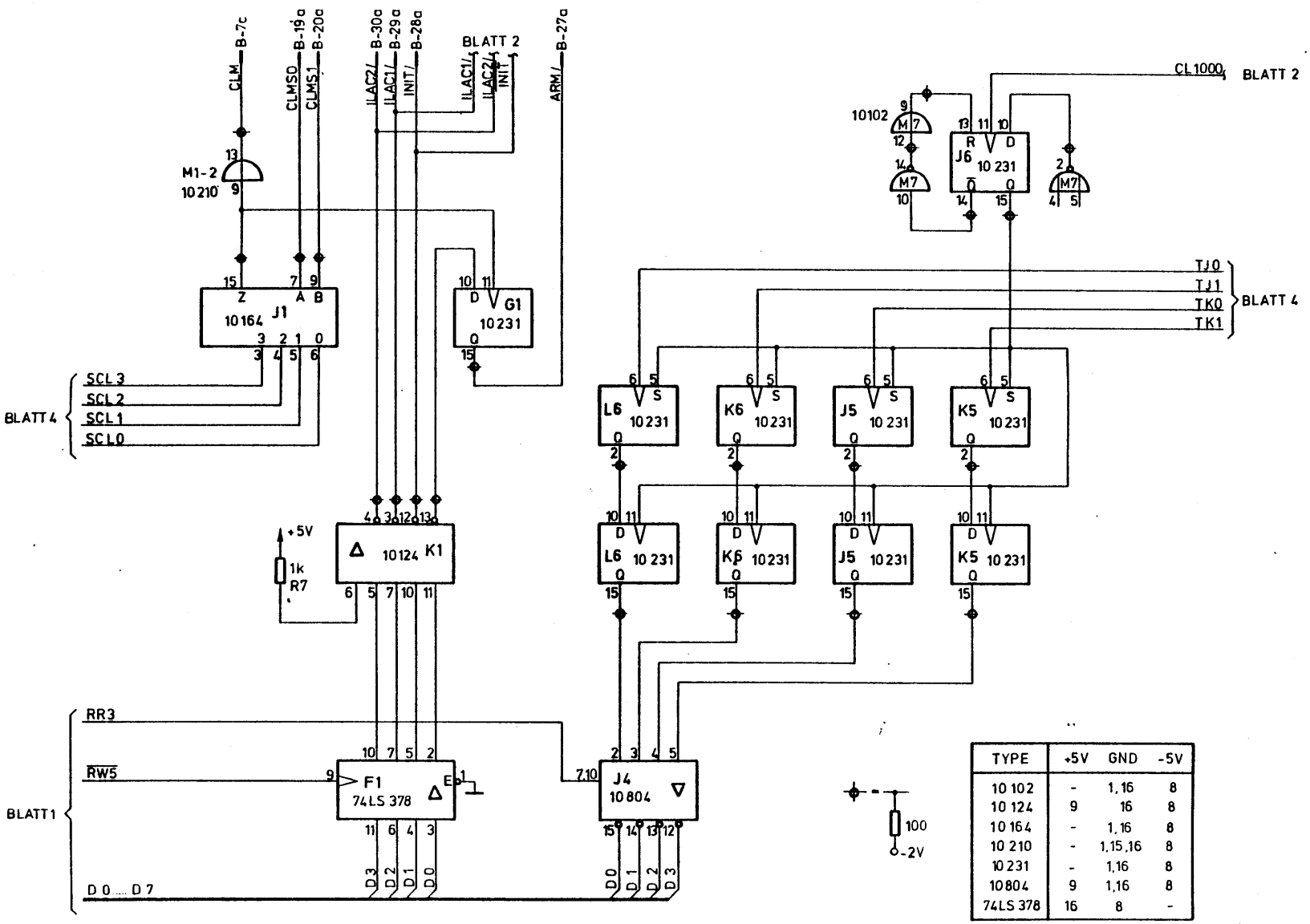

TYPE	+5V	GND	-5V
10 102	-	1, 16	8
10 124	9	16	8
10 164	-	1, 16	8
10 210	-	1, 15, 16	8
10 231	-	1, 16	8
10 804	9	1, 16	8
74LS 378	16	8	-

Rev.	Änderungs-Nr.	Tag	Name
3.1		2.11.83	
1.4	145	20.4.82	
1.3	144	19.4.82	
1.2		26.1.82	

	Tag	Name
Bearb	16.7.81	Hänsel
Gepr	26.1.82	

KONTRON ELECTRONIC

Benennung

KLA - TBQ
MASTER-CLOCK-SELECT
SLOW - CLOCK-DETECT

Zeichn.-Nr. 312

Blatt-Nr 6 v 6 Bl

zu Gerät | zu Anlage

Für diese Zeichnung behalten
wir uns alle Rechte vor

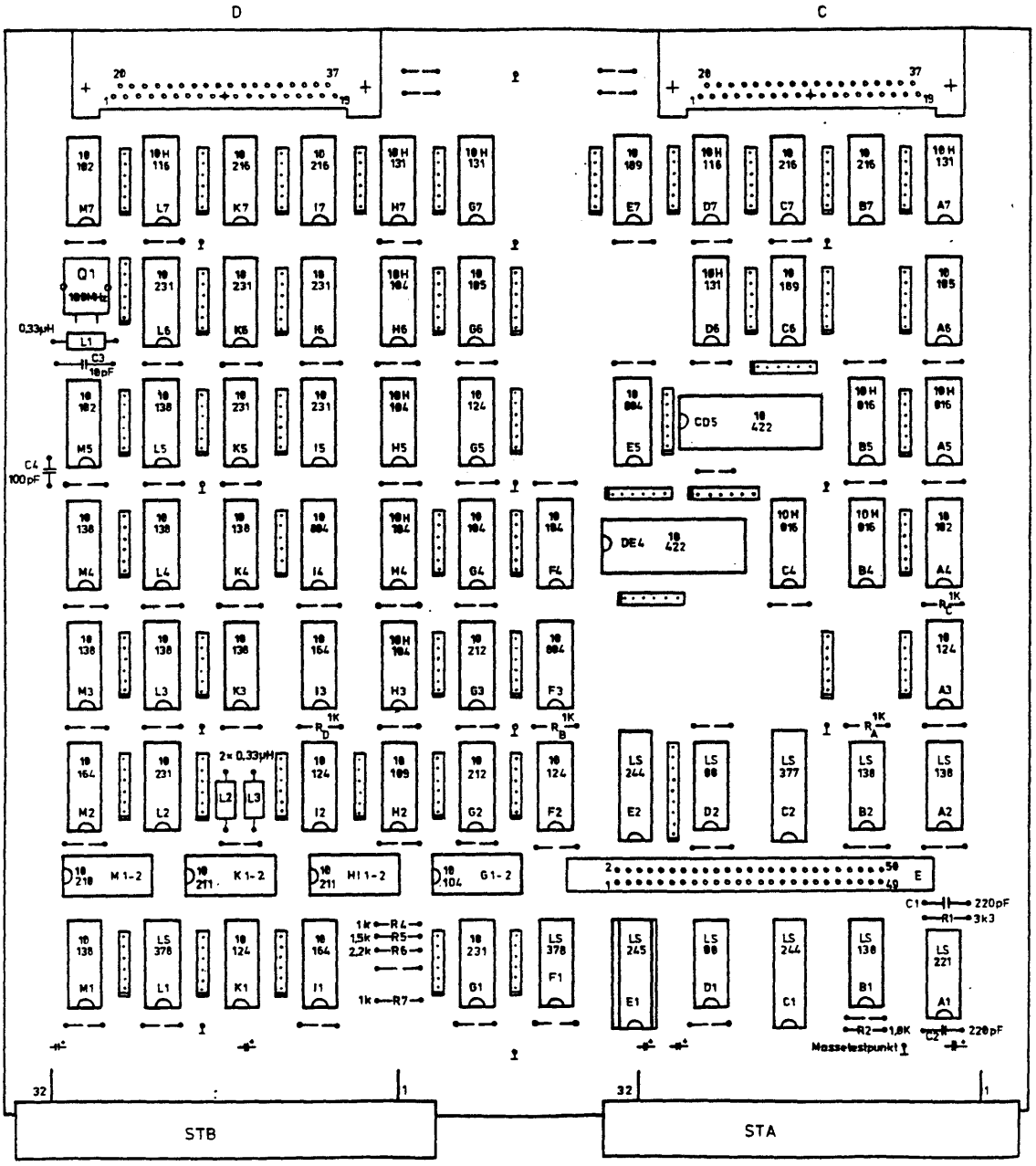

Rev	Änderungs-Nr	Tag	Name
1.2			
3.1			
1.4	145	211.83	
1.3	144	20.4.82	
1.2	139	19.4.82	
		2.3.82	
		26.1.82	

	EE	Tag	Name
Bearb		09.81	HE
Gepr		26.1.82	

KONTRON ELECTRONIC

Benennung: KLA - SP-TBQ

Zeichn.-Nr: 312

zu Gerät

zu Anlage

Blatt-Nr

v

Bl

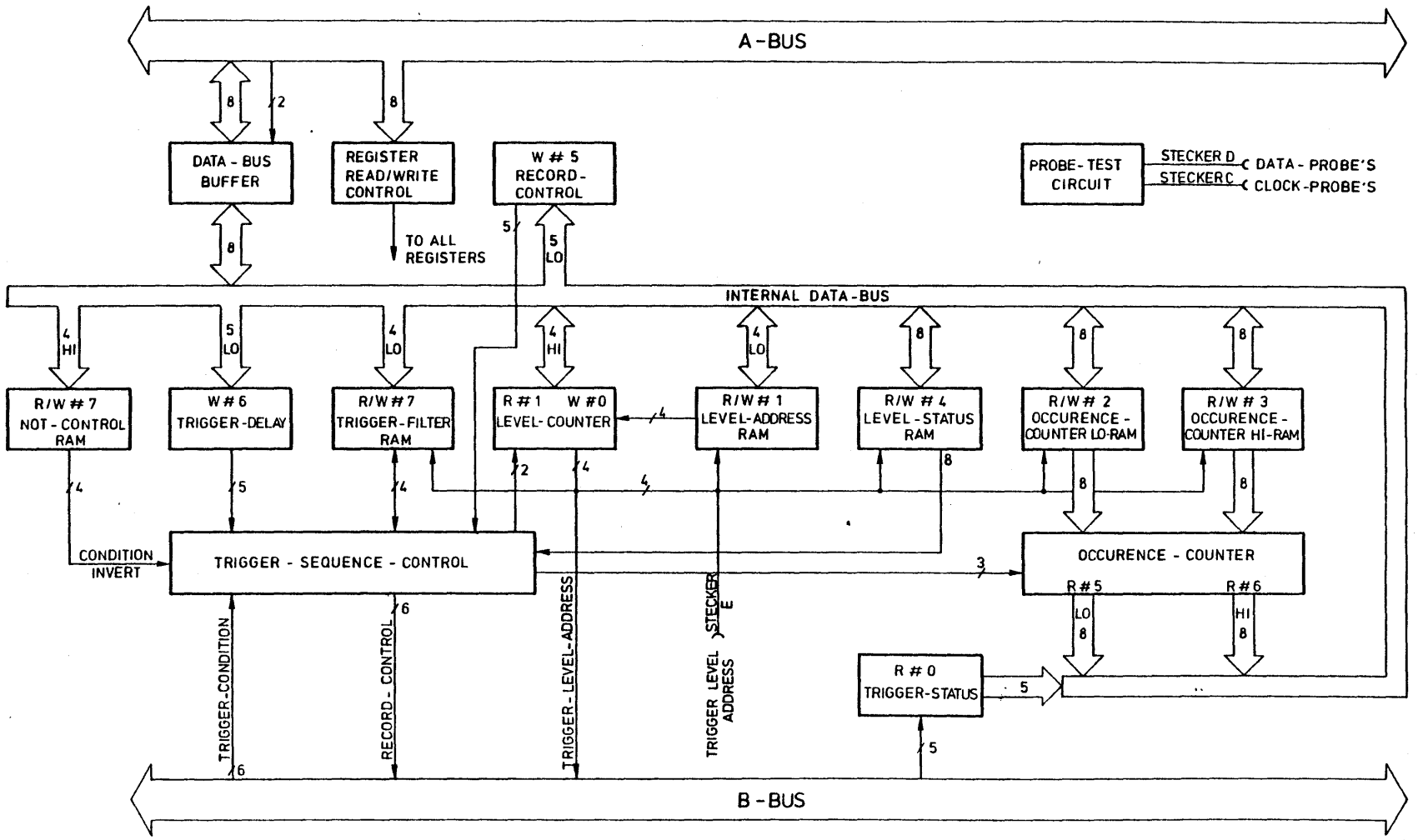

Rev.	Änderungs-Nr.	Tag	Name
3.1		2.11.83	
1.4	153	15.7.82	
1.3	146	20.4.82	
1.2	143	19.4.82	
1.1		27.1.82	

	Tag	Name
Bearb.	20.7.81	Hänsel
Gepr.	29.1.82	

KONTRON ELECTRONIC

Benennung: KLA - SEQ
SEQUENCE - CONTROL

Zeichn.-Nr: 313

Blatt-Nr:

zu Gerät

zu Anlage

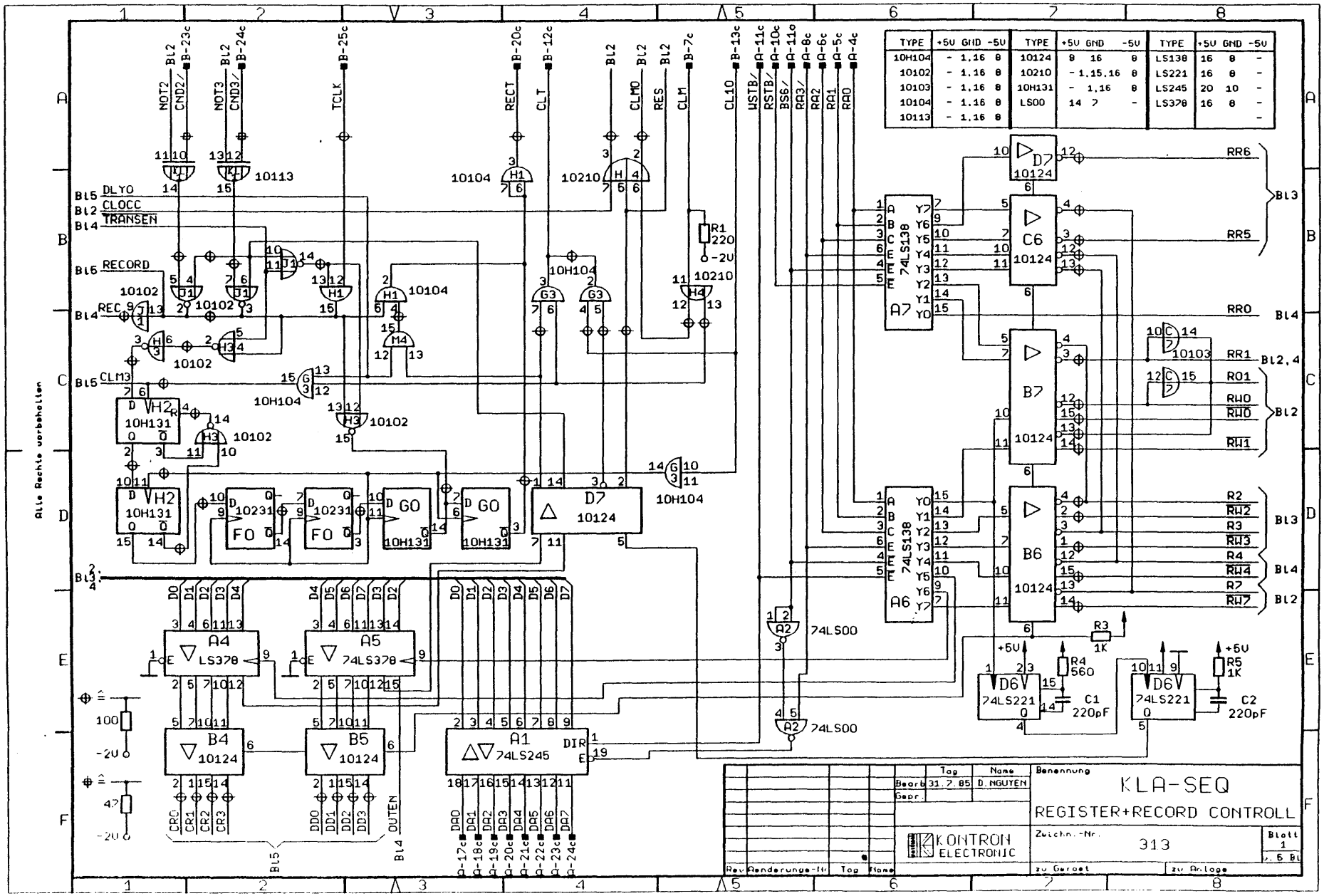

TYPE	+5V	GND	-5V
10H104	-	1,16	8
10102	-	1,16	8
10103	-	1,16	8
10104	-	1,16	8
10113	-	1,16	8

TYPE	+5V	GND	-5V
10124	8	16	8
10210	-	1,15,16	8
10H131	-	1,16	8
LS00	14	7	-

TYPE	+5V	GND	-5V
LS138	16	8	-
LS221	16	8	-
LS245	20	10	-
LS378	16	8	-
			-

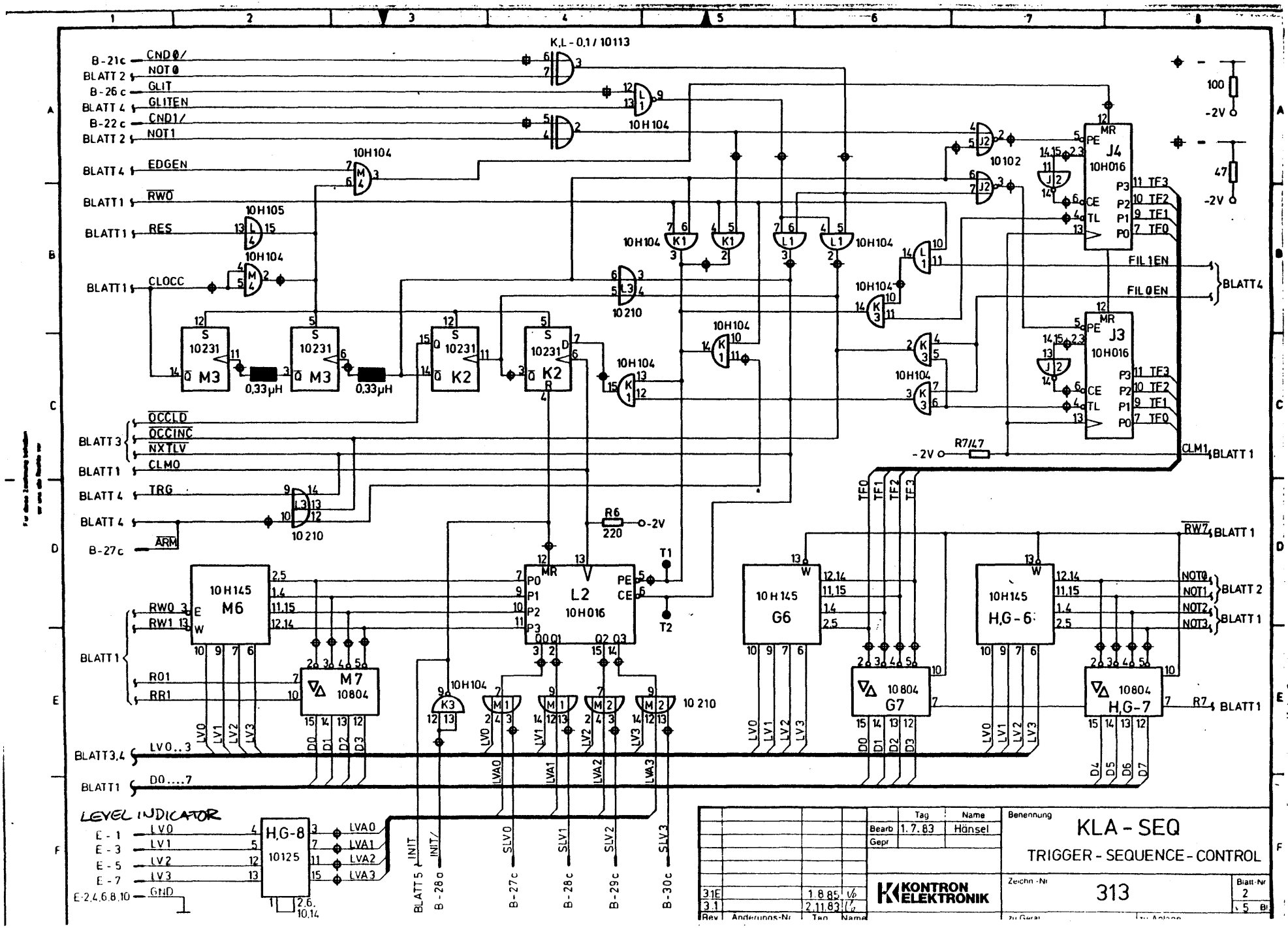

B-21c CND0/
BLATT 2 NOT0
B-26c GLIT
BLATT 4 GLITEN
B-22c CND1/
BLATT 2 NOT1
BLATT 4 EDGEN
BLATT 1 RW0
BLATT 1 RES
BLATT 1 CLOCC
BLATT 3 OCCLD
OCCINC
NXTLV
BLATT 1 CLM0
BLATT 4 TRG
BLATT 4
B-27c ARM
BLATT 1 RW0
RW1
R01
RR1
BLATT 3,4 LV0..3
BLATT 1 D0....7
LEVEL INDICATOR
E-1 LV0
E-3 LV1
E-5 LV2
E-7 LV3
E-2,4,6,8,10 GND
K,L-0,1/10113
10H104
10H105
10231
M3
K2
0,33µH
10210
10102
J4
10H016
J3
10H016
FIL1EN
FIL0EN
BLATT 4
R7/47
-2V
CLM1 BLATT 1
R6
220
T1
T2
10H145
M6
L2
10H016
G6
H,G-6
M7
10804
G7
H,G-7
RW7 BLATT 1
NOT0
NOT1
NOT2
NOT3
BLATT 2
BLATT 1
R7 BLATT 1
H,G-8
10125
LVA0
LVA1
LVA2
LVA3
INIT
INIT/
SLV0
SLV1
SLV2
SLV3
BLATT 5
B-28a
B-27c
B-28c
B-29c
B-30c
100
47
-2V
Tag
Name
Bearb 1.7.83 Hänsel
Gepr
Benennung
KLA - SEQ
TRIGGER - SEQUENCE - CONTROL
KONTRON ELEKTRONIK
Zeichn.-Nr 313
Blatt-Nr 2
3.1E 1.8.85
3.1 2.11.83
Rev Änderungs-Nr Tag Name

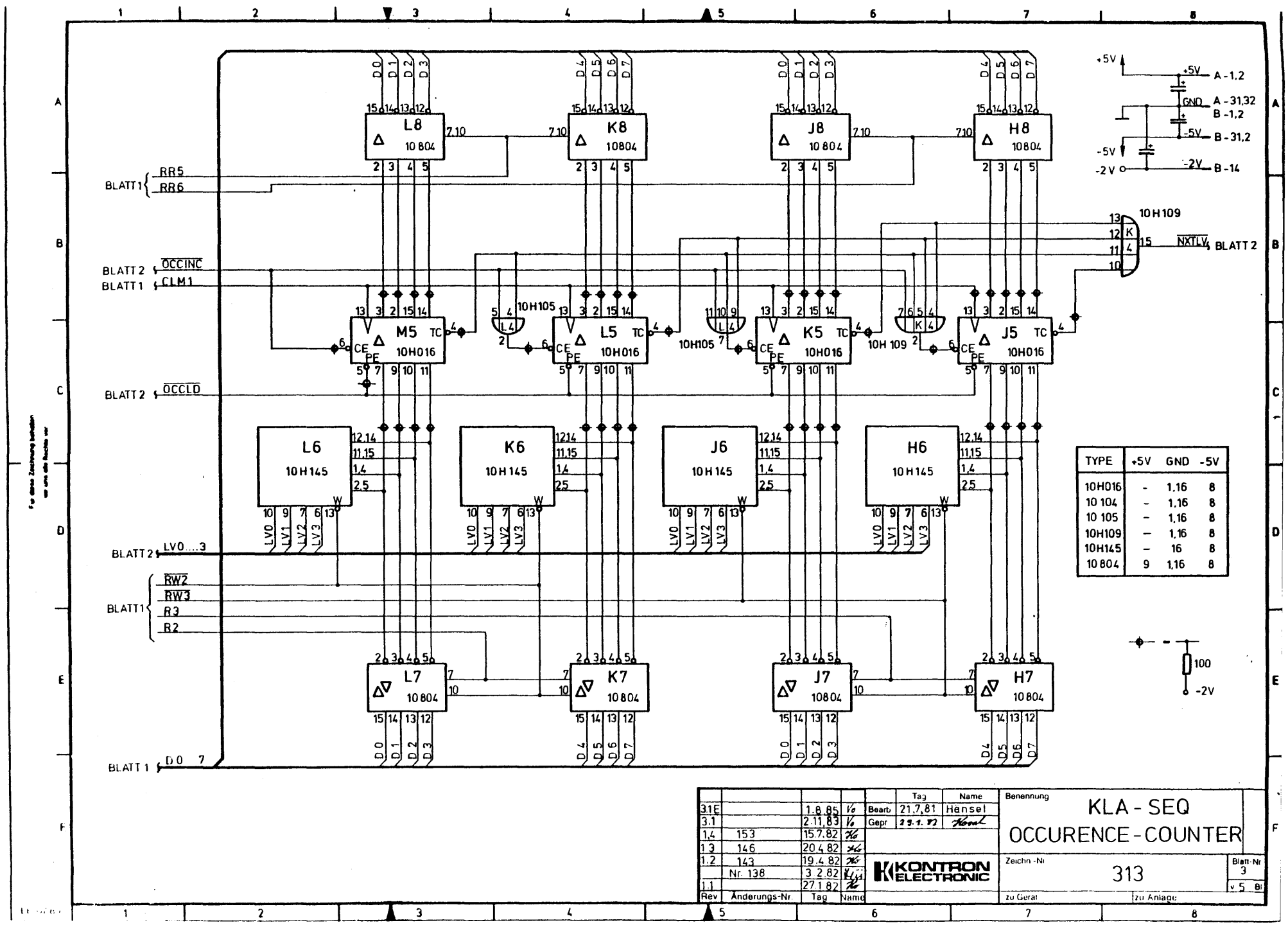

TYPE	+5V	GND	-5V
10H016	-	1,16	8
10 104	-	1,16	8
10 105	-	1,16	8
10H109	-	1,16	8
10H145	-	16	8
10 804	9	1,16	8

Rev	Änderungs-Nr.	Tag	Name
3.1E		1.8.85	Vo
3.1		2.11.83	Vo
1.4	153	15.7.82	Vo
1.3	146	20.4.82	Vo
1.2	143	19.4.82	Vo
	Nr. 138	3.2.82	Vo
1.1		27.1.82	Vo

	Tag	Name
Bearb	21.7.81	Hensel
Gepr	23.7.81	Hensel

KONTRON ELECTRONIC

Benennung: KLA - SEQ
OCCURENCE - COUNTER

Zeichn.-Nr: 313

Blatt-Nr: 3 v 5 Bl

zu Gerat | zu Anlage

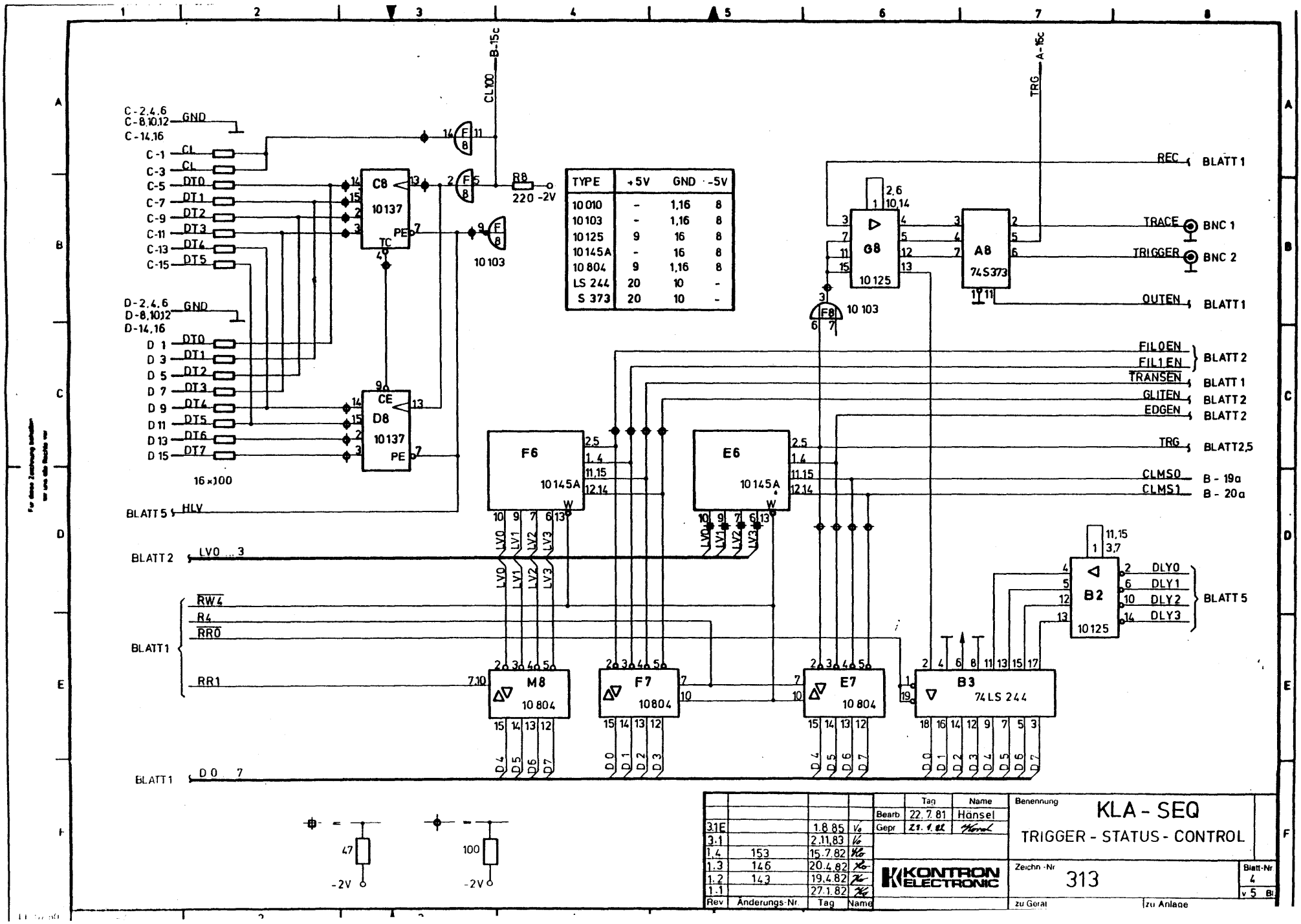

Rev	Änderungs-Nr.	Tag	Name
3.1E		1.8.85	Vo
3.1		2.11.83	Hi
1.4	153	15.7.82	Ho
1.3	146	20.4.82	Ko
1.2	143	19.4.82	Ho
1.1		27.1.82	Ho

	Tag	Name
Bearb	22.7.81	Hänsel
Gepr	23.7.81	Hänsel

KONTRON ELECTRONIC

Benennung

KLA - SEQ

TRIGGER - STATUS - CONTROL

Zeichn.-Nr 313

Blatt-Nr 4 v 5 Bl

zu Gerät

zu Anlage

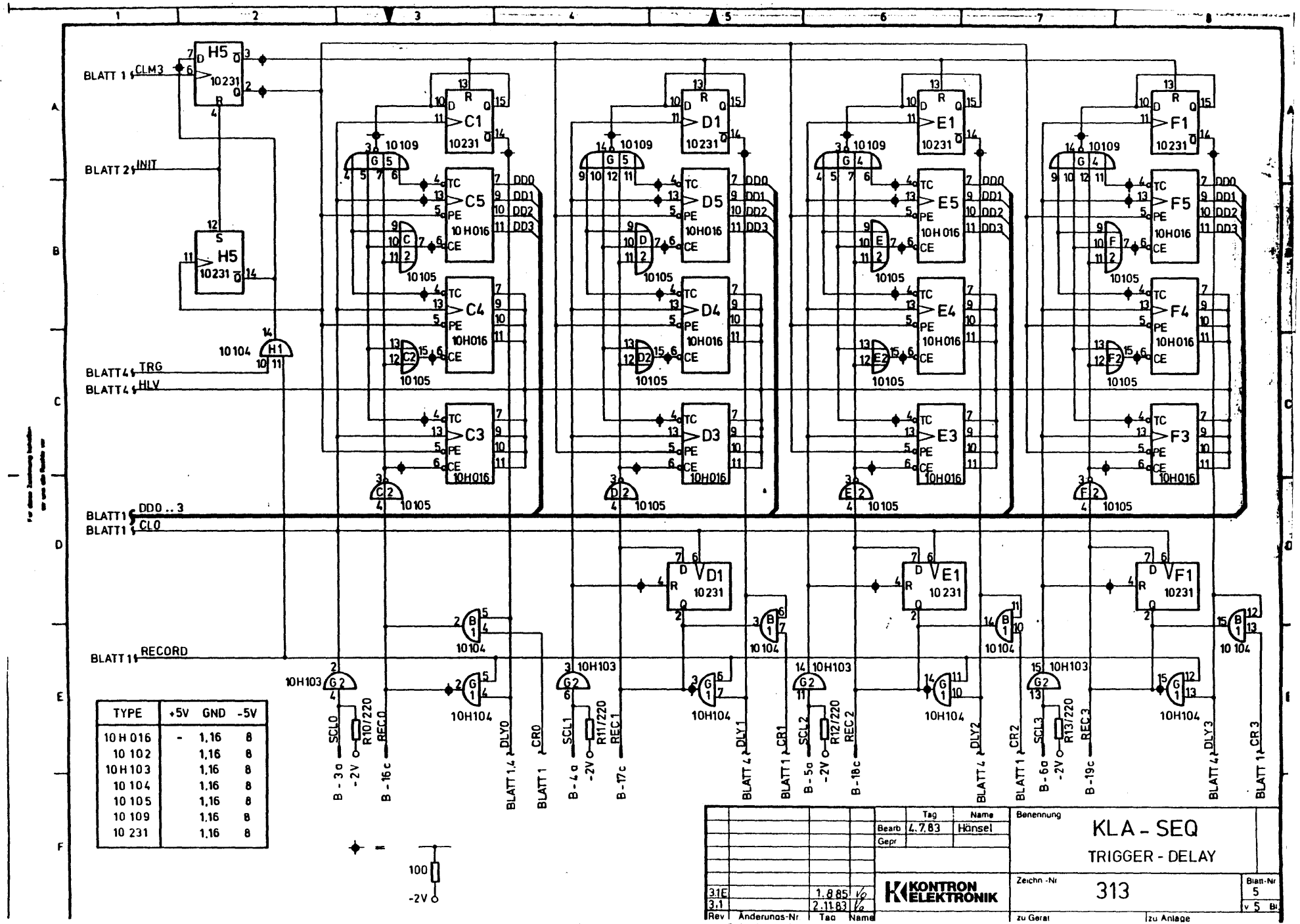

TYPE	+5V	GND	-5V
10 H 016	-	1,16	8
10 102		1,16	8
10 H 103		1,16	8
10 104		1,16	8
10 105		1,16	8
10 109		1,16	8
10 231		1,16	8

	Tag	Name
Bearb	4.7.83	Hänsel
Gepr		

Benennung: KLA - SEQ
TRIGGER - DELAY

KONTRON ELEKTRONIK

Zeichn.-Nr: 313

Blatt-Nr: 5 v 5 Bl.

Rev	Änderungs-Nr	Tag	Name
3.1E		1.8.85	Vo
3.1		2.11.83	Vo

zu Gerät | zu Anlage

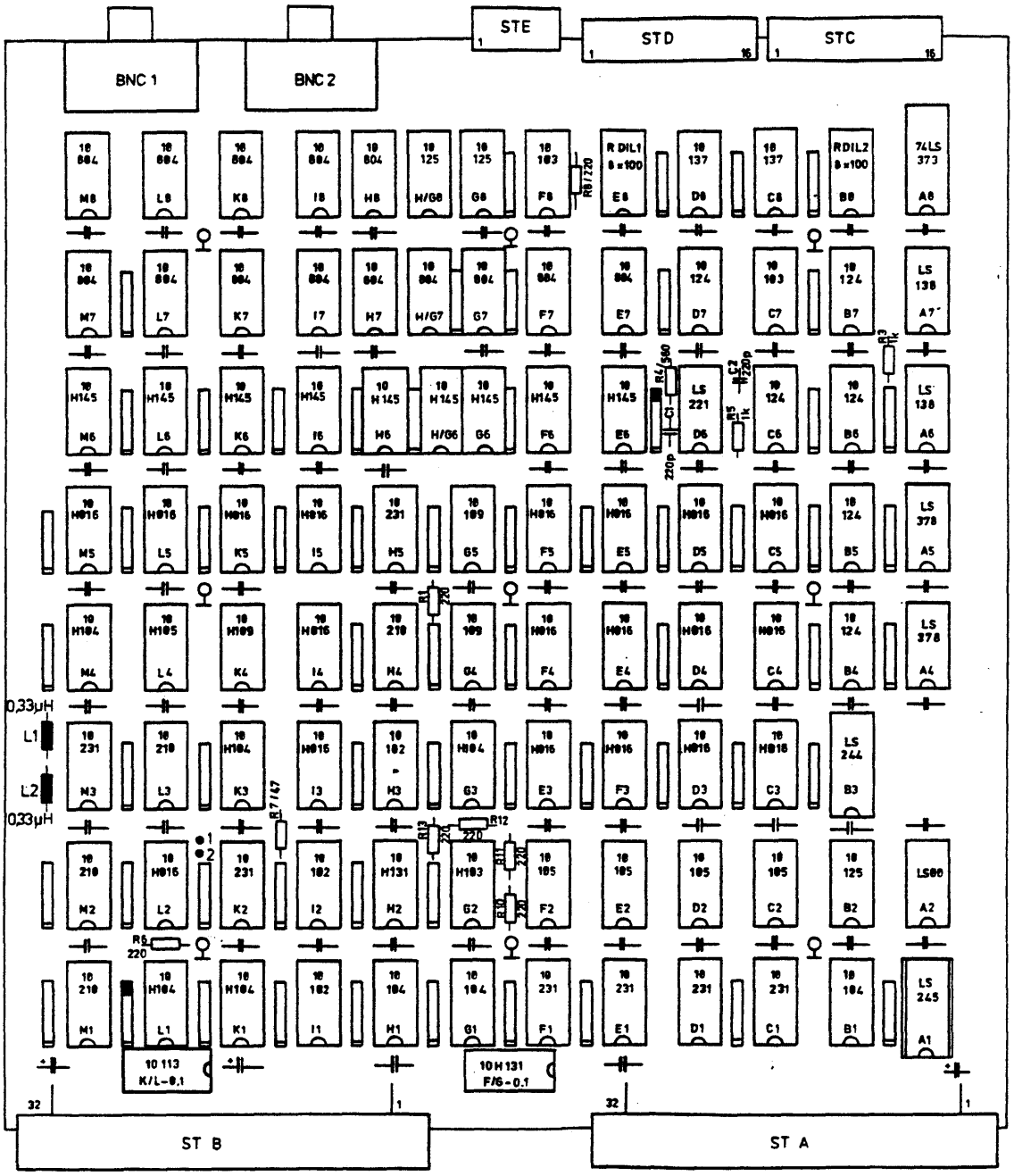

Rev	Änderungs-Nr	Tag	Name
3.1		2.11.83	HE
1.4	153	15.7.82	
1.3	146	20.4.82	
1.2	143	19.4.82	
1.1		27.1.82	

	EE	Tag	Name
Gepr.			
Bearb.		08.81	HE

KONTRON ELEKTRONIK

Benennung: KLA - SEQ

BESTÜCKUNGSSKIZZE

Zeichn.-Nr.

313

Blatt-Nr. v BI

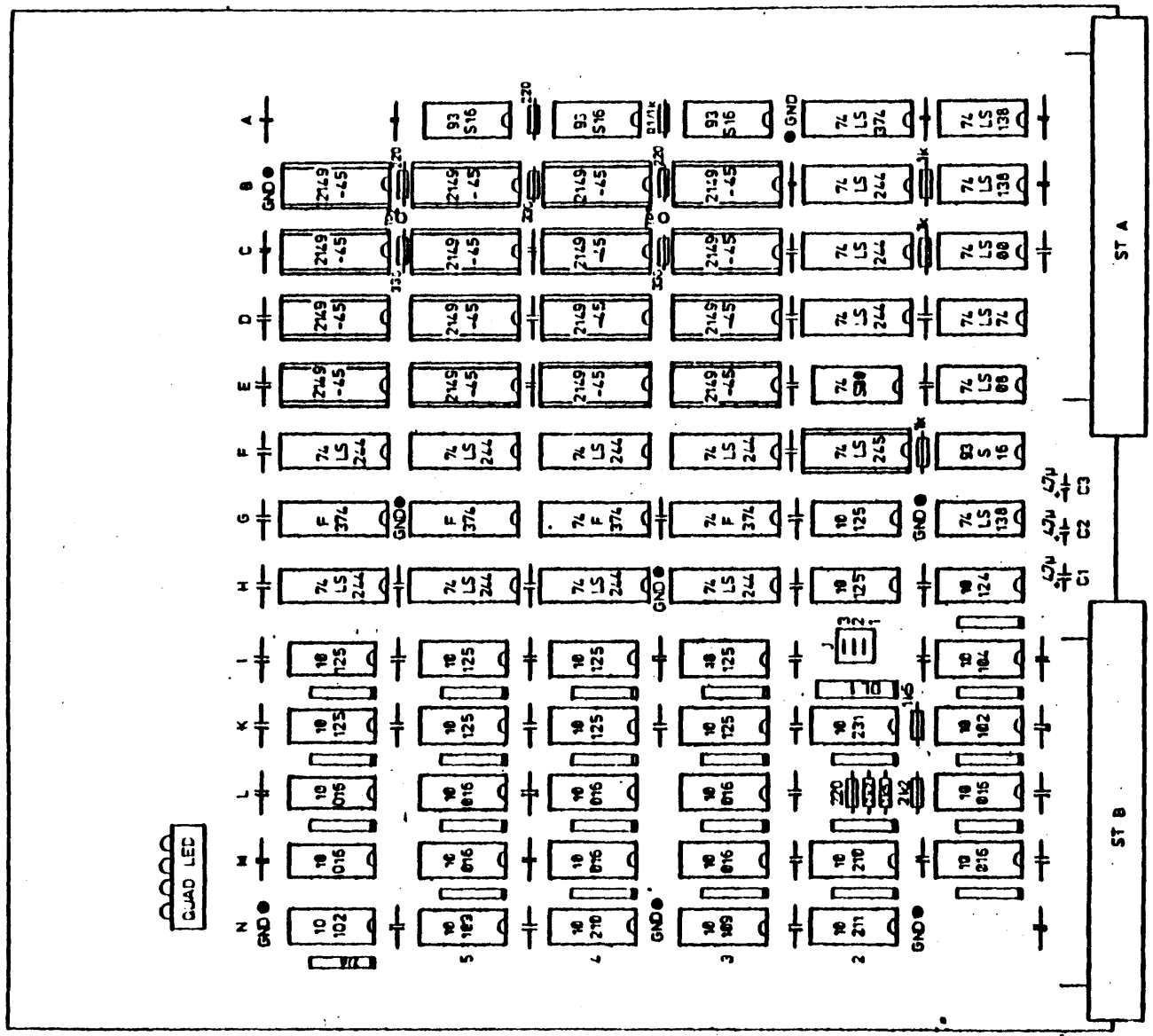

				EE	Tag	Name
				Bearb	08.81	HE
				Gepr.	1.2.82	[illegible]
1.2	147	20.6.82	[illegible]	KONTRON ELECTRONIC		
1.1		3.2.82	[illegible]			
Änd Zust	Änderungs Mitteilung	Tag	Name			

Benennung

KLA - TMB

BESTÜCKUNGSSKIZZE

Zeichn.-Nr. 314

Blatt-Nr.

zu Gerät

Ersatz für

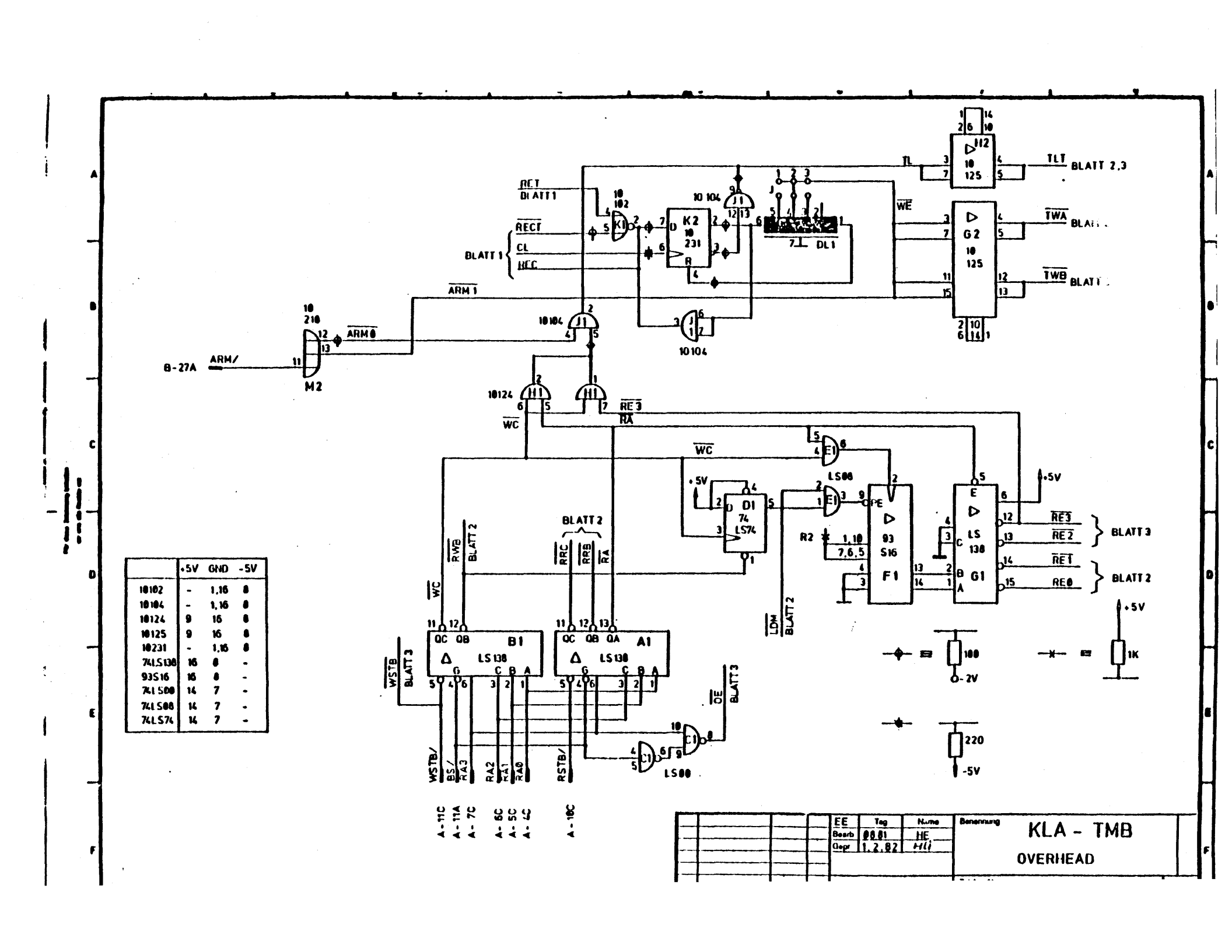

	+5V	GND	-5V
10102	-	1,16	8
10104	-	1,16	8
10124	9	16	8
10125	9	16	8
10231	-	1,16	8
74LS138	16	8	-
93S16	16	8	-
74LS00	14	7	-
74LS08	14	7	-
74LS74	14	7	-

	EE	Tag	Name
	Bearb	08.01	HE
	Gepr	1.2.82	Hli

Benennung

KLA - TMB

OVERHEAD

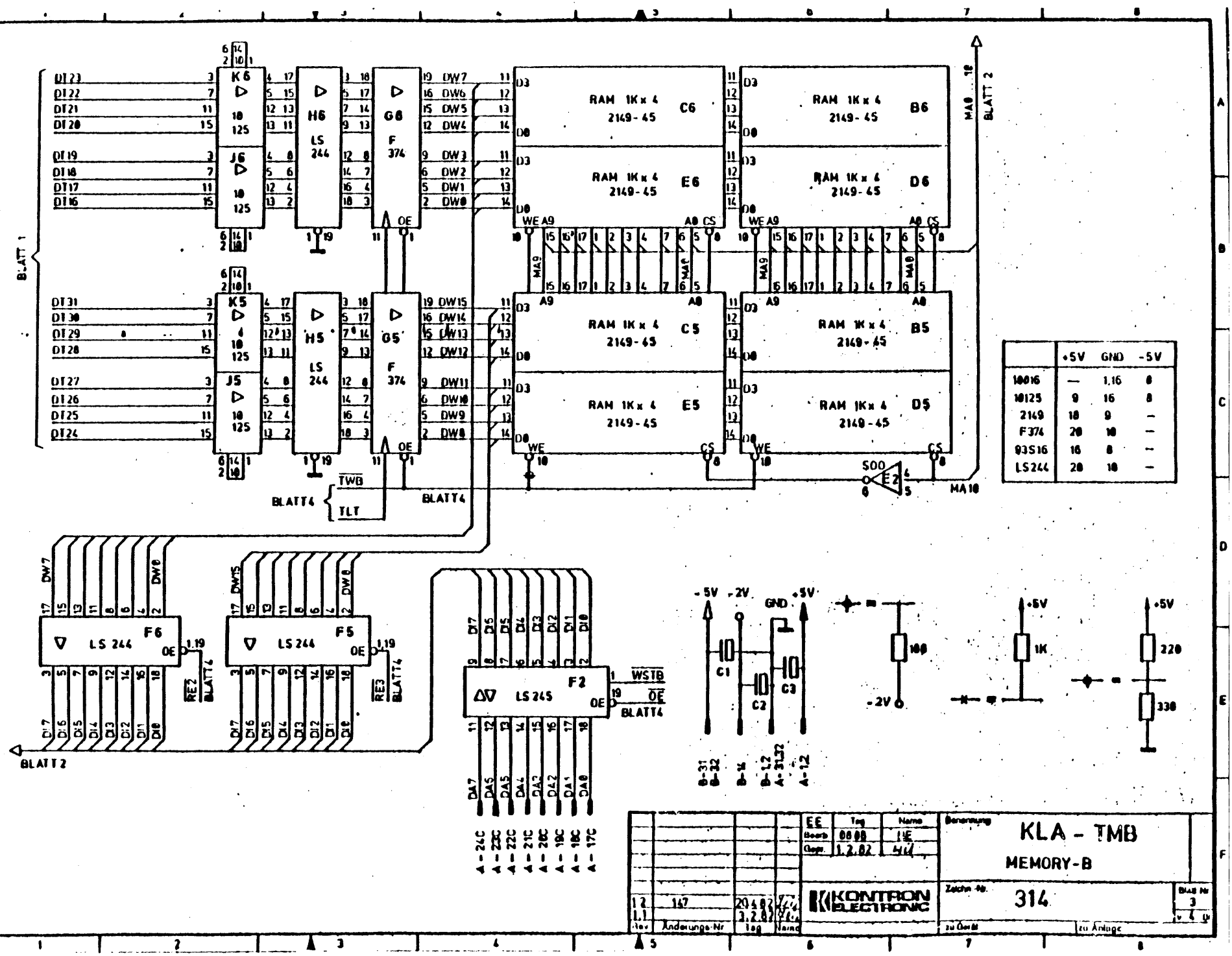

	+5V	GND	-5V
10016	—	1,16	8
10125	9	16	8
2149	18	9	—
F374	20	10	—
93S16	16	8	—
LS244	20	10	—

Rev	Änderungs-Nr	Tag	Name
1.2	147	20.4.82	
1.1		3.2.82	

EE	Tag	Name
Bearb	08.08	HE
Gepr.	1.2.82	

KONTRON ELECTRONIC

Benennung: KLA - TMB

MEMORY-B

Zeichn.-Nr. 314

Blatt Nr 3

zu Gerät

zu Anlage

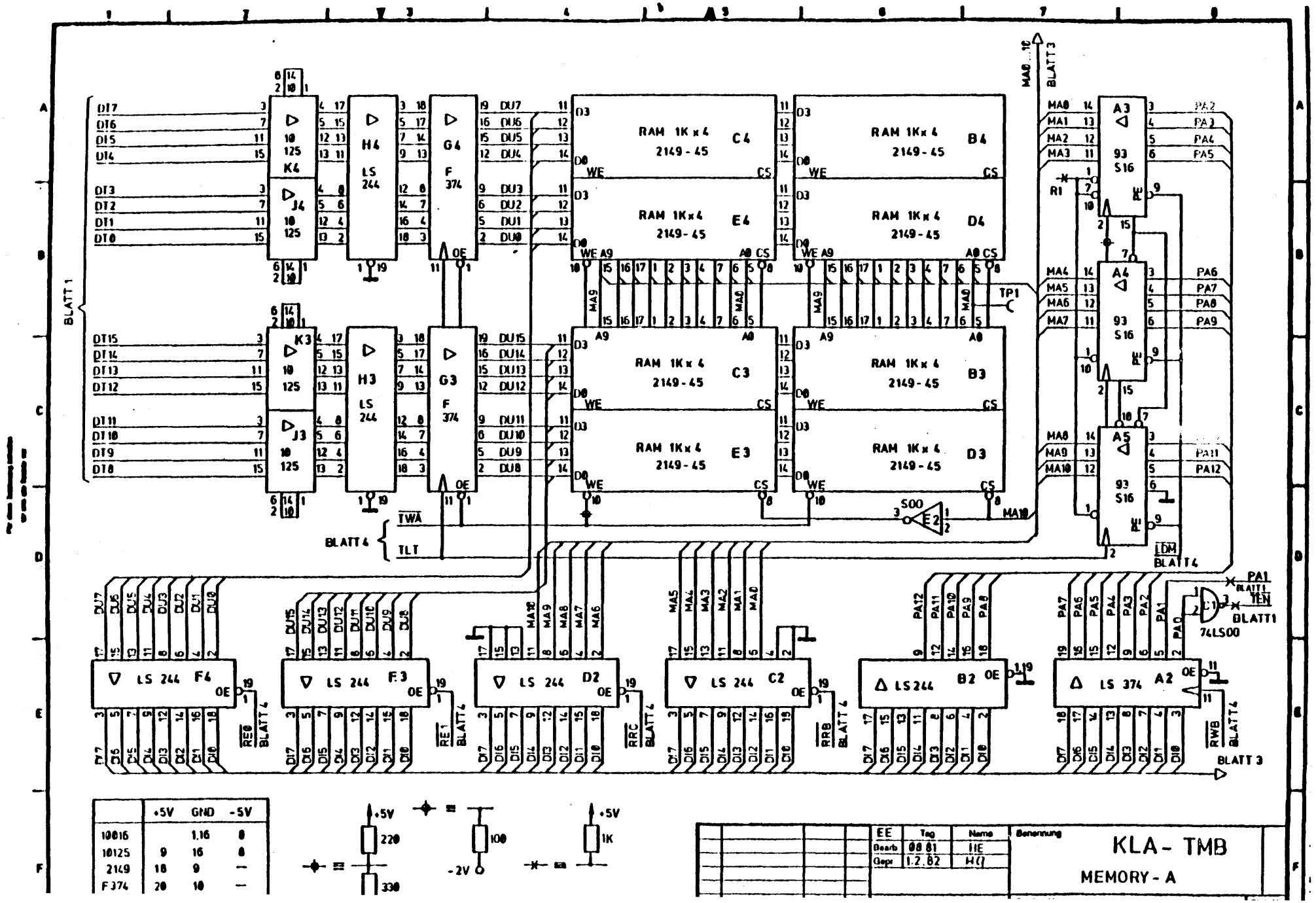

	+5V	GND	-5V
10016		1.16	8
10125	9	16	8
2149	18	9	—
F374	20	10	—

	EE	Tag	Name	Benennung
	Bearb.	08.81	HE	KLA - TMB
	Gepr.	1.2.82	HO	MEMORY - A

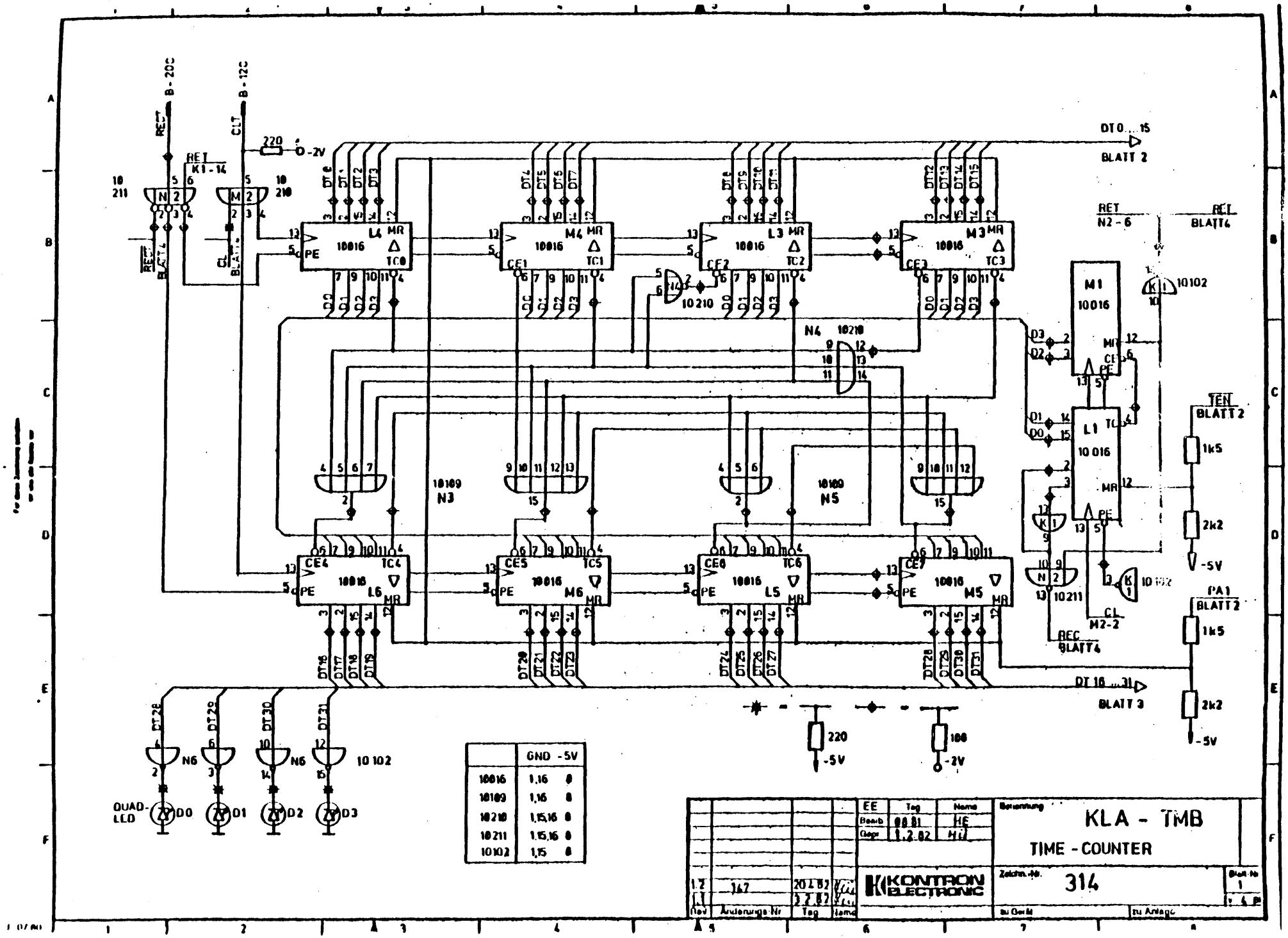

	GND	-5V
10016	1,16	8
10109	1,16	8
10210	1,15,16	8
10211	1,15,16	8
10102	1,15	8

				EE	Tag	Name
				Bearb	08.81	HE
				Gepr	1.2.82	Hil
1.2	147	20.1.82		KONTRON ELECTRONIC		
Rev	Aenderungs-Nr	Tag	Name			

Benennung: KLA - TMB

TIME - COUNTER

Zeichn.-Nr. 314

Blatt-Nr. 1

zu Gerät | zu Anlage

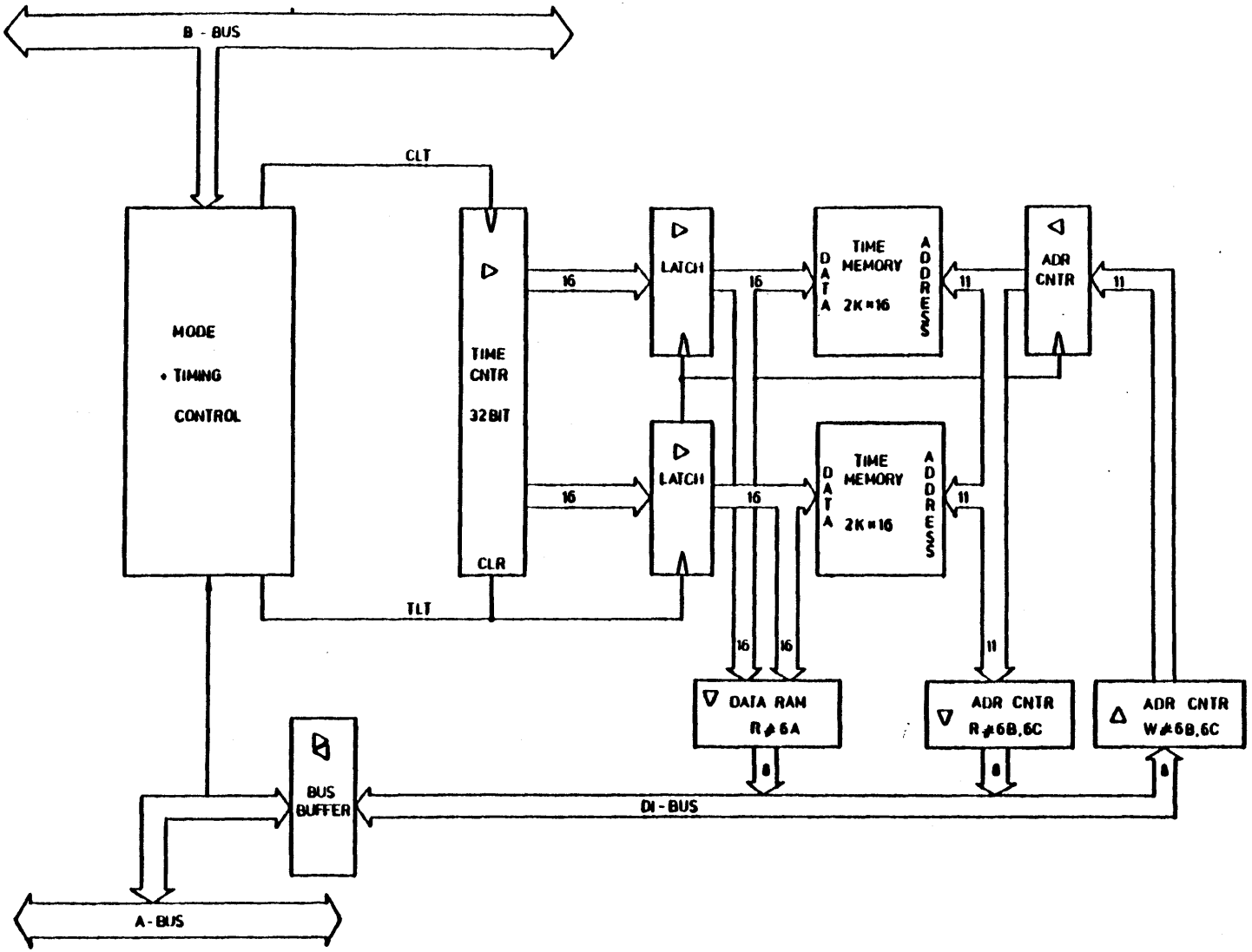

				EE	Tag	Name	Benennung
				Bearb	88.01	HE	KLA - TMB
				Gepr	1.2.02	Hill	TIME - MEMORY - BOARD
1.2	147	20.4.82		KONTRON ELECTRONIC			Zeichn.-Nr. 314
1.1		3.2.82					Blatt-Nr.

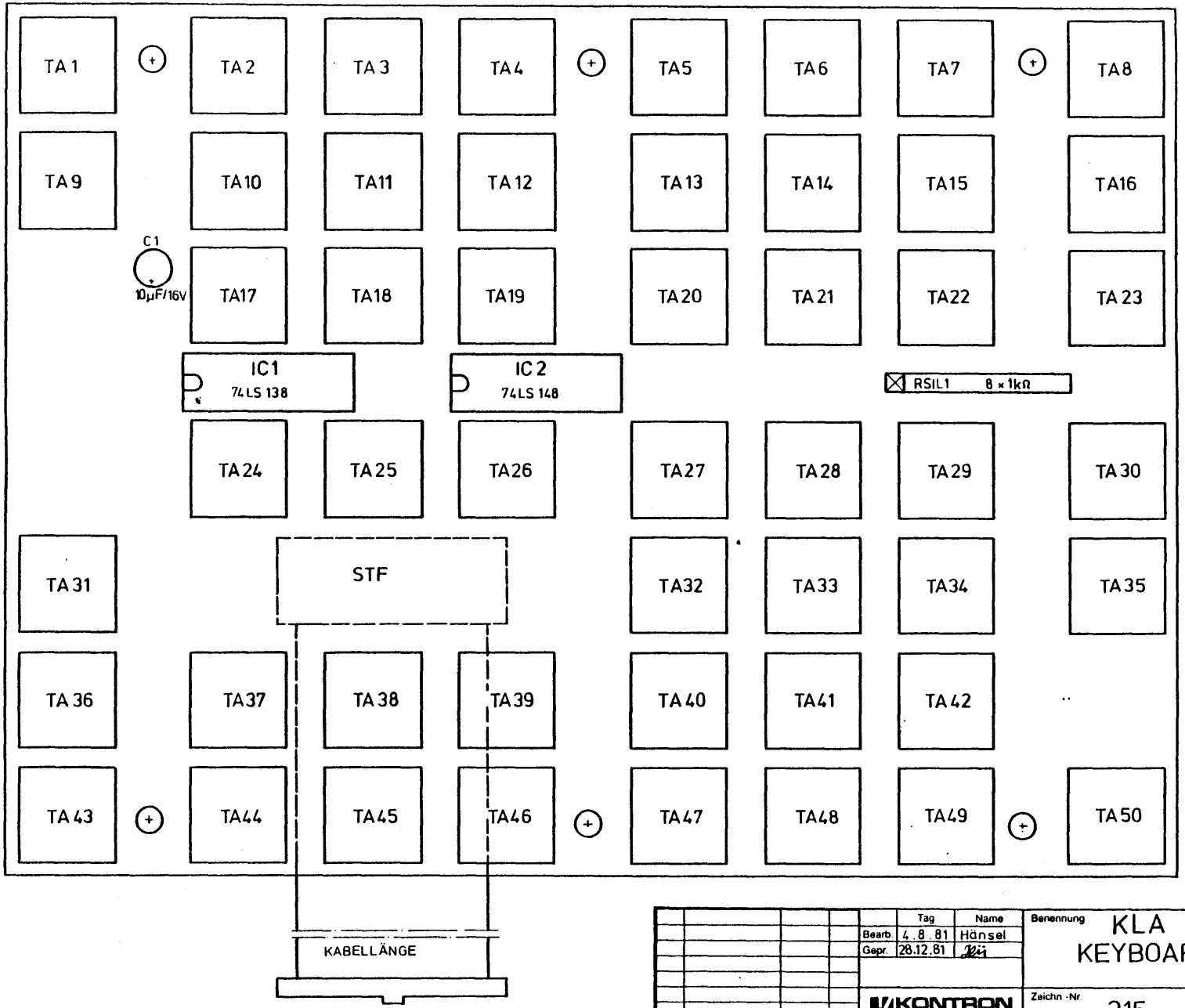

					Tag	Name	Benennung	KLA KEYBOARD
				Bearb.	4.8.81	Hänsel		
				Gepr.	28.12.81	[signature]		
11.		28.12.81	[signature]	KONTRON ELECTRONIC			Zeichn.-Nr. 315	Blatt-Nr. v. Bl.
Rev.	Änderungs-Nr.	Tag	Name				zu Gerät	zu Anlage

EE 0780

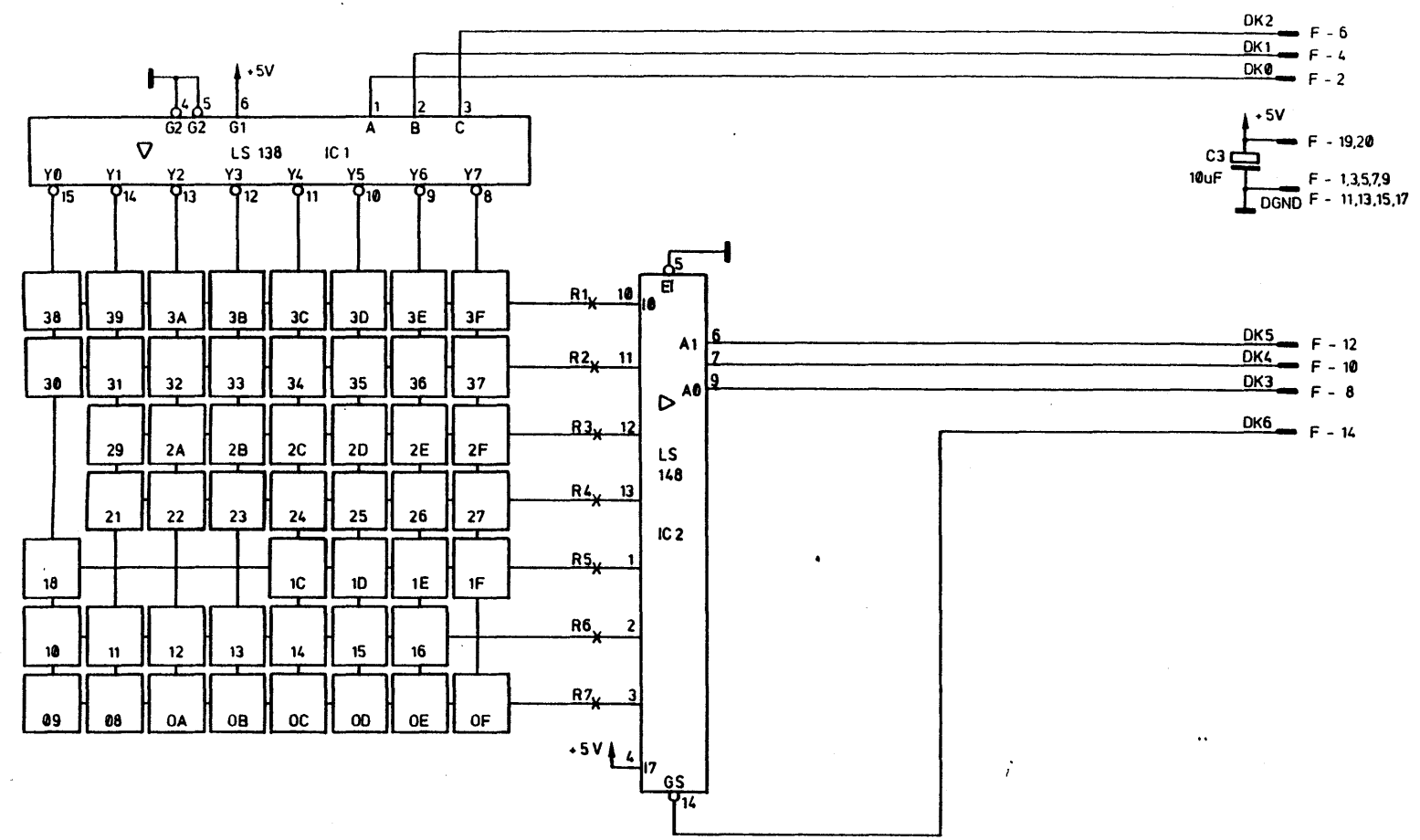

				EE	Tag	Name	Benennung	KLA
				Bearb.	08.81	HE		KEYBOARD
				Gepr.	28.12.81	Hei		
1.1.	Änderungs-Mitteilung	28.12.81	Hei	KONTRON ELECTRONIC	Zeichn.-Nr.	315	Blatt-Nr.	
Änd. Zust.		Tag	Name		zu Gerät	Ersatz für	v.	Bl

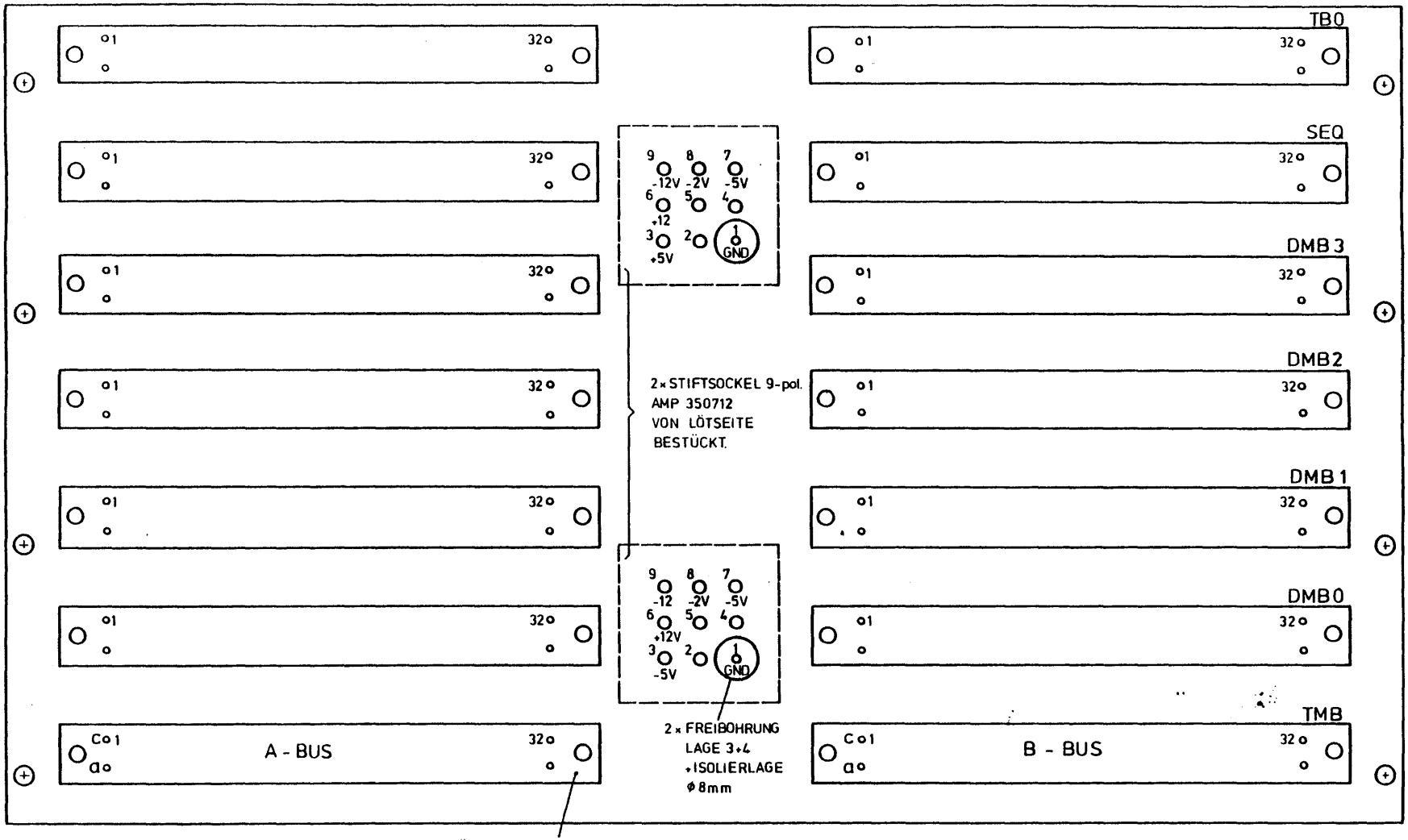

RÜCKVERDRAHTUNG 4-LAGIG:
- LAGE 1 (LÖTSEITE)
- LAGE 2
- ISOLIERFOLIE
- LAGE 3
- LAGE 4 (BESTÜCKUNGSSEITE)

		Tag	Name
Bearb.		4 8 81	Hänsel
Gepr.		3.2.82	HCl

Rev.	Änderungs-Nr.	Tag	Name
1.2		11.5.82	HCl
1.1		3.2.82	HCl

KONTRON ELECTRONIC

Benennung: KLA MOTHERBOARD

Zeichn.-Nr: 316

Blatt-Nr.: v. Bl.

zu Gerät | zu Anlage

A-BUS (TTL)

TBQ C		TBQ A	SEQ C		SEQ A	DMB 3 C		DMB 3 A	DMB 2 C		DMB 2 A	DMB 1 C		DMB 1 A	DMB 0 C		DMB 0 A	TMB C		TMB A
+5V	1	+5V	+5V	1	+5V	+5V	1	+5V	+5V	1	+5V	+5V	1	+5V	+5V	1	+5V	+5V	1	+5V
+5V	2	+5V	+5V	2	+5V	+5V	2	+5V	+5V	2	+5V	+5V	2	+5V	+5V	2	+5V	+5V	2	+5V
	3			3			3			3			3			3			3	
RA0	4	BS0/	RA0	4		RA0	4		RA0	4		RA0	4		RA0	4		RA0	4	
RA1	5	BS1/	RA1	5		RA1	5		RA1	5		RA1	5		RA1	5		RA1	5	
RA2	6	BS2/	RA2	6		RA2	6		RA2	6		RA2	6		RA2	6		RA2	6	
RA3	7	BS3/	RA3	7		RA3	7		RA3	7		RA3	7		RA3	7		RA3	7	
RA3/	8	BS4/	RA3/	8		RA3/	8		RA3/	8		RA3/	8		RA3/	8		RA3/	8	
	9	BS5/		9			9			9			9			9			9	
RSTB/	10	BS6/	RSTB/	10		RSTB/	10		RSTB/	10		RSTB/	10		RSTB/	10		RSTB/	10	
WSTB/	11		WSTB/	11	BS6/	WSTB/	11	BS3/	WSTB/	11	BS2/	WSTB/	11	BS1/	WSTB/	11	BS0/	WSTB/	11	BS0/
	12	GND		12	GND		12	GND		12	GND		12	GND		12	GND		12	GND
	13	GND		13	GND		13	GND		13	GND		13	GND		13	GND		13	GND
	14	GND		14	GND		14	GND		14	GND		14	GND		14	GND		14	GND
	15	GND		15	GND		15	GND		15	GND		15	GND		15	GND		15	GND
TRG	16	GND	TRG	16	GND	TRG	16	GND	TRG	16	GND	TRG	16	GND	TRG	16	GND	TRG	16	GND
DA0	17	GND	DA0	17	GND	DA0	17	GND	DA0	17	GND	DA0	17	GND	DA0	17	GND	DA0	17	GND
DA1	18	GND	DA1	18	GND	DA1	18	GND	DA1	18	GND	DA1	18	GND	DA1	18	GND	DA1	18	GND
DA2	19	GND	DA2	19	GND	DA2	19	GND	DA2	19	GND	DA2	19	GND	DA2	19	GND	DA2	19	GND
DA3	20	GND	DA3	20	GND	DA3	20	GND	DA3	20	GND	DA3	20	GND	DA3	20	GND	DA3	20	GND
DA4	21	GND	DA4	21	GND	DA4	21	GND	DA4	21	GND	DA4	21	GND	DA4	21	GND	DA4	21	GND
DA5	22	GND	DA5	22	GND	DA5	22	GND	DA5	22	GND	DA5	22	GND	DA5	22	GND	DA5	22	GND
DA6	23	GND	DA6	23	GND	DA6	23	GND	DA6	23	GND	DA6	23	GND	DA6	23	GND	DA6	23	GND
DA7	24	GND	DA7	24	GND	DA7	24	GND	DA7	24	GND	DA7	24	GND	DA7	24	GND	DA7	24	GND
	25	GND		25	GND	DA0	25	GND	DA4	25	GND	DA2	25	GND	DA0	25	GND		25	GND
	26	GND		26	GND	DA7	26	GND	DA5	26	GND	DA3	26	GND	DA1	26	GND		26	GND
CLP/	27	GND		27	GND	CLP/	27	GND	CLP/	27	GND	CLP/	27	GND	CLP/	27	GND		27	GND
	28	GND		28	GND		28	GND		28	GND		28	GND		28	GND		28	GND
+12V	29	+12V		29		+12V	29	+12V	+12V	29	+12V	+12V	29	+12V	+12V	29	+12V		29	
-12V	30	-12V		30		-12V	30	-12V	-12V	30	-12V	-12V	30	-12V	-12V	30	-12V		30	
GND	31	GND	GND	31	GND	GND	31	GND	GND	31	GND	GND	31	GND	GND	31	GND	GND	31	GND
GND	32	GND	GND	32	GND	GND	32	GND	GND	32	GND	GND	32	GND	GND	32	GND	GND	32	GND

B-BUS (ECL)

TBQ C		TBQ A	SEQ C		SEQ A	DMB 3 C		DMB 3 A	DMB 2 C		DMB 2 A	DMB 1 C		DMB 1 A	DMB 0 C		DMB 0 A	TMB C		TMB A
GND	1	GND	GND	1	GND	GND	1	GND	GND	1	GND	GND	1	GND	GND	1	GND	GND	1	GND
GND	2	GND	GND	2	GND	GND	2	GND	GND	2	GND	GND	2	GND	GND	2	GND	GND	2	GND
CL0/	3	SCL0		3	SCL0		3	GND		3	GND		3	GND		3	GND		3	GND
CL1/	4	SCL1		4	SCL1		4	GND		4	GND		4	GND		4	GND		4	GND
CL2/	5	SCL2		5	SCL2		5	GND		5	GND		5	GND		5	GND		5	GND
CL3/	6	SCL3		6	SCL3	CL3/	6	GND	CL2/	6	GND	CL1/	6	GND	CL0/	6	GND		6	GND
CLM	7	GND	CLM	7	GND		7	GND		7	GND		7	GND		7	GND		7	GND
ILA1	8	GND		8	GND		8	GND		8	GND		8	GND		8	GND		8	GND
ILB1	9	GND		9	GND		9	GND		9	GND		9	GND		9	GND		9	GND
ILA2	10	GND		10	GND	ILA2	10	GND	ILA2	10	GND	ILA1	10	GND	ILA1	10	GND		10	GND
ILB2	11	GND		11	GND	ILB2	11	GND	ILB2	11	GND	ILB1	11	GND	ILB1	11	GND		11	GND
	12	GND	CLT	12	GND		12	GND		12	GND		12	GND		12	GND	CLT	12	GND
CL10	13	GND	CL10	13	GND		13	GND		13	GND		13	GND		13	GND		13	GND
-2V	14	-2V	-2V	14	-2V	-2V	14	-2V	-2V	14	-2V	-2V	14	-2V	-2V	14	-2V	-2V	14	-2V
CL100	15	GND	CL100	15	GND		15	GND		15	GND		15	GND		15	GND		15	GND
	16		REC0	16			16	GND		16	GND		16	GND		16	GND		16	GND
	17		REC1	17			17	GND		17	GND		17	GND		17	GND		17	GND
	18		REC2	18			18	GND		18	GND		18	GND		18	GND		18	GND
	19	CLMS0	REC3	19	CLMS0	REC3	19	GND	REC2	19	GND	REC1	19	GND	REC0	19	GND		19	GND
	20	CLMS1	RECT	20	CLMS1		20	GND		20	GND		20	GND		20	GND	RECT	20	GND
	21	GND	CND0/	21	GND	CND0/	21	GND	CND0/	21	GND	CND0/	21	GND	CND0/	21	GND		21	GND
	22	GND	CND1/	22	GND	CND1/	22	GND	CND1/	22	GND	CND1/	22	GND	CND1/	22	GND		22	GND
	23	GND	CND2/	23	GND	CND2/	23	GND	CND2/	23	GND	CND2/	23	GND	CND2/	23	GND		23	GND
	24	GND	CND3/	24	GND	CND3/	24	GND	CND3/	24	GND	CND3/	24	GND	CND3/	24	GND		24	GND
	25	GND	TCLK	25	GND	TCLK	25	GND	TCLK	25	GND	TCLK	25	GND	TCLK	25	GND		25	GND
	26	GND	GLIT	26	GND	GLIT	26	GND	GLIT	26	GND	GLIT	26	GND	GLIT	26	GND		26	GND
	27	ARM/	SLV0	27	ARM/	SLV0	27	ARM/	SLV0	27	ARM/	SLV0	27	ARM/	SLV0	27	ARM/		27	ARM/
	28	INIT/	SLV1	28	INIT/	SLV1	28		SLV1	28		SLV1	28		SLV1	28			28	INIT/
	29	ILAC1/	SLV2	29		SLV2	29		SLV2	29		SLV2	29		SLV2	29			29	
	30	ILAC2/	SLV3	30		SLV3	30	ILAC2/	SLV3	30	ILAC1/	SLV3	30	ILAC1/	SLV3	30	ILAC1/		30	
-5V	31	-5V	-5V	31	-5V	-5V	31	-5V	-5V	31	-5V	-5V	31	-5V	-5V	31	-5V	-5V	31	-5V
-5V	32	-5V	-5V	32	-5V	-5V	32	-5V	-5V	32	-5V	-5V	32	-5V	-5V	32	-5V	-5V	32	-5V

Rev.	Änderungs-Nr.	Tag	Name
1.2		11.5.82	
1.1		2.12.81	

	Tag	Name
EE		
Bearb.	08.81	HE
Gepr.	2.12.81	

KONTRON ELECTRONIC

Benennung: KLA
LA - MOTHERBOARD

Zeichn.-Nr.: 316

Blatt-Nr.: v. 8I

zu Gerät | zu Anlage

EE-07.80

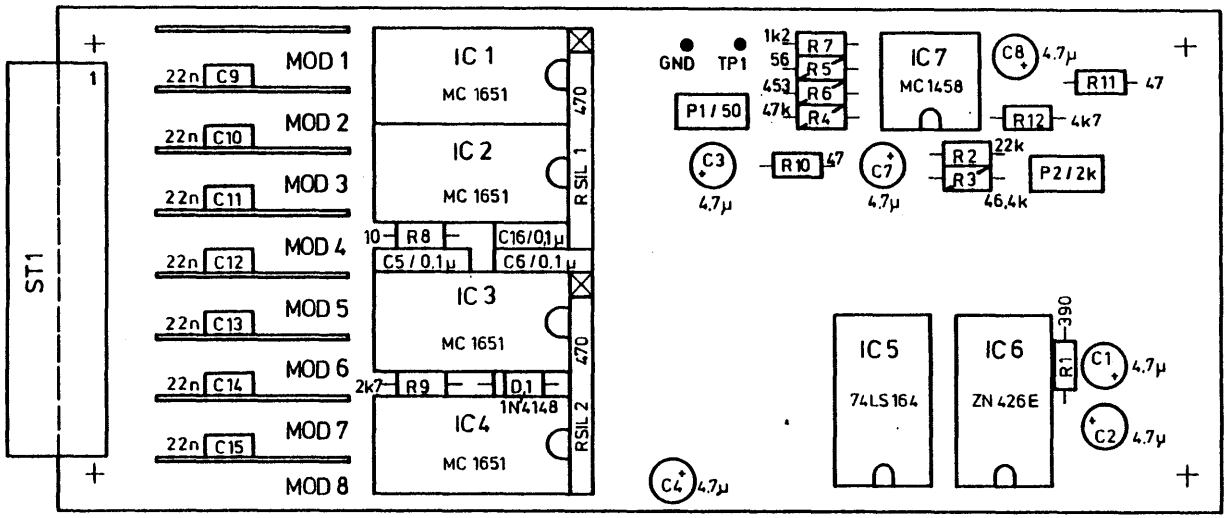

0,5% METALLSCHICHT

					Tag	Name	Benennung
				Bearb	19.7.82	Hänsel	KLA - Tastkopf
				Gepr.	21.7.82	Keci	LP8 - HYBRID
1.2		23.11.83	Ro	KONTRON ELECTRONIC			Zeichn.-Nr. 419
1.1		19.7.82	Hä				Blatt-Nr. v. Bl
Rev.	Änderungs-Nr.	Tag	Name				zu Gerät / zu Anlage

EE 07 80

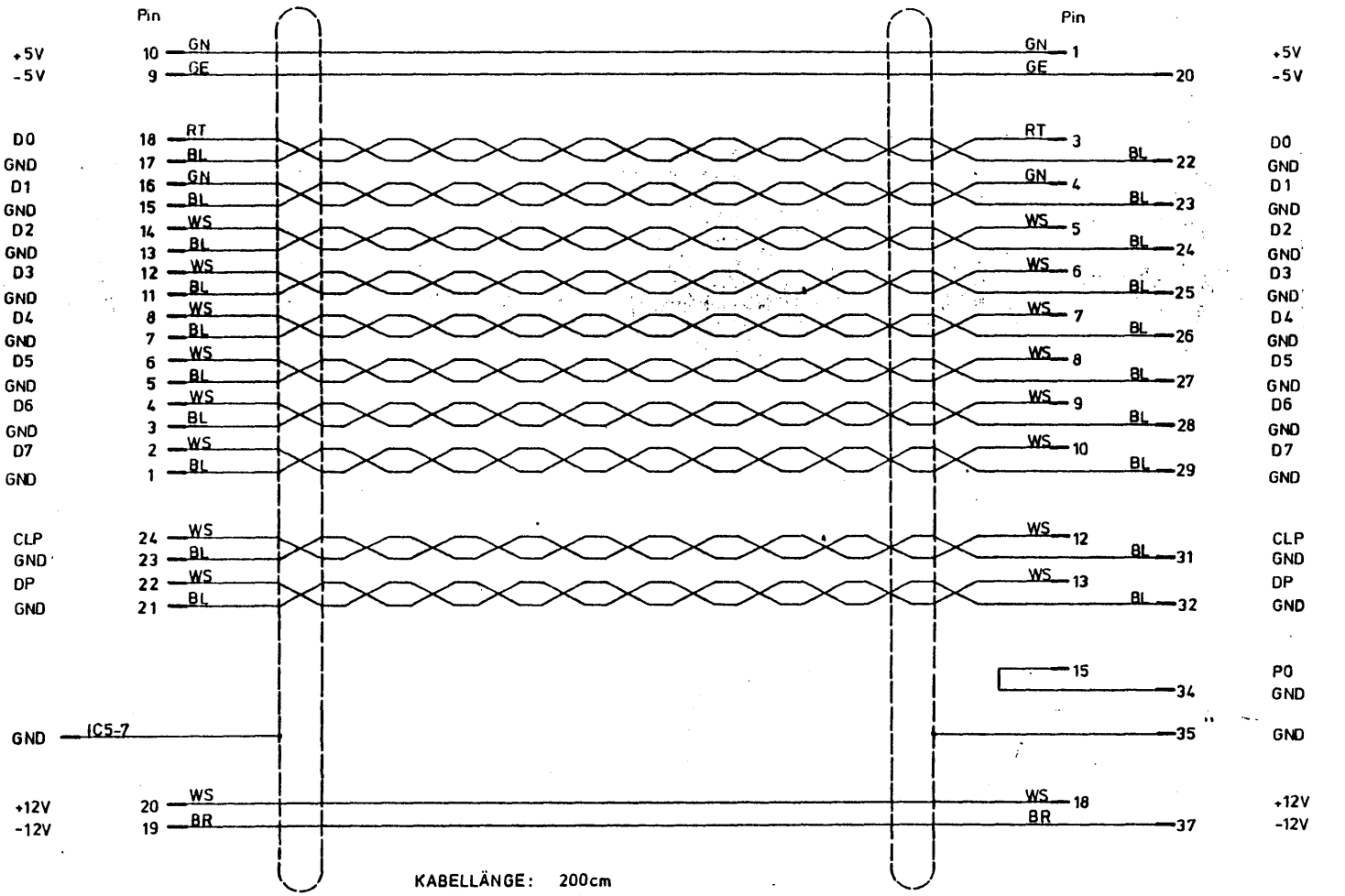

KABELLÄNGE: 200cm
KABEL: METROFUNK
TYP: 4 × LIY - AWG 26 } - CY
+10×2LIY - AWG 28 } SCHWARZ

Rev.	Änderungs-Nr.	Tag	Name
1.2		23.11.83	Ki
1.1		19.7.82	Reit

	Tag	Name
Bearb.	19.7.82	Hänsel
Gepr.	21.7.82	Reit

KONTRON ELECTRONIC

Benennung KLA
TASTKOPF - KABEL
LP8 - HYBRID

Zeichn.-Nr 419
Blatt-Nr. v. Bl.
zu Gerat
zu Anlage

EE-07 80

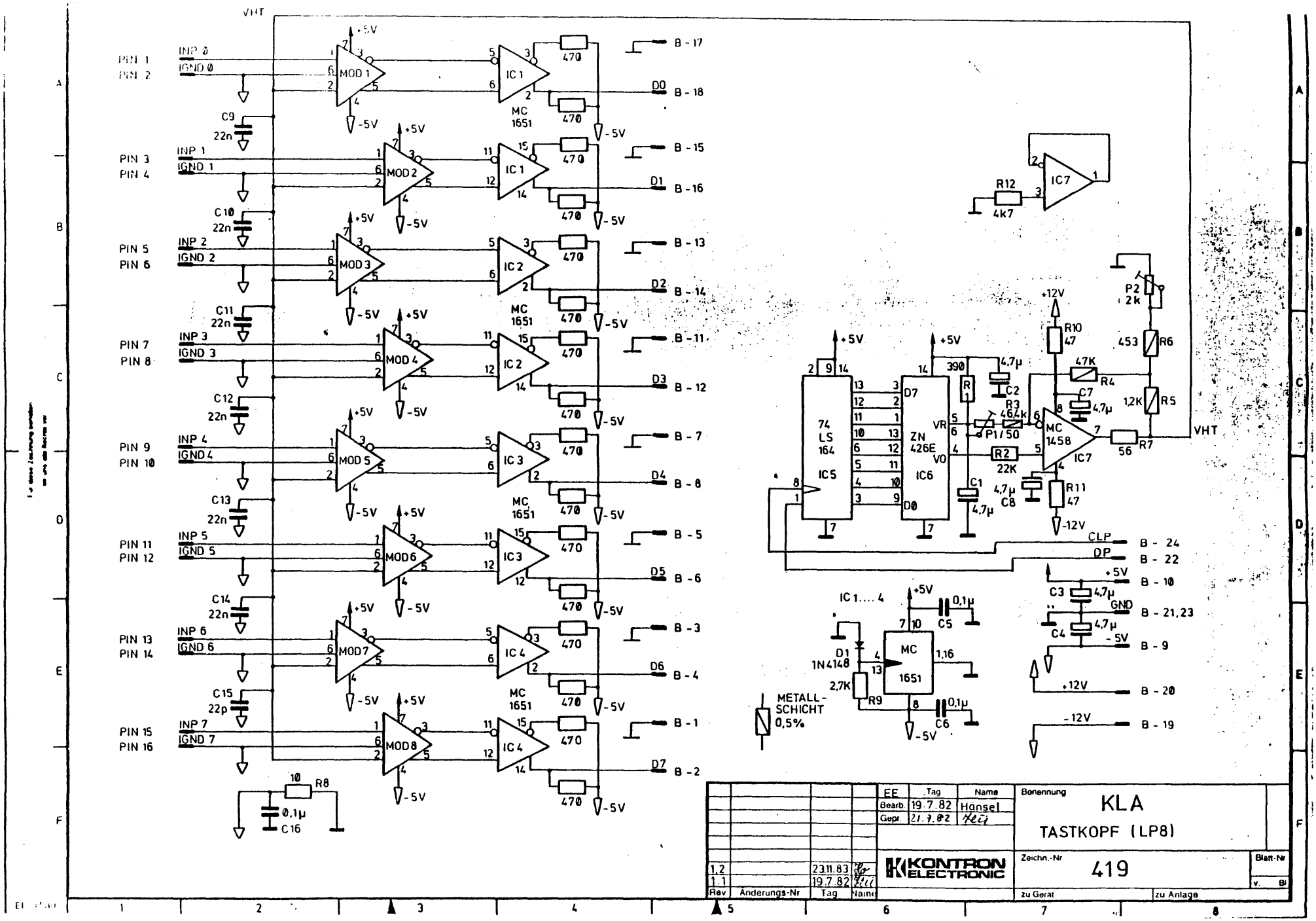
VHT
PIN 1
PIN 2
INP 0
IGND 0
MOD 1
IC 1
MC 1651
470
B - 17
D0
B - 18
C9 22n
PIN 3
PIN 4
INP 1
IGND 1
MOD 2
B - 15
D1
B - 16
C10 22n
PIN 5
PIN 6
INP 2
IGND 2
MOD 3
IC 2
B - 13
D2
B - 14
C11 22n
PIN 7
PIN 8
INP 3
IGND 3
MOD 4
B - 11
D3
B - 12
C12 22n
PIN 9
PIN 10
INP 4
IGND 4
MOD 5
IC 3
B - 7
D4
B - 8
C13 22n
PIN 11
PIN 12
INP 5
IGND 5
MOD 6
B - 5
D5
B - 6
C14 22n
PIN 13
PIN 14
INP 6
IGND 6
MOD 7
IC 4
B - 3
D6
B - 4
C15 22p
PIN 15
PIN 16
INP 7
IGND 7
MOD 8
B - 1
D7
B - 2
+5V
-5V
R8 10
C16 0,1µ
IC7
R12 4k7
P2 2k
R6 453
R5 1,2K
R7 56
R4 47K
R3 464k
P1/50
R2 22K
R10 47
R11 47
C2 4,7µ
C7 4,7µ
C8 4,7µ
C1 4,7µ
R 390
+12V
-12V
74 LS 164
IC5
ZN 426E
IC6
MC 1458
CLP
DP
B - 24
B - 22
B - 10
C3 4,7µ
C4 4,7µ
GND
B - 21,23
B - 9
B - 20
B - 19
IC 1.... 4
C5 0,1µ
C6 0,1µ
D1 1N4148
R9 2,7K
MC 1651
1,16
METALL-SCHICHT 0,5%
EE
Tag
Name
Benennung
KLA
Bearb. 19.7.82 Hänsel
Gepr. 21.7.82
TASTKOPF (LP8)
KONTRON ELECTRONIC
Zeichn.-Nr
419
Blatt-Nr
zu Gerät
zu Anlage
1.2 23.11.83
1.1 19.7.82
Rev
Änderungs-Nr
Tag
Name

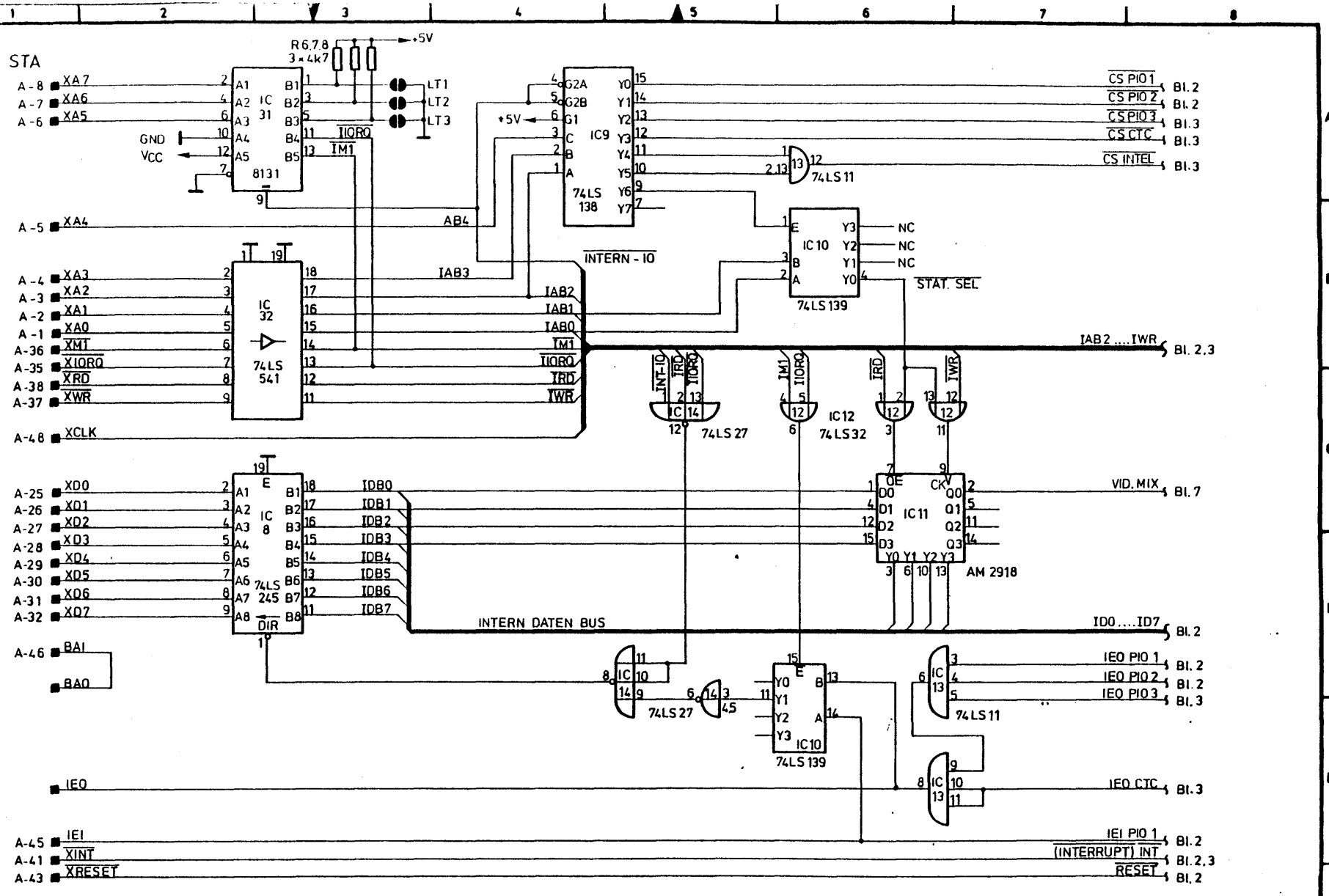

	Tag	Name
Bearb.	26.7.82	Hänsel
Gepr.	12.10.82	

Benennung: BUS BUFFER & ADDRESS DECODER

KONTRON ELECTRONIC

Zeichn.-Nr: 1014

Blatt-Nr.: 1 v. 8 Bl

Rev.	Änderungs-Nr.	Tag	Name
1.2		12.10.82	

zu Gerat | zu Anlage

EE 07 80

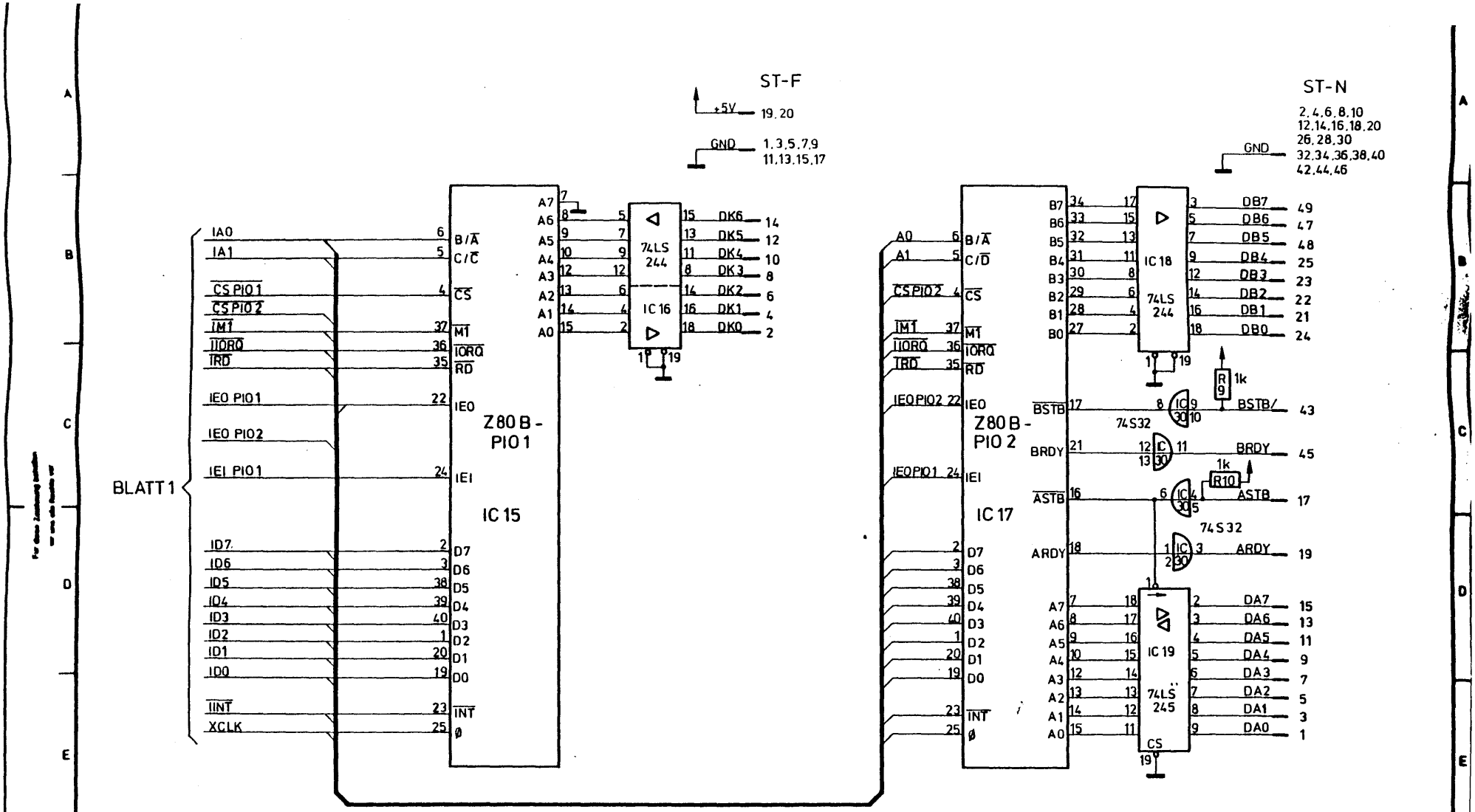

	+5V	GND
Z80A - PIO	26	11
74LS244	20	10
74LS245	20	10
74S32	14	7

	Tag	Name
Bearb.	27.7.82	Hänsel
Gepr.	12.10.82	Rl.

Benennung: KLA - INTERFACE

KONTRON ELECTRONIC

Zeichn.-Nr.: 1014

Blatt-Nr.: 2 v. 8 Bl

Rev.	Änderungs-Nr.	Tag	Name
1.2		12.10.82	Rl.

zu Gerät | zu Anlage

EE-07 80

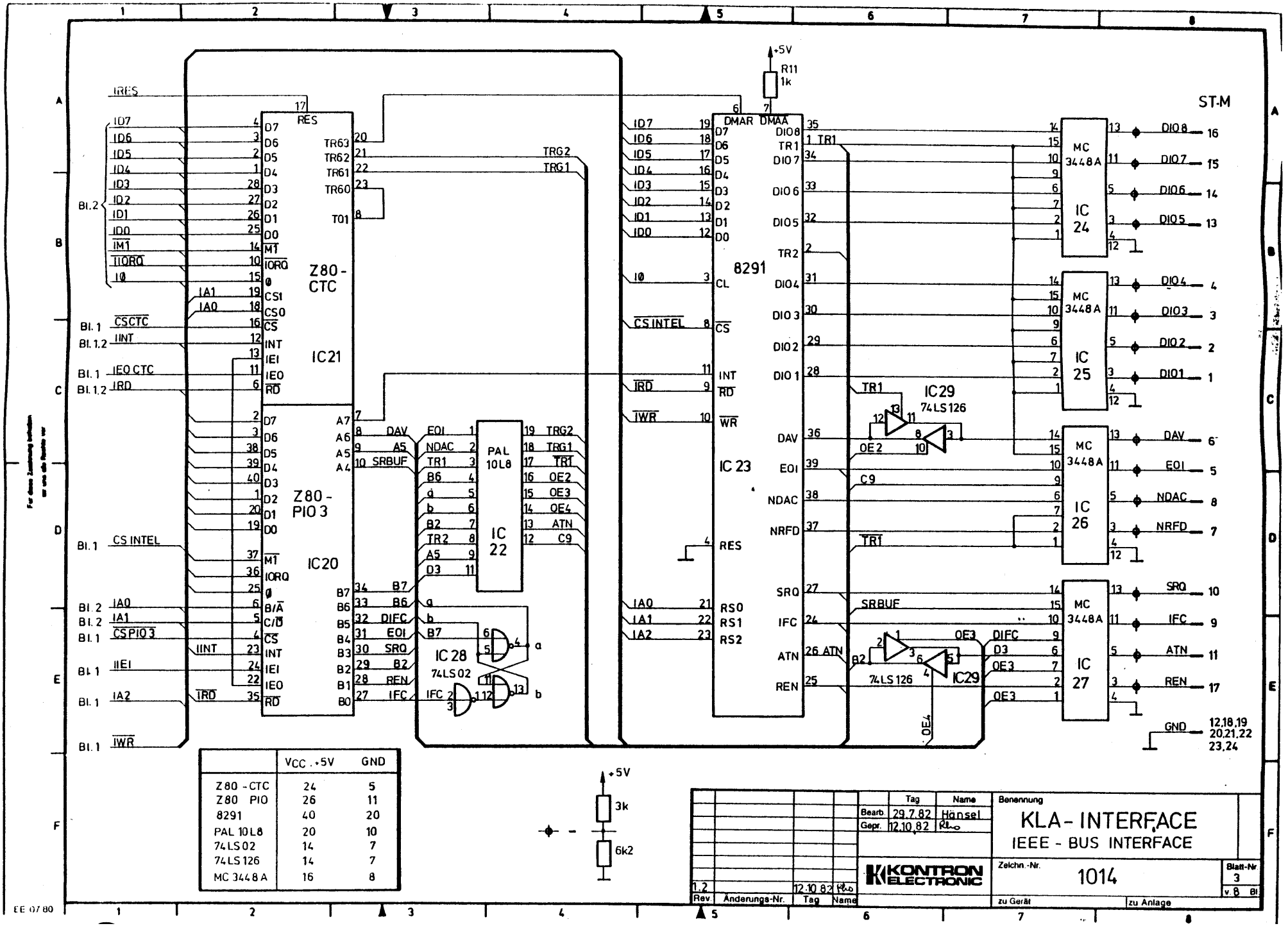

	VCC +5V	GND
Z80 - CTC	24	5
Z80 PIO	26	11
8291	40	20
PAL 10L8	20	10
74LS02	14	7
74LS126	14	7
MC 3448 A	16	8

	Tag	Name
Bearb.	29.7.82	Hänsel
Gepr.	12.10.82	Rho

Benennung

KLA - INTERFACE

IEEE - BUS INTERFACE

KONTRON ELECTRONIC

Zeichn.-Nr. 1014

Blatt-Nr. 3

v. 8 Bl.

zu Gerät

zu Anlage

Rev.	Änderungs-Nr.	Tag	Name
1.2		12.10.82	Rho

EE 07 80

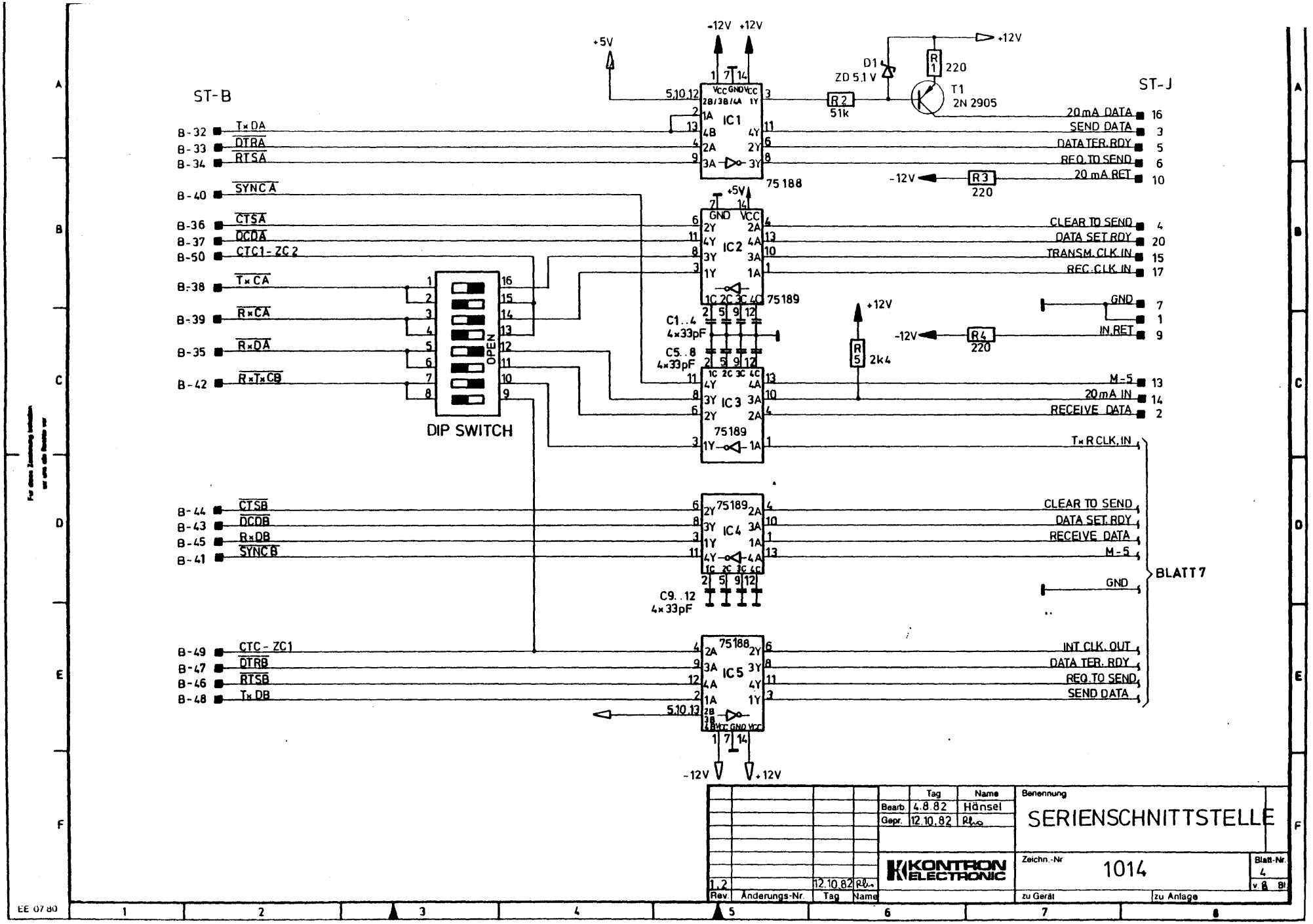

	Tag	Name
Bearb.	4.8.82	Hänsel
Gepr.	12.10.82	Rl.

Benennung: SERIENSCHNITTSTELLE

KONTRON ELECTRONIC

Zeichn.-Nr: 1014

Blatt-Nr: 4

Rev.	Änderungs-Nr.	Tag	Name
1.2		12.10.82	Rl.

zu Gerät | zu Anlage

EE 07 80

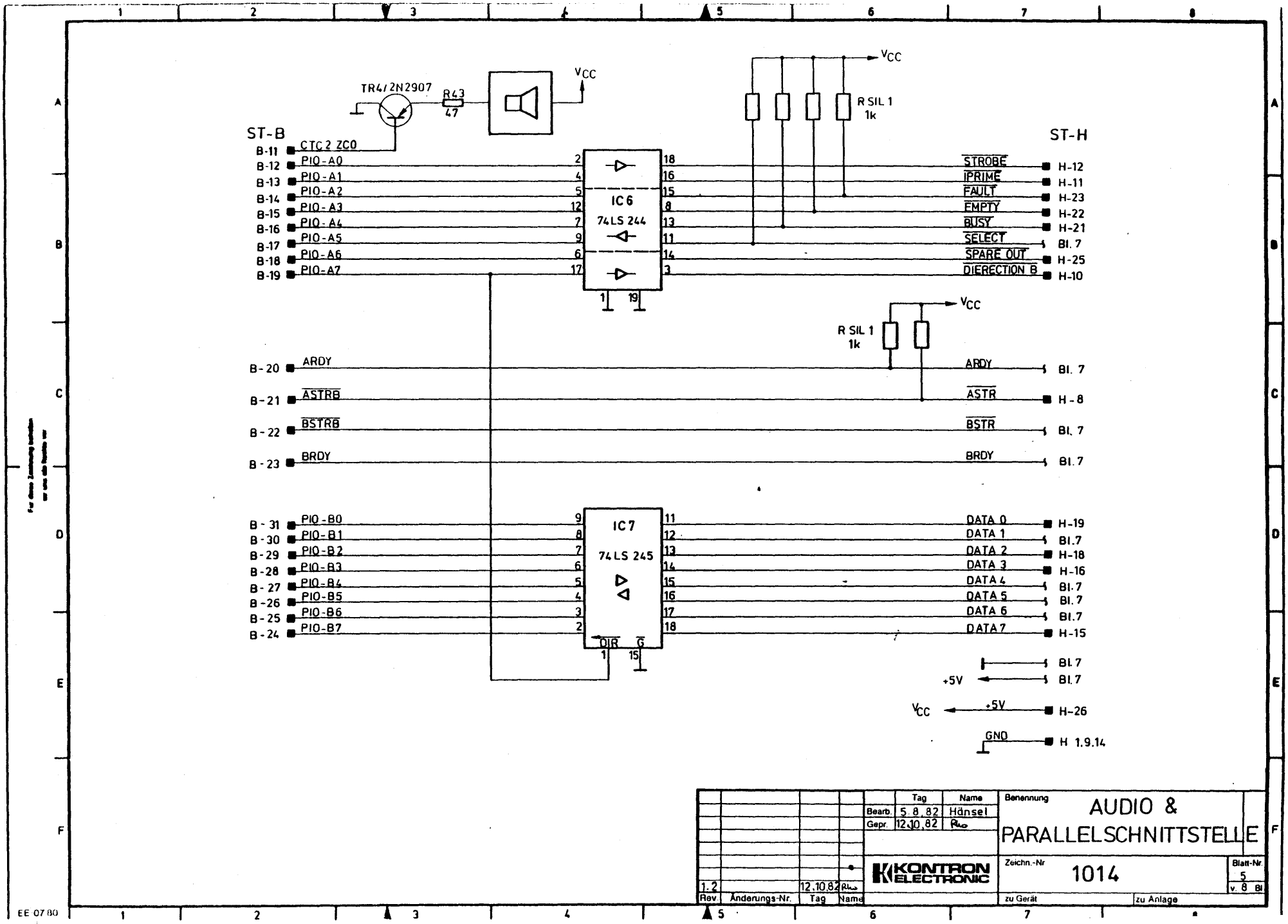

TR4/2N2907
R43
47
VCC
R SIL 1
1k
ST-B
ST-H
B-11 CTC 2 ZC0
B-12 PIO-A0
B-13 PIO-A1
B-14 PIO-A2
B-15 PIO-A3
B-16 PIO-A4
B-17 PIO-A5
B-18 PIO-A6
B-19 PIO-A7
IC 6
74 LS 244
STROBE H-12
IPRIME H-11
FAULT H-23
EMPTY H-22
BUSY H-21
SELECT Bl. 7
SPARE OUT H-25
DIERECTION B H-10
B-20 ARDY
B-21 ASTRB
B-22 BSTRB
B-23 BRDY
ARDY Bl. 7
ASTR H-8
BSTR Bl. 7
BRDY Bl. 7
B-31 PIO-B0
B-30 PIO-B1
B-29 PIO-B2
B-28 PIO-B3
B-27 PIO-B4
B-26 PIO-B5
B-25 PIO-B6
B-24 PIO-B7
IC 7
74 LS 245
DIR
G
DATA 0 H-19
DATA 1 Bl.7
DATA 2 H-18
DATA 3 H-16
DATA 4 Bl.7
DATA 5 Bl.7
DATA 6 Bl.7
DATA 7 H-15
Bl. 7
+5V Bl. 7
VCC +5V H-26
GND H 1.9.14
Tag Name
Bearb. 5.8.82 Hänsel
Gepr. 12.10.82
Benennung
AUDIO &
PARALLELSCHNITTSTELLE
KONTRON ELECTRONIC
Zeichn.-Nr 1014
Blatt-Nr. 5
v. 8 Bl
1.2 12.10.82
Rev. Änderungs-Nr. Tag Name
zu Gerät
zu Anlage
EE 07 80

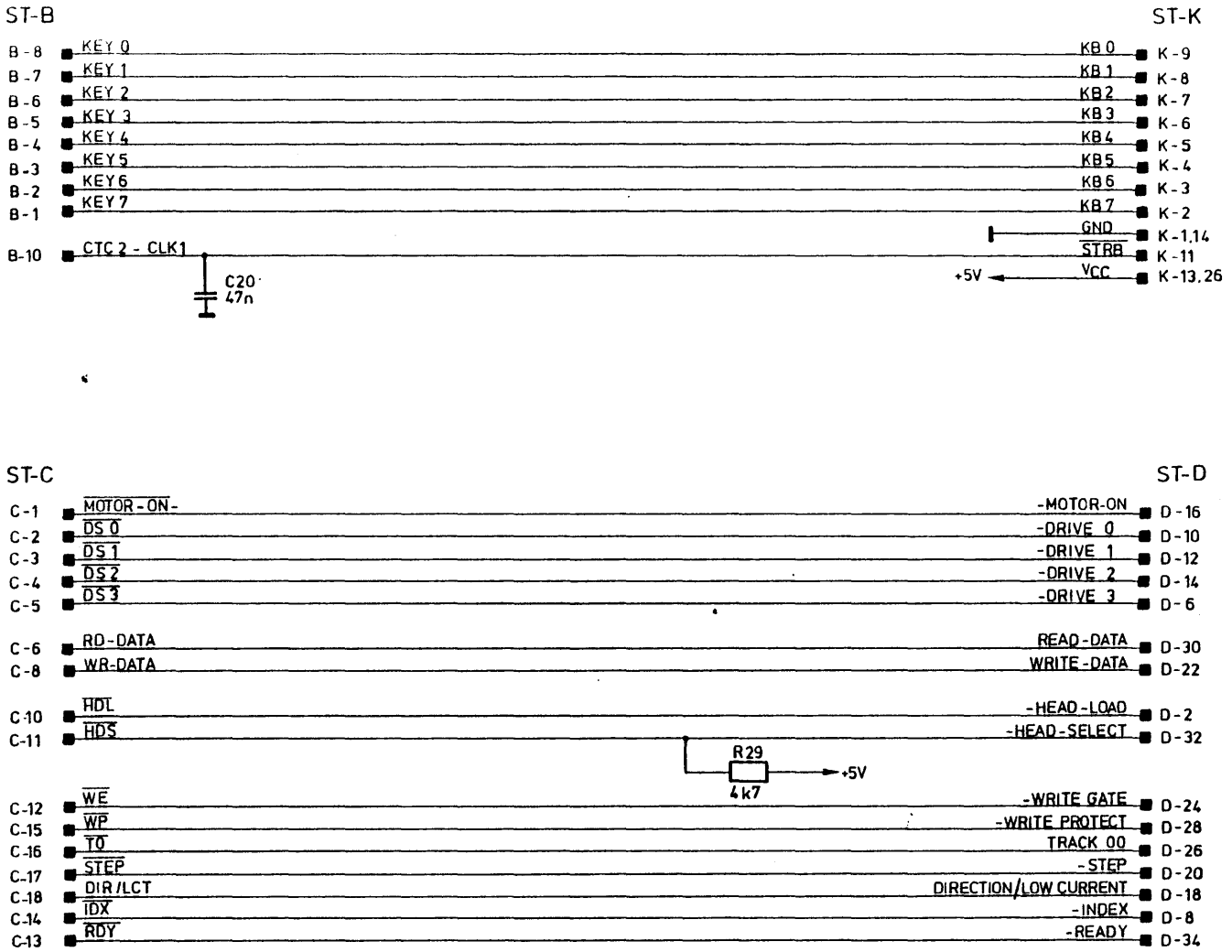

					Tag	Name	Benennung
				Bearb.	5.8.82	Hansel	FLOPPY DISK&KEYBOARD INTERFACE
				Gepr.	12.10.82		
				KONTRON ELECTRONIC			Zeichn.-Nr. 1014
							Blatt-Nr. 6 v. 8 Bl
1.2		12.10.82					
Rev.	Änderungs-Nr.	Tag	Name	zu Gerät		zu Anlage	

EE 07 80

1 2 3 4 5 6 7 8

A B C D E F

ST-H

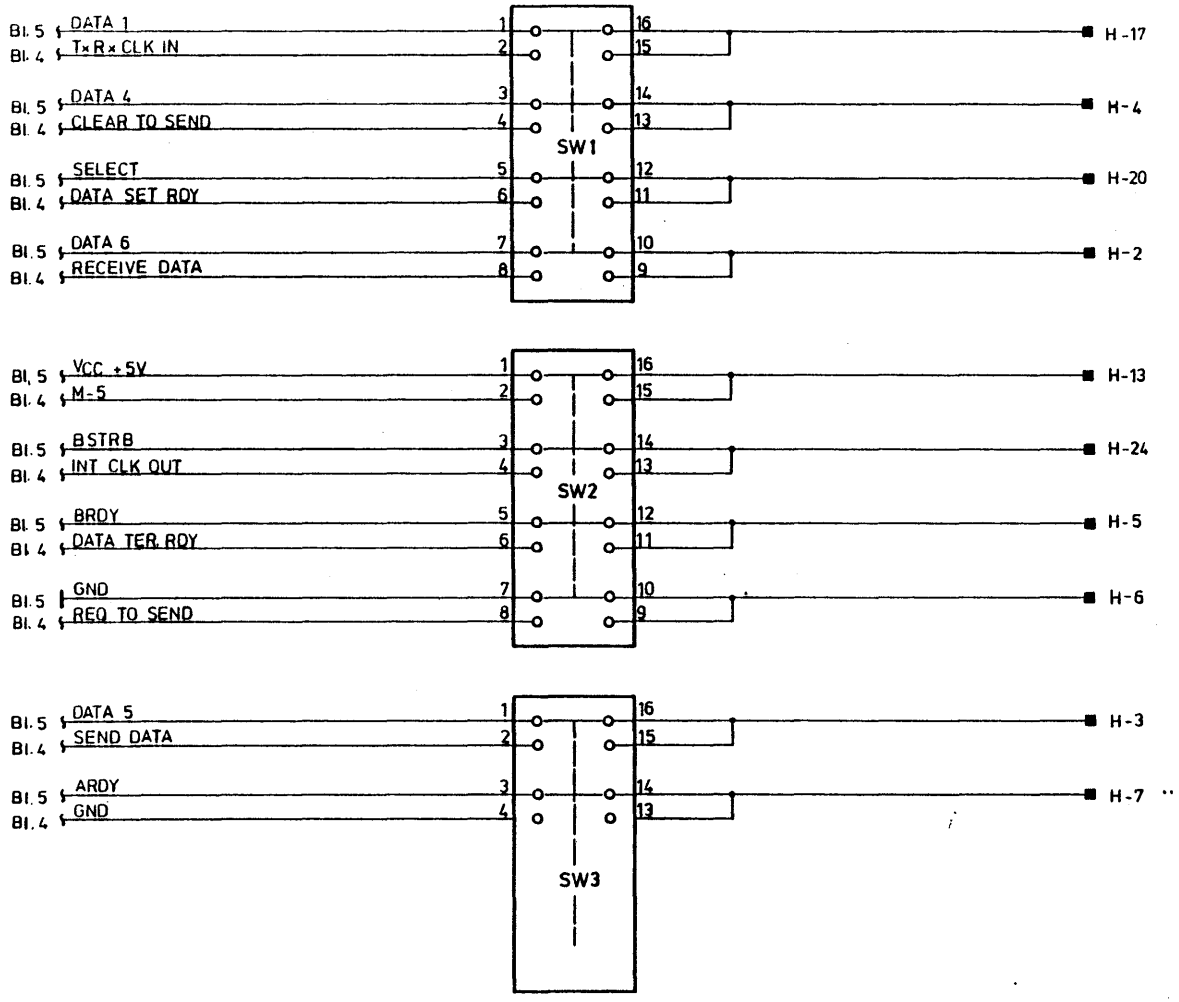

3 × SUPER DIL DS 16B 4-2

Rev.	Änderungs-Nr.	Tag	Name
1.2		12.10.82	Ro

	Tag	Name
Bearb.	9.8.82	Hänsel
Gepr.	12.10.82	Ro

KONTRON ELECTRONIC

Benennung: SERIEN - PARALLEL UMSCHALTER

Zeichn.-Nr: 1014

Blatt-Nr: 7 v. 8 Bl.

zu Gerät

zu Anlage

EE-07/80

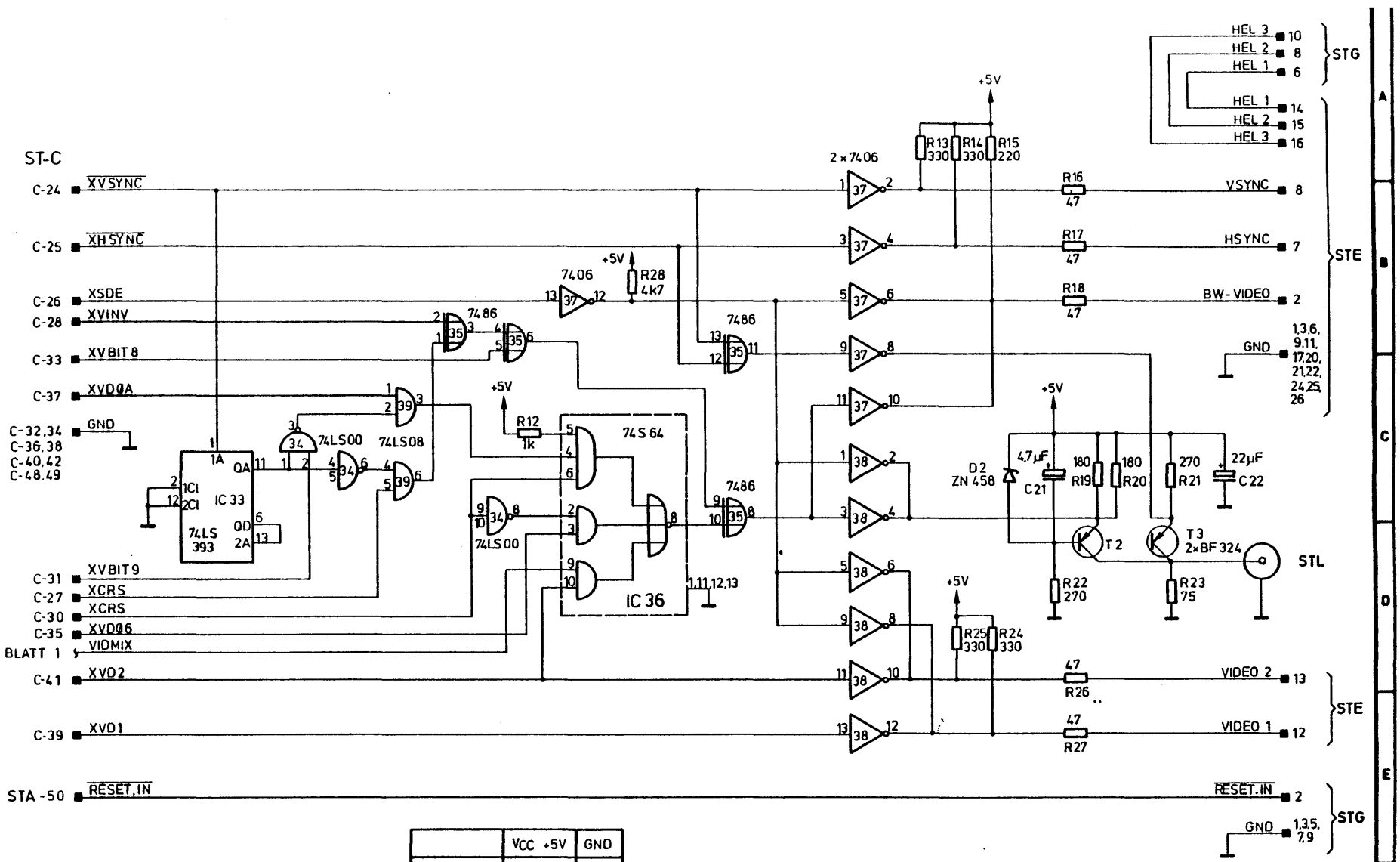

	Vcc +5V	GND
74 06	14	7
74 86	14	7
74 S 64	14	7
74LS 00	14	7
74LS 08	14	7
74LS 393	14	7

	Tag	Name
Bearb.	10.8.82	Hänsel
Gepr.	12.10.82	Pl.

KONTRON ELECTRONIC

Benennung: KLA - INTERFACE VIDEO - OUTPUT

Zeichn.-Nr.: 1014

Blatt-Nr.: 8 v. 8 Bl.

Rev.	Änderungs-Nr.	Tag	Name
1.2		12.10.82	Pl.

zu Gerat | zu Anlage

EE 07 80

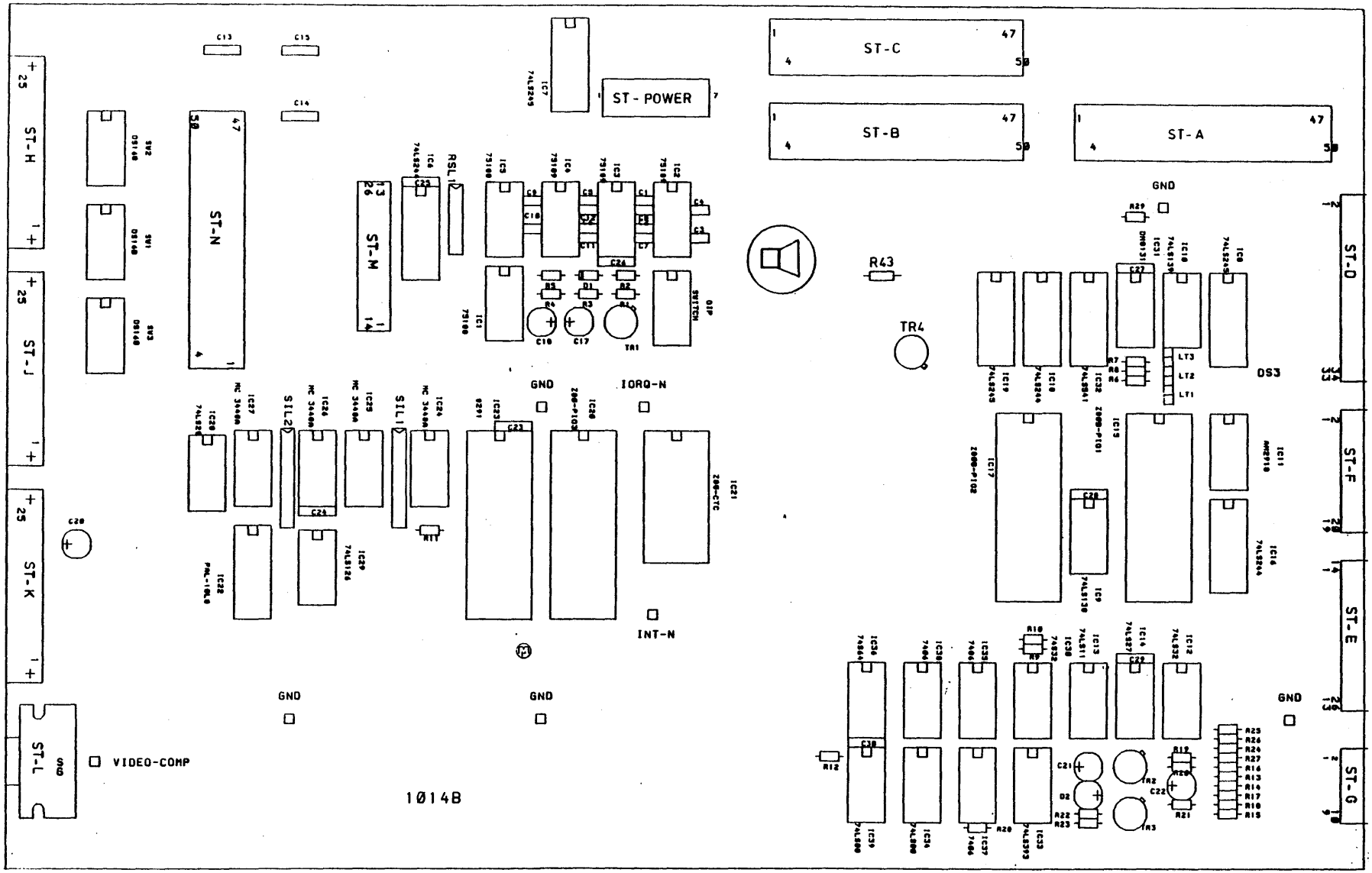

			Tag	Name	Benennung
		Bearb.	20.10.82	Hä.	KLA - INTERFACE
		Gepr.	20.10.82		
1.2	20.10.82				Zeichn.-Nr. 1014
Ausg.	Änderungs-Nr.	Tag	Name		

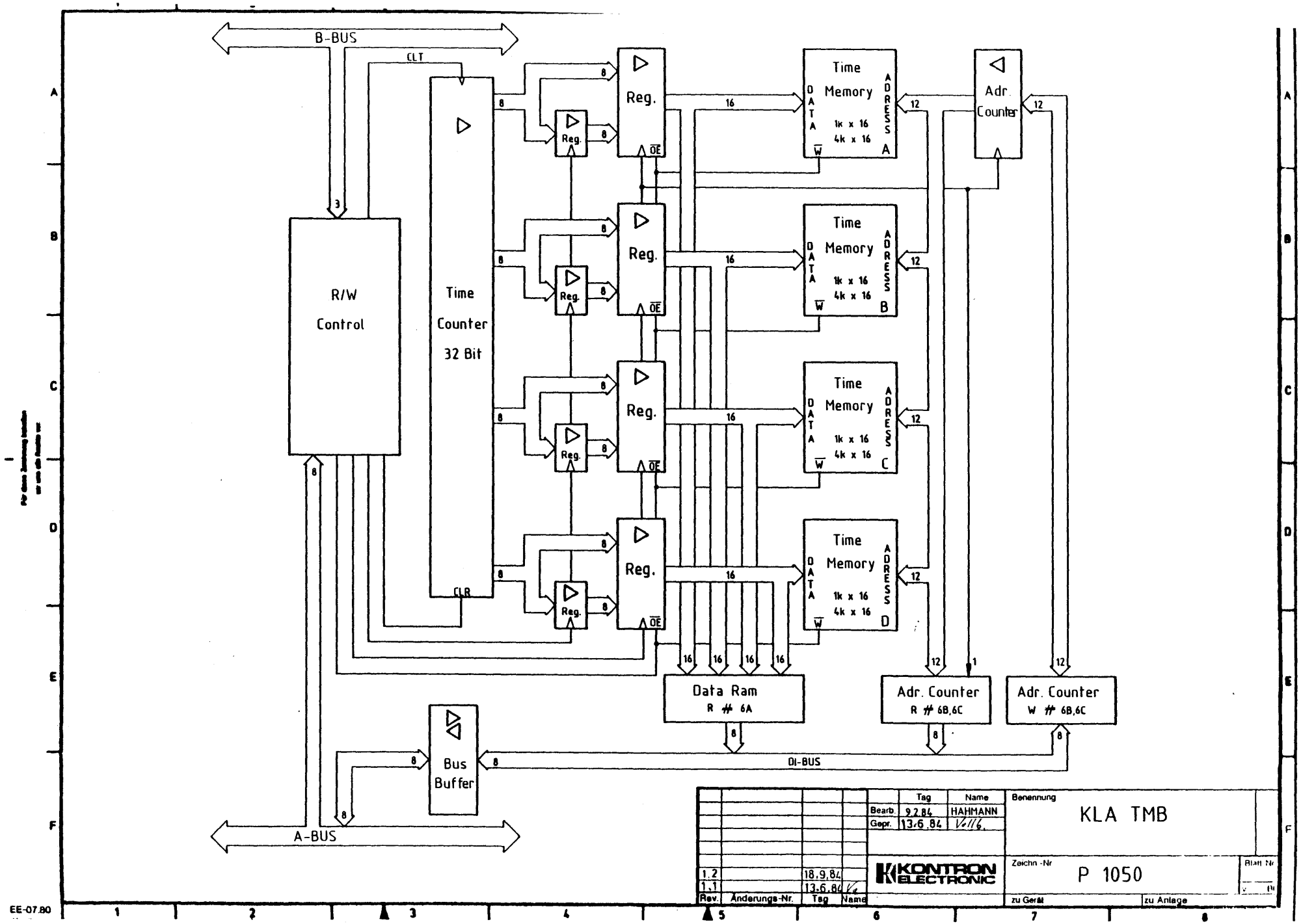

	Tag	Name
Bearb.	9.2.84	HAHMANN
Gepr.	13.6.84	Volle.

Benennung: KLA TMB

KONTRON ELECTRONIC

Zeichn.-Nr: P 1050

Blatt Nr.

zu Gerät | zu Anlage

Rev.	Änderungs-Nr.	Tag	Name
1.2		18.9.84	
1.1		13.6.84	Ve

EE-07.80

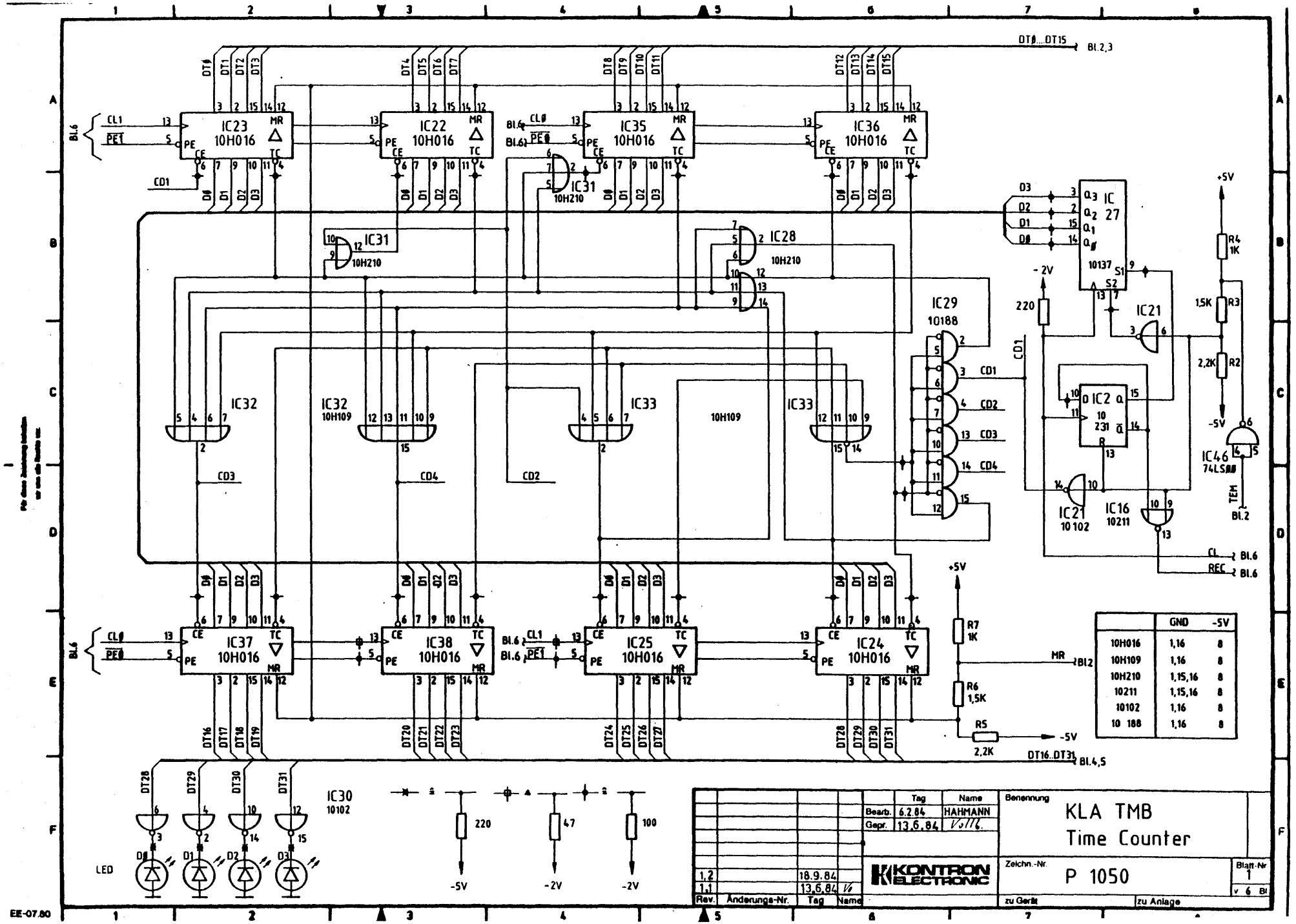

	GND	-5V
10H016	1,16	8
10H109	1,16	8
10H210	1,15,16	8
10211	1,15,16	8
10102	1,16	8
10 188	1,16	8

Rev.	Änderungs-Nr.	Tag	Name
1.2		18.9.84	
1.1		13.6.84	

	Tag	Name
Bearb.	6.2.84	HAHMANN
Gepr.	13.6.84	

KONTRON ELECTRONIC

Benennung: KLA TMB
Time Counter

Zeichn.-Nr.: P 1050

Blatt-Nr. 1 v 6 Bl

zu Gerät | zu Anlage

EE-07.80

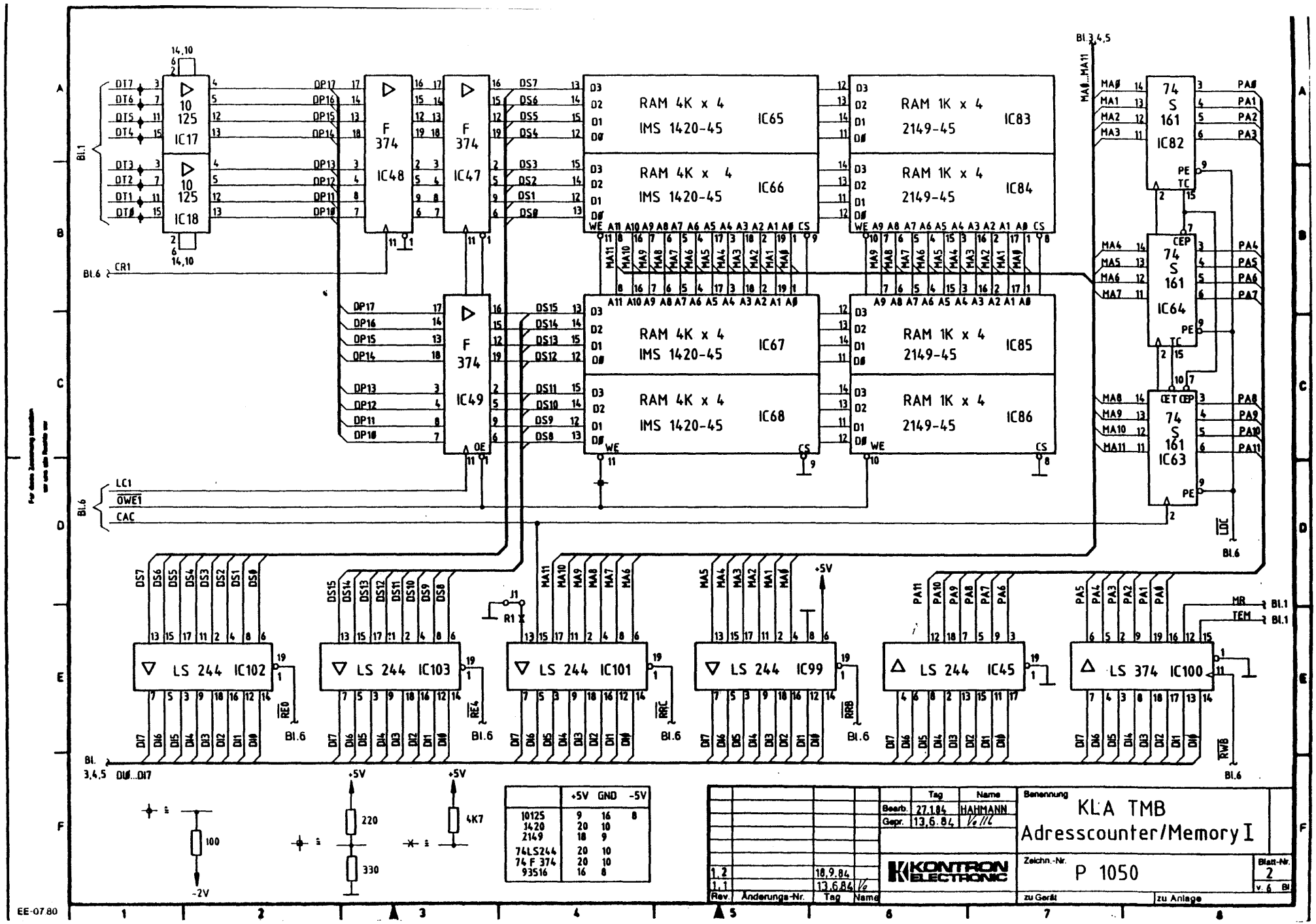
10125 IC17
10125 IC18
F 374 IC48
F 374 IC47
F 374 IC49
RAM 4K x 4 IMS 1420-45 IC65
RAM 4K x 4 IMS 1420-45 IC66
RAM 4K x 4 IMS 1420-45 IC67
RAM 4K x 4 IMS 1420-45 IC68
RAM 1K x 4 2149-45 IC83
RAM 1K x 4 2149-45 IC84
RAM 1K x 4 2149-45 IC85
RAM 1K x 4 2149-45 IC86
74 S 161 IC82
74 S 161 IC64
74 S 161 IC63
LS 244 IC102
LS 244 IC103
LS 244 IC101
LS 244 IC99
LS 244 IC45
LS 374 IC100
CR1
LC1
OWE1
CAC
LDC
MR
TEM
R1
+5V
-2V
100
220
330
4K7
+5V GND -5V
10125 9 16 8
1420 20 10
2149 18 9
74LS244 20 10
74 F 374 20 10
93516 16 8
Name Tag
Bearb. 27.1.84 HAHMANN
Gepr. 13.6.84
Benennung KL.A TMB
Adresscounter/Memory I
KONTRON ELECTRONIC
Zeichn.-Nr. P 1050
Blatt-Nr. 2
zu Gerät
zu Anlage
1.2 18.9.84
1.1 13.6.84
Rev. Änderungs-Nr. Tag Name
EE-0780

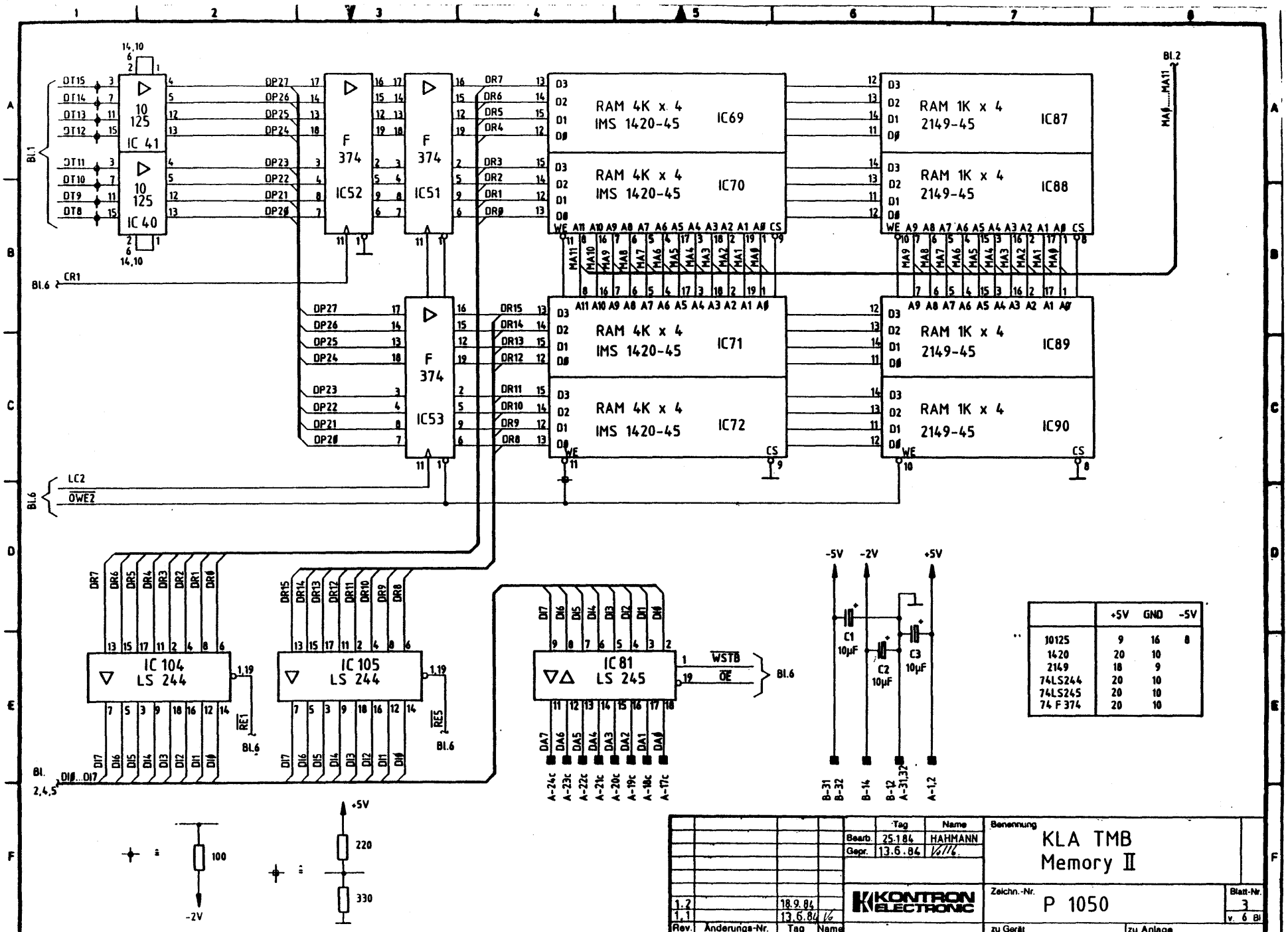

	+5V	GND	-5V
10125	9	16	8
1420	20	10	
2149	18	9	
74LS244	20	10	
74LS245	20	10	
74 F 374	20	10	

	Tag	Name
Bearb	25.1.84	HAHMANN
Gepr.	13.6.84	

Rev.	Änderungs-Nr.	Tag	Name
1.2		18.9.84	
1.1		13.6.84	

KONTRON ELECTRONIC

Benennung: KLA TMB Memory II

Zeichn.-Nr.: P 1050

Blatt-Nr.: 3 v. 6 Bl

zu Gerät | zu Anlage

EE-07 80

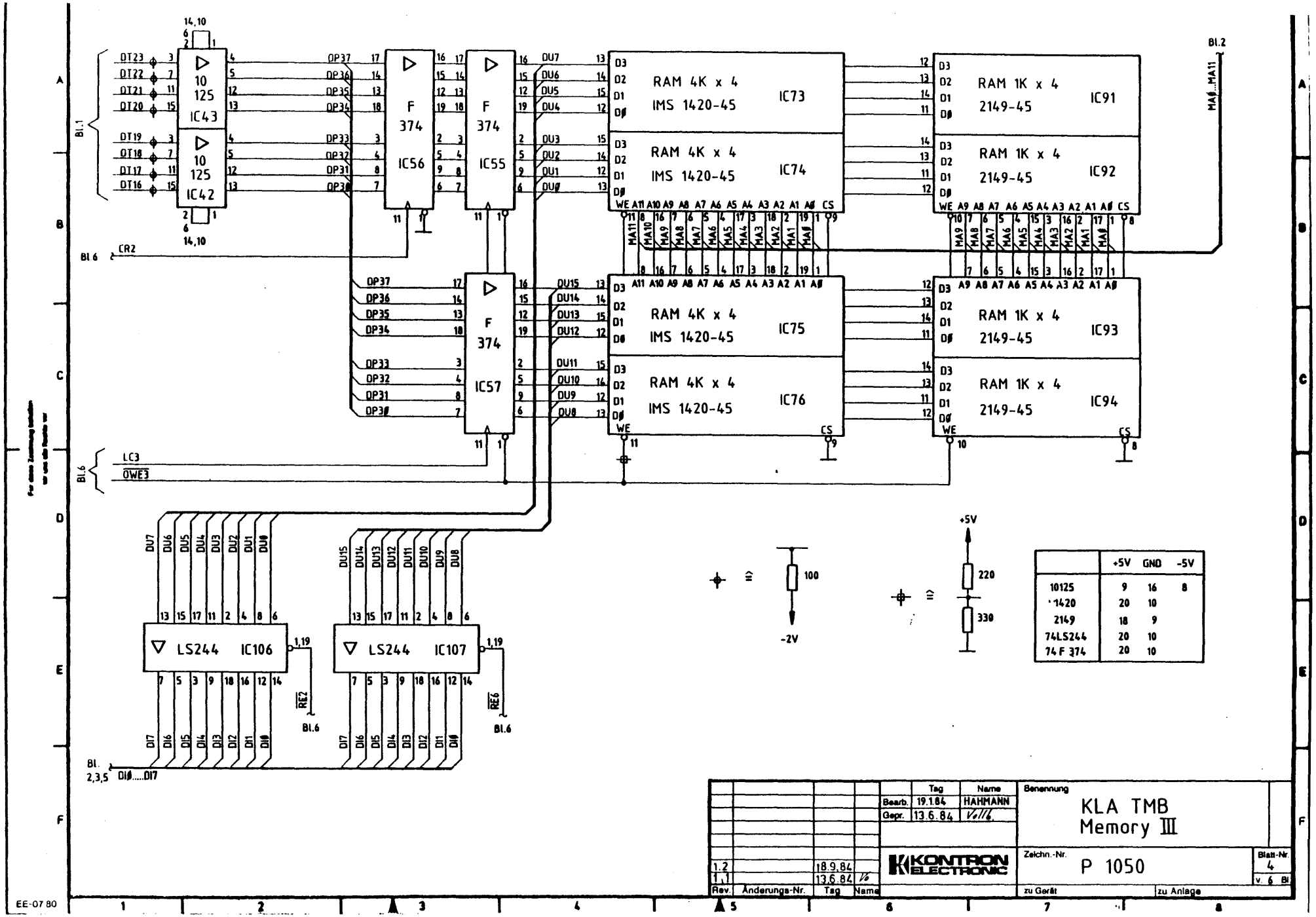

	+5V	GND	-5V
10125	9	16	8
1420	20	10	
2149	18	9	
74LS244	20	10	
74 F 374	20	10	

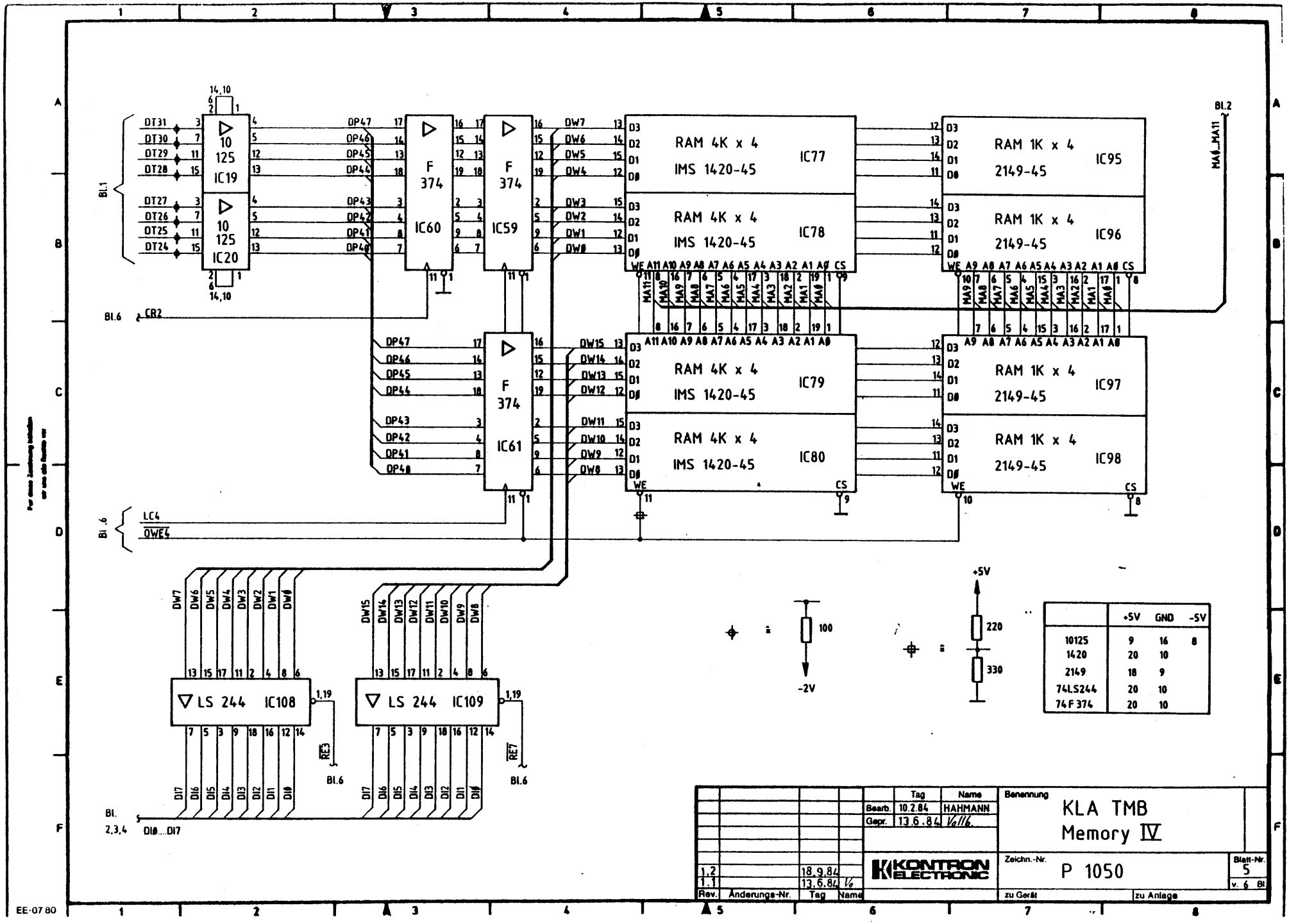

	+5V	GND	-5V
10125	9	16	8
1420	20	10	
2149	18	9	
74LS244	20	10	
74F 374	20	10	

Rev.	Änderungs-Nr.	Tag	Name
1.2		18.9.84	
1.1		13.6.84	

	Tag	Name
Bearb.	10.2.84	HAHMANN
Gepr.	13.6.84	

Benennung: KLA TMB Memory IV

KONTRON ELECTRONIC

Zeichn.-Nr.: P 1050

Blatt-Nr.: 5 v. 6 Bl.

zu Gerät | zu Anlage

EE-07 80

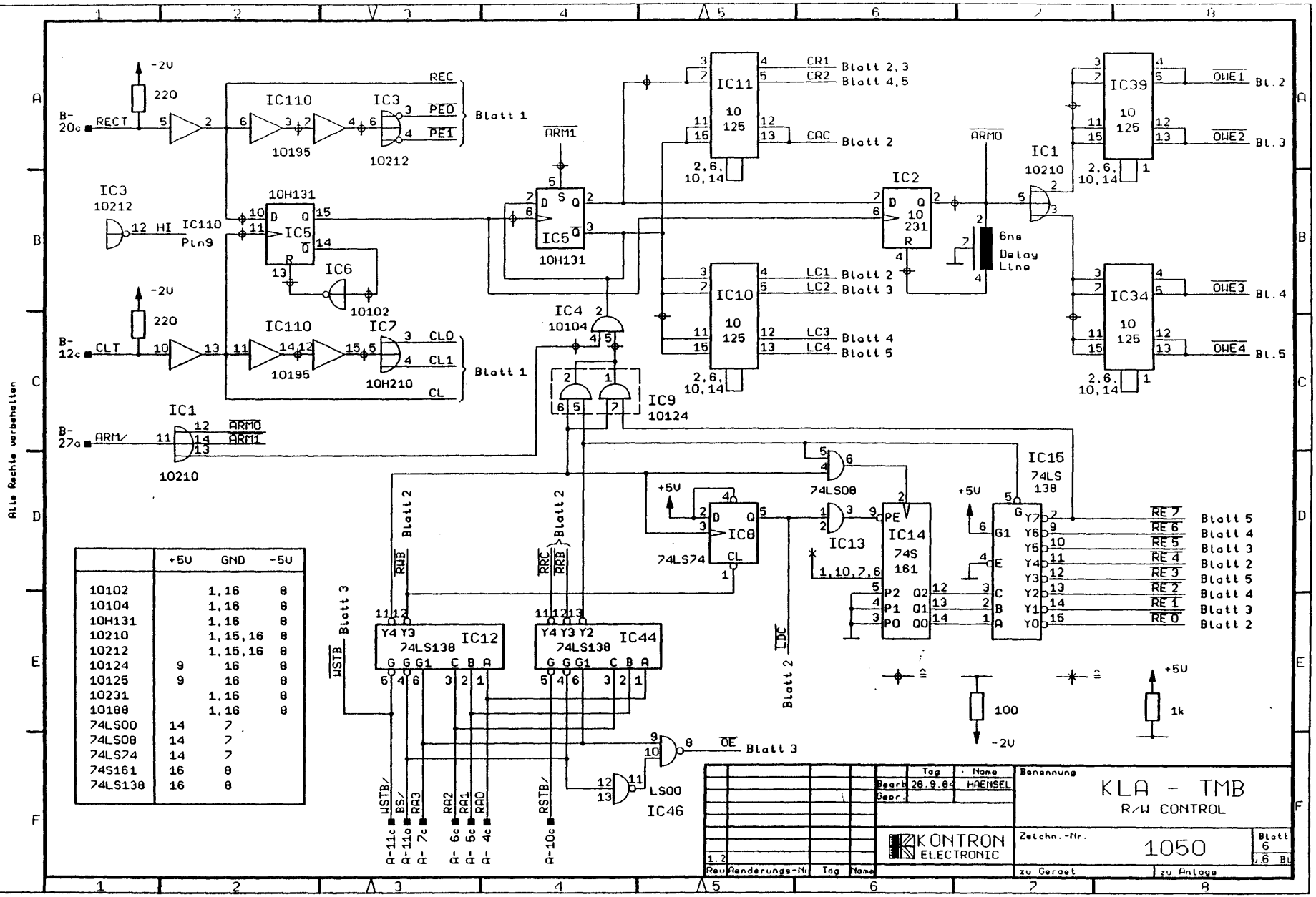

	+5V	GND	-5V
10102		1,16	8
10104		1,16	8
10H131		1,16	8
10210		1,15,16	8
10212		1,15,16	8
10124	9	16	8
10125	9	16	8
10231		1,16	8
10188		1,16	8
74LS00	14	7	
74LS08	14	7	
74LS74	14	7	
74S161	16	8	
74LS138	16	8	

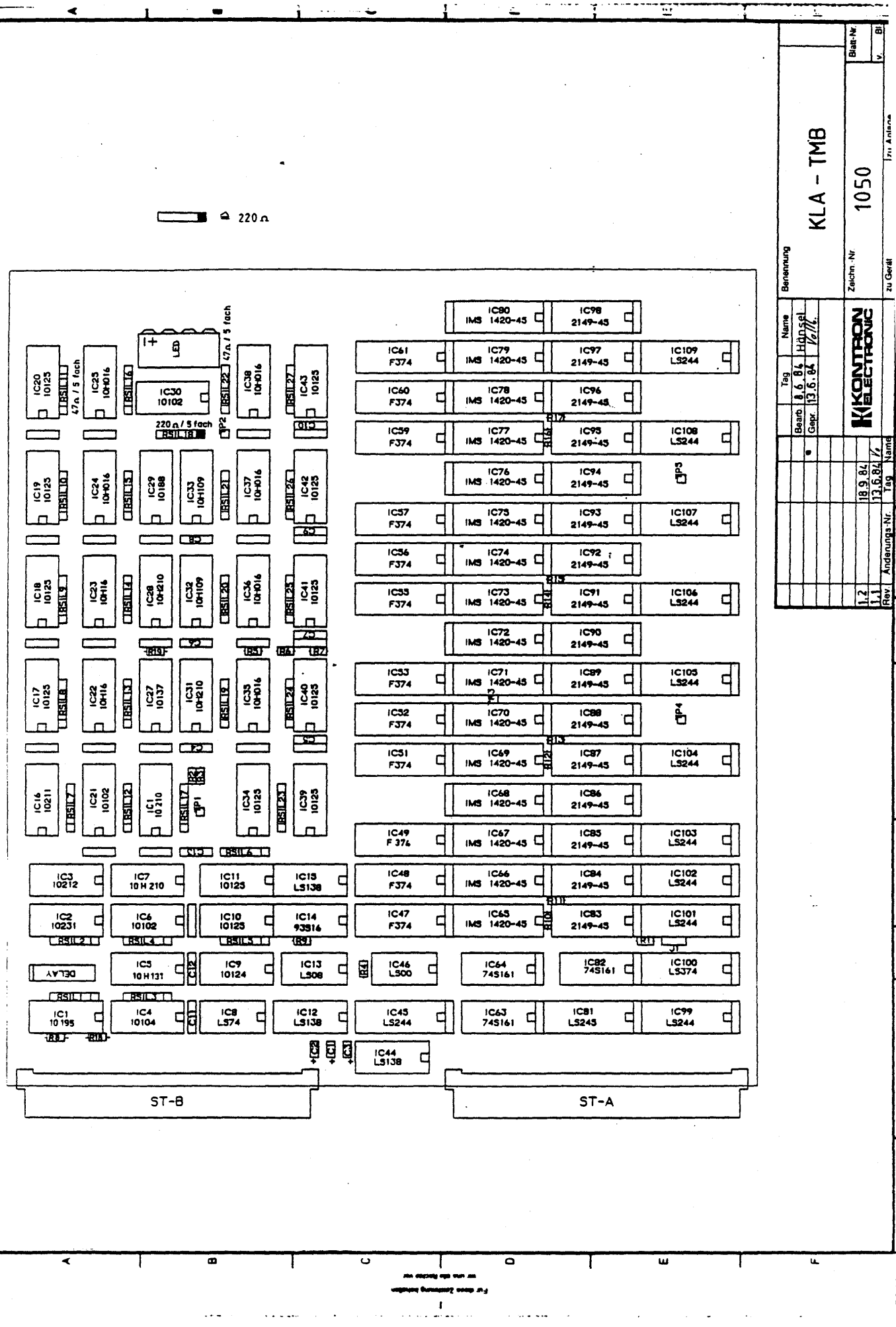
220 Ω
LED
IC30 10102
220 Ω / 5 fach
47 Ω / 5 fach
IC90 IMS 1420-45
IC98 2149-45
IC61 F374
IC79 IMS 1420-45
IC97 2149-45
IC109 LS244
IC60 F374
IC78 IMS 1420-45
IC96 2149-45
IC59 F374
IC77 IMS 1420-45
IC95 2149-45
IC108 LS244
IC76 IMS 1420-45
IC94 2149-45
IC57 F374
IC75 IMS 1420-45
IC93 2149-45
IC107 LS244
IC56 F374
IC74 IMS 1420-45
IC92 2149-45
IC55 F374
IC73 IMS 1420-45
IC91 2149-45
IC106 LS244
IC72 IMS 1420-45
IC90 2149-45
IC53 F374
IC71 IMS 1420-45
IC89 2149-45
IC105 LS244
IC52 F374
IC70 IMS 1420-45
IC88 2149-45
IC51 F374
IC69 IMS 1420-45
IC87 2149-45
IC104 LS244
IC68 IMS 1420-45
IC86 2149-45
IC49 F 374
IC67 IMS 1420-45
IC85 2149-45
IC103 LS244
IC48 F374
IC66 IMS 1420-45
IC84 2149-45
IC102 LS244
IC47 F374
IC65 IMS 1420-45
IC83 2149-45
IC101 LS244
IC82 74S161
IC100 LS374
IC46 LS00
IC64 74S161
IC45 LS244
IC63 74S161
IC81 LS245
IC99 LS244
IC44 LS138
IC1 10195
IC4 10104
IC8 LS74
IC12 LS138
IC5 10H131
IC9 10124
IC13 LS08
IC2 10231
IC6 10102
IC10 10125
IC14 93S16
IC3 10212
IC7 10H210
IC11 10125
IC15 LS138
IC16 10211
IC21 10102
IC1 10210
IC34 10125
IC39 10125
IC17 10125
IC22 10H16
IC27 10137
IC31 10H210
IC35 10H016
IC40 10125
IC18 10125
IC23 10H16
IC28 10H210
IC32 10H109
IC36 10H016
IC41 10125
IC19 10125
IC24 10H016
IC29 10188
IC33 10H109
IC37 10H016
IC42 10125
IC20 10125
IC25 10H016
IC30 10102
IC38 10H016
IC43 10125
ST-B
ST-A
KLA - TMB
KONTRON ELECTRONIC
Zeichn.-Nr 1050
Benennung
Name
Tag
Bearb. 18.6.84 Hänsel
Gepr. 13.6.84
18.9.84
13.6.84
Rev. Änderungs-Nr. Tag Name
Blatt-Nr.
zu Gerät
EE 0/30

APPENDIX A

DATA FILE FORMATS

The purpose of this appendix is to provide you with the information you need to be able to read and properly interpret the information contained in the LA data files.

Both the standalone (LA) and slave (KSA) versions of the Kontron Logic Analyzer use 5.25" diskettes for software transfer and long term storage of setup and data files. Data files stored on the diskettes may be read and redisplayed on an LA at any time. To analyze data on another computer (other than an LA), the following transfer methods may be used:

- Transfer all or part of a data file from the LA to the computer via an RS-232C link or an IEEE-488 interface. See Remote Control Interface (2310-5103).
- Transfer the LA system diskette to a compatible floppy disk unit in the host computer.

A.1 PHYSICAL STORAGE FORMAT

The physical specifications of the LA diskettes are as follows:

- 5.25 inch, double-sided, double-density
- 96 tracks per inch, 77 tracks per side
- 4K bytes per track
- 16 physical sectors per track
- 256 bytes per sector

For the following discussion, the tracks are numbered from 0 to 76 on side one of the diskette (0 is the outside track), and 77 to 153 on side two.

A.2 FILE STRUCTURE OF LA SOFTWARE

The LA system software uses CP/M file handling. The reference files use the same interleave factor (=3) as CP/M on Kontron systems.

To analyze LA data on systems that use different interleave factors, it may be necessary to translate logical to physical sectors to access the LA files. The information in Table A-1 is provided to assist in this effort. Table A-1 lists the sector translation for the first track (that is, the first 32 logical sectors) of a data file. For the 2nd, 3rd, and 4th track, the decimal number 32, 64, or 96, respectively, must be added to the logical sector numbers. As indicated in the last line, the decimal number 16, 32, or 48 must be added to the physical sector numbers.

Table A-1. Physical to Logical Sector Translation (Decimal)

Sequential CP/M File Access		Random CP/M File Access	
read CP/M sequential sectors	to access physical sector	to access physical sector	read CP/M random sectors
1, 2	1	1	1, 2
3, 4	4	2	23, 24
5, 6	7	3	13, 14
7, 8	10	4	3, 4
9, 10	13	5	25, 26
11, 12	16	6	15, 16
13, 14	3	7	5, 6
15, 16	6	8	27, 28
17, 18	9	9	17, 18
19, 20	12	10	7, 8
21, 22	15	11	29, 30
23, 24	2	12	19, 20
25, 26	5	13	9, 10
27, 28	8	14	31, 32
29, 30	11	15	21, 22
31, 32	14	16	11, 12
+ 32 * t	+ 16 * t	+ 16 * t	+ 32 * t
with t = 0,1,2,3 for track 1,2,3,4 of a given file			

A.3 REFERENCE FILES

A reference file is a set of up to three different CP/M files, which also have different filenames. These files are the reference data file, the reference setup file, and the reference time measurement data file. The reference time measurement data file is created only if the Time Measurement Board (TMB) is installed.

The following subsections give information on the file naming conventions and the file sizes of reference files in software versions 2.2x/3.2x and 2.1x/3.1x. LA software V2.2x and 3.2x use Virtual Memory Management (VMM).

A.3.1 VMM-BASED LA SOFTWARE V2.2x/3.2x

For LA software version 2.23/3.22 and later releases that use the File Manager Menu, the following filename extensions are used:

- filename.REF, reference data file

  file size = (n + g + 2 * i) * (length in use)

  n = number of active non-interlaced probes
  g = number of active GLITCH probes (series-III only)
  i = number of active interlaced probes
  length in use = displayed in Configuration Menu

- filename.RSE, reference setup file

  file size = 4K bytes

- filename.RTM, reference time measurement data file, if the Time Measurement Board (TMB) is inserted and TMB data storage is confirmed.

  file size = 6 * (length in use)
  length in use = displayed in Configuration Menu

Consider the following configuration: An LA48A with TMB option, with a user-selected memory depth of 2048 samples. The LA48A is in mixed operation, with probes 1 through 4 in Non-Interlace and probe 5 in Interlace operation. The executed actions are a successful measurement, and a SOURCE data storage with filename "TESTDATA". TMB data storage is confirmed by <YES>.

Then, the LA software generates the following files on the logged disk drive:

- TESTDATA.REF, file size = (4 + 2 * 1) * 2048 = 12K byte
- TESTDATA.RSE, file size = 4K byte
- TESTDATA.RTM, file size = 6 * 2048 = 12K byte

A.3.2 LA SOFTWARE V2.1x/3.1x

For LA software V3.18 and earlier releases that use the former Store/Recall Menu, the following filenames were used:

- REFDATxx.REF, reference data file

  file size = (n + g + 2 * i) * (length in use)

  xx = Store/Recall file number
  n = number of active non-interlaced probes
  g = number of active GLITCH probes (series-III only)
  i = number of active interlaced probes
  length in use = displayed in Configuration Menu

- RSETUPxx.RSE, reference setup file

  file size = 4K bytes

- REFTMDxx.RTM, reference time measurement data file, if the Time Measurement Board (TMB) is inserted.

  file size = 6 * (length in use)
  length in use = displayed in Configuration Menu

A.4 DATA FILE FORMAT

The internal arrangement of samples is sample-oriented. This aids in the handling of different (user-selectable) memory sizes and in the interpretation of data files.

The data is organized in n-byte wide sample words, where n is the number of software-actived probes. The sample words are stored in chronological order. Every bit in a sample byte represents one channel for each of the eight pins of the probe. The Least Significant Bit (LSB) represents pin 1; the Most Significant Bit (MSB) represents pin 8. The bits for each sample are set "in positive logic" as follows:

1 - denotes a high level
0 - denotes a low level

This structure is also used for data file transfer in the remote control option.

The internal structure of a sample word depends on the LA configuration.

A.4.1 NON-INTERLACE OPERATION

The sample word represents the data of a single sample from each of the active probes. Each byte represents a probe, ordered from probe 1 data in the lowest address to probe n in the highest address, where n (= 1..8) is the number of active probes. Within a byte, the bits represent the individual channels with probe pin 1 = LSB and pin 8 = MSB.

Example: LA64(A) with 8 active probes and 2K memory in use

```
Address  00 01 02 03 04 05 06 07   08 09 0A 0BH   ...  3FFC 3FFD 3FFE 3FFFH
Probe     1  2  3  4  5  6  7  8    1  2  3  4    ...     5    6    7    8
Sample   +-------- 1 --------+    +------ 2 --    ...  -- 2048 --------+
Word     +-------- 1 --------+    +------ 2 --    ...  -- 2048 --------+
```

A.4.2 INTERLACE OPERATION

Each sample word represents two samples for each of the active probes. The word is made up of i 2-byte groups, where i (= 1..4) is the number of active probes. The two bytes of a group represent two consecutive (interlaced) samples of one of the active probes. Starting at the low address, groups represent probes in the order 1, 3, 5, and 7.

Example: LA48(A) with 3 active probes and 2K (interlace-) memory in use

```
Address  00 01 02 03 04 05   06 07 08 09 0A 0BH   ...  2FFC 2FFD 2FFE 2FFFH
Probe     1  1  3  3  5  5    1  1  3  3  5  5    ...     3    3    5    5
Sample    1  2  1  2  1  2    3  4  3  4  3  4    ...  2047 2048 2047 2048
Word     +------- 1 -----+    +------ 2 -----+    ...  -- 1024 --------+
```

A.4.3 MIXED OPERATION (INTERLACE - NON-INTERLACE)

In this LA configuration, probes 1 through 4 are non-interlaced, and probes 5 and 7 are interlaced. Accordingly, the storage format is a mix within each sample word of the two formats above, using the first for probes 1 through 4, and the second format for probes 5 and 7.

Example 1: LA64(A) with 4 Non-Interlace + 2 Interlace probes (2K in use)

```
Address  00 01 02 03 04 05 06 07   08 09 0A 0B 0C 0D 0E 0F   10 11 12 13 14
Probe     1  2  3  4  5  5  7  7    1  2  3  4  5  5  7  7    1  2  3  4  5
Sample    1  1  1  1  1  2  1  2    2  2  2  2  3  4  3  4    3  3  3  3  5
Word     +---------- 1 ----------+  +---------- 2 ----------+  +---------- 3 --
```

Example 2: LA32(A) with 2 non-Interlace + 1 Interlace probes (1K in use)

```
Address  00 01 02 03   04 05 06 07   08 09 0A 0BH . .  0FFC 0FFD 0FFE 0FFFH
Probe     1  2  3  3    1  2  3  3    1  1  3  3  . .    1    2    3    3
Sample    1  1  1  2    2  2  3  4    3  3  5  6  . .  1024 1024 2047 2048
Word     +--- 1 ---+   +--- 2 ---+   +--- 3 ---+       +------ 1024 ------+
```

A.4.4 DIFFERENT GLITCH MODE SAMPLES

In hardware/software version 2, the GLITCH mode is probe-oriented and uses bits 0, 2, 4, and 6, corresponding to the active channels 1, 3, 5, and 7 to indicate the state (high or low) of the data channel. The neighboring bits 1, 3, 5, 7 hold a 1 if a GLITCH has been detected, and a 0 otherwise.

```
Pin #      07  06  05  04  03  02  01  00
Data bit   G3  D3  G2  D2  G1  D1  G0  D0
```

In hardware/software version 3, the GLITCH mode is board-oriented and uses probe n (1, 3, 5, or 7) to indicate the state (high or low) of the data channels. The corresponding bit position in probe n+1 has a 1 if a GLITCH has been detected, and a 0 otherwise.

```
Pin #     . . .  07 06 05 04 03 02 01 00   07 06 05 04 03 02 01 00   . . .
Data bit  . . .  D7 D6 D5 D4 D3 D2 D1 D0   G7 G6 G5 G4 G3 G2 G1 G0   . . .
Address   . . .  +---------- n ----------+  +---------- n+1 ----------+
Sample    +------------------------------ 1 ------------------------------+  +---
```

A.5 SETUP FILE FORMAT

The setup file contains the significant parameters of the different LA menus.

To interpret data files, the following parameters in the first sector of the setup file are of interest to the user.

The example below uses an LA48 with TMB in mixed operation. The DMB's have a memory size of 2k samples, and the user-selected memory size is 1024 samples. The trigger position is set to 255 pre-trigger samples in the non-interlaced LA memory. Probes 1 through 4 are non-interlaced and use an external clock. Probe 5 is interlaced.

Table A-2. Variable Definitions

Address	Data	Type of variable
0000H	defb 2	LA hardware/software revision number (= 2 or 3)
0001H	defb 0	Current setup file version number
0002H	defb 03FH	Data file compression mask (probe-oriented)
...	...	(variable updated until x.16, else use <0942H>)
...	...	
000FH	defw 0400H	USER selected memory size + 1 (= length in use)
...	...	
...	...	
0031H	defw 04FFH	ABSOLUTE top adjusted TRIGGER address
...	...	
...	...	
0040H	defb 0F0H	Interlace/Non-Interlace mode (group-oriented)
...	...	0 = Non-Int, FFH = Interlace, 0F0H = mixed mode
0042H	defb 0	USER selected GLITCH probes (probe-oriented)
...	...	
...	...	
...	...	
0941H	defb 0	GLITCH mode (GLITCH = 1) (probe-oriented)
0942H	defb 1FH	Software active probes (probe-oriented)

All probe-oriented BYTE parameters use the LSB for probe 1, and the MSB for probe 8. All WORD parameters are stored LSB first.

The relative sample number is the difference between the actual absolute sample number and the contents of <0031H>:

relative sample number = (actual sample address) - <0031H>

The number of data bytes stored for one sample word is mode dependent.

A.5.1 NON-INTERLACE OPERATION

If the contents of address <40H> = 0, the LA is in Non-Interlace operation.

A.5.1.1 All Probes in STD Mode

If the contents of <0941H> is zero, then all probes are in STD mode. Each bit of <0002H> and <0942H> is mapped to the corresponding probe byte in the reference data file. The number of bytes per sample is the number of bits set to 1 in <0002H> and/or <0942H>.

A.5.1.2 Active GLITCH Probe(s)

If <00H> = 2, then the number of bytes used is the same as in STD mode. The bits set in the byte at address offset <0941H> should be used to interpret the GLITCH probe data bytes.

If <00H> = 3, then the number of bytes per sample is the number of bits set in <0002H> and/or <0942H>. For one active GLITCH probe, two consecutive bits are set to 1 in <0941H>. This information can be used to interpret the data and GLITCH byte as described in section A.4.4.

A.5.2 INTERLACE OPERATION

If the contents of address <40H> = 0FFH, the LA is in Interlace operation. The GLITCH variable at address 0941H is always zero. Each bit of <0942H> is mapped to the corresponding active Interlace probe in the Configuration Menu. The number of bytes per sample is twice the number of bits set to 1 in <0942H>. The number of bits set in <0002H> is the number of bytes per sample.

A.5.3 MIXED OPERATION (INTERLACE - NON-INTERLACE)

If the contents of address <40H> = 0F0H, the LA is in mixed operation. Each bit of <0942H> is mapped to an active probe in the Configuration Menu. The number of bytes per sample is the number of bits set to 1 in <0002H>. If a non-interlaced probe is also in the GLITCH-capturing mode, then use the description in section A.4.4 to decode this information.

A.6 TIME MEASUREMENT FILE FORMAT

Time measurement data is stored as absolute, chronologically ordered time values with 6 bytes per sample. Two's complement values are stored LSB first, 1 bit corresponding to 1 ns. The relative time is the difference between consecutive absolute time values.

```
Address   00 01 02 03 04 05H    06 07 08 09 0A 0BH   0C 0D 0E 0F 10 11H  ..
Byte     LSB ......... . MSB  LSB ........... MSB  LSB ........... MSB  ..
Sample   +------- 1 -------+   +------- 2 -------+  +------- 3 -------+
```

A.7 SAMPLE SETUP AND REFERENCE FILE DUMP

The reference data and setup file in this example are from an LA48 with 4 active probes in non-interlaced operation (<0002H>= <0942H>=0FH). The user-selected memory length is 2048 samples. The trigger is set to 255 pre-trigger samples (<0033H>=00FFH).

Significant parts of the setup file:

```
0000 02 00 0F 00 08 00 08 00 08 00 00 00 00 00 08 00 *................*
0010 08 00 08 02 00 02 00 02 00 02 08 02 08 FF 07 FF *................*
0020 07 FF 07 FF 07 FF 07 00 08 00 08 00 08 00 00 00 *................*
0030 00 FF 00 02 00 FF 00 FF 00 07 00 00 0F 01 07 FF *................*
0040 00 CF 00 00 00 00 02 00 00 00 00 00 00 00 01 01 *................*
 ... .. .. .. .. .. .. .. .. .. .. .. .. .. .. .. .. *................*
 ... .. .. .. .. .. .. .. .. .. .. .. .. .. .. .. .. *................*
 ... .. .. .. .. .. .. .. .. .. .. .. .. .. .. .. .. *................*

0930 7F 00 00 00 00 00 00 00 00 00 00 00 00 3F 00 FF *.............?..*
0940 00 00 0F 3F 08 00 04 00 00 00 01 02 00 02 00 02 *...?............*
 ... .. .. .. .. .. .. .. .. .. .. .. .. .. .. .. .. *................*
```

Reference data file:

The reference data file structure is 4 bytes per sample word. The sampled data is from an RCA CDP1802 microprocessor software analysis. The probes are ordered in the following manner:

Probe 1 - lower address byte
Probe 2 - higher address byte
Probe 3 - 8 bit data bus byte
Probe 4 - 8 bit status byte

```
0000 03 F0 03 7F 92 1B 3A 2F 99 1B 2D 6F 99 1B 2D 2F *......:/..-o..-/*
0010 28 F0 7F 7F 9A 1B 8D 2F 27 F0 27 7F 9B 1B 3A 2F *(...../'.'...:/*
0020 9C 1B 97 6F 97 1B C4 2F 98 1B C4 6F 98 1B C4 6F *...o.../...o...o*
0030 98 1B C4 2F 99 1B 2D 6F 99 1B 2D 6F 99 1B 2D 2F *.../..-o..-o..-/*
0040 27 F0 7F 7F 9A 1B 8D 2F 26 F0 26 7F 9B 1B 3A 2F *'...../&.&...:/*
0050 9C 1B 97 6F 97 1B C4 2F 98 1B C4 6F 98 1B C4 6F *...o.../...o...o*
0060 98 1B C4 2F 99 1B 2D 6F 99 1B 2D 6F 99 1B 2D 2F *.../..-o..-o..-/*
0070 26 F0 7F 7F 9A 1B 8D 2F 25 F0 25 7F 9B 1B 3A 2F *&...../%.%...:/*
0080 9C 1B 97 6F 97 1B C4 2F 98 1B C4 6F 98 1B C4 6F *...o.../...o...o*
0090 98 1B C4 2F 99 1B 2D 6F 99 1B 2D 6F 99 1B 2D 2F *.../..-o..-o..-/*
00A0 25 F0 7F 7F 9A 1B 8D 2F 24 F0 24 7F 9B 1B 3A 2F *%...../$.$...:/*
00B0 9C 1B 97 6F 97 1B C4 2F 98 1B C4 6F 98 1B C4 6F *...o.../...o...o*
00C0 98 1B C4 2F 99 1B 2D 6F 99 1B 2D 6F 99 1B 2D 2F *.../..-o..-o..-/*
00D0 24 F0 7F 7F 9A 1B 8D 2F 23 F0 23 7F 9B 1B 3A 2F *$...../#.#...:/*
00E0 9C 1B 97 6F 97 1B C4 2F 98 1B C4 6F 98 1B C4 6F *...o.../...o...o*
00F0 98 1B C4 2F 99 1B 2D 6F 99 1B 2D 6F 99 1B 2D 2F *.../..-o..-o..-/*
 ... .. .. .. .. .. .. .. .. .. .. .. .. .. .. .. .. *................*
 ... .. .. .. .. .. .. .. .. .. .. .. .. .. .. .. .. *................*
```

APPENDIX B

SERIES III LOGIC ANALYZER SPECIFICATIONS

B.1 PHYSICAL DESCRIPTION

Dimensions

Logic analyzer dimensions are as follows:

Width	Height	Depth	Weight
19 in. 45 cm	8 in. 21 cm	23.2 in. 58 cm	64 lb. (nominal) 29 kg

CRT

The CRT measures 9 inches diagonally. Resolution is 400 pixels across 24 or 26 lines.

Power

400va

Drives

Two 5.25 inch floppy disk drives.
5.25 inch double density, double sided diskettes.
96 TPI 77 tracks.
Capacity 560K.

B.2 INTERFACE PORTS

Printer Interface Port

RS-232C or Centronics-compatible printer port.
Single keystroke for screen hardcopy with graphics and text.
Capable of Full memory dump.

Remote Interface Ports

RS-232C Serial Interface Port:

Baud rates:	110 to 9600
Bits/Symbol:	5, 6, 7 or 8
Stop Bits:	1, 1.5 or 2
Parity:	Even, odd, none

Full Duplex/Half Duplex
Computer/Terminal communication
Screen hardcopy

Trigger output - TTL (BNC connector)
Trigger level output - ECL (10-pin connector)
Video output - Composite Video 75 ohm 1Vp-p

IEEE-488 (GPIB) Parallel Interface Port:

Requires addition of optional firmware. See B.12.6 for description of features).

B.3 INPUTS

Signal Inputs:	8 channels per probe, pins 0-7 plus ground. 1 or 2 clock probes, each with 2 clocks, pins 0 and 1. Clock qualifiers pins 2 to 7.
Input Impedance:	1 MOhm, <5pF.
Input Voltage:	Maximum +50V continuous, +100V briefly.
Thresholds:	TTL (+1.4V), ECL (-1.3V), 4 variable thresholds (0...± 12.7V, in steps of 100mV), separately selectable for each probe.
Setup Time:	Data must be present at least 2ns before active clock edge.
Hold Time:	Data must be present at least 2ns after active clock edge.
Skew:	2ns channel to channel.

B.4 MEMORY AND SAMPLE RATES

Table B-1 below describes the standard memory and sample rates.

Table B-1. Standard Memory and Sample Rates

Model:		LA32A	LA48A	LA64A
Maximum Channels	- Non-Interlace	32	48	64
Maximum Channels	- Interlace	16	24	32
Maximum Sample Rate	- Non-Interlace	20ns	20ns	20ns
Maximum Sample Rate	- Interlace	10ns	10ns	10ns
Minimum Memory Depth	- Non-Interlace	2K	2K	2K
Maximum Memory Depth	- Interlace	16K	16K	16K

See B.12.3 for memory and sample rates with the 500 MHz High Speed option installed.

B.5 RECORD MODE SAMPLE RATES

Table B-2 following shows sample rates for recording modes:

Table B-2. Record Mode Sample Rates

Record Mode	Sample Rate
High-Speed	2, 5, 10ns (2ns glitch)
Interlaced	10ns
Normal	20ns to 500ms
Transitional	40ns min. detectable pulse width, with 20ns resolution
Data Qualified	40ns
Normal	20ns
Level Selected	20ns
Transitional	40ns
Glitch: Detect glitch on one channel or one of several. Glitch word ANDed with Data word	Captures 5ns glitches 20ns sampling 20ns Sampling

B.6 GLITCH AND REFERENCE MEMORY

Glitch Memory - Glitches are stored in a separate memory space. Space is relinquished by data channels. Glitches are displayed as:

- Half height spikes on data channels
- Positive pulses on glitch channels in timing displays.

Reference Memory - Memory capacity and organization identical to source memory. Can be loaded with data from a reference recording or from diskette or interface.

B.7 EXTERNAL CLOCKING

Combination - Four clocks (J0, J1, K0, K1) rising, falling or both edges ORed.

Clock Qualifiers - Twelve qualifiers inputs, groups of six associated with J & K clocks. Each group ANDed into 6-bit qualifier words. Up to six qualifier words ORed. Expandable to twelve ORed qualifier words.

B.8 RECORDING ARM MODES

Manual	One recording made when run key is pressed.
Auto Repeat (Selected in Trigger Sequence Menu)	Continuous, successive recording, interval between recording user-selectable.
Auto Stop (Selected in Compare Menu)	Record until source is equal, or not equal, to reference recording. Miscompares may be automatically stored on disk, or just counted.

B.9 SETUP SCREENS

The LA features three Standard Menus for setup, and three Special Menus for post-recording data manipulation.

Standard Menus:

- Configuration Menu
- Trigger Words Menu
- Trigger Sequence Menu

Special Menus:

- File Manager Menu
- Compare Menu
- I/O Menu

Configuration Menu

- clock qualifiers
- record modes
- clock definitions
- threshold voltages
- trigger position in memory
- memory size
- glitch mode enable
- sample rate up to 100 MHz

File Manager Menu

- store setups, recordings, and CP/M programs on disk.
- load disassemblers
- user-defined file names
- store Timing Diagrams and Data Lists

Trigger Words Menu

- channel groups
- "word" mnemonics
- word definitions
- as many as 32 trigger words
- hex, decimal, octal or binary input

Compare Menu

- select jitter setting
- define compare segments
- simultaneous compare of two segments
- select compare function, halt, or count if source equal or not equal to reference (babysitting mode)

Trigger Sequence Menu

- auto repeat
- trigger filter
- recording mode
- as many as 14 instruction levels
- trigger search monitor

I/O Menu

- remote control parameters
- printer interface parameters
- test string enable
- screen to printer dump
- Timing Diagram and Data List printouts

See B.11 for additional information about triggering.

B.10 DISPLAY SCREENS

There are two standard display screens: the Timing Diagram and the Data List.

The Timing Diagram includes the following features and capabilities:

- Eight or sixteen channels displayed
- 64 to 2048 samples displayed
- Four character labeling + two digits defining probe/pin
- Resequence in any order
- Labels follow channels when resequenced
- Two user-controlled markers: "S" and "C"
- "S" determines memory segment to be viewed
- "T" marks trigger
- Time measured or calculated ("S" to "C","S" to "T", "T" to "C" displayed)
- Glitches can be displayed as half-height spikes and on separate timing traces
- Transfer source to reference memory
- Display source, reference, and differences
- State list for data values at "T", "S" AND "C"
- Search for words, glitches, miscompares or transitions

The Data List offers the following features and capabilities:

- Two markers "S" and "C"
- "S" determines first memory location on display
- "T" marks trigger location
- Time measured or calculated, "S" to "C", "S" to "T", or "T" to "C"
- Time column (with Time Measurement option) time or clocks relative to prior sample or trigger sample
- Memory locations between "S", "T" and "C" always displayed in hex and decimal
- Transfer source to reference memory
- Display, source, reference and differences (high-lighted in reverse video)
- Cursors may jump, scroll or move one page at a time
- Columns displayable in different radices (binary, hex, octal, decimal, ASCII or EBCDIC)
- Search for as many as sixteen words in sequence

B.11 TRIGGERING

Trigger Words

As many as 32 user-defined trigger words using up to five characters. Bits are defined across all inputs.

Each word may be associated with any of four clocks (one internal and three external clocks or four external clocks).

Words may be stored with setups on disk storage.

Radices include binary, hexadecimal, octal, and decimal.

Trigger Sequences

Levels	Up to 14 levels, dependent on utility usage on each level.
Instructions (two per level)	Trigger, Reset (go to <1>), Go to <level>.
Conditions (two per level maximum)	Word Counter, Edge Detectors, Trigger Filter, Delay Counter, Level Detectors, Time Windows, Word Recognizers.
Conjunctions (one per level)	IF THEN / BUT IF
Trace (one per level)	One word, two words, all samples on/off.

B.12 OPTIONS

The LA can include the following options:

- Performance Analysis with Time Measurement (see B.12.1)
- Disassemblers (see B.12.2)
- 500 MHz High Speed Board (see B.12.3)
- Multiclock Probe (see B.12.4)
- Serial Data Probe (see B.12.5)
- IEEE 488 Bus Interface - REMCON (see B.12.6)

B.12.1 PERFORMANCE ANALYSIS

Time per module histogram:

- Ten user-defined time ranges
- Module defined by entry and exit word
- Bar graph (%) displayed
- Numerical values
- One recording or several
- Total minimum and maximum time

Module usage histogram:

- Eight user-defined modules
- Module defined by entry and exit words
- Bar graph % of total time in module or relative to other modules
- Numerical display of number of module occurrences
- One recording or several recordings

B.12.2 DISASSEMBLERS

Disassemblers are available for most 8-bit and 16-bit microprocessors (Z8002, 68000, 8086, 8088, Z80, 8085, 6800, 6802, 6803, 6804, 6808, 8080, 6809, 6809E, 1802, NSC800, 6502, GPIB, 8048, 8051, 80186, 80188, and others, and user-defined probing scheme).

The features of the disassemblers are:

- Allow selection of type of CPU activities to be recorded (ALL, OPCODES, DATA, I/O, WRITE, READ, or READ/WRITE).
- "D" marker (like "C") can move to start of each bus cycle, and be used for distance measurements like the "C" marker.
- Measure absolute time from one instruction to another (with Time Measurement board).
- Scroll by line or page.

B.12.3 500MHz HIGH SPEED BOARD

Common Trigger

- Simultaneous trigger of high speed and low speed channels
- Pre- and post-trigger memory, individually selectable
- A combination of high speed and low speed trigger words can be used to define trigger criteria
- Ninth channel high speed records low speed external clock for time correlation

Local Trigger

- Trigger criteria independently selectable
- Pre- and post-trigger memory, individually selectable
- Event words found on low speed board can be used as trigger criteria for the high speed board
- Ninth channel high speed records high speed trigger point within low speed memory

Differential probes for the 500 MHz board have the following specifications:

- 2ns sample rate
- Single-ended differential inputs
- CMR = 15V
- Skew = < 0.5ns channel to channel
- Impedance = 1MOhm/1.5pF
- 2ns minimum detectable pulse width

B.12.4 MULTICLOCK PROBE

Boolean combinations of as many as 8 external clock inputs, output to all four combination clocks (J0, J1, K0, K1).

B.12.5 SERIAL DATA PROBE

- RS232C/422 Transmission interface
- Selectable protocol parameters (Baud rate, synchronous, asynchronous, data bits, etc.)
- Active and passive modes

B.12.6 IEEE 488 GPIB INTERFACE (REMCON)

- Talker/listener modes
- Full operation control
- Macro commands
- Keystroke simulation
- E.O.I. selection
- Store data/recall setups on disk

INDEX

A bus	7-3
accessing menus	2-1
adding/removing columns in the data list	5-17
adding/removing Trigger Sequence steps	4-25
address boundaries for Compare segments	6-13
alphanumeric entry	2-3
alphanumeric keys	2-8
analysis of LA data files	A-1
and/or compare conditions	6-15
ARM modes	B-5
arrangement, Data List	5-15
arrangements, in Configuration menu	4-4
as-delivered standard parts	1-3
ASCII data	5-19
assigning channel groups	4-11
auto-repeat mode	4-18
B bus	7-3
babysitting mode (Compare menu)	6-11
back panel, illustration	1-5
backing up delivered disks	3-2
backup procedure for disks	3-3
bar, trigger location	4-8
bit resolution, Timing Diagram	5-6
block diagram (illustration)	7-2
boot procedure	3-4
built-in keypad, description	2-5
bus, LA	1-8
C-marker in the Data List	5-20
C-marker in Timing Diagram	5-7
changing file status with File Manager	6-8
changing switches to enable serial printer	6-19
channel arrangement	2-11
channel groups	2-13
channel groups for comparison	6-13
channel value word, searching for	5-12
channels in Timing Diagram	5-4
circuit boards within the LA	1-7
circuit diagrams	Chapter 8
clock assignment	2-12
clock indicator in Timing Diagram	5-5

clock probe signals 7-5
clock probe, self-test 3-8
clock selection in Configuration menu 4-4
clock-enable qualifiers 4-5
clocks, data qualified recording 4-21
clocks, internal 7-3
closed time windows 4-28
columns in the Data List 5-17
compare false, search for 5-26
Compare menu 6-11
Compare menu, introduction 2-17
comparing source-reference in Data List 5-23
comparing source-reference, Timing Diagram 5-11
condition bits, on SEQ board 7-9
conditions, Trigger Sequence 4-15
conditions, Trigger Sequence instructions 4-23
Configuration menu fields 4-1
Configuration menu for self-test 3-7
Configuration menu, introduction 2-11
connectors 1-4
connectors, probe 1-6
control, recording 7-12
controlling the clock from Timing Diagram 5-13
controlling the Data List display 5-17
controlling the timing display 5-7
copying disks 3-2
count after compare 6-15
counter, on SEQ board 7-10
counter, time on TMB 7-17
counting occurrences in Trigger Sequence 4-27
CPU board for the LA 1-8
cursor keys 2-4
custom cable for probe connection 1-6

data equal/not equal for comparison 6-15
data file format A-4
data file key parameters A-7
data files on disk 6-4
data input to DMB 7-6
Data List for self-test 3-8
Data List, introduction 2-16
data manipulation after recording 2-17
data probes, internals 7-17
data qualified recording mode 4-20
data reduction with clock qualifier words 4-6
data reduction with transition recording 4-22
defective disks 3-3
delay, per instruction level 4-29
delay, trigger 7-14
description, physical B-1

detecting glitches 7-7
detecting transitions 7-7
diagnostic checks, automatic 3-4
disabling printer output 6-18
disassembler option 7-18
disassemblers, directory 6-3
disassemblers, features B-10
disk drives, illustration 3-1
disks, physical specifications A-1
displaying recorded data 2-15
displays (Timing, List) 2-2
displays, features B-7
distances between markers in Data List 5-21
distances between markers, Timing Diagram 5-8
DMB (data memory board) 7-5
DMB boards, location 1-7
don't care key 2-8

EBCDIC data 5-19
edge triggering 4-26
errors reported via the File Manager 6-9
event words 4-25
event/trigger word search, Data List 5-25
examination of a recording 2-2
examining recorded data as waveforms 5-1
examining state data 5-15
executing a program 6-5, 6-7
execution, keys controlling 2-9
external clocks, connection with TBQ 7-4

F1 key 2-10
features, summary 1-1
fields in the File Manager 6-2
fields in the Compare menu 6-12
fields in the Data List 5-16
fields in the Timing Diagram 5-3
fields, changing values in 2-3
fields, Trigger Sequence menu 4-18
File Manager, introduction 2-17
file names and sizes A-3
file naming conventions 6-8
file structures A-2
filter, trigger 4-18
first menu (Configuration) 4-1
format/copy program 3-2
function keys 2-10
functional block diagram (illustration) 1-9
functional description, LA hardware 7-1
functions available from File Manager 6-1

glitch data in the Data List 5-19
glitch mode 7-7
glitch mode, effect on Trigger Words menu 4-11
glitch operating mode (GLTCH) 4-3
glitch recording, activation 2-12
glitch storage formats A-6
glitch, triggering on 4-16
glitches, in Timing Diagram 5-6
GLTCH event word, Trigger Sequence 4-30
GOTO instruction 4-29
graphic hard-copy output 6-20

halt after compare 6-15
hardware analysis with Timing Diagram 5-1
HELP key 2-7
hiding glitches in Timing Diagram 5-6
High Speed option, features B-10
horizontal resolution, Timing Diagram 5-5

I/O board for the LA 1-8
I/O menu 6-16
I/O menu, introdcution 2-17
if ... then logic for Trigger Sequence 4-29
incoming checklist, parts 1-3
input specifications B-2
instruction level conditions 4-24
instruction levels 2-14
instruction levels, monitoring 4-33
instruction levels, Trigger Sequence menu 4-14, 4-22
instruction, Trigger Sequence 4-15
instructions for Compare menu 6-15
interlace field, Configuration menu 4-3
interlace mode, internal clocks 7-4
intermittent errors, diagnosing 6-11
internal clock rate 4-6
interrupting a recording 4-32

jitter for comparisons 6-14
jumping to home location, Data List 5-21
jumping to home location, Timing Diagram 5-9

keys, LA front panel 2-5

leads, connecting to target 1-6
length of memory, in Configuration menu 4-7
level counter 7-10
lists of files 6-1
LOCAL/REMOTE control choice 6-17
location of trigger within memory 4-8
location, searching in Data List 5-25
logical groups of channels 4-11
long listing 6-20

major cursors 2-4
markers in the Timing Diagram 5-7
master clock for LA internals 7-3
master clock in Trigger Words menu 4-13
master clock, Trigger Sequence menu 4-17
master clocks 4-5
measure time/count clocks (with TM option) 4-21
memory and sample rates B-3
memory control from Data List 5-22
memory control from Timing Diagram 5-10
memory depth and speed, interlace mode 4-3
memory depth, setting 2-12
memory on DMB 7-8
memory on TMB 7-17
memory size, specifying 4-7
menu and display keys 2-6
menus, Special 2-2
menus, Standard 2-1
menus, description 2-1
menus, features B-6
messages in the File Manager 6-9
"mini Data List" in Timing Diagram 5-8
minor cursors 2-4
mnemonics, user-defined 2-4
modes, TMB 7-15
modes, checked by record module 7-13
motherboard, LA 7-1
MSB for channel groups 4-12

names for event words, channels 2-4
non-event, triggering on 4-16
normal recording mode 4-20
number of instruction levels 4-24

occurrence counter 4-27
occurrence counter, internal use 7-10
open time windows 4-28
operating modes for each probe 4-3
operating procedure, general 2-11
options, described B-9
ORed clocks, effect on Trigger Words menu 4-11
orientation bar, Timing Diagram 5-10
orientation markers in the Data List 5-20
output, trigger level Chapter 8
outputs from SEQ board 7-15
overview 1-1

paging through Data List 5-22
parallel printer 6-18
parallel printer port Chapter 8

parameters, user-controlled 2-3
performance analysis, features B-9
pin assignments, serial and parallel port Chapter 8
polarity in the Data List 5-18
polarity, channel group 4-12
ports and external connections 1-5
ports, description B-2
post-trigger memory, specifying size 4-8
power-up procedure 3-1
pre-trigger memory, specifying 4-8
printer cable, sample Chapter 8
printer characteristics, specifying 6-18
printer types, supported 6-20
printing the screen 6-20
probe rack option 7-18
probes and groups for self-test 3-8
probes, testing 3-6
program files, directory 6-3

qualifier words, clock 4-5
qualifiers, external clock 7-5

radix field in Trigger Words menu 4-12
radix in the Data List 5-19
RAM, trigger level 7-12
raster points, Timing Diagram 5-6
rates, sample 4-6
rearranging/renaming Timing channels 5-4
recalling a setup 6-5, 6-7
recalling data 6-5, 6-7
recording modes 2-14
recording modes and sample rates B-4
recording modes, internal use of 7-13
recording, acceptance of data 7-7
reference data file, sample A-10
reference equals/not equals source, search 5-13, 5-26
reference file format A-3
reference memory 2-16
reference memory from Data List 5-23
registers, internal 7-19
remote serial parameters 6-17
RESET key 2-6
RESTART instruction 4-29

S-marker in the Data List 5-20
S-marker in Timing Diagram 5-7
sample file, dump A-9
samples, internal storage A-5
sampling data via conditional RAM 7-6
schematics Chapter 8
screen control keys 2-7

screen mode	2-15
scrolling the Data List	5-21
scrolling the Timing Diagram	5-8
search capabilities	2-16
search function, Data List	5-24
search function, Timing Diagram	5-12
sectors, LA files	A-2
segments for comparison	6-13
segments of data in Timing Diagram	5-2
select the active disassembler	6-5, 6-7
select the current drive, File Manager	6-4
selective glitch triggering by channel	4-30
self-test, description	3-5
self-test, procedure	3-6
SEQ board	7-8
SEQ board, location	1-7
serial printer parameters	6-18
serial printer, pin assignments	Chapter 8
setting the number of Timing channels	5-4
setup data, sample	A-9
setup files, directory	6-3
signals, internal	7-1
software analysis with Data List	5-14
source memory	2-16
source memory from Data List	5-23
source to reference transfer	5-11
source to reference transfer, Data List	5-23
Special menus	6-1
special probe options	B-11
specifications	Appendix B
specifying a file name for store/recall	6-6
standard equipment	1-3
standard operating mode (STD)	4-3
start recording (RUN/STOP)	4-32
state table (Data List)	5-14
state triggering	4-26
storage format, LA files	A-4
storage of interlaced data	A-8
store after compare	6-15
stored setup file	A-7
storing a setup	6-7
storing data to disk	6-4
string, for interface test	6-21
sub-directories from File Manager	6-3
T-marker in the Data List	5-20
T-marker in Timing Diagram	5-7
TBQ board	7-3
TBQ board, location	1-7
terminals for self-test (SEQ)	7-16

test terminals for self-test 3-5
testing I/O interface 6-21
threshold voltage 4-4
time base, internal 7-4
time distances for markers, Timing Diagram 5-9
Time Measurement Board (TMB) option 7-15
time measurement data format A-9
time measurement indicator, Timing Diagram 5-5
time window, effect on trigger filter 4-19
time window, Trigger Sequence 4-15
time windows 4-28
timing daigram for self-test 3-7
Timing Diagram 5-1
Timing Diagram, introduction 2-16
TMB 7-16
TMB board, location 1-7
tolerance (jitter) for comparisons 6-14
trace all/no data (normal recording) 4-20
trace conditions 2-14
trace selections, data qualified recording 4-20
traces, Timing Diagram 5-2
transition recording mode 4-22
transition, searching for 5-13
trigger conditions, setting 4-14
trigger delay on DMB 7-14
trigger environment, controlling 4-18
trigger filter, on SEQ board 7-9
trigger instruction 4-29
trigger level, on SEQ board 7-10
Trigger Monitor 4-32
Trigger Monitor, introduction 2-14
trigger point within memory 2-13
trigger point, data qualified recording 4-21
trigger point, delaying 4-16
trigger search, level change control 7-11
Trigger Sequence menu, introduction 2-14
trigger word mnemonics 4-12
Trigger Words menu fields 4-9
Trigger Words menu, introduction 2-13
triggering and recording data 2-15
triggering capabilities B-8
triggering on glitches 4-30
triggering on pattern/glitch 4-31
turning probes off in Configuration menu 4-3
typical use of the LA 2-11

UPR (universal probe rack) 7-18

values, changing with ROLL UP, ROLL DOWN 2-3
verifying operation (self-test) 3-5
viewing window, Timing and List 2-15
voltage, AC 3-1
voltage, threshold 4-4

waveform data 5-1
word condition, Trigger Sequence 4-15
word recognizer, Trigger Sequence 4-15
word, searching in Data List 5-25

KONTRON ELECTRONICS

Technical Publications Remarks Form

Please use this form to submit your suggestions for revisions, corrections, or additions to this publication. Your comments will be promptly investigated by appropriate technical personnel, and action will be taken as required. If your answer to any of the questions is 'NO' or requires qualification, please include any additional comments on a separate sheet and enclose it inside this pre-addressed form.

TITLE: _____ ORDER NO. _____ DATED _____

	YES	NO
DOES THIS DOCUMENT MEET YOUR NEEDS?	_____	_____
IS THE MATERIAL CONTAINED IN THIS DOCUMENT:		
ACCURATE?	_____	_____
EASY TO READ AND UNDERSTAND?	_____	_____
ORGANIZED FOR CONVENIENT REFERENCING?	_____	_____
WELL ILLUSTRATED WITH USEFUL EXAMPLES?	_____	_____
COMPLETE?	_____	_____

CUT ALONG DOTTED LINE

ERRORS IN THE PUBLICATION

SUGGESTIONS FOR IMPROVEMENT

(Please Print)

FROM: NAME _____ DATE _____

ORGANIZATION _____

ADDRESS _____

TITLE _____

NO POSTAGE
NECESSARY
IF MAILED
IN THE
UNITED STATES

BUSINESS REPLY MAIL

FIRST CLASS PERMIT NO 608 CULVER CITY CA

POSTAGE WILL BE PAID BY ADDRESSEE

ADVANCED
ELECTRONIC
INSTRUMENTATION

KONTRON
ELECTRONICS

Technical Publications
18001 Cowan
Irvine, CA 92714

KONTRON ELECTRONICS

A B I T M O R E

U.S. HEADQUARTERS
Kontron Electronics
244 Sobrante Way
Sunnyvale, CA 94086
Tel: 800-227-8834
Tel: 408-733-0272
Fax: 408-733-0378

KONTRON TECHNICAL CENTERS
Kontron West, Inc.
244 Sobrante Way
Sunnyvale, CA 94086
Tel: 408-733-0272
Tel: 800-227-8834
Fax: 408-733-0378

Kontron North East Corp.
66 Cherry Hill Road, Suite 100
Beverly, MA 01915
Tel: 508-921-4700
Fax: 508-921-4544

Kontron Mid-Atlantic Corp.
14100 Laurel Park Drive, Suite B
Laurel, MD 20707
Tel: 301-792-4987
Fax: 301-725-7869