THE BELL SYSTEM Technical Journal

DEVOTED TO THE SCIENTIFIC AND ENGINEERING
ASPECTS OF ELECTRICAL COMMUNICATION

VOLUME XLIII SEPTEMBER 1964 NUMBER 5, PART 2

NO. 1 ELECTRONIC SWITCHING SYSTEM

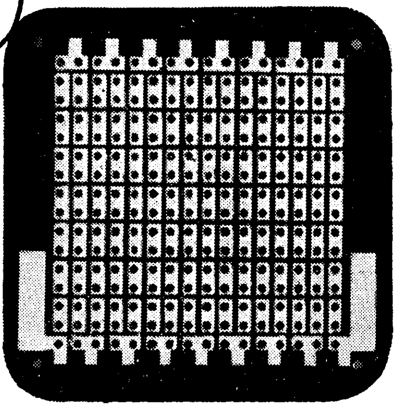

THE BELL SYSTEM TECHNICAL JOURNAL

THE BELL SYSTEM TECHNICAL JOURNAL is published six times a year by the American Telephone and Telegraph Company, E. J. McNeely, President, C. E. Wampler, Vice President and Secretary, J. J. Scanlon, Vice President and Treasurer, 195 Broadway, New York, N. Y. 10007. Subscriptions are accepted at $5.00 per year. Single copies $1.25 each. Foreign postage is $1.08 per year or 18 cents per copy. Printed in U.S.A.

THE BELL SYSTEM
TECHNICAL JOURNAL

VOLUME XLIII SEPTEMBER 1964* NUMBER 5, PART 2

Contents, Part 2

---

* *This issue of the Bell System Technical Journal was not published until after October 15, 1964.*

No. 1 ESS Switching Network Plan

By A. FEINER and W. S. HAYWARD

(Manuscript received January 13, 1964)

An eight-stage space division switching network with ferreed crosspoints was adopted for No. 1 ESS. It has a low crosspoint count and is adaptable to a wide range of office sizes and traffic parameters. This article discusses the network topology, control philosophy, and traffic aspects.

I. INTRODUCTION

This article presents the topology, traffic properties and control of the switching network for No. 1 ESS. Companion articles describe the physical implementation of the network[1] and its control.[2] In the near future, an article dealing with the program control will be published.

To assist the reader with unfamiliar terms, a brief list of definitions is given in the Appendix.

In connection with the plans to develop an electronic central office, the problem of switching network design has received much attention. Due to the many, often conflicting, requirements and possible choices of technology and geometry, the synthesis process requires a fair measure of that ill-defined catalyst commonly referred to as "intuition." The invention and the successful development of the ferreed[3,4] provided the technological solution that resolved the early difficulties of all-electronic networks. The ferreeds provide a metallic transmission path while retaining high switching speed.

Among the early recognized requirements was the desire to use the switching network not only for the obvious function of interconnecting lines and trunks, but also for all link functions — connections between signal transmitters and trunks, ringing circuits and lines, etc. The reasons behind this requirement were to simplify trunk circuits, to eliminate the problem of engineering and administering several different networks, to simplify control, to provide the connecting function at high efficiency and to provide full freedom to associate trunks with all types of signaling circuits.

The field of application envisaged for No. 1 ESS encompasses offices from just a few thousands to many tens of thousands of lines, with line occupancies and ratios of intraoffice to interoffice traffic highly variable from one office to the next. From the standpoint of manufacture and engineering, it is important that this wide range of requirements be met with a single, standard, but adequately flexible, network plan rather than with numerous custom-tailored solutions.

This approach, however, leads to a compromise and results in some loss of efficiency at the extremes of the parameter range.

The total cost of the network can be viewed as consisting of three main parts:

(a) the cost of network crosspoints

(b) the cost of equipment directly associated with network controls (this usually grows with the number of links), and

(c) the proportionate share of central processor cost applicable to the handling of the network.

Freedom from standard matrix sizes embedded in the electromechanical technology (such as crossbar switches) and promise of more subtle network control methods opened the way for considering networks with a larger number of switching stages containing, perhaps, switches of smaller dimension. It was felt that this would permit attaining large network sizes, while retaining a low crosspoint count per line.

The network plan developed for the Morris, Illinois, trial exchange,[5] largely upon ideas of Mr. C. E. Brooks, underwent much scrutiny and served as a point of departure. It was felt that a further crosspoint saving could be made by changing the topology; more importantly, an improvement in growth characteristics was sought.

Independently from studies of central office networks, an exploration of suitable remote concentrator arrangements was being carried out at that time. It yielded the two-stage concentrating configuration shown in Fig. 1.

The first stage of the concentrator is formed by four 16×8 switches in which each of the sixteen inputs has access to only four output links. The placement of crosspoints is identical to the position of diodes in a binary to one-out-of-sixteen diode translator. As a result, every input has access to each of the four pairs of output links. Since these are distributed in pairs over the four-output 8×4 switches, the resulting configuration provides access from every input to every output.

The numerical elegance of this pattern, the economy of crosspoints, and certain other properties (such as the fact that the first-stage switch maps into a full 8×8 switch) made a full-scale investigation appear worthwhile.

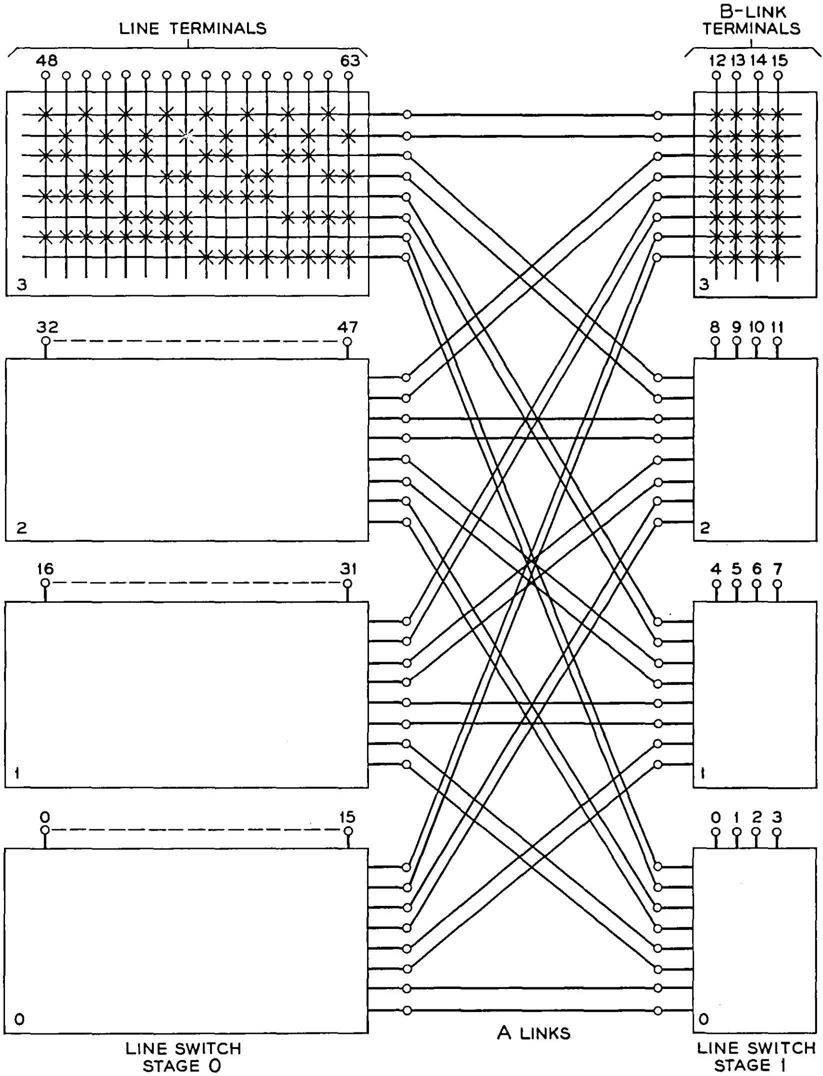

Fig. 1 — A 64-to-16 two-stage concentrator arrangement.

The performance capabilities of this concentrator were studied with the help of a computer simulation; the results will be discussed later in this article.

The attempt to solve the problem for a concentration ratio of four originated in the knowledge that the average occupancy of a line in the

Bell System is about 0.1 erlang and that most economical switching networks investigated at that time were capable of internal link occupancies of 0.4 erlang.

II. THE OCTAL NETWORK

2.1 *Over-All Plan*

The binary nature of the ESS control language led to adoption of switch and grid sizes characterized by numbers of terminals that are powers of two to realize translation and control economies. The choice of switch size was made on the basis of studies of physical design, control cost and number of switches needed to meet objective size and traffic capacity. Of the binary sizes, 4 × 4, 8 × 8 and 16 × 16 were obvious contenders; 8 × 8 was chosen. Considerations of access and blocking in the largest network size led to the adoption of a network with eight stages of switching.

Topologically, the network consists of four-stage groupings of which there exist two types — the line link networks and the trunk link networks. Connecting these subnetworks among one another are junctor groups provided in a pattern consistent with the specific size and traffic character of a given office.

As the name implies, the subscriber lines connect to the line link network. Two basic sizes exist for the line link network. One, with a concentration ratio of 4:1 in the first two stages of switching, provides terminations for 4096 subscribers; the other, developed with higher traffic loads in mind, has 2:1 concentration and provides terminations for 2048 inputs. A constant number of 1024 junctor terminals characterizes all (fully equipped) link networks.

Trunks and service circuits connect to the trunk link networks; these have the basic size of 1024 trunk terminals.

Fig. 2 shows an example of the network in an office with approximately 8000 subscribers and 1000 trunk and service circuits. A novel feature of the octal network is the method of handling intraoffice calls; these are routed on direct intraoffice junctors that link the line link networks among one another and to themselves and bypass the trunk link networks. The intraoffice junctors contain the circuitry to apply battery and to supervise both subscribers.

2.2 *The Line Link Networks*

The first two stages of the line link network contain a concentrator arrangement, shown in Fig. 3(a) for the 4:1 ratio and Fig. 3(b) for the 2:1

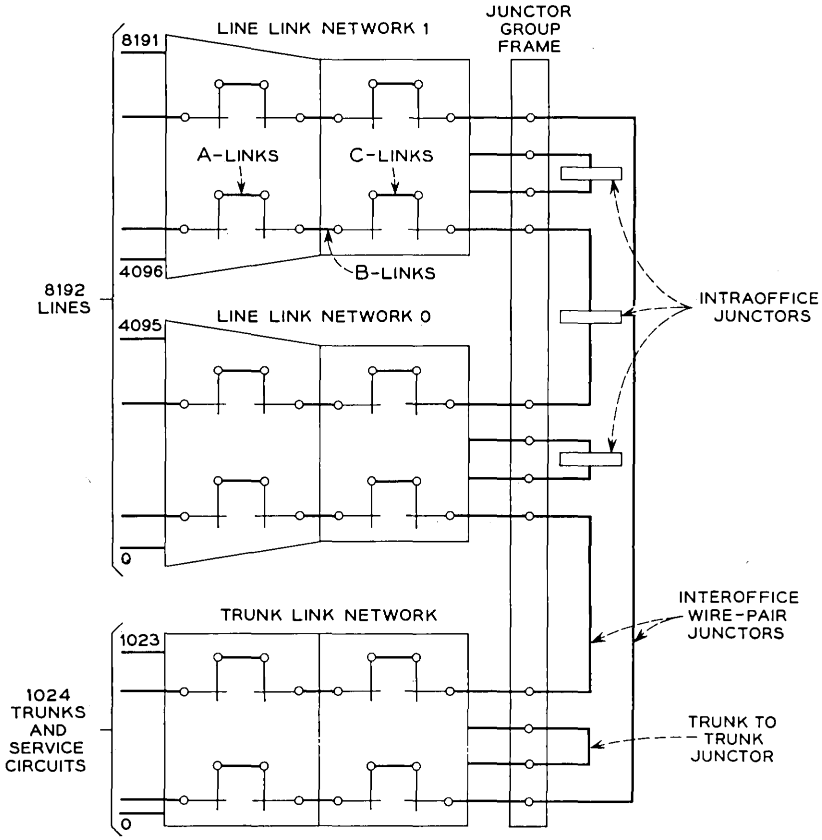

Fig. 2 — An example of the network for an office with 8000 lines and 1000 trunk and service circuits.

ratio. The first is a slight modification of the previously described concentrator; the change in the first-stage switch pattern was found to sacrifice little traffic carrying capability and simplified the internal structure of the ferreed switch. The third and fourth switching stages are formed from 8 × 8 switches in both types of line link networks, organized into 16 grids (see Fig. 4). This configuration provides every line with full access to the 1024 junctors. It is convenient when dealing with grid networks of this type to express the access within the network as the product of the individual switch access numbers

$$A_{LLN} = a_1 \cdot a_2 \cdot a_3 \cdot a_4$$

and with $a_1 = a_2 = 4$ and $a_3 = a_4 = 8$

$$A_{LLN} = 1024.$$

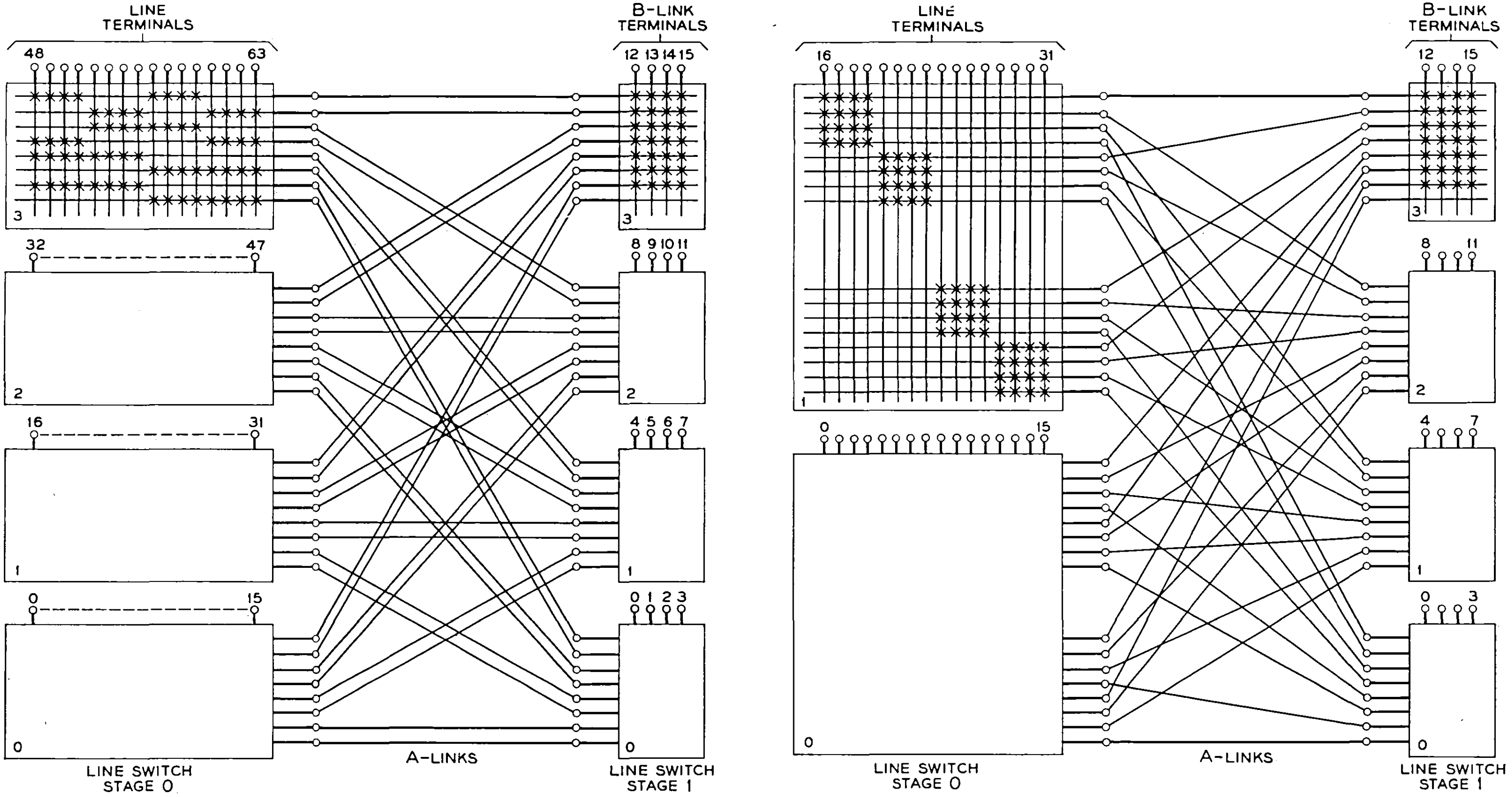

(a)

(b)

Fig. 3 — (a) A modification of the 4:1 concentrator of Fig. 1 for No. 1 ESS network. (b) The 2:1 concentrator connection pattern.

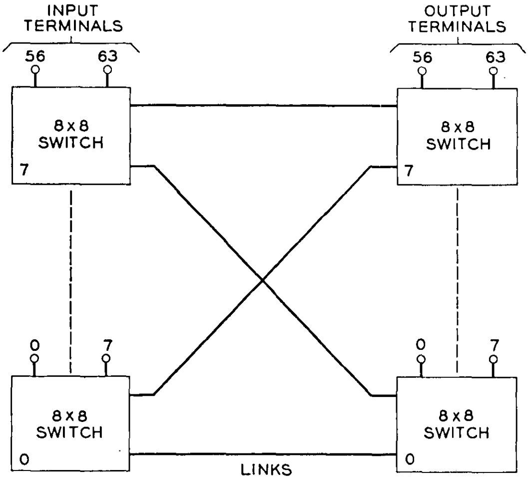

Fig. 4— The 8 × 8 grid.

This provides a quick verification of the full-access nature of the line link network; needless to say, proper link distribution between the concentrating stages and the 8 × 8 grids must be observed. In this case there must be one B link between every concentrator and every grid.

The equipment design of the network is discussed fully in other articles.[1,2] It will suffice here to say that the line link network contains two types of frames — the line switch frames, into which are packaged 16 concentrators, and the junctor switch frames containing eight octal grids each. In addition to the crosspoint arrays, the line switch frames house the equipment that constitutes the line circuits, namely the line scanner and the ferreed devices for removing the current-sensing ferrod element from the line after a service request has been detected and registered. The junctor switch frames also contain additional ferreeds, one per junctor, that provide test access into established network connections. Fig. 5(a) shows the composition of a line link network in terms of these equipment units.

All of these equipment frames contain their own duplicated control circuits. These circuits receive and translate orders from the central processor and perform all the other functions that lead to their execution. Typically, an order calls for the closure of a specified path through the two switching stages contained in the frame.

The two duplicated control units work independently of each other; when both are functioning properly, each restricts its activity to its assigned half of the network contained in the frame.

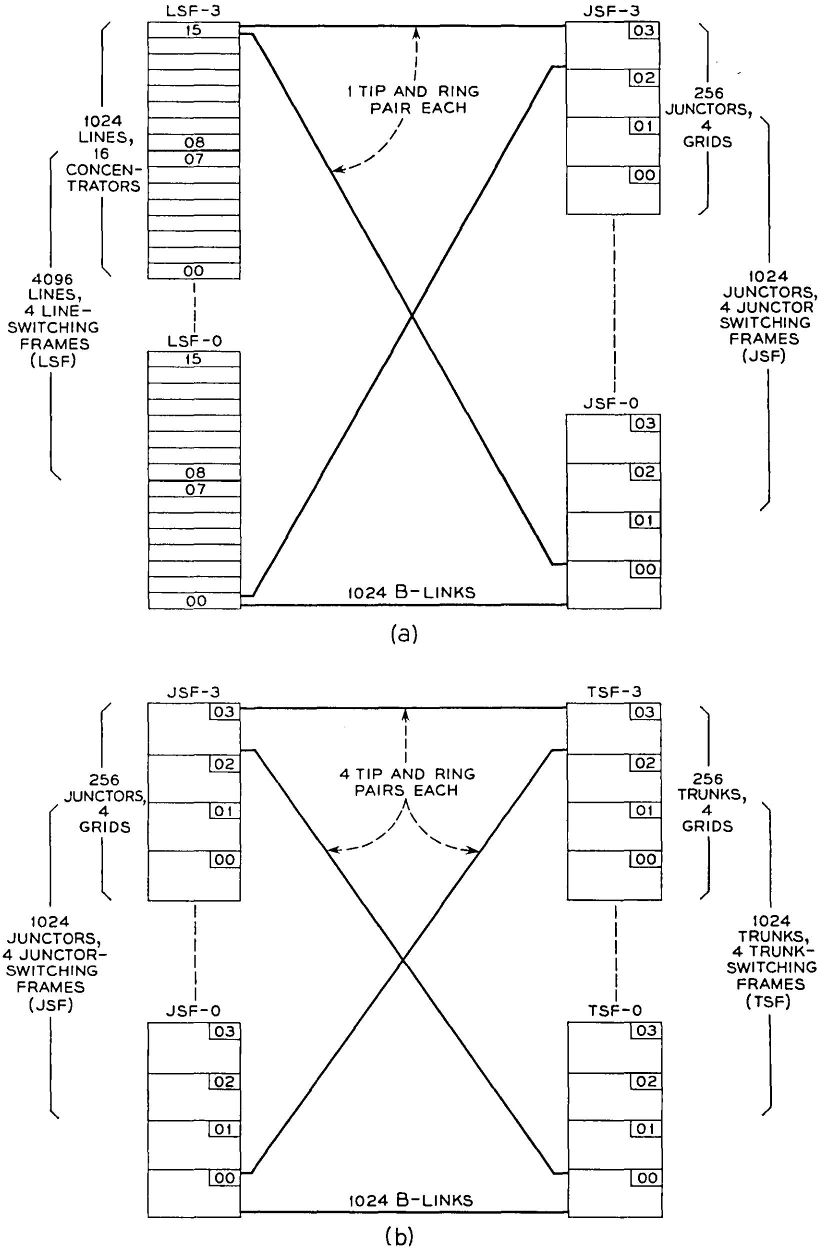

Fig. 5 — (a) Line link network (with 4:1 concentration). (b) Trunk link network.

2.3 *The Trunk Link Network*

When the trunk link network was first studied, it was proposed to construct it as a three-stage network containing a 16 × 16 switch at the trunk side followed by two stages of 8 × 8 switches. This naturally resulted in the convenient full-access subnetwork of 1024 inputs and 1024 junctor outputs ($16 \times 8 \times 8 = 1024$). Further investigation has shown, however, that at the slight control complication of introducing another stage, a substantial gain in traffic carrying capacity could be realized with the same number of crosspoints per terminal by going to four stages of 8 × 8 switches.

Since the trunk link network access is thus increased to $A_{TLN} = 8^4 = 4096$, if the same size of the trunk link network of 1024 × 1024 is retained, a multiple access from trunks to junctors is obtained with every trunk capable of reaching every junctor by four different paths. This reduces considerably the trunk-to-junctor blocking despite the addition of a stage of switching.

Two types of equipment frames are contained in the trunk link network. One of them is the junctor switch frame that also serves as a building block for the line link network. The other, the trunk switch frame, contains the same number of octal grids but has none of the test access provisions of the junctor switch frame. Fig. 5(b) shows the composition of a trunk link network.

2.4 *Interconnection within Line Networks*

Fig. 6 gives a three-dimensional view of a full line link network, showing in skeleton form the way in which frames are connected together. Concentrators are shown as horizontal planes; octal grids are shown as vertical planes. The connections between line switch frames and junctor switch frames, B links, are shown only for the edge of the link network. This diagram gives a picture of how all lines have access to the 16 B links of their concentrators and of how each B link connects to a different octal grid in the junctor switch frame. The grids in turn give each B link access to 64 junctors. Fig. 7 gives a similar representation of a full trunk link network. Pictorial representation is more difficult here. Each trunk has access to 64 B links which are treated as four groups of 16 links. Each group of 16 covers the 16 octal grids of the junctor switch frames.

2.5 *Partial Network*

The size of a link network is large. Equipment frame sizes, on the other hand, have been so chosen that the incremental cost of buying equipment

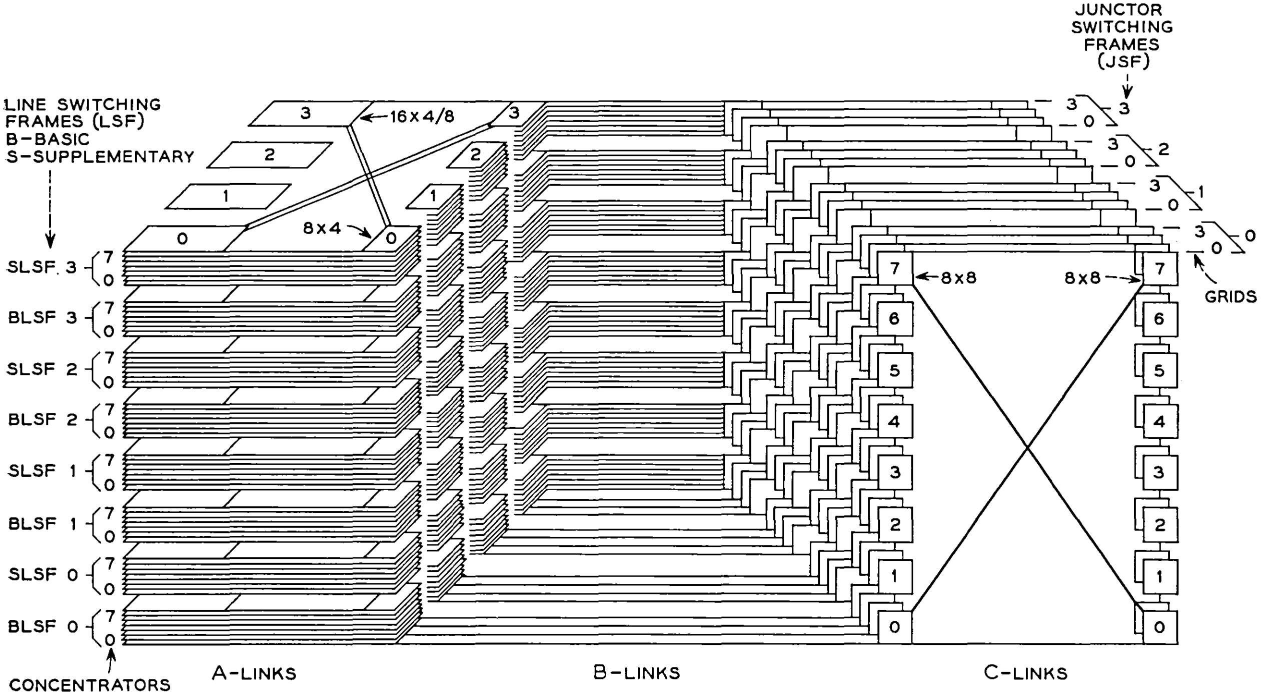

Fig. 6 — Schematic diagram of line link network.

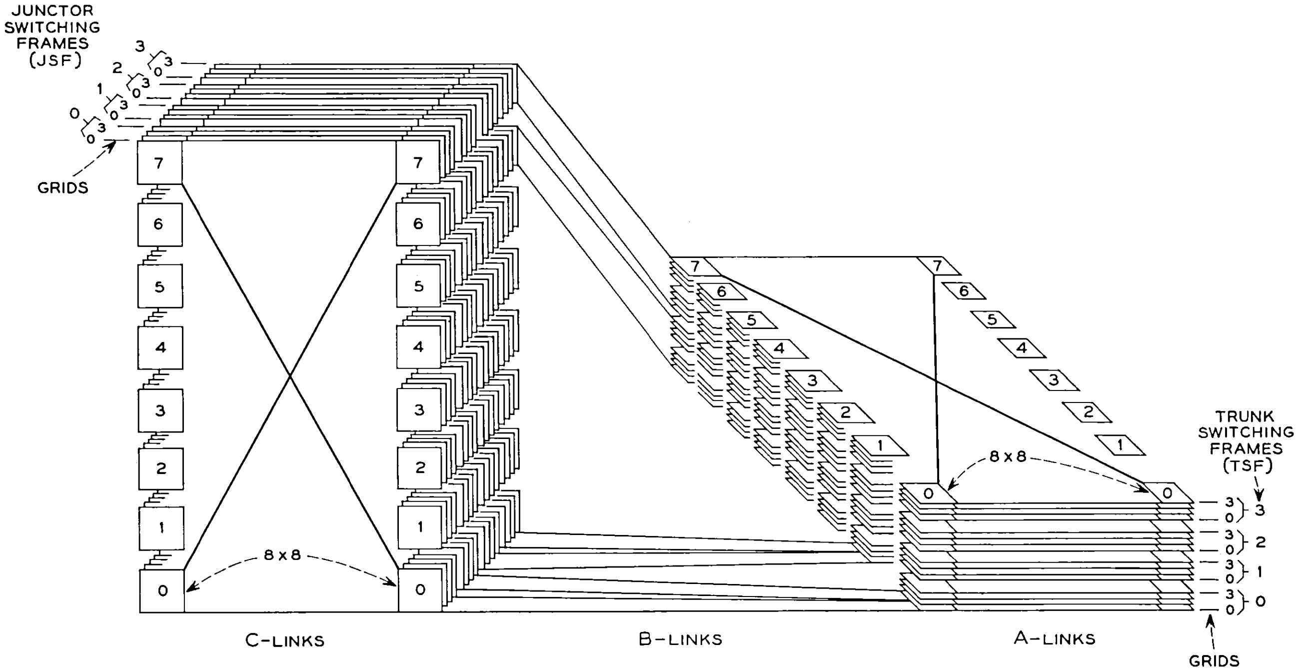

Fig. 7 — Schematic diagram of trunk link network.

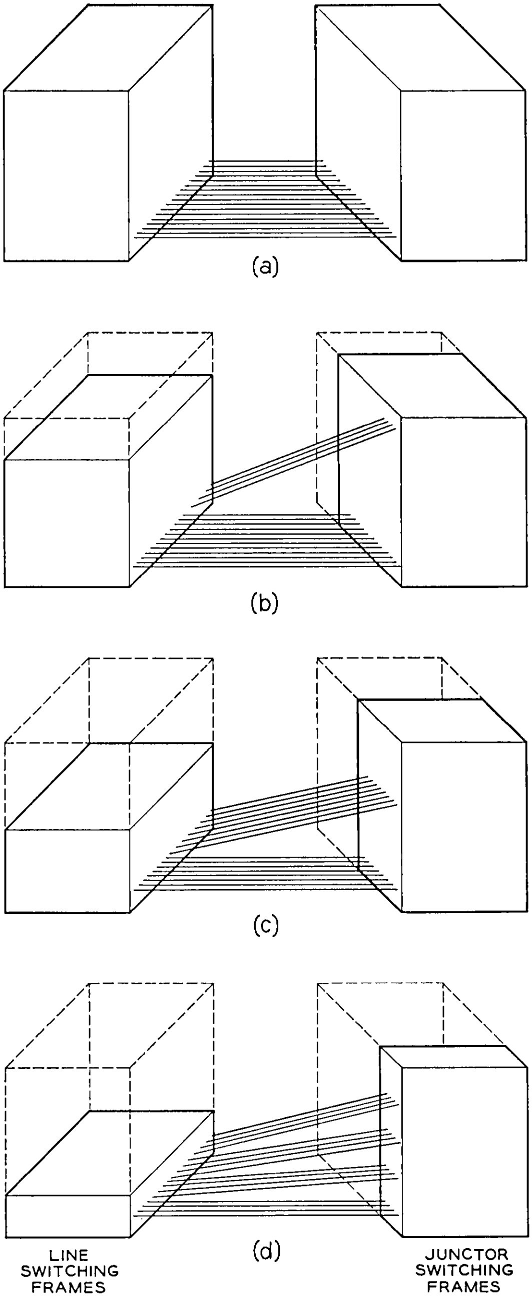

Fig. 8 — Schematic diagram illustrating the partial equipping of line link networks.

can be kept within reason. In the frame design, a compromise has been made between the savings resulting from manufacturing equipment in large units and the excess amount of equipment that may be purchased in each installation because of the necessity of buying integral numbers of frames. As mentioned previously, line switch frames provide terminals for 1024 lines (512 for the 2:1 line concentrator), junctor switch frames for 256 junctors and trunk switch frames for 256 trunks. In order to equip a network with fewer than its full complement of frames, a special wiring plan must be used. Line or trunk switch frames are easily omitted, since they take with them their B link traffic. To omit a junctor switch frame, however, it is necessary to reassign some of the B links which carry traffic from the line or trunk switch frames. Fig. 8 shows in a simplified form based on Fig. 6 how a group of 16 B links from a line concentrator is reassigned for quarter, half, three-quarter and full line link networks. Similar patterns are used for the trunk link networks, although they are somewhat more complicated by the large number of parallel paths. Partial equipping in either link network increases the number of parallel paths while reducing the number of junctors available for connections to other link networks. The two offset each other to a certain extent, so that partial link networks can be traffic loaded almost as efficiently as full link networks.

2.6 *Network Sizes*

Up to now a line link network of 2048 or 4096 lines and a trunk link network of 1024 trunks have been described. If the line and trunk average usages happen to be just right, these link networks carry traffic with high efficiency. If, however, the load per line or trunk is too high, not all terminals can be assigned. On the other hand, if the terminal load is too low, some of the switching equipment is wasted. To reduce the waste in the latter case, wiring patterns have been evolved which provide for up to twice as many line or trunk switch frames as make up the basic network. Thus up to 8192 lines may appear on a line link network and up to 2048 trunks on a trunk link network. This higher concentration ratio from terminal to junctor is achieved by multipling B links at the third stage of the network. Fig. 9 shows the effect on crosspoint requirements in a line link network with an upper traffic bound of 0.4 occupancy on its links. (Cutoff and test access crosspoints are included.) Unfortunately, except in the maximum size, one cannot merely add new links to the basic links without rearrangement. To do so would result in the added equipment being served only by shared links, while the basic equipment would be served by a mixture of shared and private links. The resulting

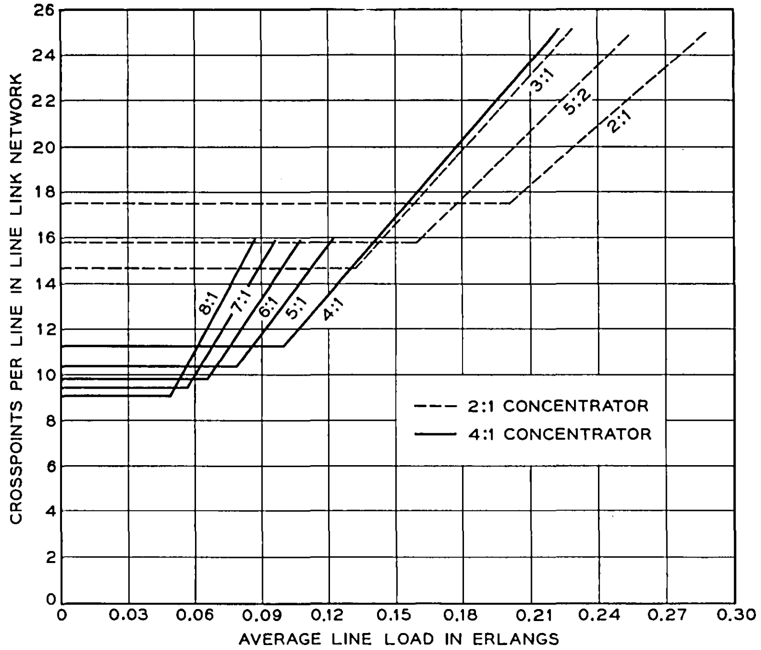

Fig. 9 — Crosspoints per line as a function of line usage when an upper bound of 0.4 occupancy is selected.

uneven service is unacceptable; instead, the patterns are arranged to provide as nearly equal sharing as possible. In choosing the patterns, attention was given to reducing the number of link reassignments that would be necessary if the average load per line or trunk should change significantly. Patterns for partial equipping are unaffected by the choice of concentration ratio.

Central offices with heavy PBX development may have line usage as much as twice the usual average. A blank terminal on a line switch represents not only wasted crosspoints, but a wasted scan point, cutoff contact and main distribution frame appearance. As the demand appeared high enough, the second design of line switch frame was made in which 512 lines reach 256 B-links. By similar multipling of B-links this frame can fill the gap between average usage and double usage on lines.

2.7 *Junctor Patterns for Growth*

The link network junctor terminals are cabled to plugs and jacks to make possible orderly transitions from one size office to another, both at the time new equipment is installed and afterwards to take care of changing traffic patterns. Fig. 9 shows how the 64 subgroups of a network are cabled to the junctor grouping frame. A subgroup contains 16 junctors, each junctor from a different octal grid. Half of the subgroups are jack ended and half plug ended — one jack or plug per subgroup. Interconnections are made only within the shelves shown on Fig. 10. Plugs and jacks always interconnect different numbered switches to insure two different sets of C links on connections originating and terminating within a link network.

The junctor grouping frame is also used to insert junctor circuits in

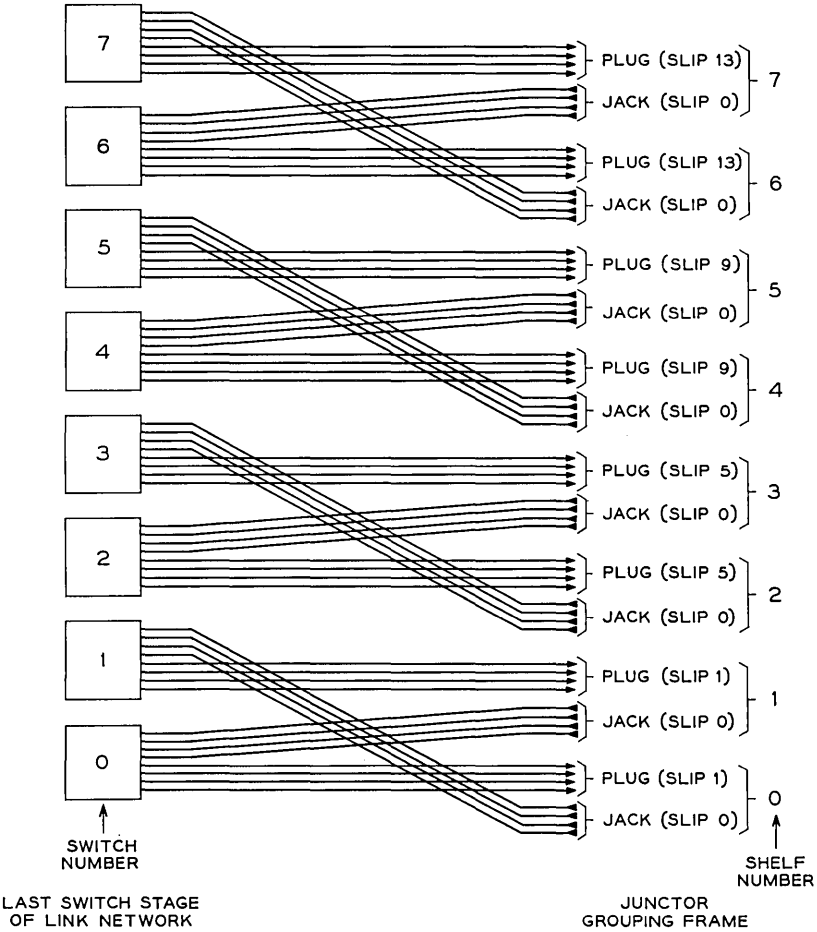

Fig. 10 — Junctor group assignments.

line-to-line junctor subgroups. One side of each circuit terminates on a plug, the other on a jack. Connecting a line-to-line subgroup consists of inserting a line link network plug into a junctor circuit jack, then inserting the corresponding junctor circuit plug into a line link network jack.

It is convenient to use the linear-graph representation of the network in discussing the next aspect of junctor connections. Fig. 11 shows the links available for paths between two lines with a subgroup connected plug-to-jack on shelf one (solid) and shelf three (dashed). The junctors are seen to be "slipped" by one and five terminals, respectively. A slip of at least one is necessary for making a connection between lines assigned to the same concentrator — a slip of zero would provide no path for intraconcentrator calls because the same B link would be required twice on any path. A slip of at least four is necessary for completing calls between lines on the same line switch. The additional choice of paths provided by giving a second set of junctors a slip which differs from the slip of the first by at least 4 gives many more opportunities of finding paths than a simple parallel choice. The second set aligns both the A links and B links of the two ends of the connection in different combinations. As noted in Fig. 10, the plugs are wired for slips of 1, 5, 9 and 13. The definition of an actual slip depends on the point of view. The solid wiring of Fig. 11 gives a slip of 1 when viewed from left to right, but a slip of 15 when viewed from right to left. Thus 8 slips (1, 3, 5, 7, 9, 11, 13, 15) are available in the assignment of junctors — governed by the choice of shelf on which junctors are connected and whether the connection is plug-to-jack or jack-to-plug.

When networks are partially equipped with either one, two or three junctor switch frames, the junctor wiring is changed so that full junctor subgroups still appear on a plug or on a jack. As with the B links, the particular choice of wiring is made with the objective of reducing the number of wires that must be moved as the network grows.

III. NETWORK CONTROL

3.1 *Path Searching*

A basic decision in the design of the switching network was that of isolating completely the path searching function from the switch itself. External control circuits cannot determine directly the states of the crosspoints within a switch. In accordance with the general No. 1 ESS approach, the central processor makes all path searches and keeps a continuous record of all pertinent switching information in its temporary

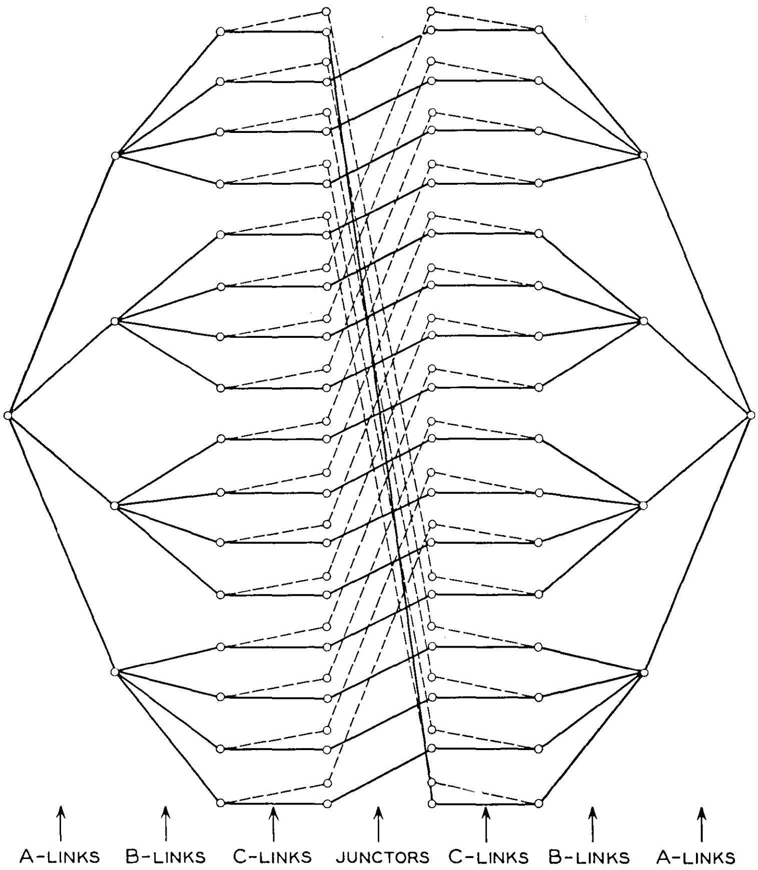

Fig. 11 — Linear graph of line-to-line paths with two junctor subgroups.

memory, the call store. Programs which use this information, either in setting up paths or in releasing them, must keep the network records up to date. Network records are among the most vital of those kept in call store. Their loss would be equivalent to the loss of power in an electromechanical switching network. The memory reliability has been made high. Beyond this, the network control programs have been designed to keep the chance of error low.

The format of the switching network record in call store was chosen with a view toward low processing time in establishing or releasing network connections. The records are somewhat redundant because of this objective but the redundancy also provides additional insurance against memory failure. There are two basic records: "link memory" is provided on a basis of one bit for each link and is used in the path searches. A "0" indicates a busy link; a "1" indicates an idle link. "Path memory" is provided on a basis of one word for each junctor terminal in a line link network and one word for each trunk terminal in a trunk link network. It is used to store data necessary for releasing connections.

Let us consider first the link memory and, for example, the problem of finding a path between two lines. This can be divided into searches for a path from a line to a junctor on the terminating and on the originating link networks and then a search for a commonly accessible junctor. Fig. 12(a) gives a graph of a typical situation showing link status. Fig. 12(b) gives the corresponding link words. The 16 lines terminated on a line switch have access to 8 A links. The bits for these links (and for the 8 links in an adjacent switch) are contained in a single link bit word. Through the A links, each line has access to 16 B links. Again the 16 bits corresponding to these links are contained in a single word. Now a path through the network must be set up through an idle A link and an idle B link. By suitable masking and shifting, the bits corresponding to the 4 eligible A links can be extracted, and from them a 16-bit word can be generated with 4 bits for each A-link bit occupying positions corresponding to each of the eligible B links. The resultant 16-bit word can now be combined using the logical AND central control function, with the B-link bit word to produce a matching word in which 1's represent those idle links with free paths to the particular line. Continuing through the network, each of the B links can reach 8 C links. The link bits corresponding to these C links are so arranged that a bit in a C-link word represents one of the C links accessible to a B link (represented by a bit occupying a corresponding position in a B-link word). A C-link word can therefore be combined with the matching word to test 16 paths one stage further into the network. A similar action on a junctor link bit word results in a matching word indicating all available paths from line to a selected subgroup of 16 junctors. Junctor connections between link networks are always made in integral numbers of these junctor subgroups. Different combinations of link and junctor words can be used to match paths from a line to any of the 64 subgroups of a full link network.

After a matching word is determined between originating line and junctor subgroup, a similar word can be derived for the terminating line and the same subgroup. Assuming that idle paths exist in both words, it is now necessary only to take into account the junctor slip. Because of this slip the bit positions in the matching word for one network will not correspond to those in the matching word of another network. One of

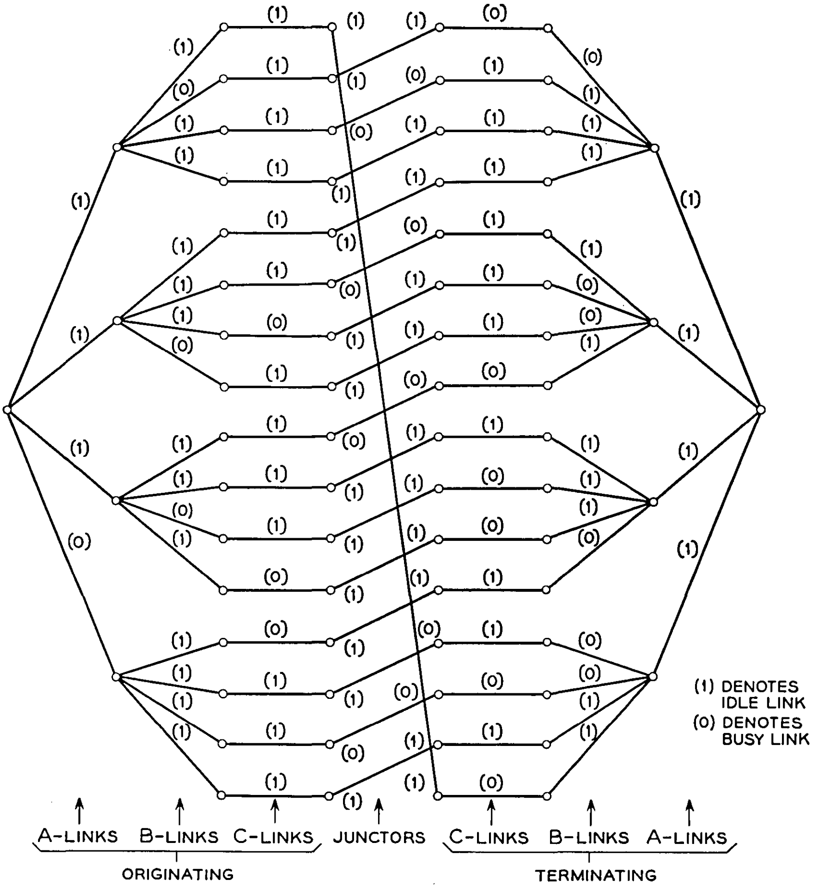

(a)

	ORIGINATING	TERMINATING
A-LINK	1110 1101 1110 0110	1011 1111 1110 1111
EXPANDED A-LINK	1111 1111 1111 0000	1111 1111 1111 1111
B-LINK	1011 1110 1101 1111	0111 1001 1110 0011
A-B	1011 1110 1101 0000	0111 1001 1110 0011
C-LINK	1111 1101 1110 0111	0111 1110 1001 1010
A-B-C	1011 1100 1100 0000	0111 1000 1000 0010
JUNCTOR	1101 1011 0111 1101	1011 0110 1111 1011
A-B-C-J	1001 1000 0100 0000	0011 0000 1000 0010
ROTATED ORIGINATING WORD		0011 0000 1000 0001
MATCHING WORD		0011 0000 1000 0000

(b)

Fig. 12 — (a) An example of the states of the links of a line-to-line connection. (b) Searching a path.

the words is "rotated" to line up the path bits and then the two words can be combined to see if any free path exists. If so, the central control order for finding the leftmost 1 can be used for fast identification of the path. If not, a second junctor subgroup must be tested. Because the above method tests 16 paths at a time and because there is a reasonably high chance of success on the first junctor subgroup chosen, searching time is relatively low. Other concentration ratios and partially equipped link networks require variations on the steps given in this example.

A further complication, not shown above, is the necessity of reusing links which have been in use on a previous section of a call or which are being reserved for an anticipated connection. Thus, in the example, at least the A and B links which were used in the dialing connection to the originating line should be available for the line-to-line connection used. Similarly, the A and B links reserved for the line-to-line connection should be available for ringing connections. Failure to make these links available would drastically reduce network capacity.

Link bits contain sufficient information to hunt an idle path between two network terminals. They do not, however, contain enough information to identify a path for releasing a connection, because they do not indicate which link is connected to which. This information is stored separately in blocks of call store named "path memory words." Line path memory words are assigned in blocks of 1024, with each word corresponding to a junctor terminal of a line link network. Trunk path memory words are assigned in blocks of 256, with each word corresponding to a trunk terminal of a trunk switch frame. A line path memory word contains the identity of the line connected to the associated junctor, while a trunk path memory word contains the identity of the junctor connected to the associated trunk. Additional bits in these words identify the path used when more than one path is possible between the junctor and line or trunk.

The correspondence between path memory word and network terminal was chosen to simplify most of the programs which change link bits when a path is released. Thus when a trunk indicates that a network path is no longer needed, translation from trunk identity to network termination serves also to locate the trunk path memory word. This in turn identifies the line-to-trunk junctor number which serves to locate the line path memory word. Line-to-line connections are traced in a similar fashion, but additional information is needed on trunk-to-trunk connections because only half of the path can be traced from the trunk path memory word, and there is no path memory associated with trunk junctor terminations. On trunk-to-trunk connections, therefore, additional path memory is provided in a register associated with the call.

3.2 *Network Actions*

Searching for a path is only part of the network control job. Orders must be issued to the switch frame controllers to close the specified crosspoints, to signal distributors to open or close relays in trunks, and to scanners to verify that all orders have been properly executed. Because the time restrictions on the network are given in tens or hundreds of milliseconds, relays have been used in both switch frame and signal distributor controllers. To match the high-speed central control with the slower-speed relay circuitry, a cyclic method of controller operation has been adopted. Orders are issued in batches at about 25-millisecond intervals. The program which sends out orders keeps its own record of those controllers it has called and will not send two orders to the same controller in one batch. This record is kept in call store, where it can be interrogated at central control speed without waiting for the slow response time of the controllers themselves.

A new batch of orders is sent when four full five-millisecond intervals have passed after the last order of the previous batch; since the interval in which the batch was sent cannot be counted, the expected time between batches is 25 milliseconds. To meet this method of timing, the controllers must finish their work in under 20 milliseconds. At extreme traffic loads, the time taken to issue the orders, when added to other essential work, may stretch many cycles out to 30 milliseconds.

Network actions are controlled in two parts. The first program prepares a list which is placed in a call store area named a "peripheral order buffer." This list contains instructions for the proper issuing of controller orders and is held until the connection is set up. The second program scans the controllers at the start of a network cycle to check that all are ready to receive new orders. It then works through the list, sending out as many orders as it can. When it reaches a point at which it cannot proceed further, either because of a planned delay or because it finds an order to a controller that has already received an order in that cycle, it proceeds to the other buffers which have waiting work. If it finishes a list, it reports back to the call processing program which had requested the connection.

Consider, for example, the task of setting up a path between an incoming trunk and a line. At the time this connection is to be made, the calling trunk is connected to a ringing tone trunk and the called line is connected to a ringing trunk. The functions to be performed are, in order:

(1) open cut-through relay in ringing trunk*
(2) open cut-through relay in ringing tone trunk*
(3) open cut-through relay in incoming trunk
(4) delay for one network cycle to allow relays to open
(5) close second-stage crosspoint in line concentrator
(6) close two crosspoints in trunk switch frame
(7) close two crosspoints in trunk junctor switch frame
(8) close two crosspoints and test access crosspoint in line junctor switch frame; make false cross and ground test
(9) wait one cycle for test to be completed
(10) open test access point in line junctor switch frame
(11) close last crosspoint in line concentrator
(12) wait one cycle for crosspoints to act
(13) close cut-through relay in incoming trunk
(14) wait two cycles for relay action and for transient decay
(15) scan for line current at the incoming trunk to verify continuity of connection
(16) report back to originating program.

The network control program places the list of orders for this sequence in a peripheral order buffer. At 25-millisecond intervals the list processing program will work as far through this list as it can get. Assuming no delays from busy controllers, the first delay will occur at step (4). A pointer will be left at step (5) so that on the next cycle the list processing can be taken up again through step (9), and so forth, until the path is verified.

IV. TRAFFIC PERFORMANCE

As indicated earlier, the large number of meshed paths in the network makes possible a high efficiency of the network links for objective levels of blocking. In actual use this high efficiency must be weighed carefully, since, as with most traffic carrying facilities, an increase in efficiency at a given service point results in more rapid decline in service at loads beyond this point. The evaluation of a network design includes an examination of a range of loads to make sure that operating points can be found with sufficient range of good service. The final choice of the operating point is an administrative responsibility of the operating telephone company.

---

* These are the only relay actions required to release the network path. The other parts of the path will be used as needed without interference because of the differential excitation of the ferreed switch.[3,4]

The performance of this network is conveniently broken into two parts, that of the line concentrator by itself and that of the full network in its various uses.

4.1 *Line Concentrator Characteristics*

Fig. 13 shows a load-service curve for the concentrator based on simulation results. This simulation was applied to the concentrator alone; it consisted of repeated offerings of simulated calls to a concentrator modeled in a general-purpose digital computer. The data for Fig. 13 were collected for a concentrator with all lines assumed to have equal calling rates and usage, and are compared with data for a similar theoretical group of 40 lines with full access to 10 links. While this kind of curve is of interest for general evaluation, more concern is felt about the situations which will be found in the field, where equal line usage is the exception rather than the rule. In particular, concern is felt for situations where, through chance, several high-usage lines are assigned to the same switch. With purely random assignments this chance can be shown to be small — it can be made much smaller by adopting assignment practices which tend to spread lines known to be high-usage (such

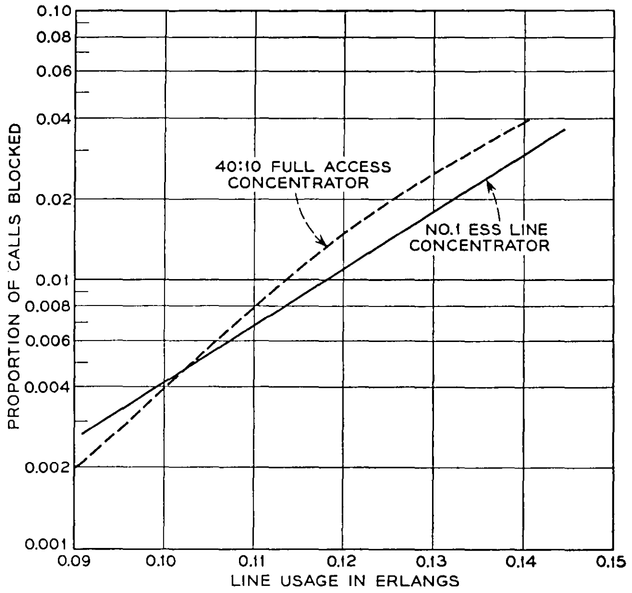

Fig. 13 — Load-service curve of 4:1 concentrator, determined by simulation, compared with theoretical load-service curve for full-access group of 40 lines on 10 links.

as PBX lines) over the concentrator switches. For further simulation, line usages were assigned at random from an exponential distribution. Fig. 14 shows the results of a typical run under these conditions. The average blocking (measured as the number of blocked attempts divided by the total number of attempts) is materially less than the blocking of Fig. 13. On the other hand, the 16 lines on the switch with the highest load experienced a slightly higher blocking.

The drop in average blocking with a wide spread of line usage can be explained as the double effect of the narrowing of the load variance accompanying a variation in source loads and a reserved path effect whereby a high calling rate line may place a new call over the path it has just abandoned before a call from another lower calling rate line can seize it. The average load within the groups of 16 lines is not as closely correlated to the service encountered by the group as might be expected. Closer examination of the groups indicates that the spread of line loads within the group itself is a strong factor. Allowing for the difficulty of predicting the exact performance of each concentrator, it appears safe to use the equal-usage curve of Fig. 13 as a basis for deriving engineering procedures.

In addition to the blocking of the concentrator, the delay given to those originating calls which are blocked is of prime importance. Because new trials are made through the rest of the network to find customer dial pulse receivers, the main network source of this delay is in the con-

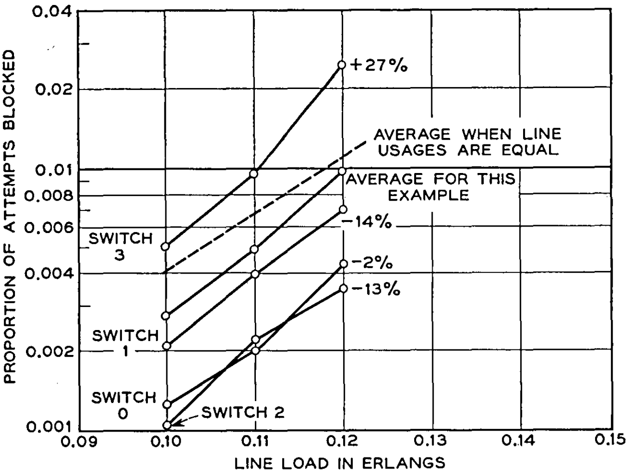

Fig. 14 — Example of effect of switch unbalance on 4:1 line concentrator.

centrator itself. At the completion of dialing, the path through the concentrator which was used for dialing is available for reuse on the ringing and talking connections. In order to evaluate the delay generated by the concentrator, the simulation program was modified to treat all calls as originating calls and to hold delayed calls until they were served. This made possible a direct comparison with the theoretical performance of a full-access group.[6] Fig. 15 shows the results of a simulation run with 0.15 erlang per line, which resulted in slightly over 0.04 of the calls being blocked. The distribution is shown only for the calls which were blocked and is compared to similar theoretical data with a full-access group of 40 lines reaching 10 links. In both cases it is apparent that these groups must be run normally at low losses because dial tone delays, when they occur from this cause, are long. The No. 1 ESS line concentrator with 6 crosspoints per line compares well with the full-access concentrator with 10 crosspoints per line.

The 2:1 concentrator has not been studied in as much detail as the 4:1 concentrator. Not only will it have much lower blocking at comparable link loads because of only second-stage concentration, but the smaller

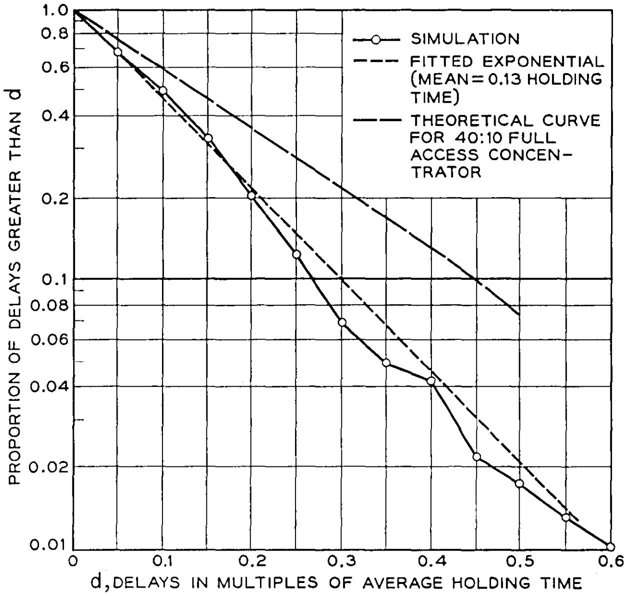

Fig. 15 — Delay distribution of blocked calls, determined by simulation at 0.15 erlang per line, compared with theoretical delay distribution for full-access group of 40 lines on 10 links.

number of lines will introduce a stronger limited-source effect. Under these conditions the network as a whole will be the main source of congestion, and loading of the 2:1 concentrator is not a serious factor.

Because of the delay characteristics of the concentrator, it is expected that the concentrator will be used at low blocking probabilities. If a point such as 0.10 occupancy of the lines is chosen, increases in load of 40 per cent are seen to produce a significant increase in blocking, but this is minor compared to what will happen in the rest of the switching network and interoffice trunks if such high traffic overload occurs.

Fig. 16 shows an estimate of the performance of the switching network (including blocking contributed by the line concentrators). Trunk networks and junctors terminating on trunk networks were assumed to be loaded 20 per cent above the line link networks. All of these data were based on NEASIM* simulations which in turn were verified by a small

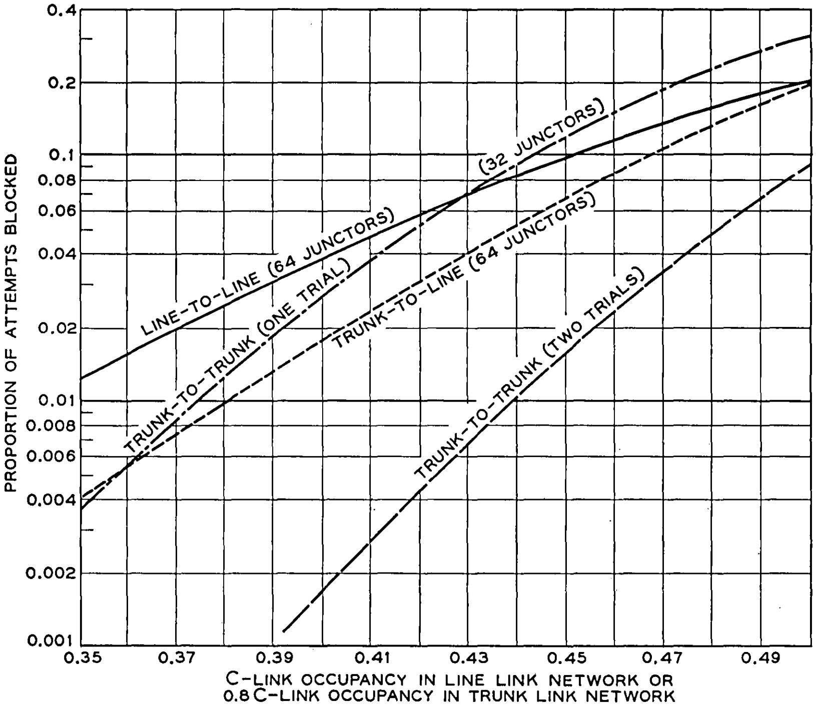

Fig. 16 — Load-service curves of switching network.

---

* NEASIM[7] is the name given to a computer program designed in Bell Telephone Laboratories. It uses a technique of simulating link states of a linear graph.

number of large simulations by digital computer, in which the network was fully represented. For a large network these full-scale simulations are expensive and generate little data not available by NEASIM techniques.

In actual practice, of course, varying numbers of junctors will be available between link networks; higher efficiencies are available with larger groups. In such cases, the line concentrator may well be the limiting item in loading line link networks of a small office and the intraoffice junctor group the limiting item in a large office. The latter limitation can be overcome by providing intraoffice trunks on the trunk link networks and letting them carry the traffic which overflows small groups of high-efficiency line-to-line junctors.

As with other networks in the past, it is to be expected that initial installations of the network will be over-provided with switches to insure good service until operating experience gives additional data for more precise traffic engineering. Should either the estimates of office traffic or the estimates of service characteristics be significantly in error, the flexibility of junctor assignments and the ability to change the concentration ratio of the link networks offer insurance that efficient operating points can be found.

V. ACKNOWLEDGMENTS

Mr. R. F. Grantges proposed the NEASIM program, which has been of great importance in evaluating network patterns. He has also made frequent contributions to the network plan. Many others have also contributed, in particular, T. N. Lowry, J. G. Kappel, W. C. Jones, C. Klingman and R. A. Rosenthal.

APPENDIX

Definition of Terms

Switching network — that part of a switching system that establishes transmission paths between pairs of terminals.

Space division (separation) switching network — a switching network in which the transmission paths are physically distinct.

Crosspoint — a two-state switching device, possessing a low transmission impedance in one state and a very high one in the other.

Switch — a rectangular array of crosspoints in which one side of the crosspoints is multiplied in rows and the other in columns.

Stage — those switches in a switching network which have identical, parallel functions.

Grid — a two-stage switching network in which a single path exists between every first-stage switch to every second-stage switch. The number of outputs in each first stage must equal the number of second-stage switches; the number of inputs in each second-stage switch must equal the number of first-stage switches.

Link — the connection between terminals on one switch and terminals on a switch in the next stage corresponding to a single transmission path.

Junctor — any link between central stages of the network.

Concentration — the function usually associated with the first stages of a switching network and characterized by configurations possessing fewer output than input terminals; provided to improve network efficiency when the input terminals carry a light traffic load.

Expansion — the inverse of concentration.

Access — a term indicative of existence of paths within a network configuration from an input terminal to a set of output terminals in absence of traffic; partial access refers to the ability of reaching only a fraction of the output terminals; full access permits reaching all terminals by unique paths; multiple access allows reaching all output terminals in more than one way.

Graph — a graphical representation of all possible paths between two network terminals.

Blocking — inability to interconnect two idle network terminals because some of the applicable links are used for other connections.

Erlang — the traffic unit corresponding to an average of one call present on a traffic carrying facility.

Occupancy — average proportion of time that a traffic carrying facility is busy.

REFERENCES

1. Ferguson, J. G., Grutzner, W. E., Koehler, D. C., Skinner, R. S., Skubiak, M. T., and Wetherell, D. H., No. 1 ESS Apparatus and Equipment, B.S.T.J., this issue, p. 2355.
2. Danielson, D., Dunlap, K. S., and Hofmann, H. R., No. 1 ESS Switching Frames and Circuits, B.S.T.J., this issue, p. 2221.
3. Feiner, A., Lovell, C. A., Lowry, T. N., and Ridinger, P. G., The Ferreed — A New Switching Device, B.S.T.J., **39**, Jan., 1960, p. 1.
4. Feiner, A., The Ferreed, B.S.T.J., **43**, Jan., 1964, p. 1.
5. Joel, A. E., Jr., An Experimental Switching System Using New Electronic Techniques, B.S.T.J., **37**, Sept., 1958, p. 1091.
6. Descloux, A., *Delay Tables for Finite- and Infinite-Source Systems*, McGraw-Hill, New York, 1962.
7. Grantges, R. F., and Sinowitz, N. R., NEASIM: A General-Purpose Computer Simulation Program for Load-Loss Analysis of Multistage Central Office Switching Networks, B.S.T.J., **43**, May, 1964, p. 965.

No. 1 ESS Switching Network Frames and Circuits

By D. DANIELSEN, K. S. DUNLAP and H. R. HOFMANN

(Manuscript received January 10, 1964)

The switching network of No. 1 ESS is a space-separated network employing ferreed switches. The switches are organized into a few basic building blocks or frames from which all network configurations are realized. The frames are autonomous in operation and demonstrate the peripheral bus concept employed in No. 1 ESS.

The presence of the high-speed digital processing center in the central office has had a marked effect upon the circuits of the switching network. Path hunting has become a central control task, which has freed the network of its traditional path memory functions.

A combination of electronic and electromechanical devices is used to control the ferreed switches. Control duplication assures reliability.

I. INTRODUCTION

The switching network is a major functional unit in a telephone central office, representing in many cases 50 per cent or more of the equipment in the office. The choice of apparatus and general circuit design is highly influenced by the search for the optimum balance between cost, reliability, and maintainability.

The switching network serves the function of interconnecting the many lines and trunks served by the telephone office. In addition, the network interconnects the lines and trunks with the many service circuits and tone sources, such as signal transmitters, signal receivers, party test circuits, coin supervisory circuit, ringing circuit, etc.

A second function of the network is to match the traffic between a large number of lightly used lines and a much smaller number of heavily used trunks, maintaining a satisfactorily low probability of blocking.

These basic functions are performed in an operating environment that slowly changes over the life of the office. Not only can the number of lines and trunks served by the office change, but the occupancy or offered traffic per line can change, the call-routing patterns within the office can change, and the types of facilities to be interconnected can change. The network, in order to meet the requirements of an office at any time and to match the requirements of initial offices that cover a broad range of sizes and traffic characteristics, must be capable of very flexible interconnecting patterns. This can be facilitated by the use of a minimum number of basic network building blocks whose sizes are tailored to acceptable growth or change patterns and which are then interconnected in series-parallel arrangements to form the complete office network.

A further requirement of a general-purpose network is that it be compatible with present outside plant and not be too restrictive on the future development of that plant. The ideal in this regard is a network that does not reflect its requirements on the outside plant. One method of achieving this is to have a network that is transparent to a wide range of transmission and service signals, passing a wide frequency band and tolerating large signal amplitudes. Also, the network should present a noise-free interconnecting path.

The new element in network design considerations is the presence of a high-speed digital data processing center containing bulk memories. The presence of this processing center permits network designs that are faster acting, less expensive, more flexible and more easily maintained than former network designs. Certain functions formerly delegated to the network have been transferred to central control. Chief among these are the link busy-idle record and the calls-in-progress record. These changes make path hunting a central control task that can be integrated into normal call processing and can be done in microseconds instead of at a much slower rate as a network task. In addition, access requirements into the network are lessened and crosspoint costs are lowered. The change is also beneficial from the operational standpoint: network paths can be reserved and links can be made busy for call routing and for network diagnostic purposes without network equipment action.

The invention of the ferreed switch during the electronic switching development program made it possible for the switching network to be highly compatible both with existing outside plant and with the digital processing equipment. In addition, since the ferreed switches could be packaged in units of almost any size without undue equipment or electrical circuit restrictions, the sizes of the network building blocks could be determined directly by traffic and office growth considerations.

II. NETWORK FRAMES

With each new switching system, a number of new terms are adopted to fit its internal organization and its new type of switching apparatus.

The two largest functional groups in the No. 1 ESS network are the line link network (LLN) and the trunk link network (TLN). Figs. 1 and 2 show these two link networks and indicate the link wiring pattern. The same two figures show the breakdown of the link networks into frames, concentrators, grids and ferreed switches.*

A connection through the network consists of several path segments; each path segment is controlled by a separate network frame (see Fig. 3). Although a No. 1 ESS office network may have 300 or more network frames, these are of just three basic types.[1] They are the line switching frame, the junctor switching frame and the trunk switching frame. These frames are independent functional units and are highly autonomous in their operation. They receive all operating instructions in coded form over a peripheral bus[2] system directly from central control and return information to it at the completion of their operating cycles.

The interconnection of the frames to form functional groups and the further interconnection of these groups to form complete networks are treated elsewhere in this issue.[3] This article examines the three types of network frames, including descriptions of the network fabric in each frame, path selection within the network fabric, and the processing of frame input information to achieve a desired action.

III. LINE SWITCHING FRAMES

3.1 *Frames*

The line switching frames perform the first two stages of switching in the interconnecting process: connecting lines on their inputs to B links on their outputs. The line switching frames also perform the second of the two basic network functions, namely, traffic concentration.

To cover the range of No. 1 ESS offices, two designs of line switch frame are provided. One concentrates traffic by a ratio of 4-to-1 between input lines and B links and the second concentrates traffic by a ratio of 2-to-1. In any office, however, only one of the two types of frame is used.

The 4-to-1 line switching frame contains 16 line concentrators, each of which interconnects 64 lines to 16 B links through two stages of

---

* See Ref. 3 for a definition of all terms.

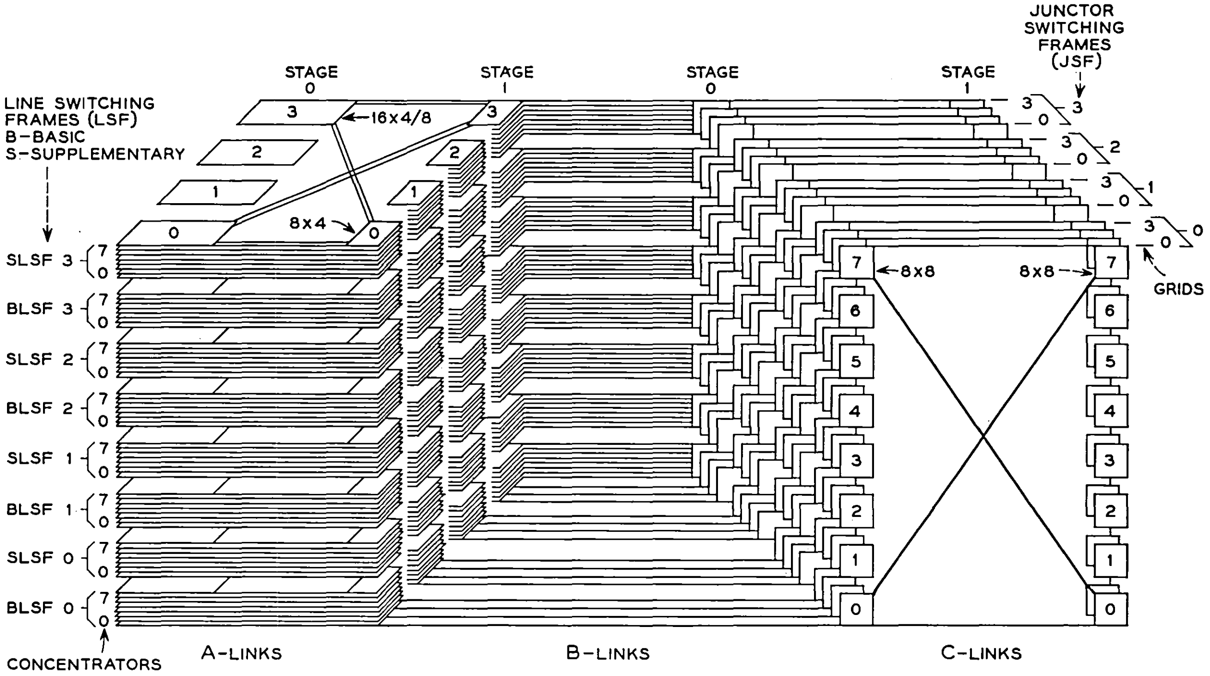

Fig. 1 — Wiring pattern for line link network with 4:1 concentration ratio.

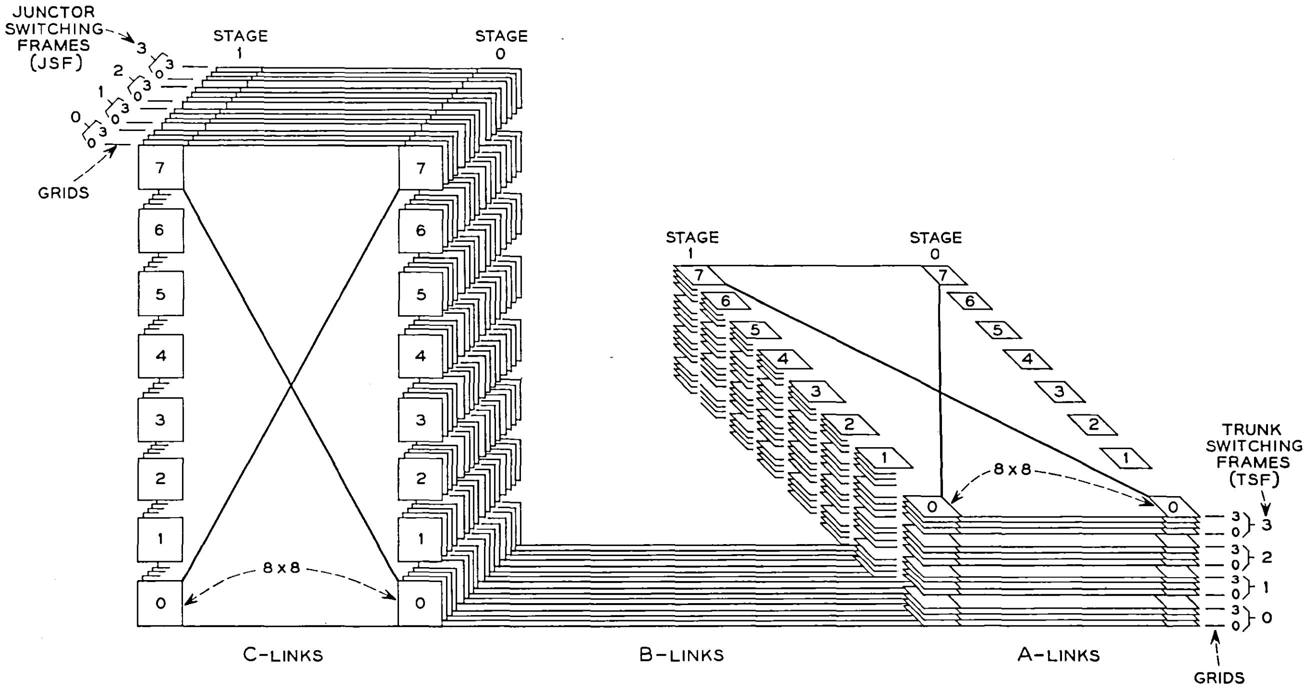

Fig. 2 — Typical wiring pattern for trunk link network with 1:1 concentration ratio.

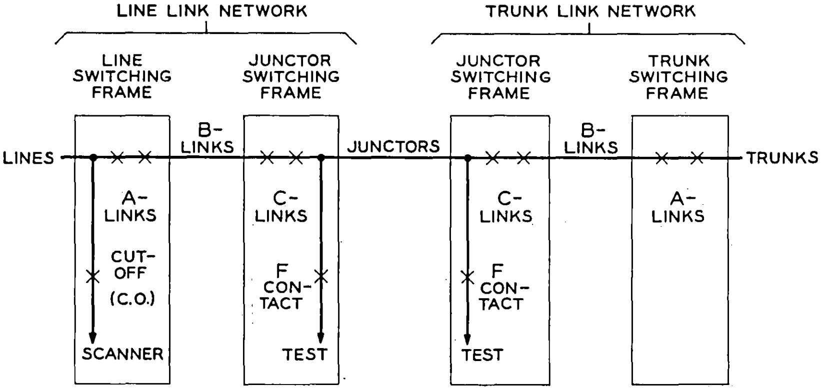

Fig. 3 — Network connections.

switching. The complete frame thus terminates 1,024 lines on its input and 256 B links on its output. For growth purposes, the frame can be separated mechanically into two halves, each containing eight concentrators. The basic half, however, contains all the controlling circuitry needed to control both the basic and supplementary halves. Only one line switch frame in an office would normally operate as a half frame. This half-frame operation provides line growth in steps of 512 lines. The 2-to-1 line switching frame contains 16 line concentrators, each of which interconnects 32 lines to 16 B links through two stages of switching. The frame thus terminates 512 lines on its input and 256 B links on its output. The frame is always supplied as a complete unit.

3.2 *Concentrators and Switches*

The 16 concentrators on a line switching frame are identical. A block diagram of a 4-to-1 concentrator is shown in Fig. 4. The 64 lines are assigned to four input or stage 0 switches, and the 16 output or B links are assigned to four stage 1 switches. The wiring between stages, called "A links," permits each input terminal to have access to each output terminal over a single path defined by a particular A link. Each of the 16 inputs on a stage 0 switch has access to only four of the eight outputs of the switch. The four outputs, however, in every case form a set that is wired one each to the four switches in stage 1. Thus full access of B-link outputs is achieved with a minimum crosspoint count per line.

Each input terminal also connects to a pair of contacts that give the line access to the line scanner for service request indication. These cut-

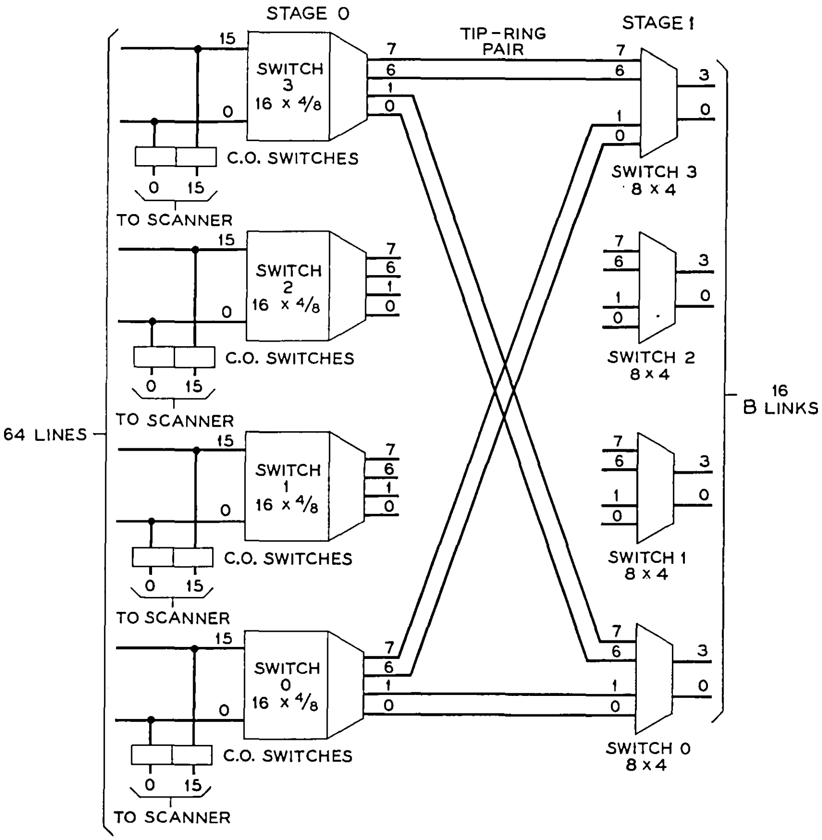

Fig. 4 — Line switching frame: tip-ring block diagram of a 4:1 concentrator.

off ferreed switches, bipolar in operation, are controlled by the line switch frame control equipment.

A block diagram of a 2-to-1 concentrator is shown in Fig. 5. This concentrator differs from the 4-to-1 concentrator only in the stage 0 switch. The 32 input lines are assigned to eight 4 × 4 switches. Full access to the B links is achieved with traffic concentration limited entirely to the stage 1 switches.

IV. TRUNK AND JUNCTOR SWITCHING FRAMES

4.1 *Frames*

The trunk switching frames perform two stages of switching in the interconnecting process, connecting trunks and service circuits on their

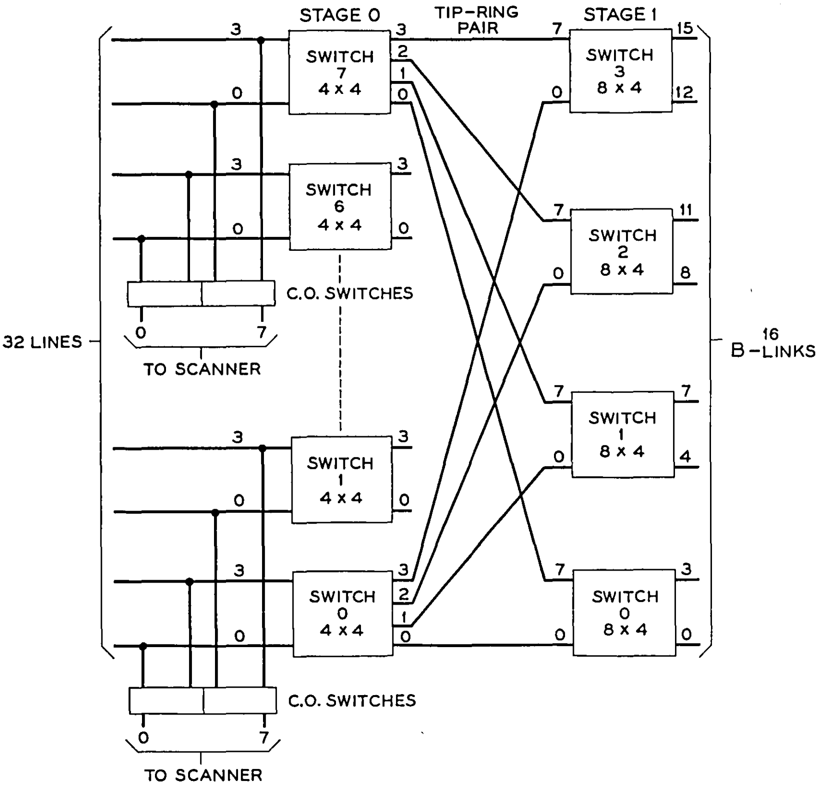

Fig. 5 — Line switching frame: tip-ring block diagram of a 2:1 concentrator.

inputs with B links on outputs. The junctor switching frames perform two stages of switching, interconnecting B links and junctors, the latter being the central link of every network connection. Both these interconnecting links are completely internal to the network connection.

Both types of frames contain four octal grids, each of which interconnects 64 inputs to 64 outputs through two stages of switching. The complete frames are always provided. This provides growth steps of 256 trunks and 256 junctors.

The junctors switching frame, in addition to the above switching grids, contains a pair of contacts per junctor that give the junctor access to a common test vertical. The test vertical ferreed switches, bipolar in operation, are controlled by the junctor switching frame control equipment.

4.2 *Octal Grids and Switches*

An octal grid with test vertical access is shown in Fig. 6. The 64 inputs are assigned to eight input or stage 0 switches, and the 64 outputs are assigned to eight stage 1 switches. The interstage wiring connects each input switch to each of the eight output switches. Each input terminal thus has access to each of the 64 output terminals through a single path defined by a particular link between switches.

V. PATH SELECTION

For path selection purposes, the ferreed switches within each frame are divided into two equal groups, and independent path selection

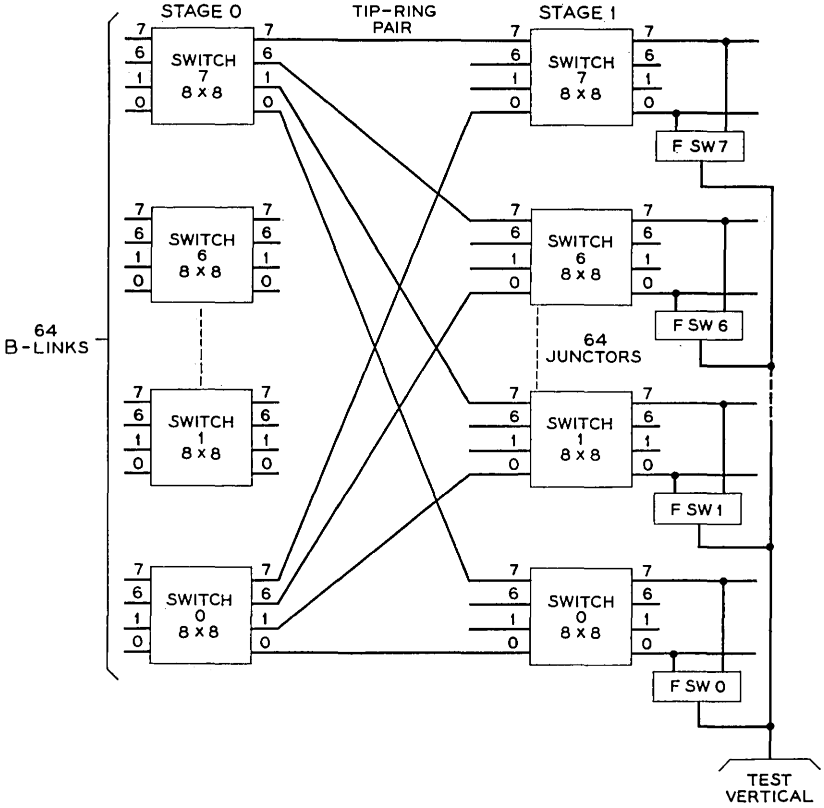

Fig. 6 — Junctor switching frame: tip-ring block diagram of a grid with test vertical access.

facilities are provided for each group. Two simultaneous paths can therefore be established per frame, one per switch group.

The magnetically latched ferreed crosspoints[4,5] are wired into coordinate arrays to form 8 × 8, 8 × 4, 4 × 4 and partial-access 16 × 8 switches.

The control windings are series connected along the rows and columns of the switch. One end of the control windings of all rows and columns is connected to a common multiple within the switch. By pulsing one row and one column via the common multiple, the crosspoint at the intersection is closed. At the same time, any crosspoints previously closed along the pulsed row or column are released. This operating method eliminates the need for specific release operations on the crosspoint. Crosspoints are released as a direct result of the operation of other crosspoints.

In all frames, the control winding interconnection pattern between switches on a frame parallels exactly the interconnection pattern of the tip-ring conductors on the frame.

The closure of a tip-ring transmission path between specific pairs of input and output terminals requires the momentary selective closure and high-current pulsing of the control winding path between these terminals. The pulse path is selected by means of 24-contact wire spring relays. Relay contacts are inserted in the control winding paths of every input, intermediate and output link. Other contacts steer the pulse to general switch groups and control the polarity of the pulse for special purposes. One contact per relay is used for test purposes.

In the junctor and trunk switching frames, the path selecting groups internal to the grid are four groups of eight wire spring relays each. The four relay groups define respectively the input level, the input switch, the output level and the output switch. This is shown in Figs. 7 and 8. The operation of one relay in each group defines a unique pulse path through the grid. Other contacts on these same relays are inserted into the links of the second grid of the selection pair. The function of the relay groups, however, is not always preserved in crossing between grids. This allows the maximum usage of the 24 contacts on each relay.

Within the grid, input switch selection has been made in the intermediate switch links. This performs the added function of disjoining the internal link multiple that results from the control winding multiple within this switch.

In the junctor switching frame, additional contacts are used within the grid to select the bipolar test vertical access ferreed F as shown in Fig. 8. This requires the use of additional contacts on the relay groups

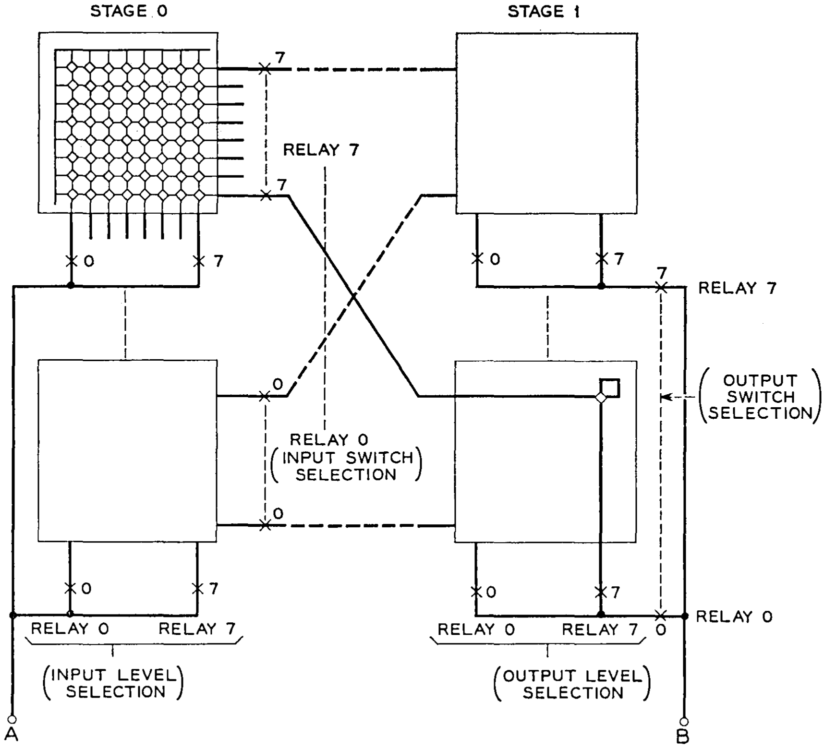

Fig. 7 — Trunk switching frame: path selection within a grid.

that select the output switch and output level. The grid with test vertical access has three possible pulsing points: A, B, and C. By pulsing between terminals A and C with one polarity, the two crosspoints in the grid and the F contact are closed. By reversing the pulse direction between these two points, the two crosspoints in the grid are closed and the F contact is opened. By connecting the pulser between terminals B and C in either of the two polarities, the F contact can be opened or closed without pulsing the transmission crosspoints. Similarly, by pulsing between terminals A and B, the transmission crosspoints can be operated without changing the state of the test vertical access ferreed.

External to the grid, the pulse is steered by means of additional wire spring relay groups as shown in Fig. 9. The first selection group steers the pulse to its normal pair of grids or the grids of the alternative half of the frame. The next relay group, the order group, controls the

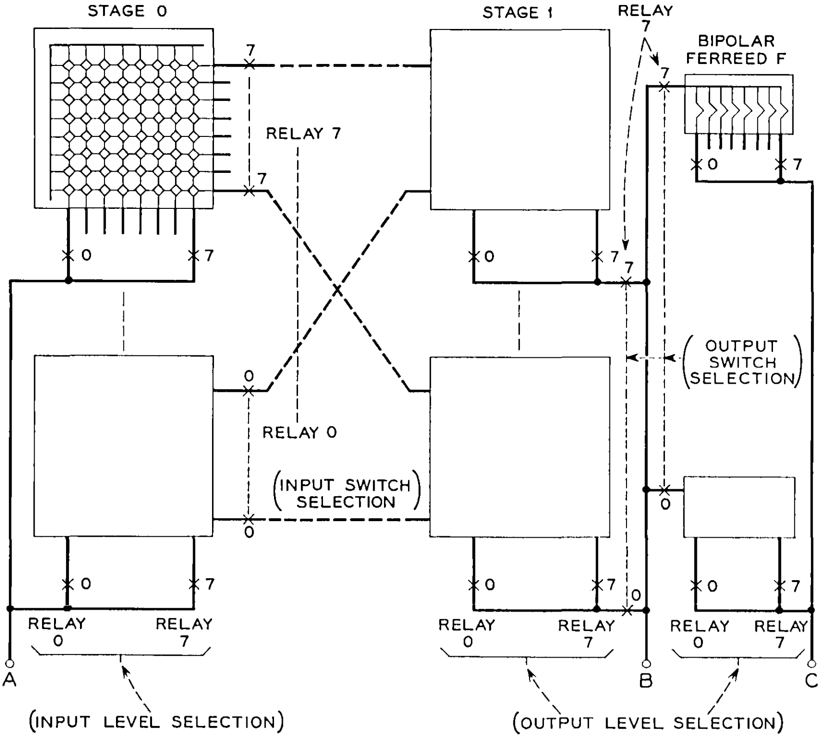

Fig. 8 — Junctor switching frame: path selection in a grid with test vertical access.

grid pulse points and pulse polarity. The third relay group controls the grid selection.

Path selection in the 4:1 concentration ratio line switching frame follows the same general pattern as in the junctor and trunk switching frames. The eight concentrators on the basic frame form one path selection group, and the eight concentrators on the supplementary frame form the second selection group. Within a concentrator, three relay groups perform path selection. These relay groups consist of 16 relays each. As shown in Fig. 10, one group defines the 16 input levels per input switch, the second, the 16 output levels per concentrator, and the third is a make-up group. This group is not too closely defined by equipment layout but essentially chooses input half-switches for a pair of concentrators.

Path selection in the 2:1 concentration ratio line switching frame is similar to the 4:1 concentration ratio line switching frame. Three relay

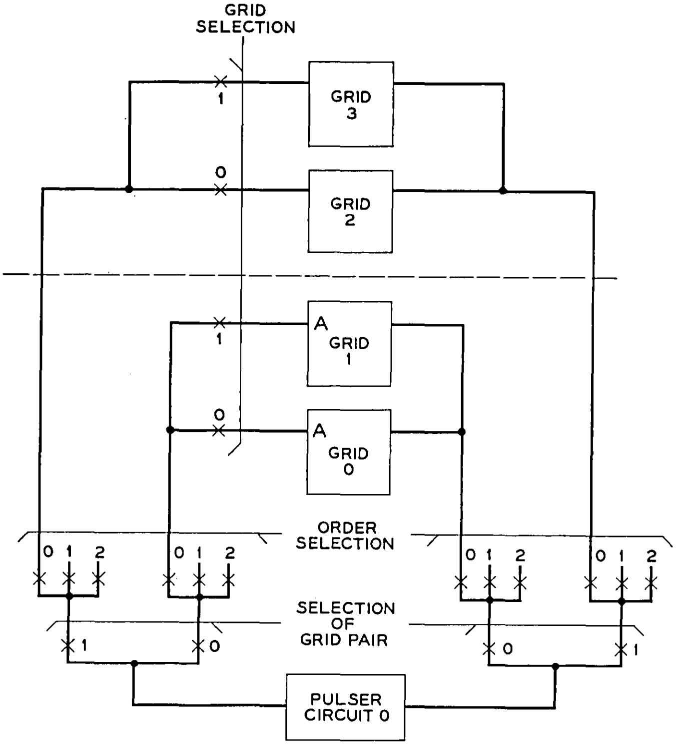

Fig. 9 — Path selection external to grids.

groups of 16 relays each are used for input level, input switch and output level selection as shown in Fig. 11.

In the 4:1 concentration ratio line switching frame selection plan, maximum use has been made of changing the functions of the relay groups among concentrators. In most cases, this has permitted 20 of the 24 contacts per relay to be used for path selection purposes.

External to the concentrator, additional selection groups steer the pulser to the appropriate concentrator. Another group, the order group, is a six-relay group. As can be seen from Figs. 10 and 11, there are three possible pulsing points into a concentrator: A, B, and C. A bipolar ferreed switch (cutoff) is used for the scanner access contact. In a manner similar to the junctor switching frame, the order relays, by controlling the polarity of the pulsing and the point of application, perform the following types of orders:

(a) close stage 0 and stage 1 crosspoints with the cutoff contact either opened or closed,

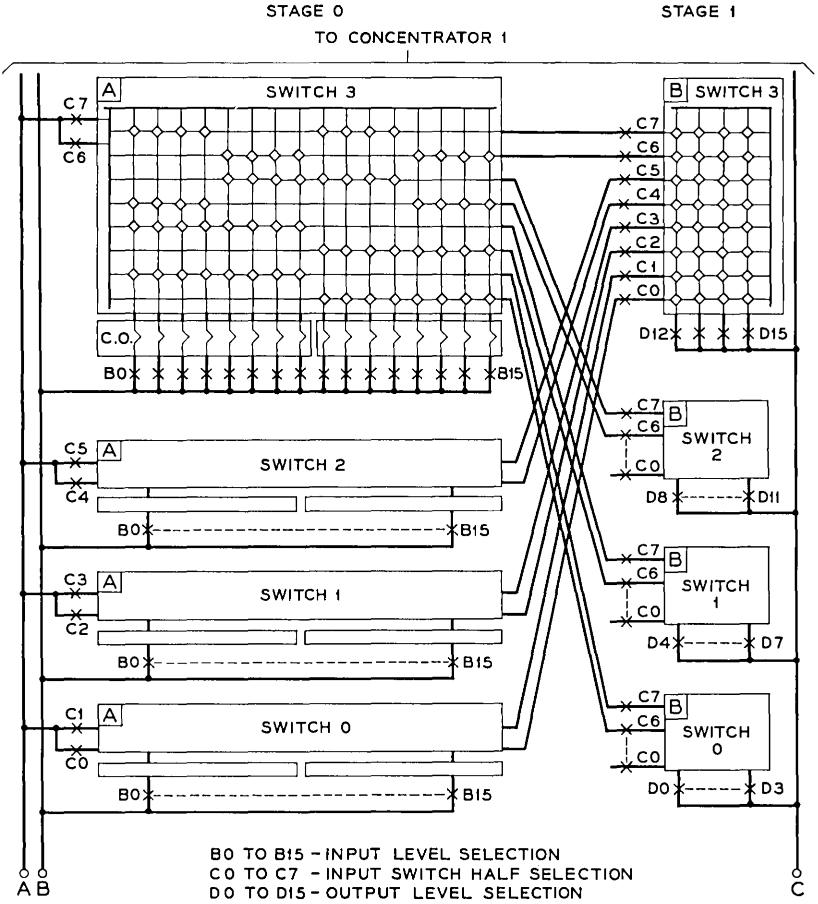

Fig. 10 — Line switching frame: path selection within a 4:1 concentrator.

(b) open stage 0 crosspoint with the cutoff contact either opened or closed, or

(c) open stage 0 and close stage 1 crosspoints with no change in cutoff contacts.

VI. INFORMATION PROCESSING

6.1 *Introduction*

The different types of network frames differ mainly in the internal organization of the network fabric. This results in differences in the

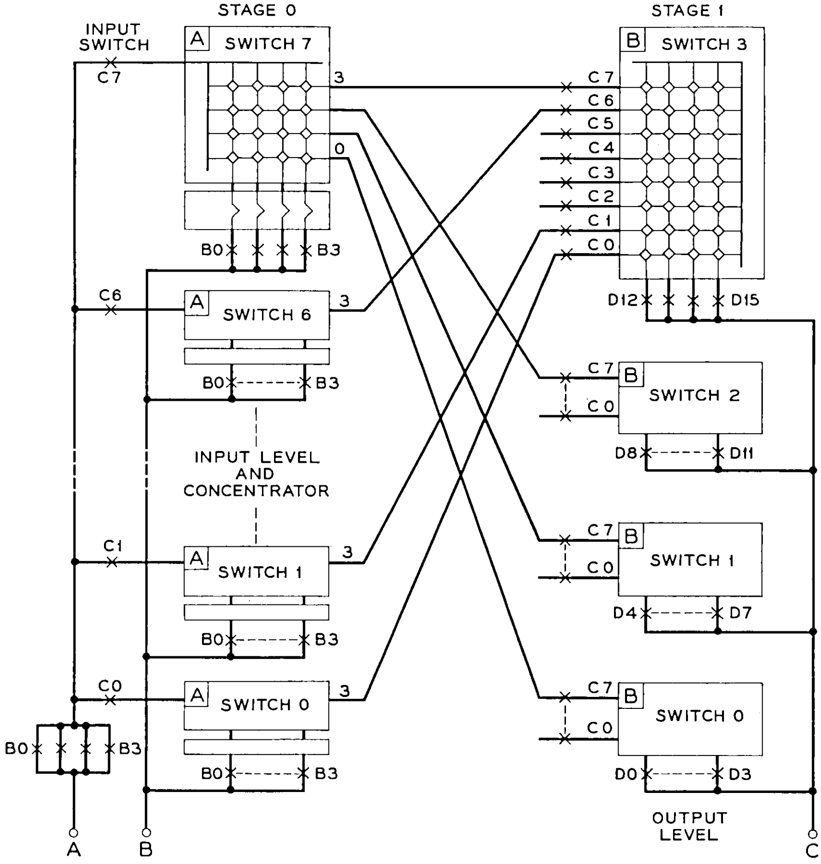

Fig. 11 — Line switching frame: path selection within a 2:1 concentrator.

information processing section of the frame, but these differences are minor. The same type of apparatus and circuit configuration is used in all types of network frames.

Reliability is achieved by means of duplication and redundancy. Duplication is achieved by providing two groups of circuits, each of which is capable of controlling the network fabric. Each of these circuit groups is assigned to control one-half of the frame fabric. Both circuit groups are functionally independent and under normal operating conditions may execute instructions simultaneously. Both circuit groups are normally active.

It is of prime concern that the probability of losing control of any portion of the network fabric be as small as possible. Therefore sufficient circuit redundancy has been provided in each of the two major circuit groups that either of the two circuits can control all of the frame fabric. This provides standby facilities for controlling any part of the frame fabric.

The functional organization of a network frame is shown in Fig. 12. The cycle time of a network frame is 20 milliseconds. This time is measured from the instant an enable signal and peripheral bus addressing information are received and continues until the time the frame has executed this information and is prepared for a new instruction. With two active circuit groups in each frame, a network frame may establish new connections at a maximum rate of 100 new connections per second.

The high speed of the peripheral bus system in conjunction with the relatively slow-acting network frame requires that the bus information be stored in the network frame for a large portion of the frame operating cycle. The peripheral bus information, which is stored in a buffer register, is translated and checked. The checking circuitry determines if the state of the translator is valid or not. A nonvalid combination of bits on

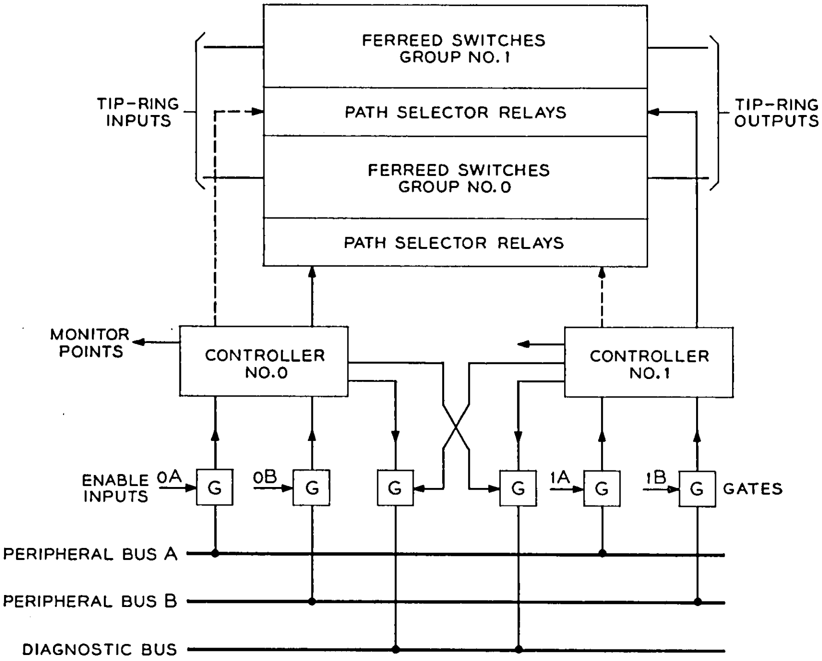

Fig. 12 — Functional organization of a network frame.

the peripheral bus or some malfunctioning of the buffer register or translator will cause the frame circuitry to stop processing the information. These checks will provide some assurance that erroneous action cannot be performed in the frame network fabric.

Each of the two major circuit groups in a frame has three monitor points which connect directly to the central control. These inform the central control about the status of the network control circuit at any time.

6.2 *The Peripheral Bus*

The peripheral bus consists basically of two 38-pair 26-gauge switchboard cables. These two cables are referred to as the 0 and 1 peripheral buses and interconnect the central control and all network frames. Each wire pair of both buses is assigned a bit position number ranging from zero to 37. A bit is said to be present in a position whenever an 80-milliampere, 0.5-microsecond current pulse occurs in that wire pair.

Each network frame expects bits to be present simultaneously in certain combinations on 36 of the bus bit positions. The format of the 36-bit binary word has been selected in such a manner that only a very simple translation has to be performed in the network frames. Bit positions 0 to 29 are used to identify a particular path. In the junctor and trunk switching frames, there are as many as 16,384 possible paths defined by these 30 bits. The grouping of these bits in several one-out-of-four and one-out-of-two subgroups is shown in Table I. Similarly, the line switching frame interprets the peripheral bus bits in several groups of one out of four and one out of two, as shown in Tables II and III. The peripheral bus information does not contain any check bits. The network frame circuitry contains facilities for checking the validity of the bus information. Each type of network frame expects a fixed number of bits to be present and checks that these appear in positions that satisfy the format for that type of frame.

Bits in positions 0 to 29 identify a path in a network frame. Bits in positions 30 to 35 inform the circuitry what kind of action should be performed on the selected path.

This multiple one-out-of-*n* grouping of the peripheral bus bit positions does require that the central control perform an elaborate translation of its internal binary information. This inconvenience and cost in the central control becomes relatively insignificant when one considers the simplicity of translation and checking that can be employed in each network frame. Bit position 36, referred to as the "reset signal," does

TABLE I—JUNCTOR SWITCHING FRAME: ASSOCIATION BETWEEN PERIPHERAL BUS BIT POSITIONS AND FRAME FUNCTIONS

			Function Selection		Grid Selection		Selection of Path within a Grid							
			1/2	1/4	1/2	1/2	1/2	1/4	1/2	1/4	1/2	1/4	1/2	1/4
Bit. Pos.	37	36	35 34	33 32 31 30	29 28	27 26	25 24	15 14 13 12	21 20	11 10 9 8	19 18	7 6 5 4	17 16	3 2 1 0
Grid			Order Group (see below for orders)		Group No. 6	Group No. 5	Relay Group No. 4		Relay Group No. 3		Relay Group No. 2		Relay Group No. 1	
0	FCG	reset			grid 0	grid 0	output switch		input switch		output level		input level	
1					& 1	or 1	output level		input switch		output switch		input level	
2					or 2	grid 2	output switch		input switch		output level		input level	
3					& 3	or 3	output level		input switch		output switch		input level	

Order No.	Designation	Function
0	remove NT, FCG, or verify	releases F contact and removes all connections to the test vertical
1	connect	closes 0 and 1 crosspoints and releases associated F contact
2	connect with FCG	closes stage 0 and 1 crosspoints and operates the associated F contact; connects FCG test circuit to the test vertical
3	test order	changes mode of operation of frame; does not change the state of any crosspoints
4	not used	
5	connect verify (LS)	operates an F contact and connects a resistor across the tip and ring of the test vertical
6	operate NT	operates an F contact and makes the test vertical available to external test circuits
7	connect verify (GS)	operates an F contact and connects a resistor between the ring conductor of the test vertical and ground

TABLE II—4:1 LINE SWITCHING FRAME: ASSOCIATION BETWEEN PERIPHERAL BUS BIT POSITIONS AND FRAME FUNCTIONS

	Line Switching Frame Contact Assignments										
	1/2	1/4	1/2	1/4	1/4	1/4	1/4	1/4	1/4	1/4
Bit Pos.	35 34	33 32 31 30	29 28	27 26 25 24	23 22 21 20	19 18 17 16	15 14 13 12	11 10 9 8	7 6 5 4	3 2 1 0
Conc.	Order Group Relays			Gp. 4 Relays	Group 3 Relays		Group 2 Relays		Group 1 Relays	
0	0 not used		basic or supplementary	concentrator selector	input switch half		output level		input level	
1	1 connect* (close 0 and 1 open C.O.)				input switch half		output level		input level	
2	2 FCG (open 0, close 1 no change on C.O.)				input switch half		output level		input level	
3	3 test order				input switch half		output level		input level	
4	4 hi and dry (open 0 open C.O.)				input switch half		input level		output level	
5	5 connect test (close 0, close 1 close C.O.)				input switch half		input level		output level	
6	6 not used				input switch half		input level		output level	
7	7 restore C.O. (open 0, close C.O.)				input switch half		input level		output level	

* For "close 0 and 1, open C.O." read "close crosspoints in stage 0 and stage 1, open scanner cutoff ferreed."

TABLE III — 2:1 LINE SWITCHING FRAME: ASSOCIATION BETWEEN PERIPHERAL BUS BIT POSITIONS AND FRAME FUNCTIONS

	Line Switching Frame Contact Assignments (2:1 Ratio)				
	1/2: 35, 34 1/4: 33, 32, 31, 30		1/4: 23, 22, 21, 20 1/4: 19, 18, 17, 16	1/4: 15, 14, 13, 12 1/4: 11, 10, 9, 8	1/4: 7, 6, 5, 4 1/4: 3, 2, 1, 0
	Bit Pos.	29, 28			
Conc.	Order Group Relays		Group 3 Relays	Group 2 Relays	Group 1 Relays
0 or 8	0 not used 1 connect* (close 0 and 1, open C.O.) 2 FCG (open 0, close 1 no change on C.O.) 3 test order 4 hi and dry (open 0, open C.O.) 5 connect, test (close 0, close 1, close C.O.) 6 not used 7 restore C.O. (open 0, close C.O.)	conc. 0–7 or conc. 8–12	output level	input switch	input level and conc.
1 or 9					
2 or 10					
3 or 11					
4 or 12					
5 or 13					
6 or 14					
7 or 15					

* For "close 0 and 1, open C.O." read "close crosspoints in stages 0 and 1, open scanner cutoff ferreed."

not appear on the peripheral bus with any regularity. The use of this signal is mainly for the purpose of resetting network frames that may have been unsuccessful in executing their instructions, although it may be used for the purpose of generating an early timeout in any frame. Bit 37, also referred to as an "FCG" (false cross and ground) signal, is used only by the junctor switching frame. This signal appears at regular intervals on the peripheral bus. The signal is present at a different time than information bits 0 to 35. A certain time relationship does exist between this signal and the information bits. In the junctor switching frame, this signal is used as a time reference signal or clock.

Since the combination of bits present on either of the peripheral buses will appear in all network frames, all associated cable receivers will respond in all frames. This by itself will not cause any action in any of the frames. A further selection must be made as to which frame should respond. This selection of frame is accomplished by special signals called "enable signals." Each circuit has, in addition to its peripheral bus connections, connections to the central control via the central pulse distributor[6] for this purpose. Since the network frame circuitry and the peripheral bus are both duplicated, four such enable signals per frame are possible, any one of which may be used to select one of the four possible access patterns. The presence of an enable signal indicates directly which of the four possible combinations of bus and circuit shall be used. The network circuitry will return to central control an opposite-polarity enable verify over the same pair of wires which carried the enable signal. The presence of this signal acknowledges the receipt of the enable and indicates that the frame circuitry has responded properly.

6.3 *Buffer Register*

The central control is capable of transmitting information data on the peripheral bus at a rate of one complete instruction every 11 microseconds. Each network frame requires 20 milliseconds to complete an instruction. Therefore it is necessary that the network frames record the bus information for the length of time necessary to execute the instruction. The bus information is stored in buffer register flip-flops. The flip-flop circuit, illustrated in Fig. 13, is set when transistor Q_2 is on. The output of this circuit is capable of sinking 100 ma. There is one set of registers associated with each of the two groups of controlling circuitry. Each of the two sets of registers in a frame has one such bistable circuit per bit position. Each flip-flop may be set from either of the two buses over separate connections. Two of the three primary windings provide for the separate bus connections. A positive register

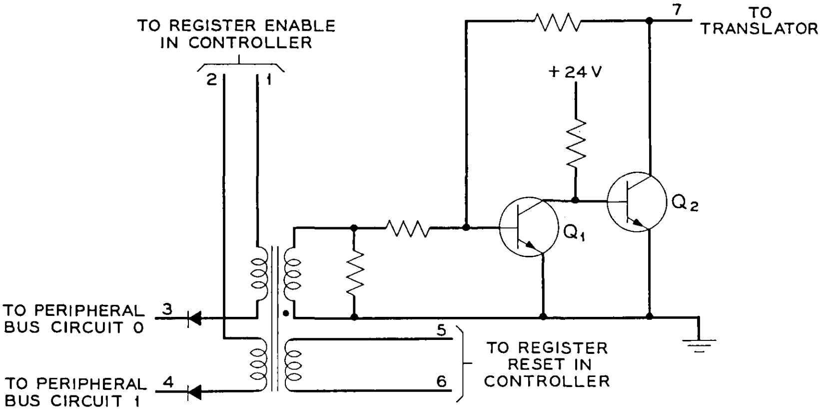

Fig. 13 — Buffer register flip-flop.

enable pulse generated by the network circuitry will appear either on terminal 1 or on terminal 2 and will provide the set current for each register flip-flop. The presence of an address bit, a negative pulse on either terminal 3 or 4, will terminate one of the two primary windings. A third winding provides means for resetting the flip-flops.

6.4 *Translator*

The principle employed in translating the multiple one-out-of-n peripheral bus information is the same in all types of network frames. The line switching frames translate the bus information into multiple one-out-of-sixteen selections, while both the trunk and the junctor switching frames translate the information into several one-out-of-eight selections. In the line switching frames, pairs of one-out-of-four bus information are translated to one-out-of-sixteen selections. The circuits of the one-out-of-sixteen and one-out-of-eight translators are shown in Figs. 14 and 15. They consist of 311-type reed relays which

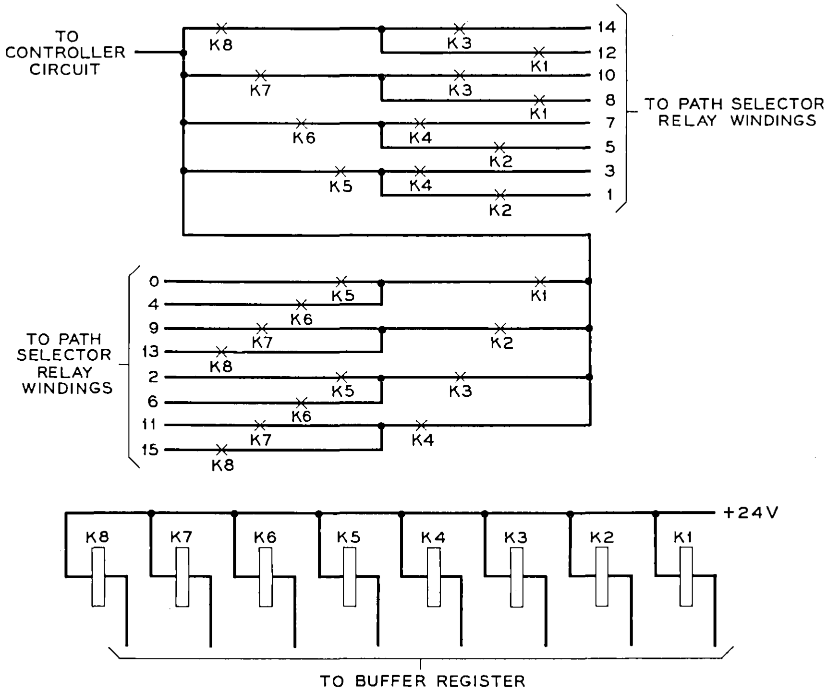

Fig. 14 — 1:16 translator circuit.

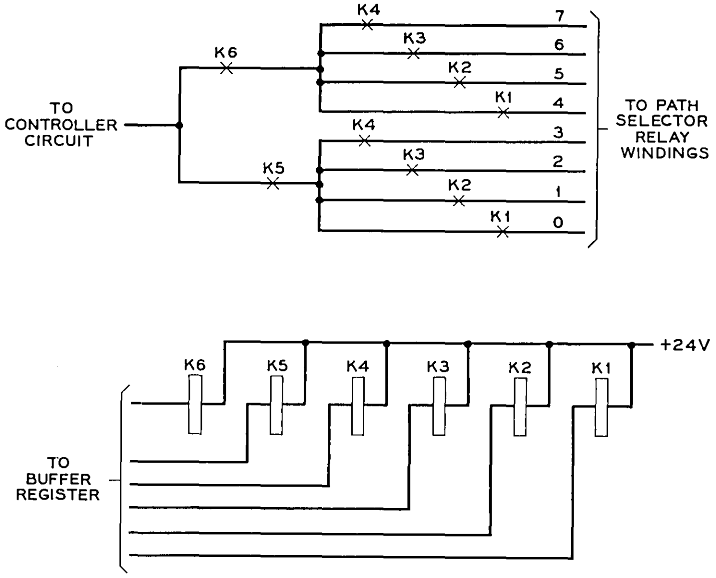

Fig. 15 — 1:18 translator circuit.

are operated directly by the register flip-flops. A fixed wiring pattern of the reed contacts results in the selection of a particular metallic path in each translator group. This metallic path is part of the operate path of a wire spring relay which is used in the ferreed pulse path selection. These relays are grouped and organized to correspond to the several groups of translators. A network frame contains two of each of all functional groups such as registers and translators. Each group of circuits is, under normal operating conditions, strictly associated with the control of one-half of the network fabric in that frame. An alternative access path between the two groups of circuits is provided by redundancy in the translators. Each buffer register circuit operates two reed relays in parallel, and two identical but separate metallic paths are established through each translator group. The selection of either of the two halves of the translator group determines if a circuit is to control its normal half or operate into the alternative path.

The path through a translator establishes continuity between an input terminal and the winding of a wire spring relay. The wire spring relay operate path is completed when cut-through occurs. At the time of cut-through, one path should exist through each translator group.

6.5 *Group Check Circuit*

Each network frame checks the validity of the peripheral bus information. This check is based upon the one-out-of-*n* grouping of the peripheral bus bit positions and the conversion of these groups into fewer but larger one-out-of-*n* groups by the translators. Each translator group should, at the time of cut-through, have only one path established between the common cut-through terminal and one of its output terminals. The absence of such a path or the presence of more than one path will cause the group check circuit to respond. Each wire spring relay in a relay group of the pulse path selector has a contact protection network connected across each of its two windings. One side of the output path for one group of relays is common and connects to battery through one winding of a transformer in the group check circuit, as shown in Fig. 16. At the instant of cut-through, a transient current will be present in the group check transformer winding. The waveform of this current is largely controlled by the protection network in shunt with the selected wire spring relay winding. At the same time, a reference current is present in a second winding of the group check transformer. The waveform of this current is controlled by an external *RC* network.

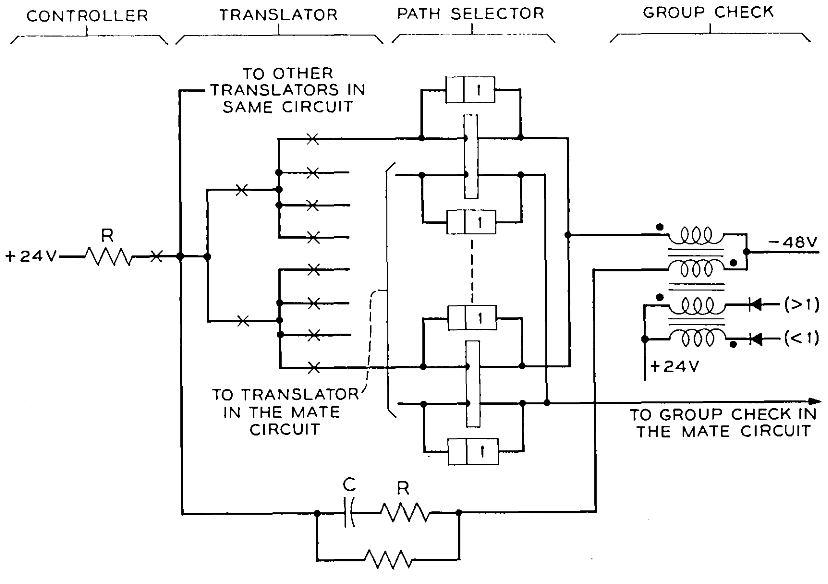

Fig. 16 — Check for single path through a translator by comparing the transient currents at the instant of cut-through.

This external network is designed to give a reference current which closely equals that which is present when one relay operate path exists. The effect of the two nearly equal transient currents is to cancel in the group check transformer and, as a result, no signal appears on either of the two secondary transformer windings. A group check failure signal will be present on both the secondary windings if no, or more than one, relay operate path exists. The polarity of the signals on the secondary windings depends on the type of failure that exists. This is used to detect and report the kind of failure that has occurred. Knowledge of the type of failure is important in diagnosing a frame trouble. One four-winding transformer is associated with each translator group. A group check failure of either kind will cause the wire spring relay voltage cut-through to open. This occurs within a couple of milliseconds and is considerably less than the minimum operate time of any of the wire spring relays.

6.6 *Sequence Control*

The network controller performs all essential timing and sequencing needed for the operation of the switching network circuit. The receipt of an enable signal from the peripheral bus circuit initiates the chain of events leading to the closure of a tip-ring path in the frame. A block diagram of the controller logic is shown in Fig. 17. In the following discussion, all times are measured from the receipt of an enable signal from the central control.

An enable signal may be received from the peripheral bus circuit on either the EN0 or EN1 lead. The corresponding flip-flop will set. The setting of the flip-flop will start the timing circuit, which generates a 2.4-microsecond timing pulse. The timing pulse is gated with the states of the enable flip-flops to enable the address registers to read the information on the peripheral bus (0 or 1) corresponding to the received enable (0 or 1). The trailing edge of the timing pulse is differentiated and gated with the enable flip-flops to return an enable verify signal to the peripheral bus (ENV0 or ENV1) corresponding to the enable (0 or 1) which was received. The differentiated pulse is also used to set the F and VCT flip-flops and reset the S flip-flop. Setting the VCT flip-flop operates the VCT mercury relay, which then cuts through +24 v to the wire spring relay coils through the one-out-of-eight and one-out-of-sixteen translators. The TCV lead activates the group check circuit at this time. The operation of the VCT relay is slowed to insure that the reed relays in the translators have operated before cut-through

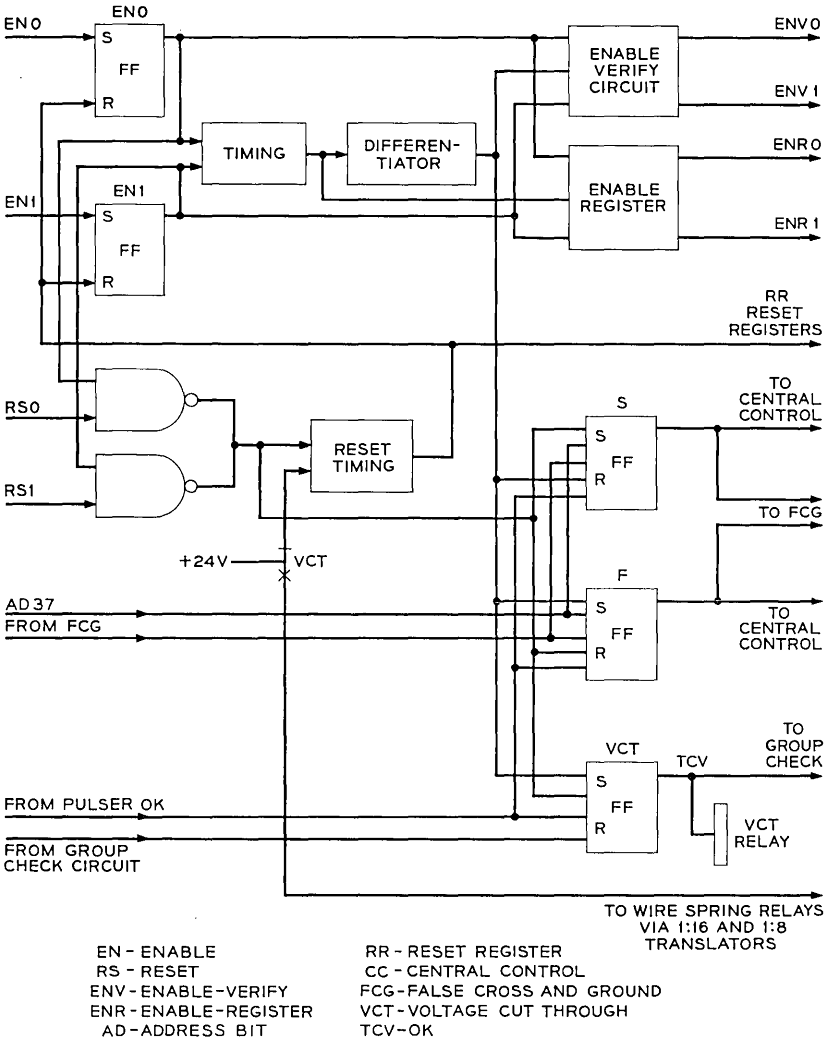

Fig. 17 — Sequence control diagram.

occurs. Under normal conditions, nothing further occurs in the network controller until the ferreed pulser has operated. The signal indicating satisfactory pulser operation starts the resetting of the controller by resetting the S, F and VCT flip-flops. Resetting the VCT flip-flop causes the VCT relay to release, removing power from the wire spring relays.

VCT relay release generates a signal in the reset timing circuit which resets the enable flip-flops and the address registers. The status of the S and F flip-flops is returned to central control. Central control expects that both the S and F flip-flops will be reset in 20 milliseconds. If either or both of these flip-flops are set, it is an indication that the controller has failed to complete a normal cycle.

One such case would be the occurrence of a group check failure. A group check failure causes the VCT flip-flop to be reset. The VCT relay releases, removing power from the wire spring relay. The VCT relay is operated for only 2 milliseconds in the case of a group check failure. This time is insufficient to operate the wire spring relays. The group check failure results in the S and F flip-flops remaining in the reset and set states respectively. When central control detects such a failure, or if it wishes to stop the controller from carrying out a previously transmitted order, it sends a reset signal on the peripheral bus (0 or 1). The reset signal is accepted only from the peripheral bus which corresponds to the previous enable (0 or 1). The external reset signal resets the F and VCT flip-flops and sets the S flip-flop. Resetting the VCT flip-flop initiates the resetting of the enable flip-flop and address register as previously described. The status of the S and F flip-flops indicates to central control that the frame is reset but that the reset was accomplished using the external rather than the internal reset.

The first enable received by a frame operates one of the enable flip-flops and reads information from the appropriate peripheral bus into the address register. Subsequent setting of the other enable flip-flop before the resetting of the first flip-flop will not cause reading of the other peripheral bus, because an EXCLUSIVE-OR circuit, part of the timing circuit, acts to prevent this. Thus the network frame is locked out after receipt of an enable until internally or externally reset.

On junctor switching frames, the S and F flip-flops are also connected to the FCG circuit. This circuit is activated only after a successful network cycle has been completed. The receipt of bit 37 sets both the S and F flip-flops, and interrogates the FCG detector circuit. A successful FCG check will reset both the S and F flip-flops.

6.7 *Ferreed Pulser and Path Check*

The ferreed pulser must be capable of producing a minimum pulse current of 9 amperes in the pulsing path. The 9-ampere minimum must be maintained over all combinations of battery voltage and ferreed load. The pulse width is nominally 300 microseconds at the 2.5-ampere points.

The load impedance varies from 10 ohms pure resistance to 12.5 ohms in series with 1.2 millihenries. Since the available battery voltage varies from 63.7 v to 79.1 v, some step-up in voltage is needed to develop the 9-ampere pulse. The pulser circuit is shown in Fig. 18. A step-up transformer with 4 to 1 secondary-to-primary turns ratio will raise the voltage sufficiently to develop at least 9 amperes into the highest impedance load at the minimum battery voltage. The primary current is obtained by discharging capacitor C_1 through a silicon control rectifier (Q_1) into the primary of the transformer (T_1). The recharging current of the capacitors is limited by a series resistor (R_1) and inductor (L_1).

The wire spring relays used to set up the pulsing path have a variation in their operate time. This makes it desirable to operate the pulser upon the completion of a pulse path rather than on a fixed time basis. To accomplish this, circuitry is included in the pulser which detects the presence of continuity on the pulse path. Two relays (relay 1 and relay 2), whose windings are in series with the battery voltage, transformer secondary and pulsing path, operate when continuity exists through the pulsing path. Relay 1 operates first and removes capacitor C_1 from the battery. The operation of Relay 2, delayed slightly by capacitor C_2, removes a shunt from the gate of the silicon control rectifier and

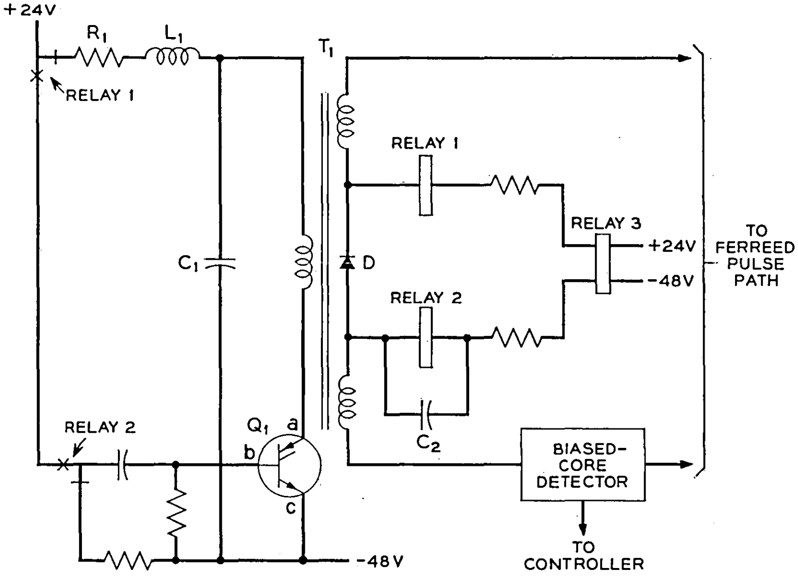

Fig. 18 — Ferreed pulser diagram.

triggers the silicon control rectifier, causing the capacitor to discharge into the transformer primary. The diode (D) in series with the transformer secondary conducts in the forward direction during pulsing and prevents any reversal of current through the load due to overshoot on the trailing edge of the pulse.

The windings of a third relay (relay 3) are also in series with the battery which is connected to the transformer secondary. Under normal conditions, with no short to ground existing in the pulsing path, the current in each winding of the relay will be the same and the relay will not operate. If, however, a short to ground exists somewhere in the pulsing path, the current flow in the winding connected to the −48-v supply will be twice that in the other winding and the relay will operate. The operation of this relay may be detected by the central control.

It is necessary for the pulser circuitry to give an indication to the controlling circuitry that the pulser has fired, so that the wire spring relays and other circuitry can be reset. Also, it is desirable to monitor the amplitude of the pulse to insure that it is of sufficient amplitude to operate the ferreed crosspoints. These two functions are combined in the biased-core detector. This is a square-loop core biased so that the pulser current must exceed 9 amperes to switch the core. A winding on the core goes to the controlling circuitry and signals when the pulser current is greater than 9 amperes.

6.8 *Test Vertical Functions*

Any path through the network fabric involves the use of at least one junctor. The junctor and associated junctor terminals are both physically and functionally the center of the network.

A special connection may be made to any pair of junctor terminals. This is accomplished by means of a test vertical, sometimes called the "ninth vertical." The test vertical and its associated controls are part of the junctor switching circuit. It consists basically of a tip-ring pair which may be connected to any pair of junctor terminals by means of a bipolar switch associated with each junctor terminal. The test vertical and the associated controls are organized in a manner similar to the frame fabric and control circuits. Therefore the junctor switching frame contains two test verticals, one associated with each of the two pairs of grids. One such tip-ring test access serves 128 pairs of junctor terminals. The bipolar test access ferreed switches may be operated or released by separate selected pulse paths, or they may be controlled in some cases by inserting the bipolar switch in the over-all pulsing path of the junctor switching frame. A test vertical connection may be established or removed independent from or concurrent with the selection of a new network path. The circuitry which controls the state of the test vertical is basically an extension of the frame control circuitry.

The central control uses the test vertical either to perform a test or to establish a test condition on any pair of junctor terminals. The FCG check is a frequent and routine test which is performed on most new network paths. This test checks the newly established path for false crosses or grounds. Access to the path is by means of test verticals. The actual test is conducted by a current-sensing ferrod which is connected to the test vertical as indicated in Fig. 19. An instruction to the junctor switching frame to connect with FCG will establish the desired path through the fabric of the frame and connect the associated pair of junctor terminals to the test vertical. The current-sensing FCG detector circuit is then connected to the vertical. These actions take up most of

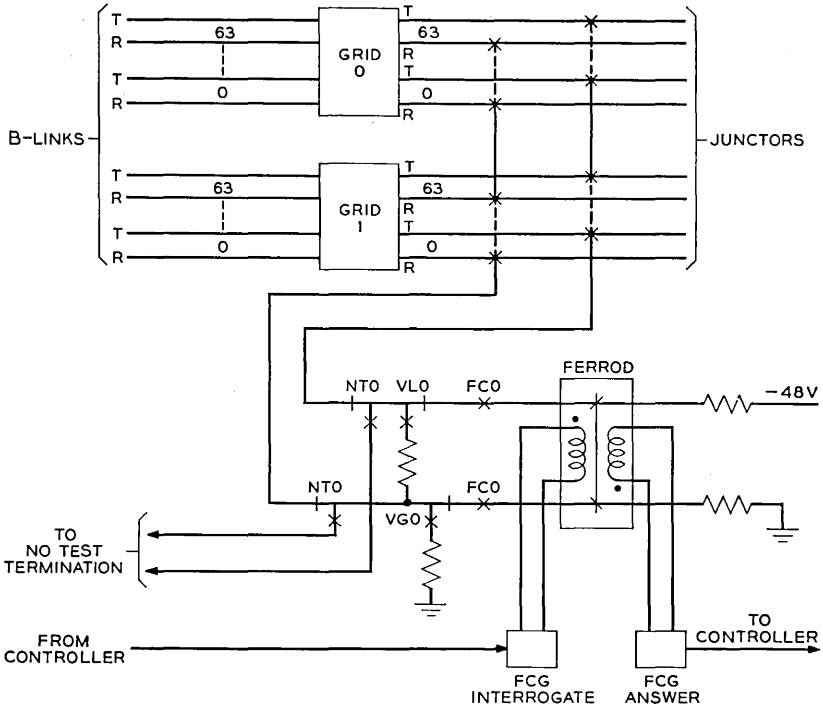

Fig. 19 — Test vertical access for one pair of grids.

the 20-millisecond frame cycle time. Within a millisecond of the end of the cycle, the FCG signal will be present on bus bit position 37. If the indication from the frame control circuitry is that all frame fabric actions have been executed successively, then the presence of this FCG signal will initiate the interrogation of the FCG ferrod. The success or failure of this test will be conveyed to the central control by means of the S and F monitor points of the frame control circuitry.

A "connect verify loop start" or "connect verify ground start" instruction may be performed by the junctor switching frame. These functions connect a resistor across the tip and ring conductors or between only the ring conductor and ground of the test vertical pair. These two test conditions are used by the central control to verify that it has restored the connection between a line terminal and its line scanner ferrod. With a network connection between a junctor terminal and a line terminal, central control can generate a request-for-service condition in any line scanner ferrod. Since the line scanner contains two types of ferrods, two separate test conditions may be established by means of the test vertical.

In addition to the primary functions of the FCG test and both of the restore verify test conditions, these tests also serve as additional aids in the systems network fabric diagnosis.

A fourth function which uses the test vertical is the operate-no-test function. A bridged test connection may be made to any pair of junctor terminals. This type of connection is traditionally referred to as a "no-test connection." This general-purpose type of test connection provides the means for connecting any external transmission testing facilities to any network path.

Each of these four test vertical functions requires a full network cycle. A test vertical may be used for only one of these four test conditions at any time.

A junctor switching frame may execute seven separate instructions; five of these involve the use of the test vertical. Initiation of any of these test vertical functions requires the presence of the peripheral bus bit 37. This FCG signal occurs at a time when all action in the network fabric is completed, and the receipt of bit 37 marks the time in the network cycle when the test vertical becomes connected to either of the two resistive verify terminating resistors or to the external no-test connection. An instruction to the junctor switching circuit to remove NT, FCG, or verify will release the selected bipolar ferreed and disconnect the test vertical from any of its previous test connections.

6.9 *Maintenance Facilities*

A number of test points and special circuits are provided in each network frame to facilitate automatic diagnosis. These test points are connected to strategic points in the circuit. These points may be connected to the central control by means of a diagnostic bus. The central control may request that any network frame be connected to this bus by means of an instruction transmitted to the frame. This diagnostic bus interconnects the central control and all network frames in a manner similar to the peripheral bus. Either of the two circuit groups in any network frame may be connected to the central control in this manner. A special instruction must be transmitted to a network frame requesting that one of its circuit groups be put in a test point access mode. By correlating the states and noting the sequence in the change of states of these test points, it is possible to diagnose malfunctions. Some circuit failures require that the circuit be removed from active control of the frame. This is accomplished by putting that circuit half in a quarantined mode of operation. A circuit half is quarantined by an instruction transmitted by the central control to the remaining active circuit half. Similarly, the circuit half may be restored to its active mode of operation by an instruction to the active circuit group. A quarantined circuit does not have access to any part of the frame network fabric. All control of the network fabric is now performed by the remaining operative circuit half. The quarantined circuit can respond and perform all its timing, sequencing and pulsing functions but will, in this mode of operation, use a dummy pulse path. This allows a circuit to be diagnosed either as an active circuit or while in a quarantined mode of operation. All modes of either circuit half of the network frame are under the control of central control. The monitoring channels that exist between the frames and the central control indicate the states of any circuit half at any time.

Manually operated controls are provided only for the removal of power from either side of the frame. These controls are mechanically interlocked pushbuttons. Manual removal of power will be reported to the central control by means of the identical status-indicating test points which exist in each circuit half.

VII. SUMMARY

Laboratory testing and preliminary system evaluation programs have demonstrated that all initial operating objectives of the switching network have been met very successfully. The result of system testing programs has also confirmed the accuracy and usefulness of the automatic diagnosis facilities incorporated in the network control circuits.

The several codes of ferreed switches which utilize differentially wound ferreed crosspoints are probably the devices of primary interest in the switching network area. The switches are compatible with both the outside plant and the electronic central processors. The direct control of the ferreed switches by a combination of electronic and electromagnetic devices in duplicated circuitry represents at the present time a reasonable balance between cost and reliability.

The packaging of the network fabric with its associated controls in the same frame and the independent operation of the frames from a common peripheral communication bus present to the traffic engineer an extremely versatile system for building office switching networks. Future growth and changes in traffic patterns are accommodated with a minimum of effort and cost.

VIII. ACKNOWLEDGMENTS

Acknowledgment is made of the many contributions of T. N. Lowry, F. H. Myers, and R. L. Simms, Jr., in the circuit planning phases; and to R. A. Shaffer for his contributions in developing the ferreed pulser. The able assistance of R. W. Engroff, W. A. Lawrence, J. A. Romano, and F. J. Wilkinson in testing and maintaining the network is hereby acknowledged.

The authors are indebted to R. W. Ketchledge and A. Feiner for their many valuable suggestions and discussions.

REFERENCES

1. Ferguson, J. G., Grutzner, W. E., Koehler, D. C., Skinner, R. S., Skubiak, M. T., and Wetherell, D. H., No. 1 ESS Apparatus and Equipment, B.S.T.J., this issue, p. 2355.
2. Connell, J. B., Hussey, L. W., and Ketchledge, R. W., No. 1 ESS Bus System, B.S.T.J., this issue, p. 2021.
3. Feiner, A., and Hayward, W. S., No. 1 ESS Switching Network Plan, B.S.T.J., this issue, p. 2193.
4. Feiner, A., The Ferreed, B.S.T.J., **43**, Jan., 1964, p. 1.
5. Feiner, A., Lovell, C. A., Lowry, T. N., and Ridinger, P. G., The Ferreed — A New Switching Device, B.S.T.J., **39**, Jan., 1960, p. 1.
6. Freimanis, L., Guercio, A. M., and May, H. F., No. 1 ESS Scanner, Signal Distributor, and Central Pulse Distributor, B.S.T.J., this issue, p. 2255.

No. 1 ESS Scanner, Signal Distributor, and Central Pulse Distributor

By L. FREIMANIS, A. M. GUERCIO and H. F. MAY

(Manuscript received January 9, 1964)

The peripheral units of No. 1 ESS, described in this article, include the scanners and signal distributors. The scanners serve to collect information for the central control, and the signal distributors execute central control orders in the system. The peripheral units receive orders through the communication buses. The central pulse distributor serves to connect peripheral units to the communication buses so that a central control order, which is broadcast over the bus system, enters one particular peripheral unit.

I. INTRODUCTION

The No. 1 electronic switching system (ESS) includes peripheral units which serve as buffers between the central control with its associated stores and the outside world of lines, trunks, automatic message accounting (AMA) centers, and maintenance personnel. The peripheral units include the switching network, scanners, signal distributors, central pulse distributors, AMA recording equipment, teletypewriters and miscellaneous common systems circuits. This article describes the scanners, signal distributors and central pulse distributors. Associated articles describe the network[1] and other peripheral units[2] of No. 1 ESS.

II. FUNCTIONS OF SCANNERS, SIGNAL DISTRIBUTORS, AND CENTRAL PULSE DISTRIBUTORS

2.1 *Scanners*

Every telephone switching system embodies some mechanism for detecting service requests and supervising calls in progress. Input information of this nature is furnished to No. 1 ESS by the operation of scanners which sample or scan lines, trunks and various diagnostic points at discrete intervals of time as directed by the system. It might be said that the scanners are the sensory organs of the system, since all external stimuli are received through them.

2.2 *Signal Distributors*

In addition to detecting and monitoring changes by means of the scanners, the system must be provided with means to operate and release relays in trunk, service and power control circuits. The signal distributors translate orders received from central control and distribute high-power, long-duration pulses to the various relays in No. 1 ESS. These relays[3] are controlled by polarized signals and are magnetically latched (held operated), thus providing a memory function in the end device.

2.3 *Central Pulse Distributors*

Many control functions in No. 1 ESS must be carried out at electronic speeds or at speeds exceeding the capability of the magnetic latching relays controlled by the signal distributors. Typical functions are outpulsing on trunks, operating miscellaneous flip-flops and the very important function of "enabling" various peripheral units (network controllers, scanners, etc.). Since the many peripheral units receive their orders from central control over a common bus system,[4] a particular peripheral unit must be connected to the bus when it is to receive an order. This is accomplished by sending a preliminary pulse to a particular peripheral unit before the order is transmitted on the bus system. This preliminary pulse, known as the "enable," is provided by the central pulse distributor, which translates a coded address received from the central control and transmits a pulse to the peripheral unit identified by this address.

III. SCANNER DESCRIPTION

3.1 *General*

Several categories of scanners are provided in No. 1 ESS. Primarily, they differ in purpose, location and the type of sensing element associated with the point to be scanned. For convenience and reliability, the scanners are provided in 1024-point modules which are physically located on network, trunk or junctor frames. In addition, one or more master scanners are provided for diagnostic and miscellaneous scanning functions.

3.2 *Ferrods*

The sensing element used in all scanners is the ferrod sensor (hereinafter called a "ferrod"), a current-sensing device operating on electromagnetic principles. It consists of a ferrite rod around which is wound a pair of solenoidal control windings. In addition, a single-turn interrogate winding and a single-turn readout winding are threaded through two holes in the center of the ferrite rod. The control windings are connected in series with the circuit to be sensed or supervised — for instance, a customer line. The ferrod[5] may be visualized as a transformer in which the magnetic coupling between the interrogate and readout windings is determined by the current in the control windings. This current in turn reflects the state of the circuit to be sensed, such as the on-hook or off-hook condition of a line. A diagram of the ferrod is shown in Fig. 1.

The magnetic state of the ferrite rod is sensed by pulsing the interrogate winding with a 0.5-ampere bipolar pulse. The positive half-cycle, of 3 μsec duration, switches the ferrite immediately surrounding the interrogate winding (single turn), provided the control windings (solenoid) are not energized. Ferrite switching induces a voltage in the readout winding. The induced voltage is approximately 200 mv when the control windings are not energized. On the other hand, when the control windings are energized, the ferrite rod is saturated and the coupling between interrogate and readout windings is greatly reduced, with the result that the readout signal is generally less than 20 mv. The negative half-cycle of the interrogate bipolar pulse resets the ferrite in the vicinity of the holes.

3.3 *Ferrod Types*

Three types of ferrods are used in No. 1 ESS. These differ in sensitivity and winding resistance. Their characteristics are shown diagrammatically in Fig. 1 and tabulated in Table I.

3.3.1 *Type 1B Ferrod*

The medium-sensitivity ferrod, type 1B, is used to detect call originations. It supplies ground and battery to the tip and ring of all loop-start lines through the contacts of a normally closed cutoff ferreed in the line switching frame. In the case of coin or PBX lines, the two windings of the ferrod are connected in series and supply battery to the ring conductor through the cutoff ferreed. The 1B ferrod is wound with resistance wire to limit the current in the presence of an accidentally grounded line.

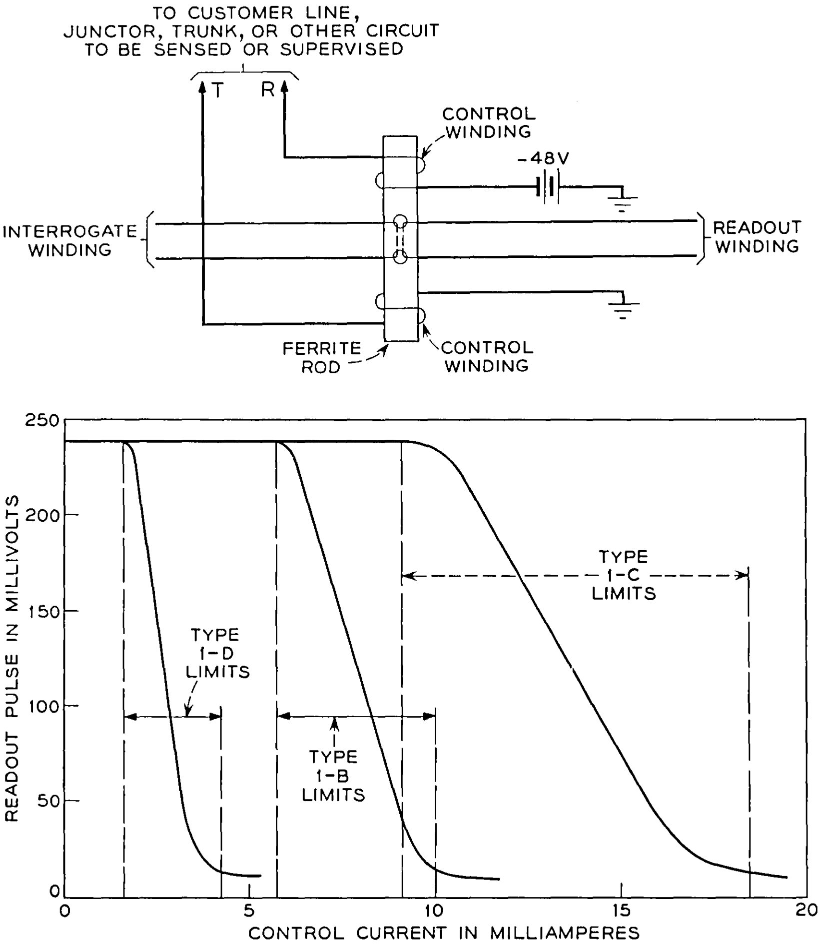

Fig. 1 — Ferrod schematic and typical characteristics.

Incorporated in the ferrod package is a conventional resistor-capacitor contact protection network to protect the cutoff contacts and to suppress electrical interference.

3.3.2 *Types 1C and 1D Ferrod*

The type 1C ferrod is the least sensitive ferrod. It is used in series with the talking battery feed inductors in junctor and trunk circuits to supervise the customer connection. A typical circuit using the 1C ferrod on the

TABLE I — ELECTRICAL SPECIFICATIONS OF THREE FERROD SENSOR CODES

Ferrod Sensor	1B	1C	1D 1E
Number of windings per ferrod	2	2	2
Resistance per winding	660 ± 10%	19 ± 10%	35 ± 10%
Turns per winding	1600	930	1300
Approximate inductance (both windings)	220 mh	70 mh	500 mh
Maximum current	100 ma	100 ma	100 ma
Maximum unbalance between windings	—	1.0 ohms	1.0 ohms
Nonoperate current	5.5 ma	9 ma	1.8 ma
Operate current	10 ma	18 ma	3.9 ma

* The 1E ferrod is electrically identical to the 1D.

local customer side of a trunk circuit is shown in Fig. 2. The type 1D ferrod is the most sensitive ferrod; it is used on the distant office side of trunk circuits.

3.3.3 *Ferrod Sensitivity*

The sensitivity of the various ferrods is controlled by varying the number of turns in the control windings and by adding a magnetic return path for the ferrite rod. The ferrod hole geometry determines the operate threshold and the slope of the output voltage characteristic. The several ferrod types are specified as having a 2:1 ratio of "no output" to "full output" control current, but individual ferrods exhibit a much lower ratio.

3.3.4 *Ferrod Package*

The ferrods are packaged in pairs in a molded ladder similar to that used for wire spring relays. Several ferrod assemblies are shown in Fig. 3.

3.4 *Scanner Operation*

The functional arrangement of the scanner is shown in Fig. 4. The ferrod sensor matrix consists of 64 rows, each containing 16 ferrods. To select a row for interrogation, the addressing equipment of the central control sends an enable pulse via the central pulse distributor. This signal opens the address register, permitting the *X* and *Y* signals to be received. One *X* input and one *Y* input are then selected and pulsed by the addressing equipment, which will hereafter be referred to only as a "central

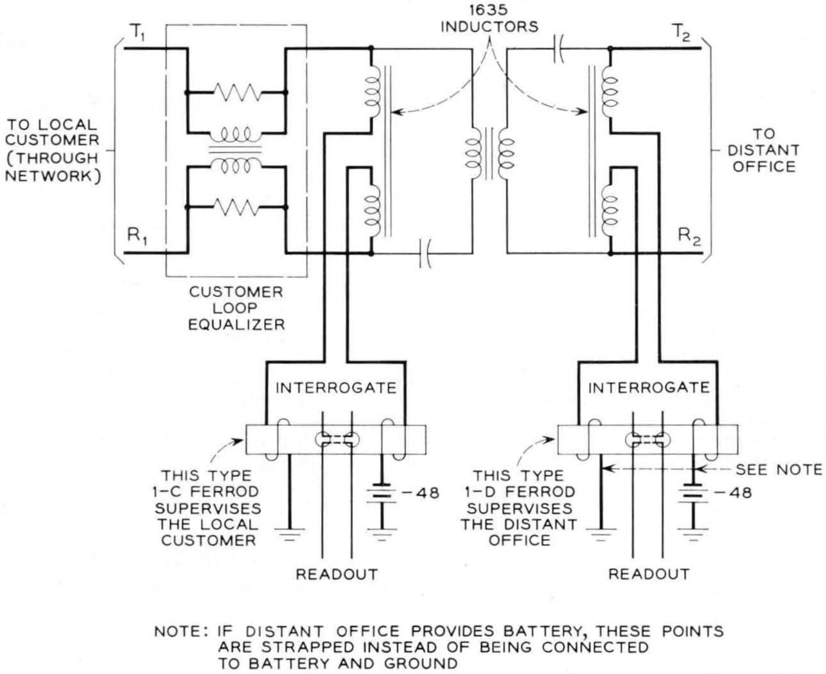

Fig. 2 — Trunk supervision using 1C and 1D ferrods.

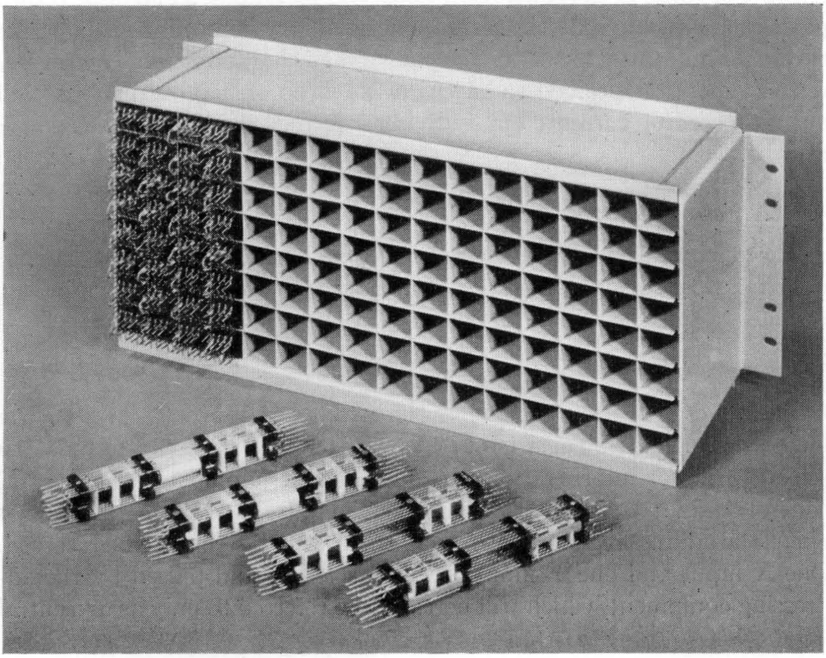

Fig. 3 — Typical ferrods and combined mounting shield.

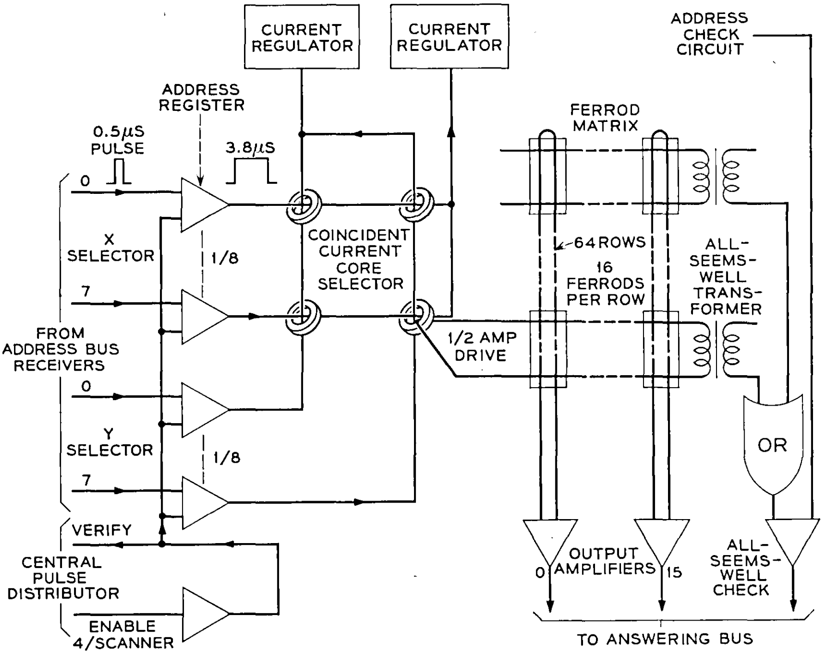

Fig. 4 — Functional diagram of a 1024-point scanner.

control." This in effect selects one of sixty-four cores, the output of which interrogates a row of 16 ferrod sensors. The outputs of all 16 ferrods are detected and transmitted simultaneously back to central control.

3.5 *Scanning Modes and Rates*

The kind of scanner used and the scanning mode, directed or cyclic, depend on the type of information the system desires at any particular time. Each subscriber line is cyclically scanned via a line scanner every 100 msec for originations. When an origination is detected, the subscriber line is connected to a dial pulse receiver. Scanning then occurs, using a master scanner on a directed basis every 10 msec to insure that all of the dial pulses are counted. After all the digits have been received and a connection has been established, the system supervises the call, using either a junctor or a trunk scanner, depending on whether the call is intraoffice or interoffice. Scanning now occurs on a cyclic basis every 100 msec until hangup is detected and the connection is removed. The sequence of events for an intraoffice call is shown in Fig. 5.

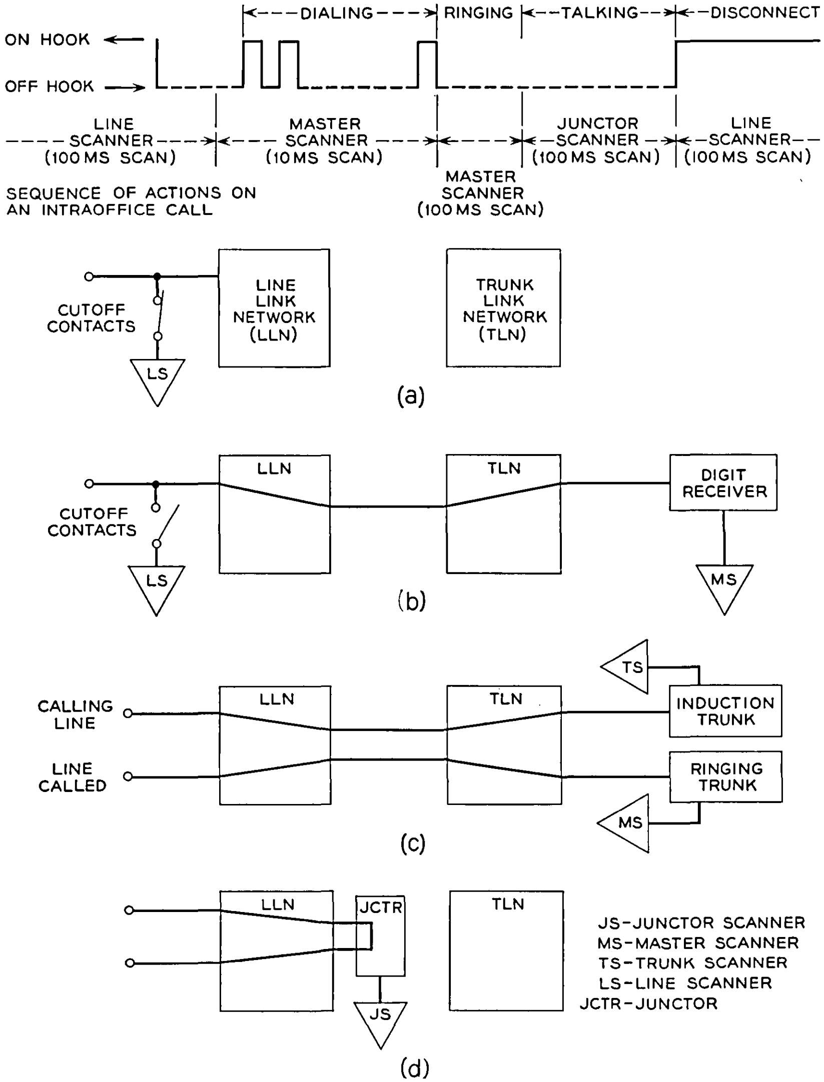

Fig. 5 — Connections for an intraoffice call: (a) line supervision, (b) digit reception, (c) ringing, and (d) talking.

The system uses a basic cycle which is repeated every 100 msec. This cycle is further broken into 5-msec intervals. At the beginning of each interval, the system accomplishes high-priority tasks, such as dial pulse reception and supervisory scanning of junctor and trunk circuits. During each interval, one-half of the digit receivers and one-twentieth of the junctor and trunk circuits are scanned. Remaining time is used for low-priority work such as line scanning, setting up connections through the network, and maintenance routines.

3.6 *Use of Scanner Information*

There is no intelligence built into a scanner, so all decision making is done by central control. The results of a scan, the states of 16 ferrod sensors, are transmitted simultaneously to central control, where they are stored in flip-flops. These outputs are then compared with the last look information stored in the temporary memory (call store). If there is a change of state, the system, knowing which line (or test point) is involved, concludes that an order was successfully executed or that the next instruction of the stored program must be performed. In either case, the temporary memory is updated.

3.7 *Scanner Organization*

Each scanner consists of two major parts, the ferrod sensor matrix and the access and readout equipment for it. For maximum reliability the access and readout equipment is completely duplicated. Each set of equipment is referred to as a "controller." Ferrods which are assigned on a per-circuit basis are not duplicated.

Being an ESS peripheral unit, each scanner receives and transmits information on the peripheral bus system. This bus system is completely duplicated. Both scanner controllers have the ability to work with either bus. Associated with each scanner are four enable inputs. When the central control selects one of the four enables via the central pulse distributor circuit, it picks a particular controller-bus combination. Each controller-bus combination provides complete access to the unduplicated matrix.

3.8 *Address Register Considerations*

When the central control wishes to scan a particular point, it obtains from the call store the enable information for the particular scanner involved and the X and Y address of the point. This information is in binary form. Since there are many peripheral units (a large central office may contain 100 or more scanners), economic considerations suggest that the central control do as much translation of the binary address as is feasible. The advantage of doing this is obvious. After central control translates the binary word, it sends out addresses in the form of one-out-of-n codes in various numbers of groups, the number of groups and the value of n being dictated by the size and type of peripheral unit. For a 1024-point scanner there are two address groups each containing eight inputs ($n = 8$).

Addresses (100-ma, 0.5-μsec pulses) are sent to peripheral units as single-rail signals. In practically all cases, these narrow pulses must be stored in order to be useful. Since the input information is sent single-rail, the use of a flip-flop as the storage element would require a reset signal immediately prior to the start of a new cycle or immediately after the execution of an order. The reset signal could, of course, be generated locally or externally. Since the cycle time of a scanner is relatively short (11 μsec), storage elements other than flip-flops become practical. In particular, those types which do not require resetting become extremely attractive. An *LC* type of pulse stretcher which inherently "resets" itself is used by the scanner in its address registers. This type of circuit is also used in numerous other applications in a scanner.

3.9 *Address Register Circuit*

The address register circuit is shown in Fig. 6. It consists of two 2-input AND gates followed by a single pulse stretcher. Each AND gate, one of the primary windings of the transformer, is associated with one of the input buses. The two AND gate inputs consist of an address input and an enable signal. Normally, the enable signal precedes the address to

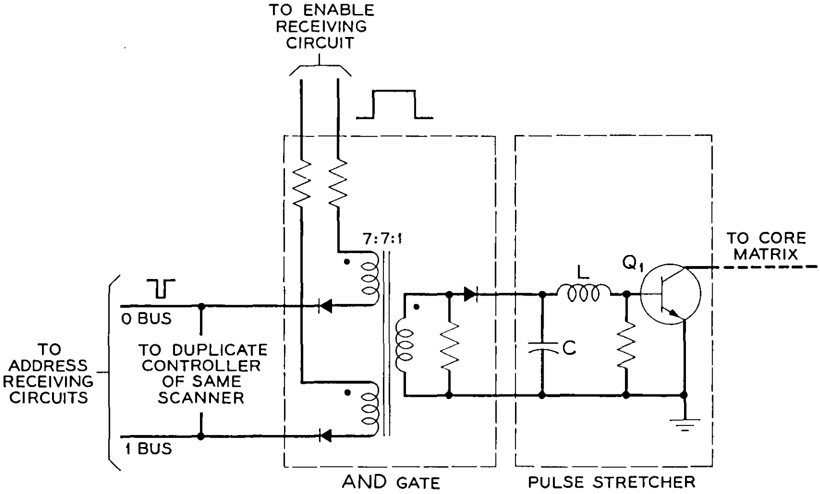

Fig. 6 — Address register circuit.

a controller. To insure sufficient time coincidence of the enable and the address pulses (0.5-μsec pulses), the enable signal is stretched to 2 μsec. Differences in arrival times between the enable and addresses are caused by variations in cable lengths and variations in operate times of transistor circuits.

Battery is connected to one side of the transformer primary by the stretched enable signal. Ground is then applied to the other side of the winding by the address receiving circuit. The resulting current is then transformed to the secondary winding, where it charges capacitor C. The discharge path for the capacitor is through the inductor L and the base-emitter junction of transistor Q_1 to ground. This turns on the transistor for the half-cycle during which the capacitor rings out. A nominal on time of 3.8 μsec is used.

3.10 *Method of Selecting One Row of Ferrod Sensors for Interrogation*

Selection of a particular row out of 64 rows of ferrods in a 1024-point scanner is accomplished using address register circuits previously described and a coincident-current core matrix as shown in Fig. 4. The cores are arranged in an 8-by-8 array. Each core is made of square-loop ferrite and is provided with four windings. Two of these windings are drive inputs and are associated with the X- and Y-address inputs. The third winding is the output, which drives a row of 16 ferrod sensors, while the fourth is the bias winding. When the central control selects one lead in the X group and one in the Y group, it is in effect selecting one row and one column of cores to be driven by 700-ma, 3-μsec pulses. The current pulse to each row and column is a half drive. The core at the intersection of a driven row and column receives full drive, switches, and produces a 0.5-ampere pulse which drives a row of ferrods. Each of the remaining cores in the driven row and column receive only a half drive. These cores do not switch, since half drive is not sufficient to overcome the bias.

The core matrix is duplicated but the ferrod sensor matrix is not. To provide access to the ferrod matrix from either core matrix, the output windings of respective cores in each matrix are connected in series and then to the ferrods. Such an arrangement requires that the standby core matrix present a low impedance to the driving core. This is normally accomplished by maintaining bias current in the standby matrix as well as in the active or driving matrix. The bias current is monitored by a series relay. When current ceases to flow in the bias loop of a matrix, one drive winding of each core in that matrix is switched automatically to the role of a bias winding, using contacts on the released relay. Power is provided to this emergency bias loop from the battery associated with the working controller. The series relay also serves another function. It provides a high impedance in the bias loop, thus preventing unnecessary loading of the drive inputs.

3.11 *Output Circuitry*

It is the function of the output circuitry to convert ferrod outputs (typical amplitudes were given earlier) to signals which are usable by the central control. These signals are then transmitted on both duplicated peripheral reply buses simultaneously. By doing this, synchronous operation of both central controls is possible, since each central control normally receives scanner answers from a different bus.

Scanner output signals consist of either pulses (1's) or no pulses (0's). If the control windings of an interrogated ferrod have less than the nonoperate value of current, the ferrod output is detected and transmitted as a pulse (1). The output of an interrogated ferrod whose control windings have more than the operate value of current is detected and transmitted as a 0.

The output circuitry (see Fig. 7) consists of a 2-input AND-gate amplifier followed by a cable driver. Ferrod outputs provide one input to the AND gate, while a strobe circuit provides the second. Normally, neither of the two transistors in the amplifier is on. If the ferrod output signal has sufficient amplitude to turn on transistor Q_1, its collector current provides base current for transistor Q_2, turning it on. The strobe potential is applied approximately 0.75 μsec after the start of the ferrod output. The resulting current flow from the strobe circuit through the primary winding of transformer T_2 produces an output signal. If the ferrod output signal is insufficient to turn on transistor Q_1, no output signal will be generated when the strobe pulse is applied. However, the strobe input has a fast rise time, so there is an undesirable current path to ground provided by the junction capacitance of the transistor. To prevent this capacitive current from producing a false output, capacitor C is provided as a shunt path around the transformer primary winding.

The readout equipment is duplicated and driven by an unduplicated ferrod matrix. When a controller is ordered to interrogate a row of ferrods, the output amplifiers associated with that controller receive a strobe pulse permitting them to drive both sets of cable drivers.

Signals on the peripheral bus are nominally 0.5 μsec wide. The positive portion of the bipolar ferrod output is approximately 1.5 μsec in duration.

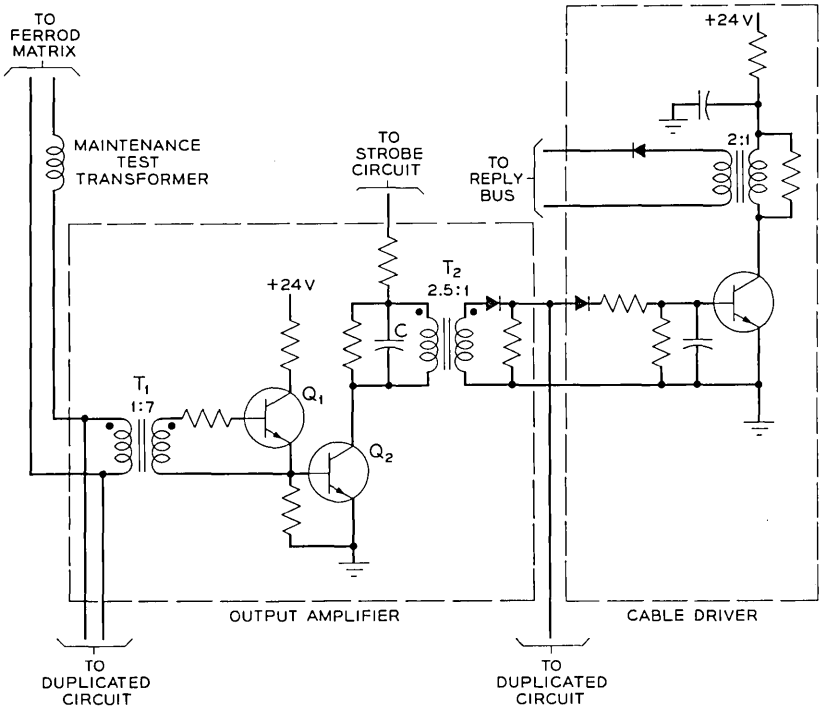

Fig. 7 — Output circuitry.

By sampling this relatively wide pulse with a 0.5-μsec strobe signal, a pulse suitable for bus system use is obtained. There is also a signal-to-noise advantage obtained by strobing. However, the output margins from a ferrod are such that the latter advantage is not an important one in the scanner design.

3.12 *Maintenance Features*

When a controller receives an enable signal over a pair of wires from the central pulse distributor, the signal is stretched to a width of 2 μsec as previously described. At the termination of this stretched enable signal, a new signal is generated by the controller and sent back over the previously enabled pair in such a manner that the enable receiving circuit is not reactivated. Doing this permits central control to verify that the enable signal reached the correct equipment.

During each normal cycle, an all-seems-well scanner (ASW-S) output is produced and sent with the regular 16 answers to central control. If this pulse does not appear with the scanner replies, the replies are ignored. Central control then repeats the same instruction. If an ASW-S pulse is not produced after several retrials, the particular controller-bus combination used is marked "in trouble" in the call store and another combination is selected merely by using a different enable input to that scanner. When system time permits, the faulty equipment is located, using a stored diagnostic program.

The ASW-S circuitry provides a check on the access part of a controller. In essence, it is a 2-input AND gate. One input indicates that not more than one lead in each address group was selected. The second input indicates that a row of ferrods was interrogated. The absence of either input will manifest itself as an ASW-S output failure.

Normally, scanner outputs are not predictable since they depend upon the state of the ferrods. Therefore, the readout circuitry is routinely checked to determine if it is working properly. This is done using the maintenance test (MT) input which is part of the address bus and is handled like an ordinary address; that is, the enable pulse is first sent, followed by the MT order. In series with each of the 16 readout columns of a ferrod matrix is a secondary of an MT transformer (see Fig. 7), the primaries being in series. By means of these transformers, the MT order generates simulated nonsaturated ferrod outputs. Since the 16 columns receive the test pulse simultaneously, each of the 16 output amplifiers should produce 1's. The ASW-S signal is not produced during this cycle. The absence of an output indicates an open-circuit trouble. Short-circuit troubles in the output amplifiers can be detected by sending an enable and then pulsing only one pair in only one address group. Normally, neither the ASW-S circuit nor any of the 16 output circuits will reply.

A controller can be in any one of several modes, such as normal or power-off. Assigned to each controller are three scan points. When a controller is in a particular mode, it saturates or unsaturates these ferrods so that the unique code assigned to that mode is obtained. By scanning these points, central control can determine the present mode of the controller. These status ferrods are part of the master scanner.

3.13 *Power*

Power for the two controllers of a scanner is provided from an unregulated +24-volt central office battery over separate feeders. The average current requirement for both controllers is approximately 0.5 ampere. In general, ferrod control winding current is provided from the

−48-volt battery. However, there are numerous applications where the +24-volt battery is used instead.

As a maintenance feature, provision has been made to control power remotely by the central control. Out-of-service keys are also mounted on the frame housing the scanner so that power can be removed manually. To insure that power is not removed from both controllers simultaneously, mechanical and electrical safeguards are provided.

3.14 *Equipment Details*[3]

Scanner circuits are built on printed wire boards.[6] This is also true of the coincident-current core matrix. Several circuit packages are shown in Fig. 8. These printed wire boards are plugged into connectors arranged on mounting plates. All connections between circuits are made by wiring from one connector to another.

A master scanner frame is shown in Fig. 9. At the top of this bay are connecting terminal strips and card housings which contain bus and scanner control circuits. The next two mounting plates contain biasing relays, resistors and the control panel. Immediately below these are four ferrod mounting racks. Each rack contains 128 ferrod packages, each package consisting of two ferrod sensors, making a total of 1024 ferrod sensors.

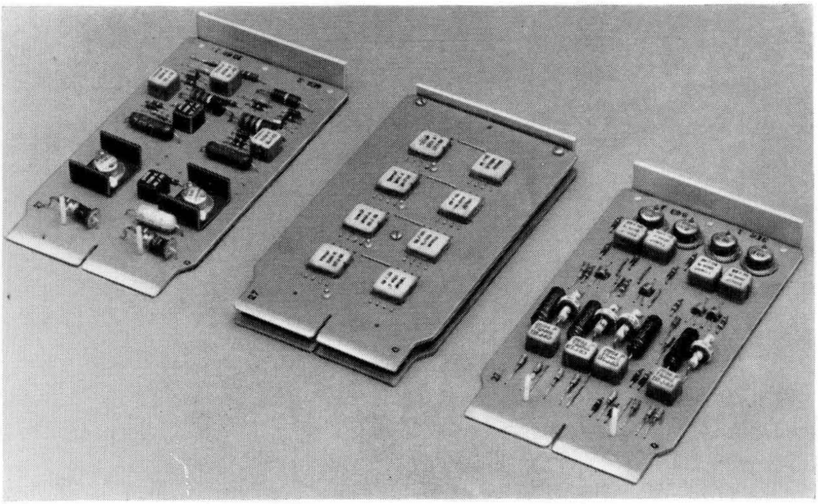

Fig. 8 — Current regulator, 4-by-4 core matrix and address register packages (left to right).

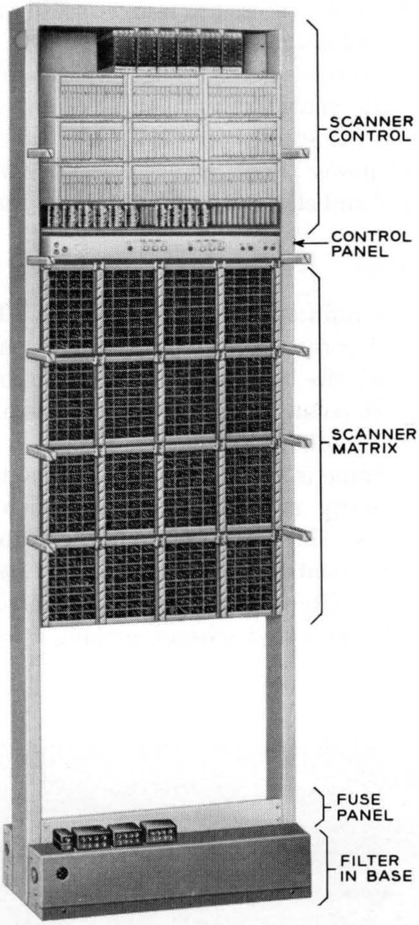

Fig. 9 — Master scanner.

IV. CENTRAL PULSE DISTRIBUTOR AND SIGNAL DISTRIBUTOR DESCRIPTION

4.1 *General*

The central pulse distributors and the signal distributors provide central control with access to many points within the system requiring action signals. Wherever fast access at electronic speeds is required, the central pulse distributor is employed. The signal distributor is used to operate relays in trunk and junctor circuits which do not require access at electronic speeds.

Functionally, both units are large decoders. They are called "peripheral" because they can be located anywhere within the central office and reached from the central control via the peripheral bus. The information is transmitted on the peripheral bus in a coded form. It consists of several groups of 1-out-of-n codes. It is the basic function of both types of distributors to translate this information into 1-out-of-m form, where m is the total number of outputs of the respective distributor.

The decoding and associated functions have to be done in the most economical way which meets the requirements of speed, output level and reliability. The associated functions include receiving and temporarily storing the address information, checking it for errors, and blocking further action while notifying the central control if errors are found.

If errors in the address are not found and the signal indicated by the address is sent out, both distributors in most cases receive a positive indication from the activated point that the decoded signal has been properly received and acted upon. A failure to receive such indication is reported to the central control.

After a failure report, or as a matter of preventive maintenance, the central control may transmit maintenance or diagnostic orders to the respective distributor either to assure that the unit is in proper operational order or to localize a failure.

4.2 *Decoding and Verifying*

The number of outputs required in a distributor is between 512 and 1024. In these sizes, economy can be achieved only if the least expensive devices are provided for each output point. At the present state of the art, there is no electronic device that can economically compete with a contact on a large relay as a decoding element. For this reason the decoding in the signal distributors, where the required access cycle is about 20 msec, is performed by relay contacts.

Where the required access rates exceed the capabilities of relays, electronic devices have been employed. There are several possible arrangements that could provide a decoder capable of operating at electronic speeds in the microsecond range.

In the No. 1 ESS, a diode-transformer gate was chosen as the decoding element in the central pulse distributor (see Fig. 10). One of the reasons is that the transformer provides a balanced output. A pulse from such an output point can be transmitted over twisted pair to remote locations without interference. Also, the pulse provided by an electronic pulser can be shaped so that the least amount of noise is generated in the adjoining cables.

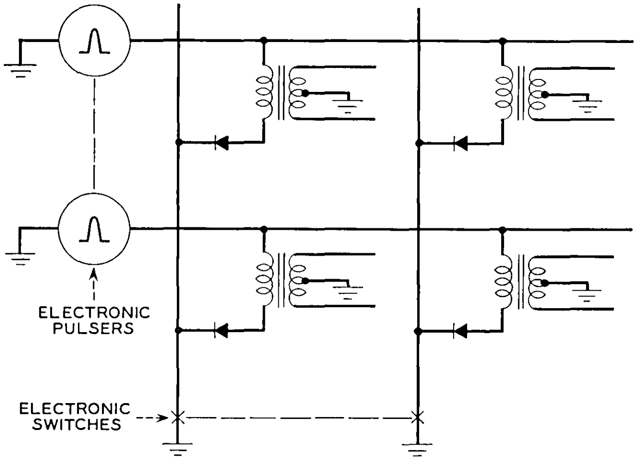

Fig. 10 — Transformer-diode selection matrix.

Another advantage of the transformer-diode arrangement is that bipolar pulses can be easily generated and transmitted by employing a three-winding transformer (see Fig. 11). In many cases, this is done to control the operation and release of a relay over a single pair of wires by using a receiving device that can recognize the two polarities. In the ESS such a device, called a "bipolar flip-flop" (see Fig. 11), is widely employed. This flip-flop assumes one state upon receiving a positive pulse and the other upon receiving a pulse of opposite polarity.

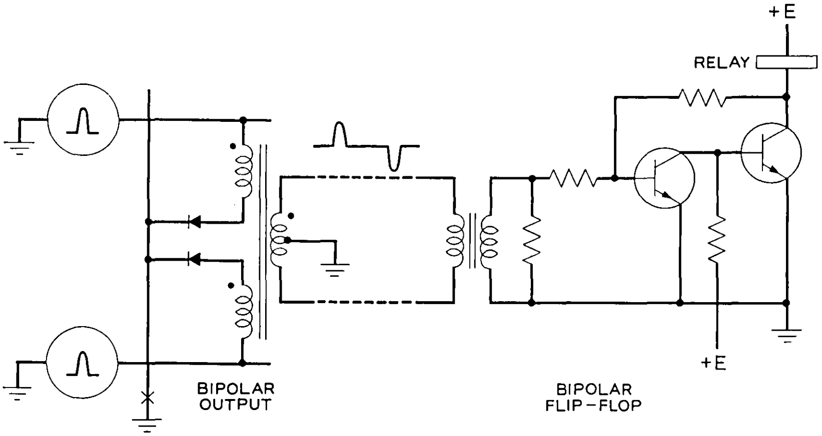

Fig. 11 — Bipolar operation.

The use of a three-winding transformer also provides for the verifying requirement. Whenever the signal transmitted from the central pulse distributor is to enable a peripheral unit for receiving an address from the central control on the peripheral bus, an answer that the enabling has been properly initiated is expected. Such an answer could be transmitted on a separate cable pair. However, the cable pair that transmits the enabling order is vacant at the time the verify answer should come. By employing the third winding on the transmitting transformer, the verify answer can be received over the same cable pair (see Fig. 12).

4.3 *Address Storage*

All the signals on the peripheral bus are in the form of nominal 0.5-μsec pulses. In the signal distributors, the information received from the bus has to be checked for errors before it is acted upon. Some kind of information storage is therefore necessary. The length of storage depends upon the time required to carry out the function of the unit.

In the signal distributor, the information has to be stored until the magnetically latching output relay has definitely operated or released. This time is somewhere between 10 and 20 milliseconds. A bistable transistor circuit (a flip-flop; see Fig. 13a) is employed to perform the storage function in the signal distributor. This flip-flop must have the proper input gating circuitry to permit reception from either of the two buses.

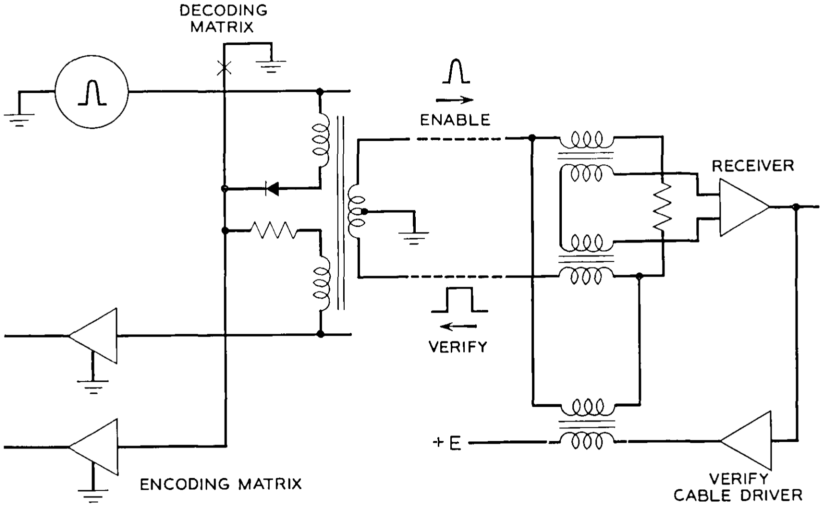

Fig. 12 — Enable-verify operation.

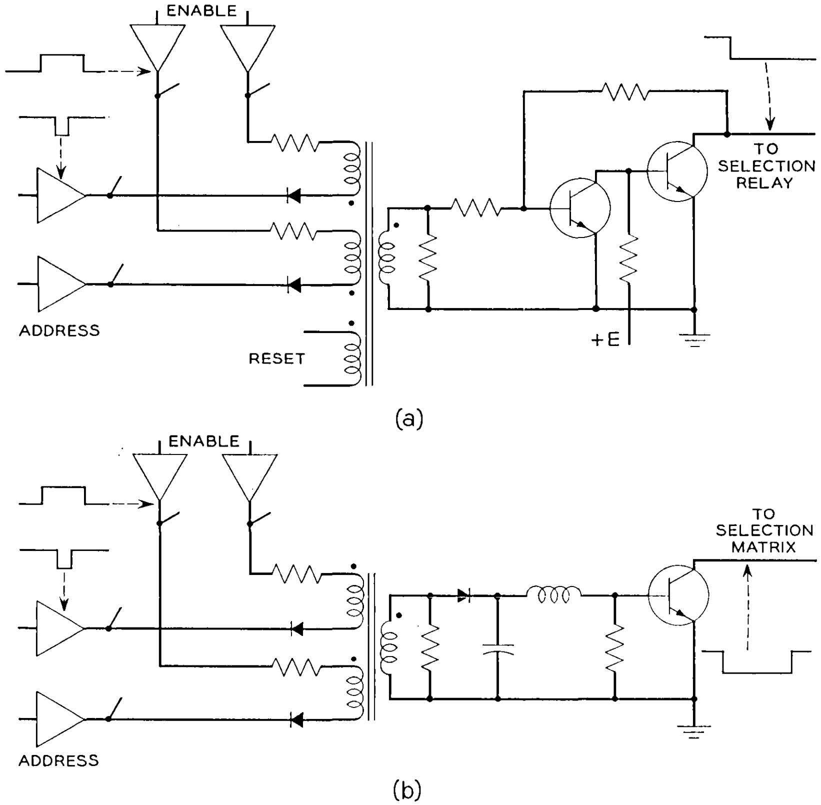

Fig. 13 — Address storage registers.

It also should be capable of operating the primary decoding relays directly, and should use the minimum of components. A special flip-flop has been designed that employs transformer-diode gating for the input signals and has the primary relay as a collector load without buffer stages. The primary relays operate the multicontact wire spring relays that actually establish a path within the decoding matrix to the output relay.

In the central pulse distributor, the address need only be stored for about 2.5 μsec to perform the error checks and produce a nominal 0.5-μsec output pulse. A device simpler than a flip-flop can be employed. A storage circuit that simply stretches and amplifies the input pulse is used (see Fig. 13b). The input gating is quite similar to that in the signal distributor storage circuit. The stretching is accomplished by a diode-capacitor-inductor combination, which provides a rather exact timing virtually independent of variations in the input pulse and supply voltage. The transistor acts as an on-off switch and amplifier. The transistor in the register cell controls the decoding matrix.

4.4 *Error Check*

The address information received by the distributors from the central control may contain errors. Errors may be caused by noise in the transmission path. There may be translation errors in the central control, or a faulty component in the sending or receiving circuitry may cause an error. Finally, errors may be purposely introduced in the address to check the error checking circuitry.

The error checking circuitry must find the errors before the action indicated by the address is carried out. The address is transmitted in groups of 1-out-of-n codes. For instance, the address to the central pulse distributors is in the form of 1-out-of-8, 1-out-of-8, and 1-out-of-16 code, a total of 32 pairs. A 1024-point signal distributor receives its address in a 1-out-of-8, 1-out-of-8, 1-out-of-4, 1-out-of-2, and 1-out-of-2 code.

For an address to be correct, each group should contain one and only one active signal. A signal completely missing in a group would constitute an error, as would two or more signals within a group.

In the signal distributor, the check for errors can be performed by employing the proper combinations of spare contacts on the selection relays, as shown in Fig. 14.

The final selection relays have only make contacts. If a signal is missing within any group and no relay within that group operates, a path cannot be established through the selection matrix. If more than one relay within a group operates, a double path will be established and a wrong output point activated. To prevent this, the contacts of the relays are arranged in a combinational network that will provide a path whenever more than one relay operates.

The presence of such a path within any group will prevent the application of the final output current and notify the central control about the nature of the error.

The central pulse distributor has been designed to find an error in the address within less than a microsecond, and electronic circuits have to be employed. The error check is performed at the outputs of the register cells in the three groups.

It is a simple matter to check that at least one register cell within a group has been activated. An OR gate is provided with as many inputs as there are cells in that group and one input connected to each cell. The output of the OR gate indicates that there is at least one activated cell

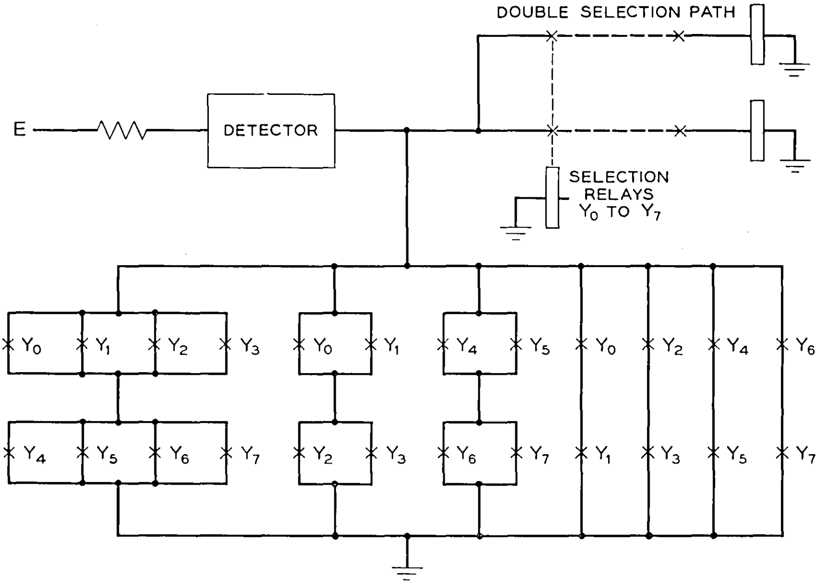

Fig. 14 — Error checking circuits for more than one signal in SD.

in that group. To ascertain that there is no more than one cell activated within that group, a rather elaborate arrangement of logic gates is necessary. For a 1-out-of-n group with $n = 16$, such an arrangement becomes prohibitive. In the central pulse distributor, therefore, a digital-to-analog conversion method is used (see Fig. 15). Let each addressed cell within a group control a unit of current $-i$. Let these currents be added in a low-impedance discriminating circuit of sufficient accuracy to distinguish between one and two units of current. Then the outputs from the discriminating circuits properly combined with the outputs of the OR gates will indicate that there is an error in the address, block the final action, and notify the central control about the type and location of the error.

4.5 *Final Outputs*

If no errors in the address are indicated, the distributors proceed in producing the final output. In the central pulse distributor, the three groups of register cells have already prepared a path in the three stages of selection matrix (see Fig. 16). A properly shaped pulse is now applied at the apex of the matrix and finds its way to the selected output. As

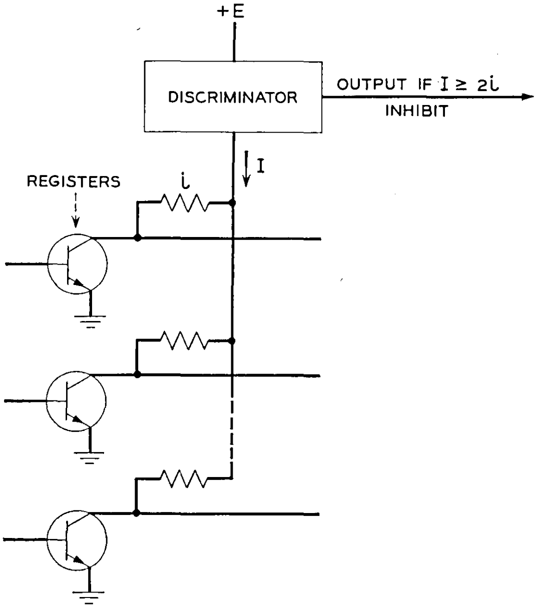

Fig. 15 — Error checking circuits for more than one error in CPD.

it proceeds through the final selection stage, a measurement of the pulse amplitude is made. If the amplitude is within the proper limits, an all-seems-well (ASW) signal is sent to the central control, indicating that the final action has been successfully completed. Absence of the ASW signal indicates either a missing or excessive output pulse. This causes the central control to initiate a trouble localizing or maintenance routine.

The final output element in the signal distributor is a magnetic latching relay. The pulses from the signal distributor have to be long enough and of the proper polarity either to operate or release the relay. The relay then will maintain this state until the next signal. There is no holding current required, which constitutes an appreciable power saving. The latching feature is obtained by making the armature of a mildly remanent material. The duration of the release current, however, must be sufficiently controlled to prevent a reversal of the field during release. A spare contact on the relay is used to verify the operation of the relay. It cuts in and out a shunt resistor, and the change in current is monitored at the apex (see Fig. 17) of the selection matrix. The proper change is interpreted as a successful operation and terminates the pulse to the relay.

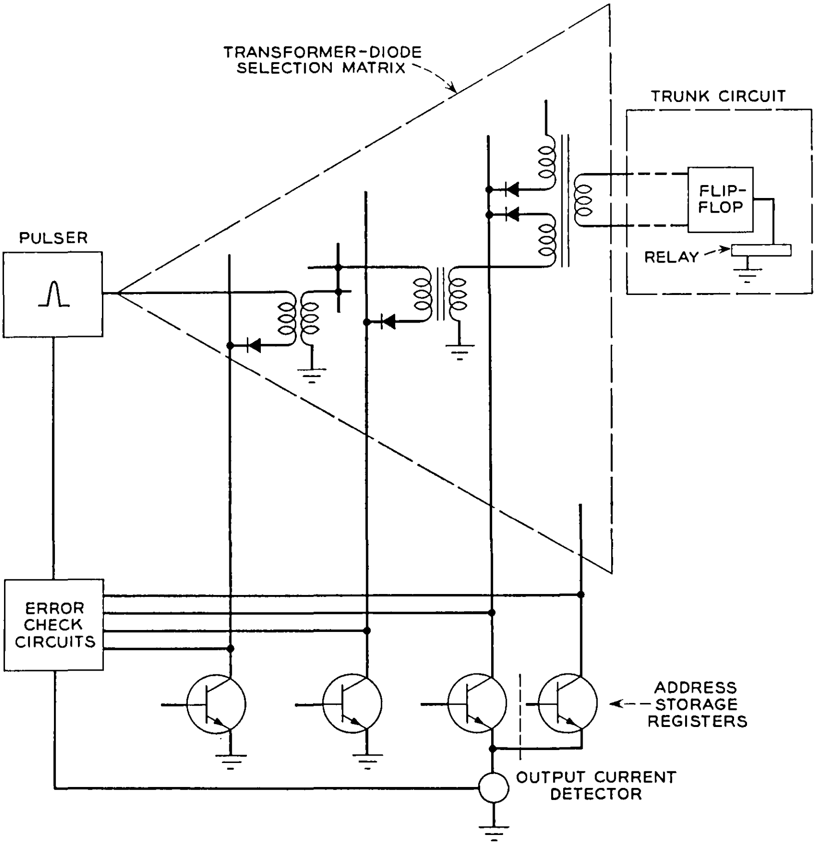

Fig. 16 — Selection in the CPD.

4.6 *Duplication*

The design of the distributors must provide sufficient reliability. A situation where failure of a component would disable the whole system cannot be tolerated.

To insure such reliability, duplication is employed. The central pulse distributors are always provided in pairs. The outputs are either connected together in such a way that either unit can send a signal to the remote point, or, when more than one output is needed for a function, the outputs are equally distributed between the two units. In the signal distributors, the control circuits are duplicated in such a way that either one of them can control all the outputs.

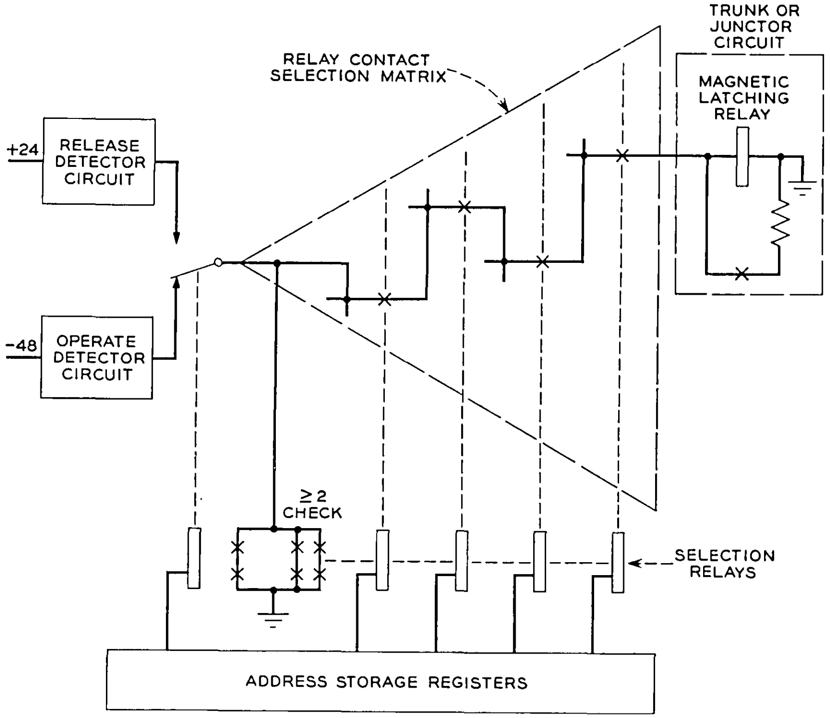

Fig. 17 — Selection and verification in the SD.

4.7 *Equipment Arrangement*

The signal distributors are incorporated in junctor and trunk frames with the magnetic latching relays located in the individual trunk and junctor units. The duplicated control equipment, comprising electronic packages, mercury-wetted contact relays, and wire spring relays, occupies one half of an ESS rack and is shown in Fig. 18.

The central pulse distributors are in their own frames, which also include peripheral bus signal repeaters. A typical central pulse distributor is shown in Fig. 19.

Equipment design details are described in associated articles.[3,6]

4.8 *Conclusion*

The basic principle of No. 1 ESS has been to minimize the varieties of subsystems, while providing the necessary functions in the most econom-

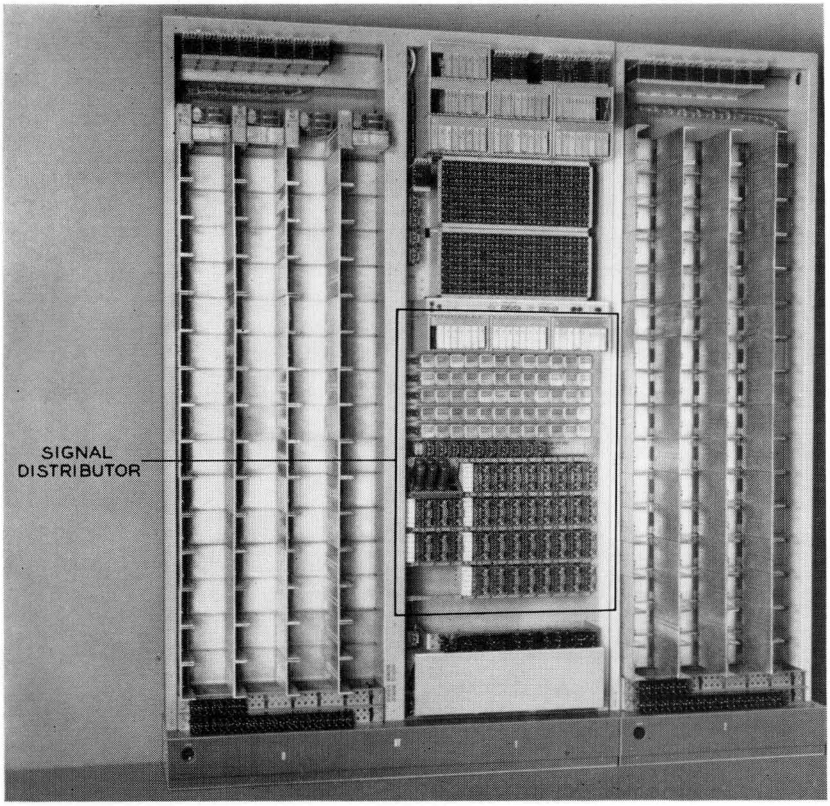

Fig. 18 — Signal distributor in trunk frame.

ical manner. The division of the action subsystems into two categories — signal and pulse distributors — which was dictated at the time of development by the existing state of the art, does indeed provide the necessary functions in the most economical manner.

V. ACKNOWLEDGMENTS

The design and development of the peripheral units described above required the efforts of many people outside the electronic switching area. Particular thanks are expressed to J. A. Baldwin, who collaborated in the ferrod conception, and to H. J. Wirth and R. F. Glore, who contributed the mechanical design of the ferrod. Thanks are expressed to F. P. Balacek, T. G. Grau and A. K. Spiegler for their development of the magnetic latching relay. Within the electronic switching area of Bell

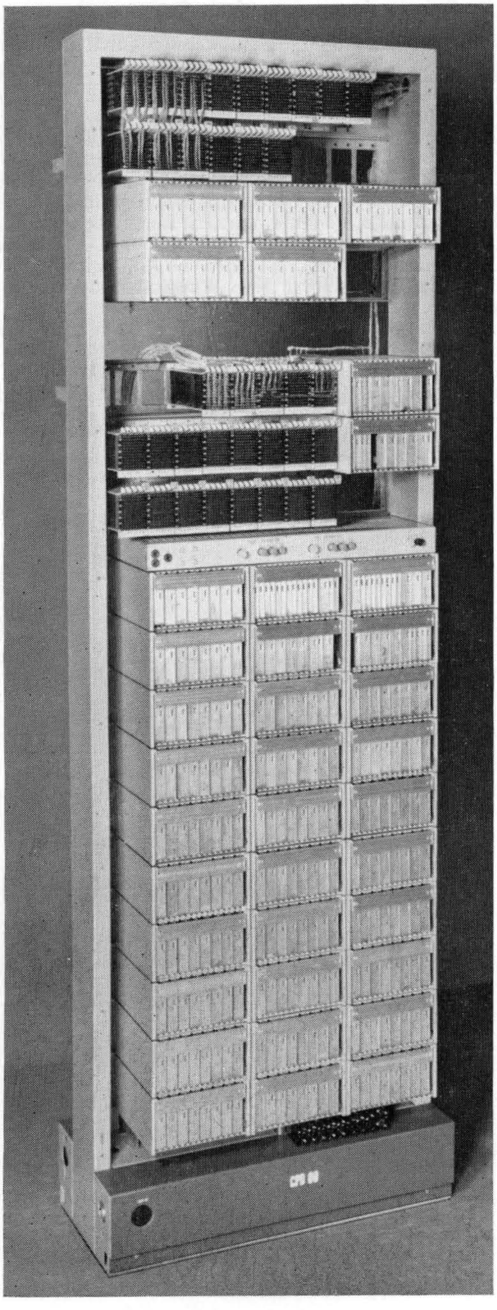

Fig. 19 — Central pulse distributor.

Laboratories, the fine equipment engineering and the unstinting cooperation of many other members of technical staff and technical aides made these developments possible.

REFERENCES

1. Danielsen, D., Dunlap, K. S., and Hofmann, H. R., No. 1 ESS Switching Network Frames and Circuits, B.S.T.J., this issue, p. 2221.
2. Dougherty, H. J., Ridinger, P. G., Raag, H., and Stockert, A. A., Line, Trunk, Junctor and Service Circuits for No. 1 ESS, B.S.T.J., this issue, p. 2321.
3. Ferguson, J. G., Grutzner, W. E., Koehler, D. C., Skinner, R. S., Skubiak, M. T., and Wetherell, D. H., No. 1 ESS Apparatus and Equipment, B.S.T.J., this issue, p. 2355.
4. Connell, J. B., Hussey, L. W., and Ketchledge, R. W., No. 1 ESS Bus System, B.S.T.J., this issue, p. 2021.
5. Baldwin, J. A., A Magnetic Device for High-Speed Sensing of Small Currents, AIEE Transactions, Part I, Communications and Electronics, March, 1961.
6. Chevalier, J. G., and Eisenhart, R. K., No. 1 ESS Circuit Packs and Connectors, B.S.T.J., this issue, p. 2441.

No. 1 ESS Master Control Center

By H. J. DOUGHERTY, H. RAAG, P. G. RIDINGER
and A. A. STOCKERT

(Manuscript received January 21, 1964)

The No. 1 ESS master control center (MCC) serves as the interface between the switching system and operating telephone company personnel. It includes facilities for system test and control, alarm indication, maintenance of lines and trunks, recording customer billing information, and writing information on program store memory cards. The MCC is thus the central maintenance, control, and administration point of No. 1 ESS; it can be functionally divided as follows:

(a) maintenance teletypewriter (TTY) facilities, the primary communication facilities between the system and operating company personnel. Other TTY channels provide for communication between the system and a number of other operating company areas (such as traffic measurement, line assignment, etc.). The description of all of these TTY channels is included.

(b) alarm, display, and control circuitry to provide continuous indication of system status and permit maintenance personnel to control the system.

(c) trunk and line test (TLT) facility provided for maintenance of trunks, lines and service circuits. Included are facilities for dc loop testing, transmission testing, circuit make-busy, handling permanent signals on lines, etc.

(d) automatic message accounting (AMA) facility, providing a magnetic tape record of all data related to billing customer calls. The tape is processed in an accounting center to determine the customer charges.

(e) program store card writer used for periodically updating the program store translation information. This machine is described in a companion paper.

I. TELETYPEWRITER FACILITIES IN NO. 1 ESS

1.1 *Introduction*

To maintain and administer the No. 1 electronic switching system (ESS), communication facilities must be provided to exchange information between the switching system and operating company personnel. The flexibility and self-diagnostic features of No. 1 ESS are exploited fully[1,2,3] and result in an especially large volume of information exchange for effecting changes in subscriber service, reporting trouble conditions, etc. This makes it essential that the communication facility be flexible and convenient to use. The teletypewriter, together with the No. 1 ESS stored program and large memory capacity for storage of input and output messages, meets these requirements. Other major factors which influenced the adoption of the teletypewriter as the principal communication link with No. 1 ESS were:

(a) the teletypewriter is a standard device and relatively reliable because of the vast amount of development work already done in this field;

(b) the teletypewriter, with a standard English keyboard, lends itself readily to the large number of input-output messages required in maintaining and administering a large system such as the ESS;

(c) no particular training is required to use a teletypewriter for the vast majority of input messages to the ESS;

(d) the translation of English or English mnemonics to binary and vice versa is a relatively easy task for the ESS.

Keys and lamps are also provided as input-output devices for certain special or highly repetitive but simple functions.

1.2 *Maintenance Teletypewriters*

The two primary teletypewriter channels provided in the ESS are associated with the master control center (MCC). One of these teletypewriters serves as the basic communications channel between the ESS and maintenance personnel for normal everyday use. This machine is permanently mounted as part of the MCC; see Fig. 1. The second teletypewriter associated with the MCC may be located near the MCC or in some remote maintenance center or maintenance bureau. This second teletypewriter will always be located at some remote attended point if the central office is to be unattended at any time. This machine, besides serving as a communications channel for the maintenance men, also serves as the alarm broadcasting facility for the unattended office.

The normal output messages from the system will consist of alarm indications of various types, messages indicating troubles within the system, results of any self-diagnosis resulting from detected troubles within the system, and traffic overload conditions, as well as answers to questions asked of the system by the maintenance men.

Input messages to the system are of two general categories. First, the maintenance man may interrogate the system concerning a number of

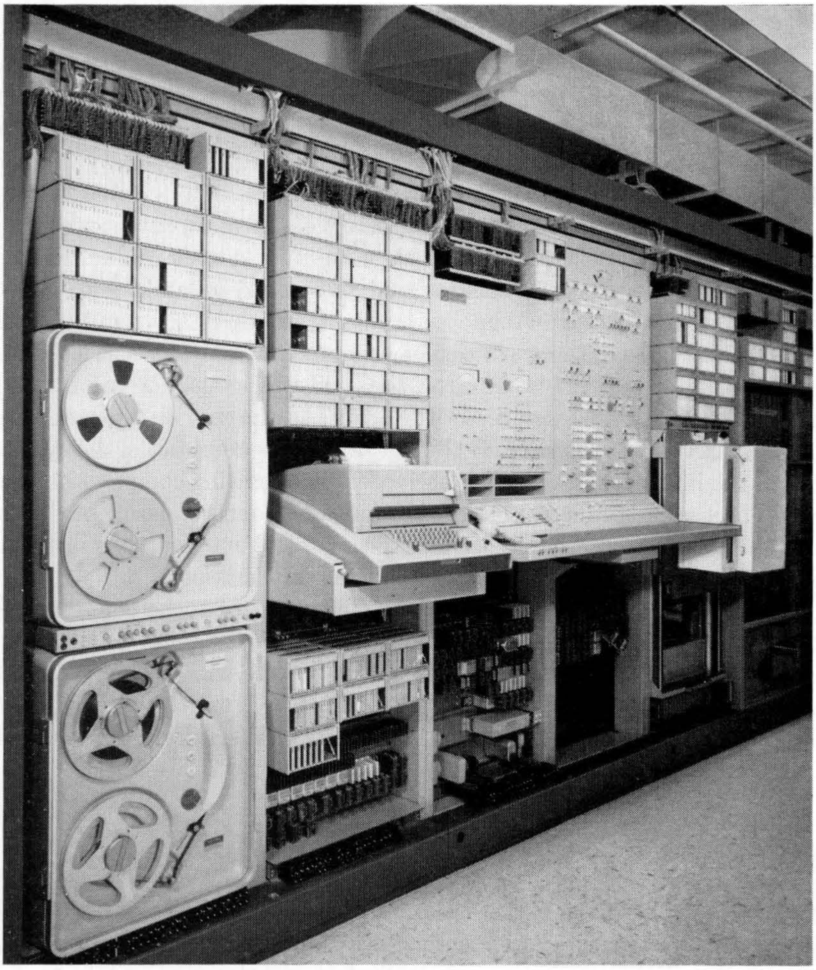

Fig. 1 — No. 1 ESS master control center.

specific areas. That is, he may ask the system to print out the contents of a particular memory location or to trace a call through the network from a particular line or trunk. He may also ask the system for the information in its memory concerning a particular line or a particular trunk. That is, he may give the system, for example, a directory number and ask the system to print out the equipment number that the directory number is associated with and all other information the system has pertaining to that directory number. Second, the switchmen may order the system to perform a diagnostic test on some part of the system.

1.3 *Service Order Teletypewriters*

A teletypewriter arrangement is also provided as the input channel for service order information. In this arrangement a teletypewriter tape reader is located in a remote service order bureau or any other location convenient for operating company personnel. This ESS teletypewriter channel accepts service order information in the field-oriented format used by any operating company. On receipt of the teletypewriter signals, the ESS edits the service order information insofar as it is able. For example, if a service order indicates that a directory number is to be assigned to a new customer's line and, in fact, the directory number is already in use, the system will detect this error. When any service order information appears to be in error, the ESS will ignore the information and will indicate the existence of the error and the service order number on the MCC teletypewriter. If the information is acceptable, the system stores the information until it is activated by operating company personnel. The service order is activated when telephone company personnel dial the service order number over a special telephone line, thus instructing the system to start using the translation information.

Provision is also made for another teletypewriter to be connected to this service order input channel and located near the main frame in the central office. When provided, this teletypewriter will receive the same service order information as received by the ESS from the remote point. The copy from this machine can then serve as the service order for main frame cross wiring.

1.4 *Traffic Usage Teletypewriter*

Another teletypewriter arrangement is provided in the ESS for indicating the contents of a large number of traffic usage registers. These traffic registers in the ESS memory are functionally analogous to the mechanical traffic registers used in all electromechanical switching systems. This traffic usage teletypewriter may be located at any point remote from the ESS. The ESS is programmed to identify each of these registers on the remote teletypewriter and to indicate its contents in summarized form. These register counts are reported periodically on the remote usage teletypewriter: the contents of some registers will be reported every half hour. In other cases, depending upon their function, some registers' contents will be reported every four hours.

This teletype channel and the associated ESS program are also arranged to permit traffic administrative personnel to interrogate the system concerning the contents of specific registers. Certain traffic overflow conditions encountered are also reported on this teletypewriter.

1.5 *Line Trouble Teletypewriter*

The final teletypewriter arrangement provided in ESS serves three purposes. This one-way channel is utilized by the system to transmit information to a remote maintenance bureau concerning permanent signals on lines, the results of automatic line insulation testing (ALIT) and the results of tests performed on pressurized cable contactor pairs. Permanent signal information is normally transmitted by the system periodically on a timed interval. However, in the event a large number of permanent signals occur in a short time, a printout is initiated as soon as information on them has been collected. The results of the ALIT tests and cable contactor tests are printed whenever failure information is available.

1.6 *Call Store Buffer*

In communicating with peripheral units, central control is able to transmit or receive a multibit word every 11 μsec.[1] By contrast, the teletypewriter can send or receive information at only one bit every nine msec. To bridge this speed barrier, a call store buffer is provided. The functional form of the buffer and its relation to the teletypewriter channels are shown in Fig. 2. It consists of two stages: a first stage provided on a per-channel basis and a second stage common to all channels.

The first stage of the buffer includes the teletypewriter channel buffer (TCB) and the teletypewriter channel control (TCC) registers. These registers are used to assemble and process both input and output messages. The TCB register can store up to 60 TTY characters. This corresponds to one line of type from the teletypewriter. As each incoming character is received from the teletypewriter, it is deposited in the TCB register by the control program. After the complete message has been assembled, it is withdrawn from the TCB register, converted to ESS machine language, and delivered to the proper client program. Records necessary for administering the TCB register are stored in the associated TCC register.

The second stage of the buffer is used as an assembly area for outgoing messages and is designated the "outgoing message buffer area" (OMBA). Records for the administration of the OMBA are kept in its administration area (AA). The OMBA has a capacity of 200 24-bit words. It contains two kinds of entries: a client request (CR) register for every output message and a data entry for clients requiring data storage. The destination channel, priority, and other output message information is stored in the CR register.

An output message from a client program is stored in the OMBA until

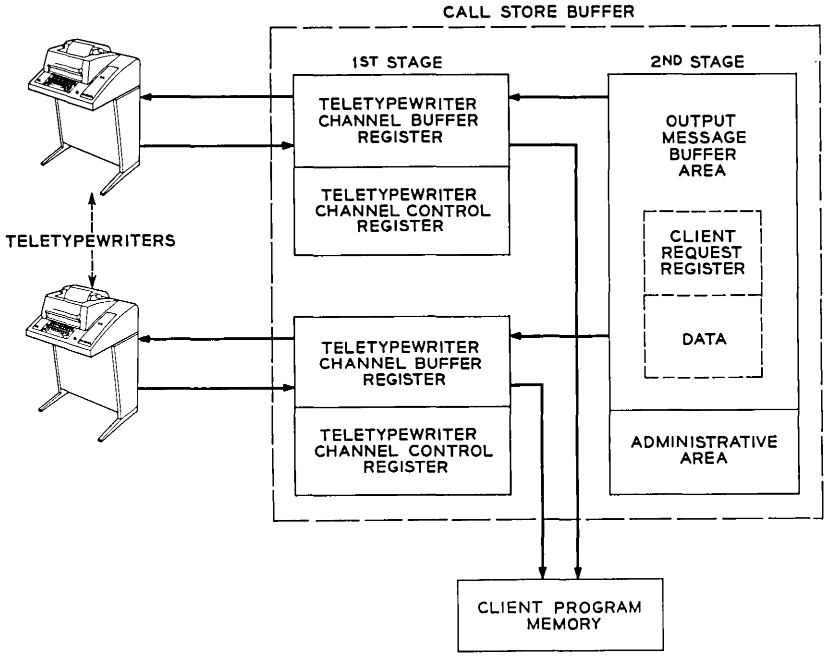

Fig. 2 — Call store buffer.

the desired destination channel is available. The message is then converted into TTY characters and loaded into the TCB register. Every 100 msec, the control program transmits a character stored in the TCB register to the teletypewriter. As this process continues, new characters are placed in the TCB register until the output message is completed.

1.7 *Input Message Control*

A special group of characters is used to instruct the program as to the proper treatment to be given each input message. Since these characters have control significance, they may not be used in the body of an input message. A partial list of the control characters and a brief description of the function of each are given below.

Dash (-): the dash is used as a part of the message identification code which precedes each input message to specify its destination and treatment. The message identification code consists of as many as 13 noncontrol characters and two dashes. The second dash indicates the end of the message identification code.

Execute (.): a period is typed at the end of each line to tell the program to execute that portion of an input message. The contents of the TCB register are then transferred to the client's memory and the carriage is returned to the left margin in preparation for the next input or output.

Checkput (?): the checkput is a printback of an input message that has just been typed. It is used to check that the No. 1 ESS has properly received the input message. The checkput is requested by typing a question mark at the end of each line of input message. If the printback is satisfactory, a period is typed at the end of the line to tell the program to execute the message.

Backspace (←): the backspace character is used to correct typing errors. Each backspace that is sent causes the program to discard the last character stored in the TCB register. The program also moves the carriage one space to the right so that the correct character can be printed to the right of the incorrect character.

Begin again (↑): this character is used to correct a full line of type. In this case, the program discards the entire contents of the TCB register and then returns the carriage to the left margin so that a new line may be typed.

Abandon message (@): input messages that have not been terminated by typing the execute character may be discarded by typing the abandon message character. In this case, the program returns the channel to the idle state and ignores the preceding message.

After each input message is typed in, a two-character acknowledgment is printed out by the program. The acknowledgment appears on the same line as the input and indicates what action has been or will be taken by the No. 1 ESS. Finally, after each complete input or output message, the program sends at least three nonprint characters to the stunt box (see Section 1.8), which repositions the carriage and unlocks the keyboard for the next input or output message.

1.8 *The Model 35 Teletypewriter*

The Teletype Corporation Model 35 teletypewriter has been adopted for use with No. 1 ESS. This newly developed machine has a four-row keyboard similar to the standard office typewriter. It operates at 100 words per minute using a new seven-bit code based on the American Standard Code for Information Interchange (ASCII) recently approved by the American Standards Association. Sixty-four code combinations are assigned to letters of the alphabet, numbers, and symbols; thirty-five combinations are used for control purposes; and the remaining twenty-nine combinations are unassigned.

The line signals generated and received by the Model 35 teletypewriter are shown in Fig. 3. Each seven-bit character is transmitted with a start bit, an unused bit, and two stop bits. Since the nominal bit interval is 9.09 msec, one character may be sent every 99.99 msec.

Like its predecessors, the Model 35 teletypewriter is equipped with a stunt box which is able to decode certain teletypewriter characters and activate a set of contacts. In No. 1 ESS, these contacts provide a convenient method of controlling external relay equipment. For example, the stunt box is used to actuate audible and visual alarms in the maintenance center when alarm messages are transmitted to the remote maintenance teletypewriter.

The Model 35 teletypewriter may also be equipped with an answer-back circuit. When triggered by a stunt box contact, this circuit sends a unique sequence of characters back over the signal line as an indication that the machine is able to transmit and receive information.

1.9 *The Transmit-Receive Unit*

Since the No. 1 ESS is a word-organized system, information is transferred between functional units in parallel form. To permit communication with the teletypewriter which sends and receives serial information, a transmit-receive (TR) unit is interposed between the central control and the teletypewriter. The TR unit accepts parallel information from central control and transmits it serially to the teletypewriter. Conversely, the TR unit receives serial information from the teletypewriter and converts it to a parallel form acceptable to central control.

The functional form of the TR unit is illustrated in Fig. 4. Serial-to-parallel or parallel-to-serial conversion of each TTY character is carried out by means of a shift register. Since full-duplex operation is not required, the same shift register is used both to transmit and receive information.

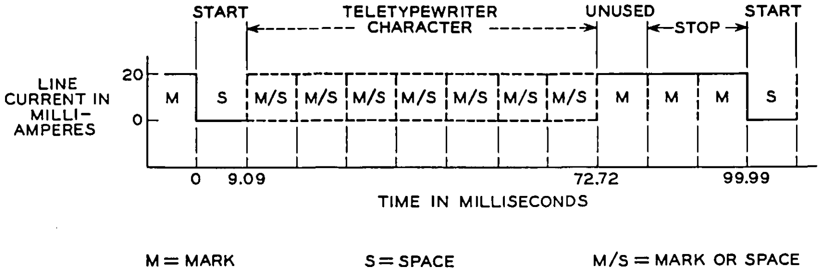

Fig. 3 — Model 35 teletypewriter line signals.

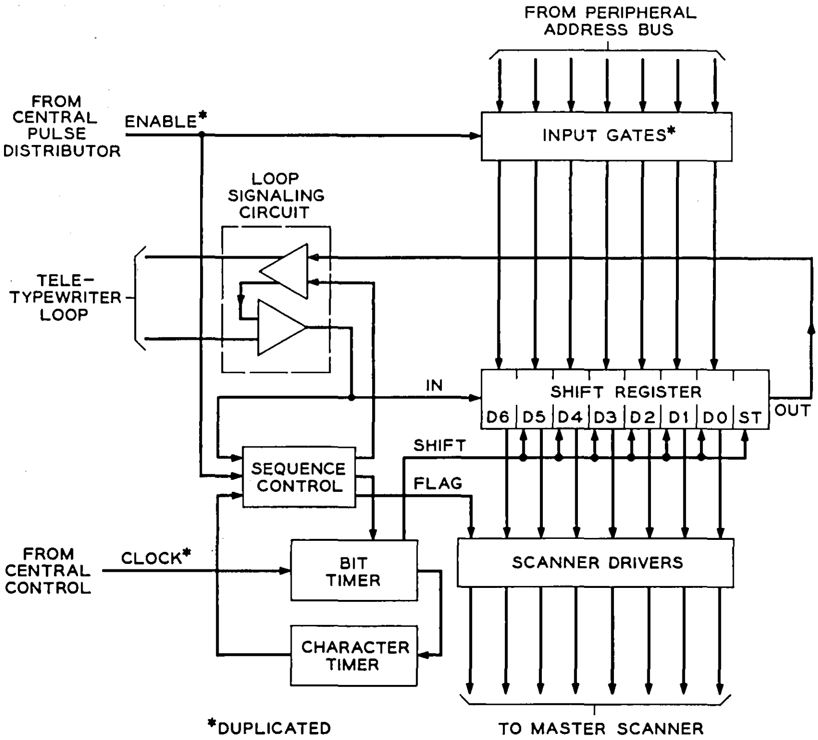

Fig. 4 — Transmit-receive unit.

The TR unit must also generate timing signals which define the duration of each bit and the end of each seven-bit character. This timing information is derived by counting down a clock signal supplied by central control every 71.5 μsec. These clock signals drive a binary counter (designated the "bit timer") which is arranged to recycle after 127 clock pulses or 9.085 msec. Each time the bit timer recycles, it increments another binary counter (designated the "character timer") which in turn recycles after the start bit and seven character bits have moved into or out of the shift register.

Parallel information from central control is delivered to the TR unit via the peripheral address bus (PADB).[4] Central control is able to transmit to the TR unit over either PADB by enabling the appropriate set of input gates. The enable signals are supplied from the central pulse distributor[5] over two private wire pairs.

Serial information from the teletypewriter is temporarily stored in the shift register and is available to central control via scan points in the master scanner.[5] The teletypewriter sends and receives information in the form of mark and space signals which appear on the signal line as 20 ma of current or zero current respectively. These signals are generated and detected in the TR unit by a transistorized loop signaling circuit. The detector has a decision threshold of 10 ma and a low-pass filter in its input to reject high frequency noise.

The operational sequences normally carried out by the TR unit are initiated by external signals received from either the central control or the teletypewriter. Resulting actions inside the TR unit are governed by the sequence control.

1.9.1 *Normal Operation*

1.9.1.1 *Receiving Sequence.* A receiving sequence is initiated by a start signal from the teletypewriter, which is detected by the loop signaling circuit. The sequence control times for half a bit interval and then samples the line signal. If the line signal is now a mark, the preceding space signal is interpreted as a hit due to line noise and the TR unit returns to its normal state. On the other hand, if the line signal is still a space, it is accepted as a legitimate start signal and the TR unit flags central control. At the end of the start bit and each successive bit, a shift pulse generated by the bit timer gates the line signal into the register and shifts each bit in the register to the next higher stage. At the end of the seventh character bit, the character timer recycles and the sequence control deactivates the flag ferrod, indicating to central control that a full character has been received. The sequence control then times for two more bit intervals, after which it returns to the idle state. During the receiving sequence, the TR unit inhibits the input gates from the PADB to prevent an improper read-in from the central control due to a false enable signal.

Central control scans the TR flag every 25 msec; after detecting the flag rise and fall, it interrogates the scan points which monitor the seven character bits stored in the shift register. The full TTY character remains stored in the shift register from the end of the seventh character bit until the end of the next start bit. After the character is read out, it is placed in a buffer register in the call store until the full input message is assembled.

1.9.1.2 *Transmitting Sequence.* Output messages are transmitted by the central control to the TR unit at the rate of one character every 100 msec. A transmitting sequence begins with an enable signal from central control. The seven character bits are gated into the shift register and an enable verify signal is returned to central control.

The sequence control now takes charge of the TR unit and begins to transmit information serially to the teletypewriter. The output of the last stage of the shift register is gated to the loop signaling circuit and the start bit transmitted by sending a space signal for 9.085 msec. Then each of the seven character bits is gated to the loop signaling circuit by a series of shift pulses generated by the bit timer.

The loop signaling circuit transmits a mark or space signal, depending on whether a one or a zero is stored in the last stage of the register. After each bit is applied to the signal line it is gated back into the first stage of the register. Thus, by recirculating the transmitted character, central control is able to check the TR unit's ability to properly transmit information.

After the last character bit is transmitted, the character timer recycles and the shift register is disconnected from the loop signaling circuit, leaving the signal line in a continuous marking condition. The sequence control times two more bit intervals and then returns to the idle state. During the transmitting sequence the input gates from the PADB are again inhibited to protect the information in the shift register from mutilation by a false enable signal.

Although teletypewriter signals can flow in only one direction at a time, there is still the possibility of simultaneous seizure of the TR unit by both the teletypewriter and central control. In this case, the TR unit favors the teletypewriter by permitting the start signal to override the enable signal from central control. The TR flag is activated and central control is able to defer its output message until the input message is completed. This same provision permits the maintenance man to interrupt central control at any point in a transmitting sequence simply by depressing the break key at the teletypewriter. This action produces a long space signal which fills the shift register with zeros and is recognized by central control as a request to send an input message. After the input message is received, central control resumes sending the output message previously interrupted by the break signal.

1.9.2 *Trouble Detection*

Central control periodically checks the TR unit's ability to transmit information by comparing the recirculated character with the character previously transmitted. If a discrepancy is found, central control activates a central pulse distributor point which places the TR unit in the quarantine mode. This mode is designed to permit fault recognition and diagnosis. While in quarantine, the TR unit is divorced from the teletypewriter, although the recirculation path is maintained and continuous marking current is supplied to the signal line. Five of the seven scan points that normally monitor the shift register are reassigned to critical points in the character timer and sequence control. The other two scan points continue to monitor the fourth and seventh stages of the shift register. Central control may then initiate a transmitting sequence and observe changes of state in the sequence control, recycling of the character timer, and signal flow through the shift register.

The ability of the TR unit to receive information is also checked on entering the quarantine mode by momentarily opening the input to the loop signaling circuit. The TR unit interprets this action as a valid start signal and executes a receiving sequence. At any time during a diagnostic routine, central control may monitor the full content of the shift register by returning the TR unit to its normal mode.

Fuse alarms, power removal, and abnormal supply voltage conditions are also reported to central control by means of scan point indications. During idle periods, central control may check the supply voltage monitors by artificially inducing high- and low-voltage conditions.

1.10 *The 105A Data Set*

Most of the teletypewriters associated with No. 1 ESS will be located at points remote from the central office. The permissible distance between the teletypewriter and its associated TR unit would normally be limited by the loop resistance of the connecting cable pair. To overcome this restriction, the dc teletypewriter signals are converted to ac tones by 105A data sets which are interposed between the teletypewriter and the TR unit as shown in Fig. 5.

Each data set consists of a frequency-shift modulator and demodula-

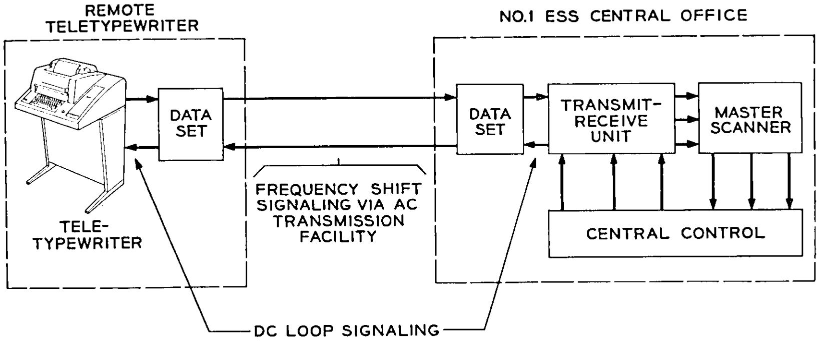

Fig. 5 — Remote teletypewriter channel.

tor. The modulator converts dc loop current or the absence of current into a continuous mark or space frequency. The demodulator detects the mark or space frequency and converts these signals to dc loop current or the absence of current. The data sets are arranged to transmit and receive in two different frequency bands, thereby allowing transmission in both directions simultaneously.

The strength of the carrier signal received by each data set is continuously monitored as an over-all check of the communications channel. If the received carrier falls below a predetermined level for more than 400 msec, the data set will change to its disconnect state and send a 750-msec space signal to the other data set. After timing the long space signal, this set will also change to the disconnect state. The loss of carrier is reported to the No. 1 ESS by means of a scan point in the master scanner activated when the data set is in the disconnect state. Loss of carrier on the remote maintenance channel is also reported as a major alarm by the data set in the attending maintenance center.

A special provision in the remote maintenance channel is the means to report a catastrophic failure of No. 1 ESS even though the system is unable to transmit an output message. In this case, the emergency-action timeout circuit in central control releases a relay which opens the transmission path between the two data sets. The subsequent loss of carrier is detected and reported as a major alarm by the data set in the maintenance center.

II. ALARMS, DISPLAYS, AND CONTROLS IN NO. 1 ESS

2.1 *Introduction*

The primary medium of communication between No. 1 ESS and maintenance personnel is the maintenance teletypewriter channels described in the previous section. When the system maintenance program detects a trouble, it diagnoses the unit and reports the location of the failure to the maintenance personnel via the maintenance TTY. After repairing the unit, maintenance personnel use the maintenance TTY to instruct the system to return the unit to service.

TTY communication, however, is not dependable when the system loses its self-organizing capability. When this occurs, the need to exert control over the system is imperative. To provide for this need, controls and displays are provided in No. 1 ESS equipment frames and on the alarm, display, and control panel at the master control center. An alarm system is used to alert maintenance personnel and direct them to the proper location for receiving data about the nature of the failure.

2.2 *Office Alarm System*

For any one floor in a building, the office alarm system (see Fig. 6) consists of an aisle pilot unit with a major alarm lamp for each equipment aisle, a group of three lamps for each main aisle, a vertical lamp holder near the exit with one lamp for each of the other floors in the building, and a panel containing four audible alarms and relay control equipment. Of the three lamps in the main aisle group, one is the main aisle pilot. This lamp indicates trouble in an equipment lineup off that main aisle. The remaining two are the "other floor lamps." These indicate the existence of troubles on other floors. The audible signal for major alarms is a tone bar and for minor alarms is a telephone ringer.

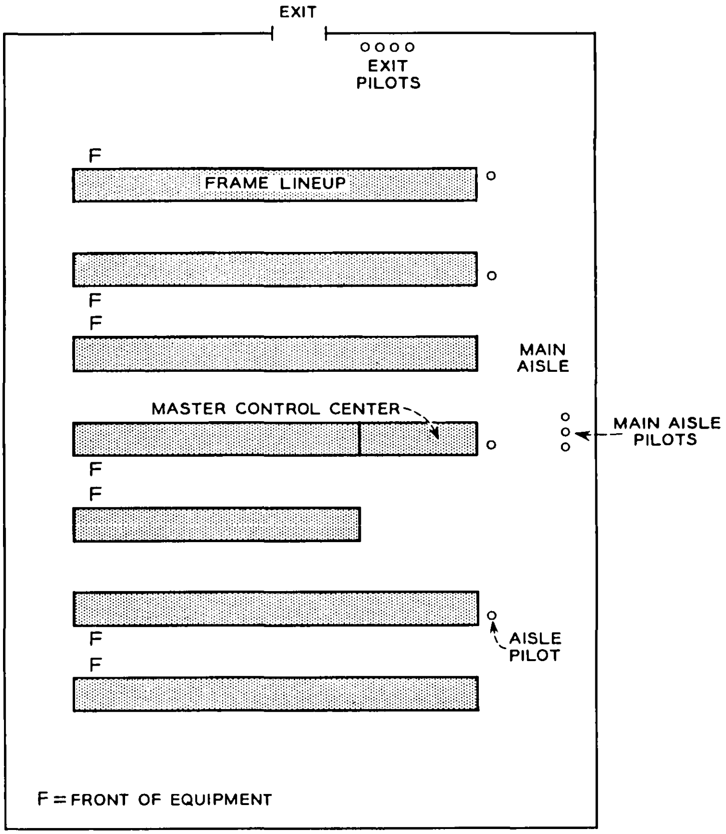

Fig. 6 — Office alarm layout.

The power room equipment does not contain a series of locating lamps, since it has its own alarm circuit providing both major and minor alarms. It is tied into the office alarm system, however, to the extent that for major alarms it lights the appropriate other floor lamp and rings a distinctive audible alarm on all floors. For a minor power alarm, it lights the appropriate other floor lamp and rings the regular minor alarm bell on the floor where power alarms are normally supervised. Either major or minor power alarms cause a separate exit lamp on each of the floors to light.

The office alarm system also contains an alarm circuit to indicate a failure in the supply that powers the alarm circuits themselves. A failure in the fuses that supply the alarm circuits causes a distinct audible alarm to be sounded, immediately indicating to the maintenance man the precise nature of the failure.

Each No. 1 ESS subsystem reports fuse failures via the office alarm system. Lamps located on the frame indicate the nature of the trouble. The maintenance programs, the most powerful diagnostic facility in No. 1 ESS, have access to the office alarm system at the MCC. When the program completes diagnosing a unit, it reports the failure to the MCC, which causes a signal to be placed on the alarm system. The maintenance personnel retire the alarm at the MCC and receive the dictionary printout[3] from the teletypewriter.

No. 1 ESS alarms are transferred to a distant office using a teletypewriter loop. The teletypewriter at the receiving office is integrated into the office alarm system by using teletypewriter stunt box contacts to activate remote alarms.

2.3 *Alarm, Display and Control Panel*

The alarm, display and control panel (see Fig. 7) is the centralized control point for No. 1 ESS. Lamps provide an over-all indication of the system status. Keys and pushbuttons provide means of exerting direct control over the system and its program. For convenience, this panel is divided into four sections. Each section will be described separately.

2.3.1 *System Status Display*

The lamps in this group display the status of individual units as classes of units. Whenever a trouble occurs, the maintenance man can quickly ascertain the seriousness of the failure by glancing at the lamp displays. Each central control has two lamps: one, labeled "TBL," lights when the unit is in trouble; the other, labeled "ACTIVE," lights when the unit

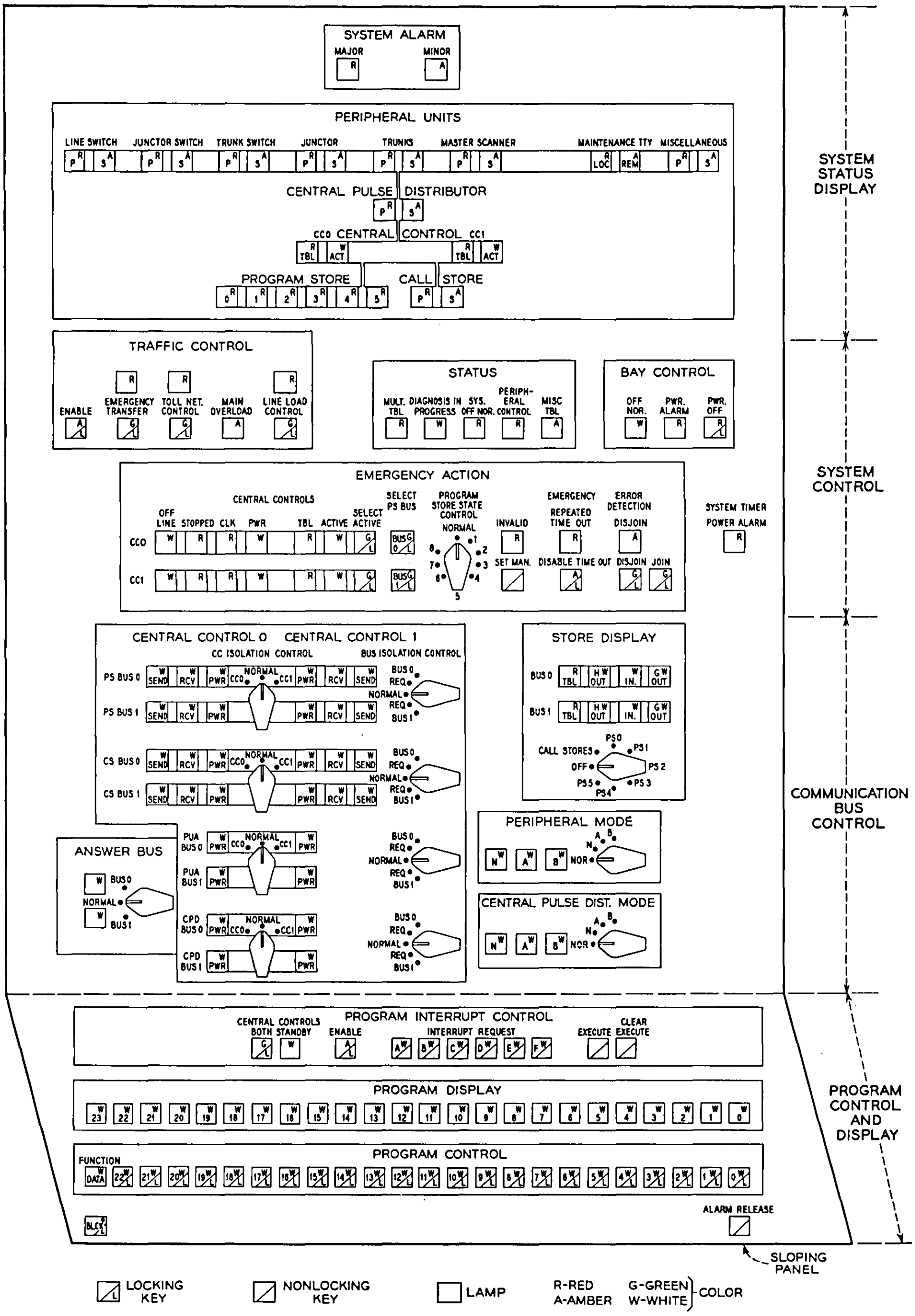

Fig. 7 — Alarm, display, and control panel.

is in active status. Each program store has a lamp that lights when the store is out of service. Two lamps are provided for line switch frames. The primary lamp P lights when both scanner controllers or both network controllers are in trouble in some line switch frame. The secondary lamp S lights when one scanner controller or one network controller is out of service in some line switch frame. Similar considerations apply to the other groups of units. In the call stores, the primary lamp lights when both copies of some information block are no longer available. The secondary lamp lights when only one copy of some information block is unavailable.

2.3.2 *System Control*

The system control is used to restore rudimentary self-adaptive capability to the system when the maintenance programs[3] cannot effectively restore order. The first indication that the system has lost program control comes when an emergency-action alarm is given. This alarm indicates that the system program has not passed prescribed check points within a given time interval. If this alarm is repeated several times (as indicated by the "REPEATED TIME-OUT" lamp), the system is deemed to have lost control. For instance, the system clock may have failed and a switch of central controls cannot be effected. When maintenance personnel are faced with this situation, they must take control over the system. Control is assumed via the "emergency-action" controls. Via these controls, the maintenance man can force a configuration of central controls and program stores, the basic data processing units in the system. He then starts the program. The program then attempts to recover an operational system. If the program cannot reestablish control it will again time out. Maintenance personnel then force a different configuration. This is repeated until the program establishes control.

Associated with the emergency action controls are lamps to provide feedback to the maintenance man. Points monitored include the clocks, power, active status, stopped, and trouble flip-flops in each central control.

2.3.3 *Communication Bus Control*

The keys and lamps in this group are used to control the interframe bus systems[4] and display their status. The lamps in this group display how the central controls (CC) are associated with the duplicated buses for program stores (PS), call stores (CS), peripheral units (PU) and central pulse distributors (CPD). For each CC, lamps indicate whether the

CC is transmitting to and/or receiving from the appropriate bus system. Each CC can also be isolated from any or all bus systems. Such control is desirable when the systems must be "split" for special test purposes. The buses can be isolated from each CC by operating the appropriate "BUS ISOLATION CONTROL" switch. Before control is applied the switch passes through an intermediate "REQ" position. This position, which is monitored by a scan point, gives the program an opportunity to mark the bus in trouble and take it out of service. This allows an orderly shutdown of the bus system.

2.3.4 *Program Control and Display*

Since the "software" in No. 1 ESS is significant in the operation of the system, some control over it is necessary. There exists a class of programs — system initialization, for instance — instituted by the maintenance man in emergency circumstances. The system can be forced into a number of these programs by operating the "program interrupt" keys.

The "program control" keys are used to insert data into the system. Conversely, the system can be requested to display data on the "program display" lamps. The program control keys are also used to control blocks of programs when the system program is being modified.

III. TRUNK AND LINE TEST PANEL

3.1 *Introduction*

The trunk and line test (TLT) panel, in conjunction with the MCC TTY, provides central office maintenance personnel with a facility for maintaining interoffice trunks, lines, and service circuits (e.g., dial pulse receivers, multifrequency transmitters, etc.).[6] The inherent ability of No. 1 ESS to perform logical actions under direction of a stored program suggests that the facility design should include a minimum amount of hardware. In general, the simplicity and flexibility of design in the TLT panel was obtained by exploiting the following:

(a) Compared to electromechanical switching systems, No. 1 ESS permits simplified trunk circuit design and, consequently, more trouble-free operation. Also, the types of trunk circuits required in the largest numbers are designed as plug-in modules for easy maintenance.

(b) No. 1 ESS is programmed to make a number of per-call checks on trunk circuits and service circuits in the process of handling a call. This arrangement allows the system to report circuits causing trouble via the maintenance TTY.

(c) If No. 1 ESS encounters trouble with a particular service circuit or trunk in the process of handling a call, it can in many cases complete the call by using another circuit and then determine the nature of the trouble and report it to the maintenance man via the TTY.

(d) Part of the simplicity in trunk circuit design stems from the fact that outgoing trunk (OGT) test jacks are not provided on a per-trunk basis. Test access to any trunk or service circuit is obtained by a switched connection through the switching network.

(e) Entire test sequences can be stored in the system program for various circuits and be rapidly initiated by the maintenance man from the TLT panel. The system can also be told to mark a trunk or service circuit busy in the memory, and consequently a make-busy key or jack per trunk is not required.

3.2 *General*

The TLT panel in conjunction with the local maintenance TTY adjacent to it serves as the major tool for the central office personnel for maintaining trunks and lines. The keys and lamps on the TLT panel are used for those tests and messages which occur most frequently in the course of maintaining trunks, lines, and service circuits. The same messages could as well be transmitted by the TTY, but the TLT panel provides a more rapid means of communication.

The block diagram in Fig. 8 shows the basic relationship between the TLT panel and the system. The equipment arrangement is shown in Fig. 9. A TOUCH-TONE key set, mounted on the key shelf, is used to transmit all information to the system. The output of the TOUCH-TONE key set reaches the system via the master test line (MTL) which appears as an ordinary TOUCH-TONE line on the switching network with a special class of service. The keyed information may consist of a trunk or service circuit number, a trunk number and a directory number to be outpulsed, etc. Once a trunk, line, or service circuit has been identified to the system via the MTL and the maintenance man has received appropriate supervisory or status indications (e.g., busy, idle, etc.), he can then exercise any of the test and maintenance features provided in the TLT panel.

3.3 *Trunk and Line Test Panel Features*

Trunk make-busy — If the maintenance man identifies an outgoing trunk by keying the proper identity number over the MTL, he can then, if the trunk is idle, operate a make-busy key to instruct the system to mark that particular trunk "maintenance-busy" in its memory. As long

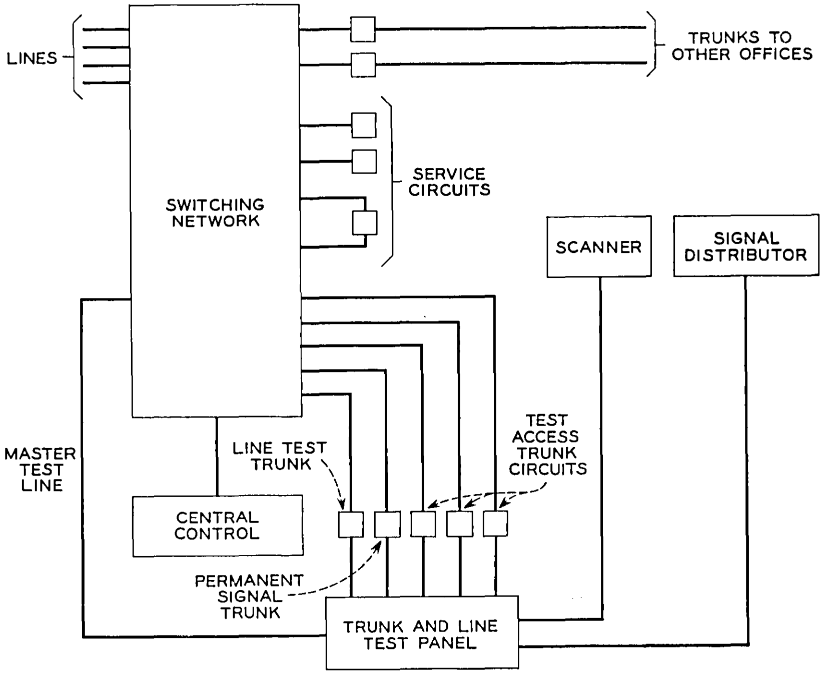

Fig. 8 — Block diagram showing basic connections between TLT panel and ESS.

as the trunk is marked "maintenance-busy," the system will not use the trunk for normal traffic. However, a connection can be established between the trunk and the TLT panel for test purposes. If the maintenance man identifies a trunk that is already in the "maintenance-busy" state, he can operate another key which instructs the system to restore that particular trunk to service. Whenever the system reacts to a make-busy or remove-busy order from the TLT panel, it also prints a message on the TTY identifying the trunk which was made busy or restored to service.

If the maintenance man wants to mark a trunk maintenance-busy but finds that it is traffic-busy, he can instruct the system to mark it maintenance-busy as soon as it becomes idle and to notify him by a message on the TTY. Thus, he can continue with other work until the trunk is available.

Test access trunks — Once a trunk or service circuit has been identified, the system can be instructed to connect it to any one of the three test access trunks. Thus, if the maintenance man identifies an outgoing trunk and causes the system to outpulse to a test terminal or test facility

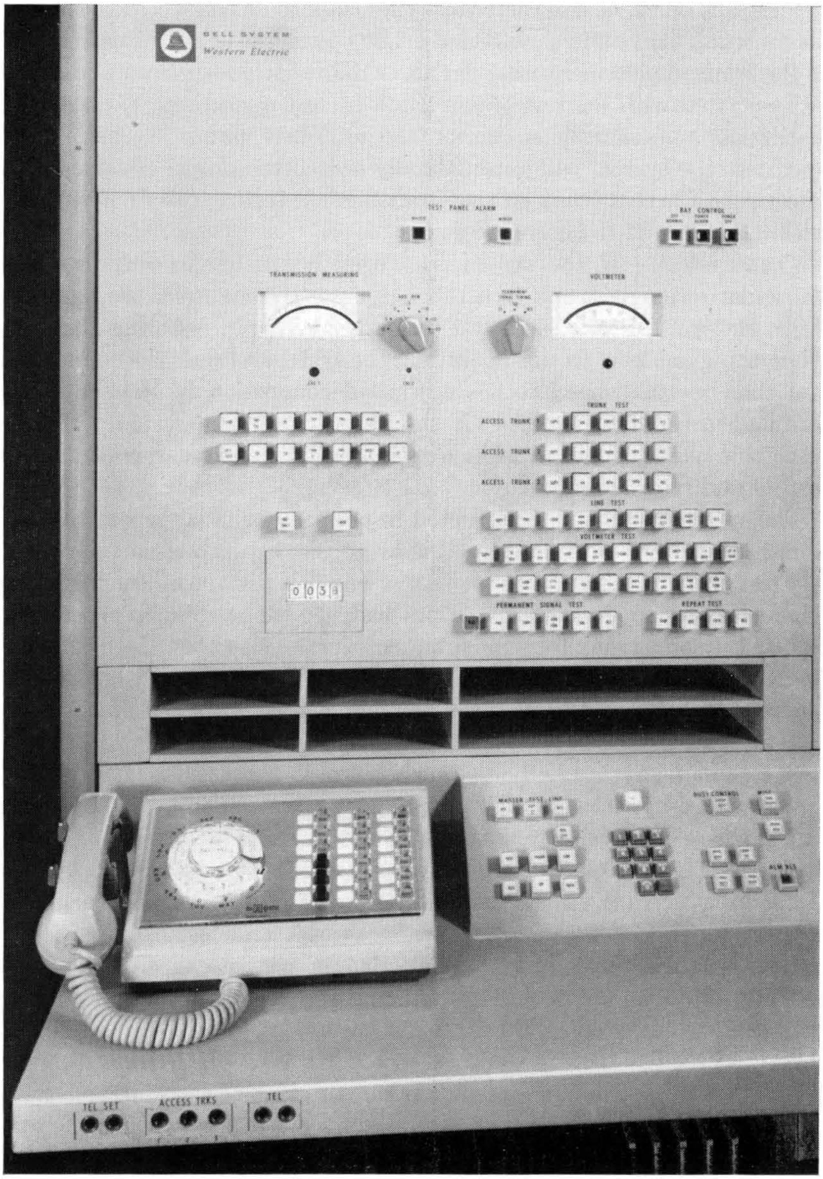

Fig. 9 — Equipment arrangement of TLT panel.

in a distant office, he can then cause the trunk to be connected to the test access trunk (key- and jack-ended). The voltmeter test facilities as well as the transmission measuring circuit or milliwatt power circuit can then be associated with the test access trunk by key operations. If either the transmission measuring circuit or the milliwatt power circuit key is operated, the system will automatically switch the proper resistive pads into the test access trunk so that transmission testing can be performed within 0.1 dbm of the correct reference level.

Trunk retest — If the system has been instructed to outpulse on a particular outgoing trunk to a test terminal, the maintenance man can retest the trunk to the same test terminal by simply restoring and then reoperating one key. In this operation, the system releases the connection and then reestablishes another outpulsed connection to the same test terminal in the distant office via the same trunk. The system will continue this retest operation as long as the maintenance man continues to restore and reoperate the key.

The system can also be instructed to perform a similar repeat test automatically. That is, if a test call is established to a permanently busy test terminal or an incoming trunk test line in a distant office, the maintenance man can, by key operation, instruct the system to repeat the test on the same trunk for a maximum of thirty-two times. Each time the system establishes a new test call, it will monitor the signals or tone being returned from the test terminal and report when a failure is detected.

Substitute trunk test — Loop pulsing trunk circuits in ESS are designed with a bypass state. That is, under system control, the trunk circuit can be completely bypassed or removed from the trunk. This feature makes it possible to switch a substitute test trunk circuit in place of a loop-type trunk circuit suspected of being faulty. The network connections for this operation are shown in Fig. 10. This feature can be used to help isolate troubles in a trunk. If the maintenance man cannot successfully establish a call through either the regular trunk circuit or the substitute trunk circuit, he has reasonable assurance that the trouble is not in the regular trunk circuit.

Line testing — The maintenance man can identify a customer line in the same way that he identifies a trunk or service circuit. Once the system has received the identity of a line from the TLT panel, it reports the busy-idle status of the line and displays the line's class of service (e.g., coin, noncoin, PBX). If the line is idle, the system will connect the line to the TLT panel via the line test trunk. The line test trunk is key ended at the TLT so that the voltmeter test circuit can be associated with the line. Keys are also provided for ringing the line, exercising coin

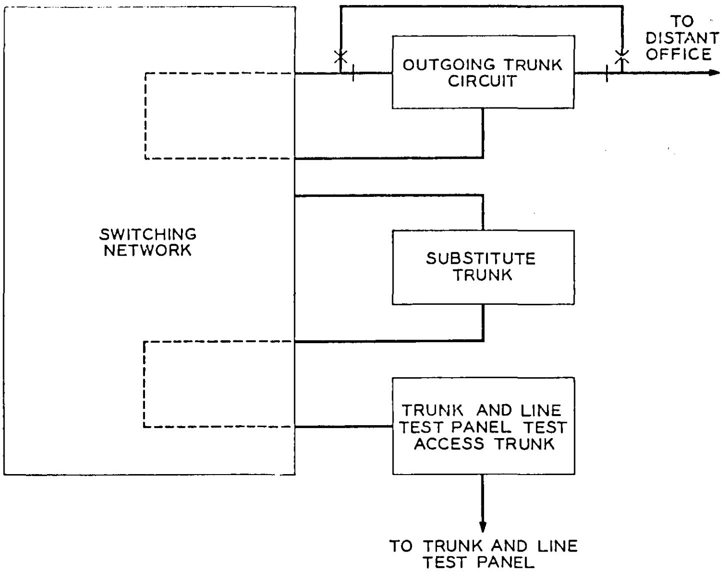

Fig. 10 — Network connections for substitute trunk.

control if it is a coin line, applying receiver off-hook (ROH) tone, and testing the ferrod associated with the line.

Monitoring — By key operation, the system can be instructed to establish a monitoring connection to any identified traffic-busy trunk, service circuit, or line.

Permanent signal holding trunk — When a permanent signal persists on an ESS line, the system sequentially connects the line to a recorded announcement, ROH tone, an operator trunk, and the permanent signal holding trunk appearing at the TLT panel. If the permanent signal condition ceases any time during this sequence, the line is restored to normal and the balance of the sequence is omitted. When the system connects a permanent signal line to the permanent signal holding trunk, it alerts the maintenance personnel by lighting a lamp associated with the holding trunk at the TLT panel. The system also indicates whether the line is serving a coin station, a PBX, etc. If the maintenance man takes no action on the permanent signal, the lamp will start flashing after a timed period and an audible alarm will be sounded.

The holding trunk is key ended at the TLT panel, and by key operation the maintenance man can challenge on the line, ring, or apply ROH tone. If these actions fail to clear the permanent signal, he may test the line with the voltmeter test circuit and instruct the system to disconnect the line from the holding trunk. When the system releases the network connection to the line, it causes the directory number of the line to be printed on the TTY and continues to scan the line. There is no network connection to the line during this scanning operation. However, when the trouble causing the permanent signal is cleared, the system will automatically restore the line to service and notify the maintenance man via the TTY that the line is now free of trouble.

Only one permanent signal holding trunk is provided, because the ESS has the ability to establish a queue of permanent signal lines which have been subjected to all parts of the permanent signal sequence except for being connected to the holding trunk. Consequently, if permanent signals exist on more than one line, the line that has been in the permanent signal queue the longest will be connected to the holding trunk as soon as the maintenance man releases the holding trunk. The system will notify maintenance personnel if the number of lines waiting in the permanent signal queue increases beyond a certain number, and on request will print via the TTY a complete list of all line directory numbers which are in a permanent signal state.

Test progress and errors — The system is arranged to inform the maintenance man of the progress on any test call that he has instructed the system to perform, and in addition alert him to many kinds of errors. For example, if an irregular code is keyed to the system or if any of the control keys are operated incorrectly, the system will flash a lamp at the TLT panel.

Register listing feature — All information transmitted to the system from the TOUCH-TONE key set via the master test line is stored by the system in a register until the MTL is released. The contents of this register include the identity of a trunk and the outpulsed number, etc. The maintenance man may at any time interrogate the system as to the contents of the MTL register by operating a key. The system will then cause the contents of the register to be printed on the TTY.

The preceding description illustrates the types of features that are included in the TLT panel. All of the features provided in the TLT panel, including those described here, provide the operating company personnel with a flexible and versatile tool for testing and maintaining lines, service circuits, and trunks.

IV. AUTOMATIC MESSAGE ACCOUNTING IN NO. 1 ESS

4.1 *Introduction*

The automatic message accounting (AMA) facility in No. 1 ESS collects and records all pertinent data related to the charging of customer calls. This information is later transported to an accounting center where it is used to determine the charges to be included on each customer's telephone bill. The entire operation can be divided into four parts:

(a) collection of the data on all calls for which charging information is required,

(b) assembly of data into coded format,

(c) data recording on a medium suitable for transportation to the accounting center, and

(d) data processing in the accounting center.

The first three of these function are performed by No. 1 ESS.

4.2 *General*

The major features of the No. 1 ESS AMA are:

(a) maximum use of the system data processing capability to minimize the amount of circuitry and hardware,

(b) data recording as a completely assembled entity for each call, and

(c) use of magnetic tape as the recording medium.

When the call processing program determines that an AMA record is required on a particular call, it stores the pertinent data in an AMA register located in call store (see Fig. 11). This information is then as-

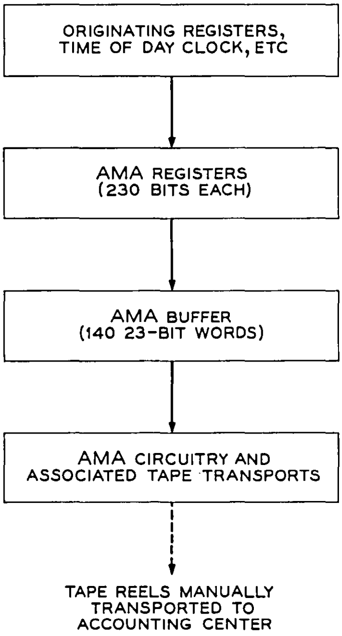

Fig. 11 — Simplified flow of AMA data.

sembled in binary-coded decimal format and stored in a temporary buffer storage area. When the buffer reaches its capacity, the recording procedure is initiated. An AMA program causes the data to be transferred one word at a time to the AMA circuit for recording on magnetic tape. Each tape is properly identified with labels for processing control.

Normally, each central office is provided with two AMA circuits and one block of buffer storage. One circuit serves as the active unit while the second serves as a standby. Each midnight, the system automatically switches the two units. Thus all AMA data during a 24-hour period are normally recorded on one magnetic tape. This complex of two AMA circuits and one block of buffer memory is capable of handling as many as 70,000 busy hour calls or about 100,000 calls on each reel of tape. In very large offices, four AMA circuits and two blocks of buffer memory will be provided. The two additional AMA circuits and the additional memory are required only when the traffic in a given office is greater than about 70,000 calls per busy hour or when the additional machines are desired so that tape changes will not have to be performed as frequently.

4.3 *Accumulation of Charge Information*

Before any chargeable call can be connected through the network, an AMA register must be associated with the call.[2,7] Once an AMA register has been associated with a call, all pertinent data available from the originating register are stored in the AMA register. The answer time and disconnect time are also stored when available as readings from the ESS time-of-day clock in hours, minutes, seconds, and tenths of seconds. When the call is completed, the information is organized into a binary-coded decimal format and stored in a buffer area.

Each AMA register has a 230-bit capacity (10 call store words), enough call store memory for almost any type of AMA entry. Facilities also exist for internal memory linkages with other registers to obtain extra storage area for types of calls requiring additional information. The extra memory is needed for calls such as those requiring operator assistance and the use of the traffic service position switchboard, or those calls requiring more than one billing entry for services such as dial conference and add-on.

Normally, only completed calls are recorded by No. 1 ESS. However, the call processing program is arranged to place a number of special marks in the originating register which also allow incomplete calls to be recorded. For example, if a calling line is arranged for service observing, an indication is placed in the originating register that this call may be service observed. If the call is being observed, an entry is made in the AMA register and the call is entered as a detailed entry regardless of whether or not it was completed. Complaint observing entries are also provided for message rate lines. In this case, a special mark indicates that charge information for all AMA calls originating from a particular message rate line is entered on tape as a detailed entry.

4.4 *Assembly of Information into AMA Entry*

The information in the AMA register must be coded in a standard binary-coded decimal (BCD) form for use in the Bell System data processing centers. Because of the large number of entry types in the ESS, AMA formats have been specified to allow for recording all types of calls in a minimum of call store space. The information in an AMA register is arranged in a format appropriate to the particular type of call after all disconnect timing has been completed.

At midnight, before the active unit is switched into the standby state, all completed AMA entries are placed on the tape so that the total AMA record for the day is on one tape. When an AMA register has been held through two consecutive midnights, a trouble alert report is printed by the maintenance teletypewriter and the call can be manually checked for validity.

4.5 *AMA Buffer and Control*

The AMA buffer provides intermediate storage for the AMA data in the call store. Buffering is required to collect sufficient AMA data to fill an AMA block of 100 words, each word consisting of five 4-bit characters. When the AMA buffer is filled, the transfer sequence is started for recording this block on magnetic tape. (See Section 4.10 for a detailed description of the recording process.) Each 100-word block contains from seven to 20 call entries, depending upon the type of calls being recorded. Overlap of an entry from one tape record block to the next is permitted.

The buffer actually consists of 140 call store words, but it unloads only 100 words at a time. The extra 40 words permit the full contents of an AMA register to be placed in the buffer even though only part of the call fits into the 100-word block. As the program empties the buffer, that space becomes available for loading with new data.

When handling normal AMA traffic, the AMA block contains approximately 11 call entries. Recording on magnetic tape is done at a rate of one 100-word block per second. This provides a recording capability of

25,000 to 72,000 complete AMA entries per hour. Large offices with predominantly message-rate traffic may be equipped with two AMA buffers and four AMA circuits. These would increase the total AMA entry capability to between 80,000 and 144,000 entries per hour.

4.6 *Tape Format, Labels, and Codes*

The AMA data is written on the tape in a format which usually includes the following:

(a) tape header label,
(b) call entries,
(c) tape trailer label, and
(d) tape mark.

The tape header label is recorded once every day at midnight to indicate the start of a day's call records. Its contents include the originating area code or building number, the ESS office identification number or office number, the date, and the tape transport number.

Each call entry consists of a start-of-entry code, a type-of-entry code, and the data field. The type-of-entry code indicates the precise type of call and, consequently, the quantity and nature of the data to follow in the data field.

The tape trailer label is also recorded once every day at midnight to indicate the end of a day's call records. It includes the total number of call entries and the total number of 100-word blocks of call data recorded on the tape since the last header label.

The tape mark is a special character which indicates to the accounting center the end of the useful information on the tape. This label is recorded at the request of the maintenance man just prior to his removing the tape from the transport, or is recorded automatically when the system detects the physical end of the tape.

A transfer label is provided for use in special situations. This label is recorded on both tapes whenever it is necessary for the system to switch from one AMA circuit to the other because of trouble. However, switching is postponed as long as the traffic load will permit to allow immediate repair to the faulty circuitry. In many cases, this will allow all of one day's call records to be recorded on a single tape even though trouble occurred.

All data for a particular call are recorded on tape within a single entry. This single-entry arrangement employs the modified American Standards Code for Information Interchange (ASCII), as indicated in Table I. The billing data for each call are recorded as 4-bit BCD numbers in

TABLE I — AMA TAPE CODING IN No. 1 ESS

Track and Code							
B7	B6	B5	B4	B3	B2	B1	
1	1	1	0	0	0	0	0
0	1	1	0	0	0	1	1
0	1	1	0	0	1	0	2
1	1	1	0	0	1	1	3
0	1	1	0	1	0	0	4
1	1	1	0	1	0	1	5
1	1	1	0	1	1	0	6
0	1	1	0	1	1	1	7
0	1	1	1	0	0	0	8
1	1	1	1	0	0	1	9
1	1	1	1	0	1	0	label identifier
0	1	1	1	0	1	1	noncheck dummy
1	1	1	1	1	0	0	start-of-entry code
0	1	1	1	1	0	1	check dummy
0	1	1	1	1	1	0	tape mark
1	1	1	1	1	1	1	write/read head check code
0	0	0	0	0	0	0	interblock gap
parity	fill		data				

groups of varying length. The previously mentioned labels (header, trailer, and transfer) always include the label identifier code, which is recorded once, twice, or three times to identify the type of label. The noncheck dummy code is used to fill out blank spaces in records where the blank is not the result of a trouble condition. This code is placed in an AMA entry before it leaves the AMA register. The check dummy code is also used to fill out blank places. However, the check dummy code is written by the AMA circuit in the event of trouble or in case a word is not received at the proper time from the AMA memory buffer.

4.7 *The Tape Recorder*

The digital tape recorders used in the AMA circuit have been specifically developed for No. 1 ESS use. Their design was based on three basic requirements:

(a) a recording capability of about 1000 7-bit characters per second on 0.5 inch magnetic tape,
(b) long-term reliability, and
(c) economy.

This relatively low data recording rate permits just one tape recorder to keep up with the busy-hour AMA traffic of the vast majority of central offices and allows the design of a simple and rugged recorder. Nevertheless, at least two AMA circuits are always provided, named AMA0 and AMA1, for reliability and continuity of recording. Each employs a tape recorder and the necessary control circuitry.

The tape recorder is a two-speed tape drive mechanism designed for start-stop operation. Tape speed for recording is 5.25 inches per second ±5 per cent. A fast forward speed of 30 ips is also provided for winding unused tape on the take-up reel. There is no rewind feature. Both start and stop times are less than 100 msec. There are no belts, pulleys or gears. Tape is driven by the directly-coupled capstan motor shaft. Tape wow and flutter are less than 2 per cent.

Recording is done with a seven-track write head in the non-return-to-zero (NRZ) mode with ±100 ma head current ±10 per cent. A seven-track read head is spaced 2.25 inches from the write head and yields an output voltage of ±1.3 mv ±25 per cent (Ampex 832 magnetic tape); see Fig. 12. Provided also are a write-read tachometer head for checking tape speed and a seven-track erase head for erasing all previously recorded data before the tape moves under the write head.

Regular or heavy-duty 0.5-inch tape is used. Reels are of the 10.5-inch precision type with 2400 feet of tape per reel in "A" wind (oxide in). Tape skew at 5 ips is less than 140 μsec. Recording density is 200 bits per inch. Four tracks are used for data recording; one records an odd parity bit, and two are for fill bits that record "1's" when the circuit is recording.

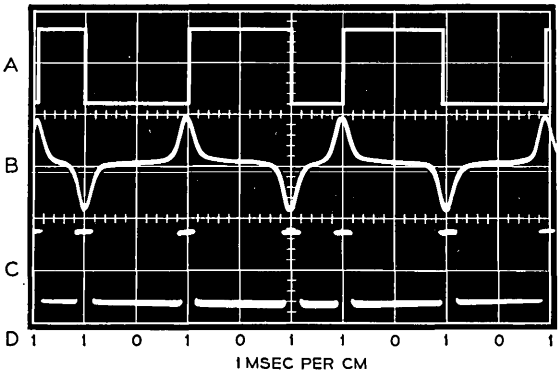

A - WRITE HEAD INPUT - 200 MA PEAK-TO-PEAK
B - READ HEAD OUTPUT - 2 MV PEAK-TO-PEAK
C - READ CIRCUIT OUTPUT - 5V PEAK-TO-PEAK
D - RECORDED MESSAGE

Fig. 12 — AMA circuit waveforms.

4.8 *Functional Block Diagram*

A simplified AMA circuit block diagram is shown in Fig. 13. Communication with central control (CC) is accomplished over different channels for control, timing, data and alarm signals. Control signals received from the central pulse distributors (CPD) control the AMA circuit state, interrogate it as to certain alarm conditions, and signal the arrival of data for recording. The AMA circuit timing is based on the 0.5-msec and 5-msec central control clocks transmitted to it over private duplicated wire pairs. Data for recording are received over 21 wire pairs of one or the other peripheral address bus (PADB). The peripheral answer bus (PANB) is used to send to central control either trouble reports, tape readouts or data point signals for diagnostic checks. Scanner drivers report AMA circuit conditions, including:

(a) AMA circuit state,
(b) lack of tape tension,
(c) end of tape,
(d) incorrect tape speed, and
(e) power alarm.

The sequence control circuit tests for the proper command signal sequence from central control, provides the internal timing of the AMA circuit, and governs the writing of characters on tape.

The input register and translator store the data word while its parity is being checked by the parity checking circuit, divide the words into five characters, and store them along with a parity bit for each character until gated for recording on tape.

The read amplifiers send each read character to the check register, where its parity is checked. If a character fails the parity test, it is stored in the check register for gating to CC over the PANB.

The tape motion check circuit measures tape speed by timing the interval for tachometer pulses to travel from under the tachometer write head to the tachometer read head, with the two heads spaced 0.050 inch apart. If tape speed is not correct, a scan point is activated in the master scanner.

The alarm timeout circuit stops the motors and the recording sequence should central control start the motors and not order them stopped within 1 second. This provides self protection from major internal faults and from continuous neglect by the system.

Each AMA circuit employs 153 circuit packs with 645 transistors and 1693 diodes, and dissipates about 200 watts of +24-v power and 30 watts of −48-v power. Each tape recorder draws 0.8 ampere of 3-phase 208-v power and requires about 1 ampere of −48-v power for control.

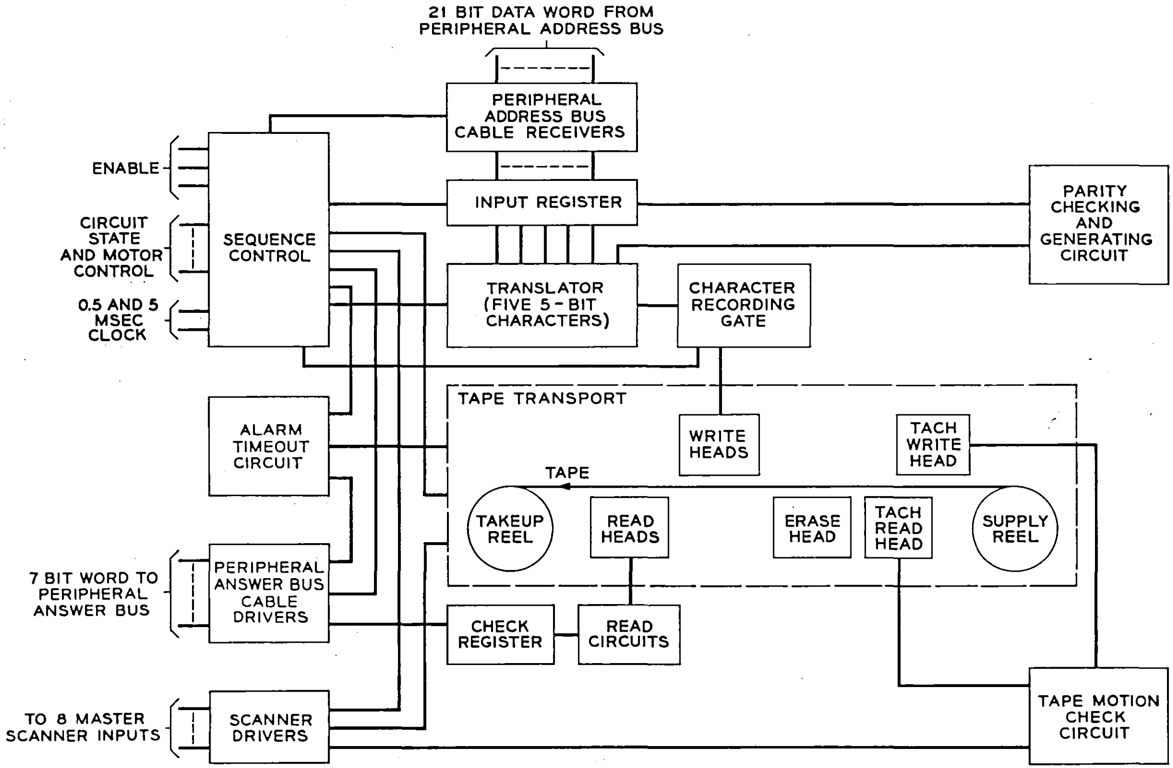

Fig. 13 — Simplified AMA circuit block diagram.

4.9 *AMA Circuit States*

By means of manual pushbutton control at the frame and system control via CPD signals, it is possible to order the AMA circuits into a number of states.

The three manual control states are:

normal — used for data recording and system diagnosis of troubles,

manual control — used when tapes are changed,

power off — used to remove all power from the circuit.

Mechanical interlocks on the control insure that at least one AMA system is in the normal state.

In the normal manual control state central control can place either AMA circuit into any one of five states:

active — ready for or actually recording data. Normally, during one 24-hour period only one AMA circuit is in active state and records all AMA data.

standby — ready for recording of data, but not expected normally to be put into the active state during this 24-hour period.

quarantine — as a result of system-diagnosed troubles the AMA circuit has been isolated from the system.

maintenance 1 — used to diagnose portions of the AMA circuitry for faults. Bypassing the write amplifiers, tape, and read amplifiers, incoming data are shunted to the check register.

maintenance 2 — used to report to central control various internal circuit conditions of the AMA sequence control.

Finally, if any fuse blows, all dc and ac power is removed from the circuit, a major alarm is initiated, and the circuit is in the power alarm state.

4.10 *Normal Operation*

By means of the proper CPD signals CC selects and places one of the two AMA circuits in the active state. It then sends a CPD signal which starts the tape transport motors and waits for all scan points to read zero, indicating no alarms and active state. This will occur in less than 150 msec, after the tape speed has stabilized to five inches per second. CC then sends the CPD a signal to begin the write sequence with the receipt of the next 5-msec clock pulse. The AMA sequence control circuit, in turn, times 1 msec, during which the enable signals and the data word for recording must be received. The first enable pulse (EN0) resets the input register. The next enable pulse (EN1) could be sent about 11 μsec later, but under normal conditions is omitted. The third enable pulse

(EN2) is sent another 11 μsec later, but still within the same millisecond interval, and informs the AMA circuit that during the next 2 μsec a data word will be sent, specifying the PADB bus. The data word consists of 20 data bits and 1 odd parity bit. After being gated to the input register it is checked for parity by the parity check and generating circuit. The 20 bits are arranged into five 4-bit characters in the input translator circuit, and the parity check and generating circuit calculates and stores an odd parity bit for each of the characters. At this stage there are five 5-bit characters ready to be recorded. The first character and two fill bits are recorded 1.0024 msec after the start of the write sequence, and others follow at 1-msec intervals. The fifth character is thus recorded 0.0024 msec after the "second" 5-msec clock pulse. Then the EN0 enable pulse is received again, resetting the input register. This EN0 also is used to gate to CC the parity of the 21-bit word just recorded (good or bad) and the fact that the check dummy character was not (or was) recorded. The check dummy character is defined in Section 4.6, and its use is explained in the next section. After this, another EN2 enable pulse is received and the cycle repeats. This 5-msec cycle is repeated for 100 21-bit words, yielding a 500-character AMA block.

At the end of the 500 characters, CPD signals the end of the write sequence. Another CPD signal orders the tape motors stopped. Within 100 msec the tape will slow to 5 per cent of normal speed. It should be noted that the AMA block is longer than 500 characters by the number of the check dummy characters recorded. Typically, the entire process of starting the tape transports, recording 500 characters and stopping takes less than one second. During this time about 3.5 inches of tape is used.

In addition to writing circuitry, the AMA contains tape reading circuitry, used only as a running check on the writing process. The write and read heads are separated by 2.25 inches. This means that the AMA circuits cannot write a character and simultaneously read it to see if the proper bits were recorded. Under normal conditions the read and check circuitry reads the characters off the tape, checks their parity and notes that they are not dummy characters, temporarily stores them in the check register, and then discards them.

4.11 *Operation under Trouble Conditions*

The AMA circuits have a number of features for detecting, diagnosing and reporting to the system any troubles encountered. In some instances the AMA circuit removes power from itself and places itself in an alarm state, activating the proper scanner drivers. In other cases, the AMA circuit merely reports faults to the system, such as wrong tape speed or parity failure on read, and relies on the system to put it into maintenance states for trouble diagnosis or to switch to the use of the standby AMA circuit. In both cases, trouble detection and switching to the alternate unit take place in less than one second, corresponding to the maximum loss of one block of AMA data. It is expected that most of the troubles will be detected in very much less time and, in fact, before any particular block of AMA data is to be recorded.

In case of tape breakage the AMA circuit automatically removes power from the transport motors, stops the write sequence, and places the circuit into the power alarm state. The same action is taken if the unit runs out of tape. Normally, the end of the tape is detected by photocells through a clear section of the tape at the end of the reel and the proper scan point is activated for the system to turn off power.

If the parity check and generating circuit finds that the 21-bit word received has even parity, the sequence control orders the AMA circuit to record five check dummy characters (0111101). The parity failure is reported to the system on the next EN0 pulse over the PANB. The system may elect to send that 21-bit word again on the next EN2 pulse for another recording.

The AMA recording activity is synchronized with the system 5-msec clock. If the circuit does not receive the 21-bit input word within the first millisecond after the recording cycle starts, it proceeds to record the five check dummy characters. This again is reported to the system as a 21-bit parity failure.

It was mentioned earlier that the read and check register circuitry is used to keep a running check on the write circuitry. If the check circuit finds an error, indicated by even parity of the 7-bit character or by detection of the dummy character, or if no characters at all are read from the tape, it locks that character in the check register and reports this fact to the system on the next EN0 pulse via the PANB. The system may then elect to gate the stored character out on EN1 over the PANB for inspection. The following EN2 pulse will clear the check register whether or not the character was gated to the system, and the check circuit will begin again checking characters read from the tape. The system determines whether the error rate as reported by the check circuit is great enough to put the particular AMA circuit into maintenance states for trouble diagnosis or to switch to the use of the other AMA circuit.

4.12 *Operation in Maintenance States*

For the purposes of trouble diagnosis in an AMA circuit, two maintenance states are provided. The tape transport motors do not run in either maintenance state. In maintenance state 1 the translator outputs are fed directly to the check register. Thus the write amplifiers, tape, and read amplifiers are bypassed. The sequence control produces the clock pulses which gate the 7-bit characters from the translator at a 10-msec rate instead of the normal 1-msec rate. Data are received over the PADB at the rate of one 21-bit word every 50 msec instead of the normal 5 msec. Every character is gated back to CC. In maintenance state 2 the EN1 signal is used to gate to CC various internal conditions of the sequence control.

V. SUMMARY

The No. 1 ESS master control center provides:

1. a convenient means for both local and remote control of the system via teletypewriters,
2. a simplified arrangement for displaying and controlling the system operational status as well as for reporting system troubles to the maintenance personnel,
3. a facility to be used for manually testing lines, trunks, and service circuits, and
4. compact and inexpensive storage of subscriber charging information in a form readily usable in an electronic data processing system.

VI. ACKNOWLEDGMENTS

The authors wish to acknowledge their indebtedness to the many members of the electronic switching systems laboratory and center who have participated in the planning and design of the No. 1 ESS master control center. In particular, we would like to mention R. E. Hart, D. F. Illari and B. J. McMahon for the formulation of many of the system requirements; K. K. Kennedy, C. E. Krause and G. F. Swetnam for their contribution to the design of the AMA circuitry; J. E. Smathers and D. E. Smith for their contribution to the design of the TTY transmit-receive circuit; G. E. Jacoby for his contribution to the design of the line and trunk test circuit; and M. R. Gotthardt for his contribution to the design of the alarm, control and display circuit.

REFERENCES

1. Harr, J. A., Taylor, F. F., and Ulrich, W., Organization of No. 1 ESS Central Processor, B.S.T.J., this issue, p. 1845.
2. Harr, J. A., Hoover, Mrs. E. S., and Smith, R. B., Organization of the No. 1 ESS Stored Program, B.S.T.J., this issue, p. 1923.

3. Downing, R. W., Nowak, J. S., and Tuomenoksa, L. S., No. 1 ESS Maintenance Plan, B.S.T.J., this issue, p. 1961.
4. Connell, J. B., Hussey, L. W., and Ketchledge, R. W., No. 1 ESS Bus System, B.S.T.J., this issue, p. 2021.
5. Freimanis, L., Guercio, A. M., and May, H. F., No. 1 ESS Scanner, Signal Distributor, and Central Pulse Distributor, B.S.T.J., this issue, p. 2255.
6. Biddulph, R., Budlong, A. H., Casterline, R. C., Funk, D. L., and Goeller, L. F., Line, Trunk, Junctor, and Service Circuits for No. 1 ESS, B.T.S.J., this issue, p. 2321.
7. Carbaugh, D. H., Drew, G. G., Ghiron, H., and Hoover, Mrs. E. S., No. 1 ESS Call Processing, B.S.T.J., this issue, p. 2483.

Line, Trunk, Junctor, and Service Circuits for No. 1 ESS

By R. BIDDULPH, A. H. BUDLONG, R. C. CASTERLINE,
D. L. FUNK and L. F. GOELLER, Jr.

(Manuscript received January 10, 1964)

In the No. 1 electronic switching system, individual circuits are needed on a per-line, per-trunk, and per-call basis to provide an interface between the outside world and the centralized call processing equipment. These circuits, including digit transmitters and receivers, are characterized by simplicity and compactness, and are program controlled. This article discusses their electrical and mechanical design along with transmission properties and maintenance procedures.

I. INTRODUCTION

Centralization of memory and control, long a dominant trend in telephone switching, has come close to the ultimate in the No. 1 electronic switching system (ESS). Nevertheless, individual circuits are still required on a per-call and even per-line basis to match the widely variable outside world to the standardized "inside world" of the central processor.[1] These individual circuits, the line, junctor, trunk and service circuits, provide the subject matter for this paper.

It is obvious that the central processor must work at very high speeds if it is to take over all memory and control functions. Even though actual signals from customers and other telephone offices come in relatively slowly, the central processor must operate rapidly to divide its time among the many signals flowing simultaneously over thousands of lines and trunks. What may not be so obvious, however, is the way in which this centralization affects the circuits in contact with lines and trunks during the processing of calls. In No. 1 ESS, these circuits have been reduced to very simple configurations; each circuit performs only a few functions under program control,[2] and different circuits are connected as needed via the switching network.[3] Both flexibility and economy result.

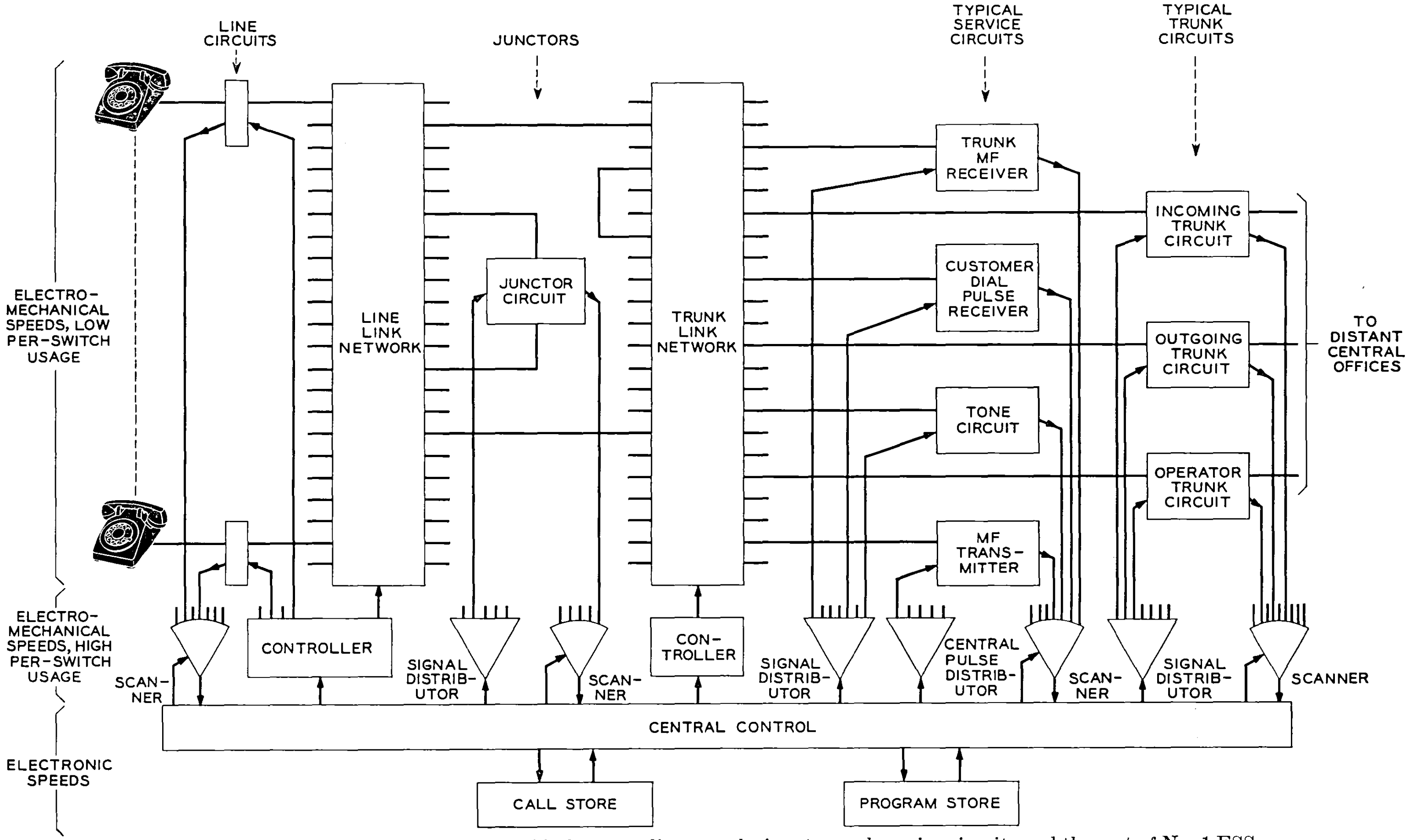

Fig. 1 — Block diagram showing relationship between line, trunk, junctor and service circuits and the rest of No. 1 ESS.

II. CIRCUITS DIRECTLY ASSOCIATED WITH CUSTOMER LINES AND TRUNKS

Fig. 1 shows the relationships between the various circuits associated directly with customer lines and trunks and the rest of No. 1 ESS. The status of customer lines and trunks is detected in the scanners by current-sensitive devices called "ferrod sensors" and transmitted to the central processor. The latter, consulting its memory and stored program, operates appropriate switching devices via signal distributors or central pulse distributors, depending on whether slow or fast action is required.[4] Interconnections are made via the networks, and the network controllers (rather than signal distributors) are used to operate switches in the line circuits.

It is important to note that ferrod sensors, although they behave in many ways like supervisory relays, perform no function other than current detection; they have no contacts and produce no circuit actions except indirectly via the central processor.

The scanners, signal distributors, central pulse distributors and network controllers act as input and output devices for the central processor. They require, however, additional circuitry to meet the variable conditions found on customer lines and trunks. Thus line, junctor, trunk and service circuits have been developed.

The line circuits shown in Fig. 2 are the simplest of these; they carry out the traditional functions of line and cutoff relays, supervising each customer line for originations and removing the sensing element to prevent its shunting the talking path. Carbon protector blocks, also shown as part of the line circuits, limit lightning surge voltages. In a way, there is no such entity as a line circuit in ESS, since the ferrod sensor is part of the line scanner, the cutoff relay is part of the network, and the carbon blocks are part of the protector frame. Nevertheless, it is convenient to refer to line circuits for purposes of exposition.

Next in complexity comes the junctor circuit, shown in Fig. 3. This circuit is used only during conversations between customers served by the same No. 1 ESS. Calling and called customers are connected to a junctor circuit via paths through line link network only (the trunk link network is not required, as can be seen from Fig. 1). Each junctor circuit contains two relays, labeled A and B. These are magnetic latching relays, pulsed operated or released by the signal distributor on command from the central processor.

Trunk circuits contain only a few more components than junctor circuits, but because more is required of them, their design is considerably more complex. They will be discussed in detail in the several sections

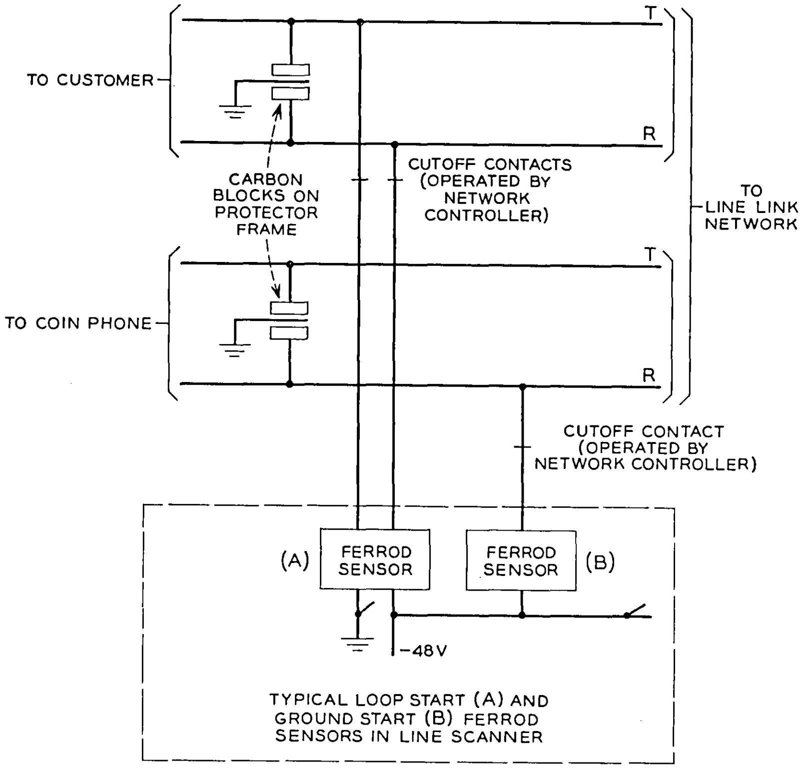

Fig. 2 — Typical loop start and ground start line circuits for sensing call originations and subsequently removing the sensor shunt.

which follow. At this point, however, it is necessary to emphasize the difference between a trunk and a trunk circuit. A "trunk" is a communication channel between two switching systems. It starts at the outgoing terminals of the switching network in the originating office and ends at the incoming terminals of the switching network of the terminating office.* As shown in Fig. 4, a trunk includes the transmission facility terminated in two "trunk circuits," one at each end. Traditionally, trunk circuits convert supervisory information (telephone on or off hook) from the distant central office into a form suitable for local use, and, conversely, convert local supervision to a form which can be transmitted in the opposite direction. Often, in present systems, current for the

---

* For transmission purposes, a trunk is measured between the outgoing network terminals of the originating office and the outgoing network terminals of the terminating office.

transmitter in local subsets is supplied from trunk circuits, digit pulsing features are included, and a variety of other functions are performed.

In No. 1 ESS, trunk circuits retain very few of these functions. Indeed, as can be seen in Table I, coin control, ringing, tone application and the like are *not* provided in trunk circuits but come from "service circuits" to which lines and trunks can be connected as required via the line and trunk link networks. This use of the networks is possible only because of the speed with which the networks and the central processor can work together to find, remember and set up paths.

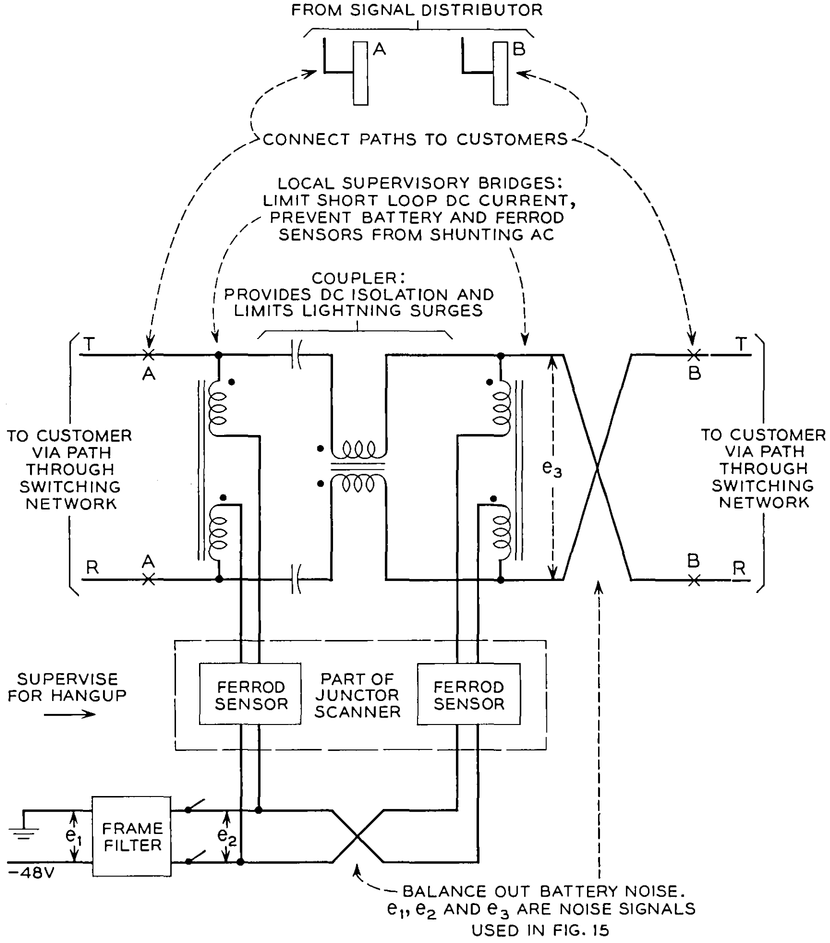

Fig. 3 — Junctor circuit used during conversations between customers served by the same ESS.

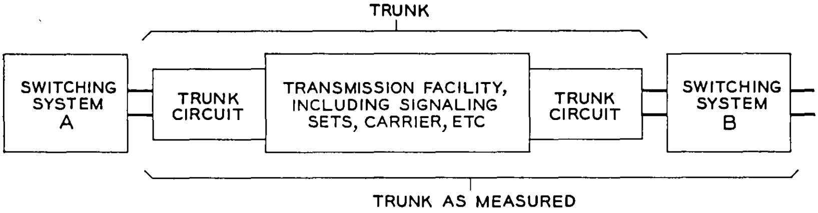

Fig. 4 — Relationship of trunk circuits to a trunk.

The advantages of this approach are many: no distinction between coin and noncoin trunks need be made, since coin control is not a function of the trunk circuit. Different types of ringing can be applied to different lines on a class basis. This permits sensitive trip relays with greater range to be used wherever possible, while less sensitive trip relays are retained for the remaining lines. New types of ringing can be added as desired, since, unlike earlier systems, no changes need be made on a per-trunk basis. Digit transmitters and receivers for signaling distant offices can be arranged in single groups by pulsing type, giving the usual

Table I—General Trunk Circuit Functions and No. 1 ESS Circuits which Perform These Functions

Function	Performed in No. 1 ESS by
Supervision	Scanners
Battery feed, dc isolation Transmission to local lines Transmission, trunk-to-trunk Path continuity check through line and trunk link networks Lightning surge protection for line and trunk link networks Make and break current through line and trunk link networks	Talking circuits, including trunk, junctor, and conference circuits
Signaling Ringing Returning tones Coin control Foreign potential detection Certain other tests	Service circuits including digit transmitters and receivers and ringing, tone, coin control, and test circuits
Timing Sequencing Memory (including digit storage) Charging	System control, including central control, call processor, call store, and program store

Table II—Line, Trunk and Service Circuits Used in Processing Telephone Calls in No. 1 ESS

Function	Intraoffice Call	Outgoing Call	Incoming Call
Detect origination	scanner via line ckt.	scanner via line ckt.	scanner via incoming trunk ckt.
Foreign potential test, party test, return dial tone	customer dial pulse receiver	customer dial pulse receiver	—
Obtain digits of called party	customer dial pulse receiver	customer dial pulse receiver	dial pulse, revertive, or multifrequency receiver as required
Outpulse digits of called party	—	dial pulse, revertive, panel call indicator or multifrequency transmitter as required	—
Return busy, overflow, or audible ringing tone to calling customer	tone circuit	circuits in distant office	tone circuit
Send ringing signal to called customer, detect answer and trip ringing	ringing circuit	circuits in distant office	ringing circuit
Provide talking current, transmission circuit	junctor circuit	outgoing trunk circuit	incoming trunk circuit
Supervise for hang-up	scanner via junctor circuit	scanner via outgoing trunk ckt.	scanner via incoming trunk ckt.

advantages of one large group over several smaller groups. Further, the type of pulsing on any trunk can be altered by a simple program change, because any transmitter or receiver can be used with any trunk, depending only on a translation option.

Table II shows how various line, junctor, trunk and service circuits are used to process typical telephone calls in No. 1 ESS. Several circuits and several network connections may be in simultaneous use on a single call.[3]

III. THE DESIGN OF TRUNK AND SERVICE CIRCUITS

3.1 *Switching Design*

Each trunk and service circuit in No. 1 ESS carries out some of the functions listed in Table I. However, within any one circuit, association of one function with a particular switching device is uneconomical. Instead, a given function is related to one particular state of a group of switches. The Karnaugh map[5] is a design tool well suited for such situations; it also aids in circuit explanation.

An example of the technique is afforded by a somewhat simplified version of the customer dial pulse receiver (CDPR) circuit as shown in Fig. 5. The CDPR is a service circuit used to correct distortion on pulses generated by customer dials and to repeat the improved dial pulses to the scanner. It performs the additional functions of testing for foreign potentials crossed to outside plant conductors, party identification on two-party lines, return and removal of dial tone, check of continuity through the switching network, and cut-through or the making and breaking of current flowing in each connection.

Matching circuit functions to circuit states must be done in such a way that (a) a minimum number of states is required and (b) the transitions from state to state are made as simply as possible. The solution for the CDPR is shown in Fig. 5 along with the circuit. Three magnetic latching relays, A, B and C, are operated by the signal distributor to provide eight states.

For minimum delay as well as minimum relay wear, the operation or release of just one relay takes the circuit from one useful state to the next. Two arrows, one solid and one dotted, show the two principal state sequences. For individual lines, the A relay is operated to put the circuit in the power cross test state. If no crosses to a foreign potential are detected, the B relay is operated to connect dial tone and the pulse-correcting circuitry. A is released to remove dial tone while leaving the pulse-correcting circuitry connected, and B is released to make the circuit idle when all digits have been received from the customer. Only four signal distributor operations suffice.

It must be remembered, however, that the scanner extracts information from the circuit at a high enough sampling rate to detect all dial pulses and that the central processor counts and stores digits, times for interdigital periods, translates route information, etc. The simplicity of the CDPR is possible only because of the versatility of the central processor.

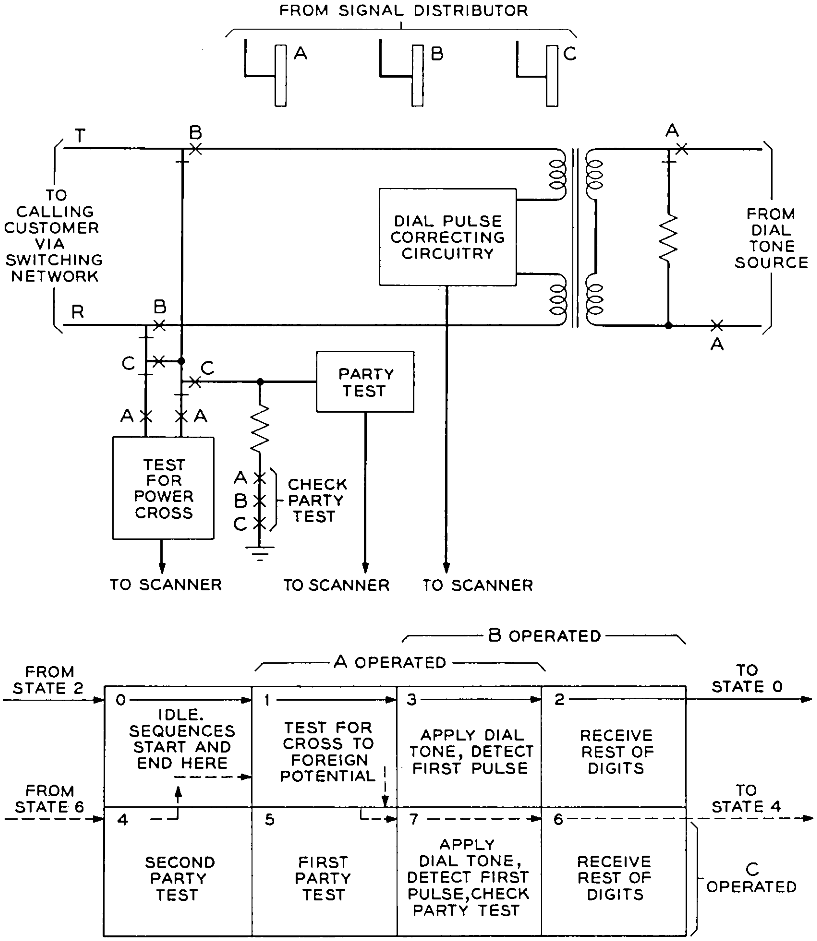

SEQUENCE	STATE NUMBERS
FOR INDIVIDUAL LINE	$\underrightarrow{0-1-3-2-0}$
FOR TWO-PARTY LINES	$\underrightarrow{0-1-5-7-6-4-0}$

Fig. 5 — Simplified circuit and Karnaugh map for customer dial pulse receiver, illustrating association of functions with states rather than individual relays.

The sequence for two-party lines (dotted arrow) starts with the power cross test state as before, then, on operation of the C relay, enters the first of two party-test states. Dial tone is returned after the party test is completed, and while dial tone is being transmitted the party-test circuit is checked for proper operation. Dial tone is removed after the customer starts dialing. Then, after all digits are received, the second party test is performed. Finally, the circuit is returned to its idle state. Only six signal distributor operations are required.

As a convenient method of keeping track of circuit states, each relay operated by the signal distributor is given a "weighting" number: A = 1, B = 2, and C = 4.* In any given state the weighting numbers of each operated relay are added together to produce the state number. Thus the two sequences in the customer dial pulse receiver described above would be 0-1-3-2-0 and 0-1-5-7-6-4-0 respectively. It must be emphasized that only one relay can be operated or released by a signal distributor at any one time. Thus sequences such as 0-3 are impossible. This constraint can be seen easily if one "walks through the map" as in Fig. 5 from one adjacent square to another, keeping in mind that opposite edges of the map are considered adjacent (as in the transition 2-0, where the B relay is released).

Figs. 6, 7 and 8 show three additional service circuits with their associated maps and typical sequences. Ringing, coin control potentials, and tones can thus be applied to any customer line in the office independent of the circuits used for conversation.

3.2 *Transmission Design*

Fig. 3 shows the transmission configuration used for intraoffice calls and also indicates the functions of some of the components. When a call is destined for a distant office, the somewhat more complex transmission circuit of Fig. 9 is employed. This latter circuit uses different coil resistances to control trunk supervisory currents, provides improved longitudinal balance, and also permits an impedance transformation when necessary. A nonconventional feature is use of an inductor-resistor network which substantially reduces the variation of impedance of customer lines with frequency as seen by the interoffice transmission facility. Although this network should be considered part of the customer loop to which the trunk is attached in any given conversation, the improved return loss it provides is useful only in transmission paths containing gain. Thus it is placed in trunk circuits for economic reasons.

---

* When more than three relays are required, octal notation is used: D = 10, E = 20, F = 40, G = 100, H = 200, etc.

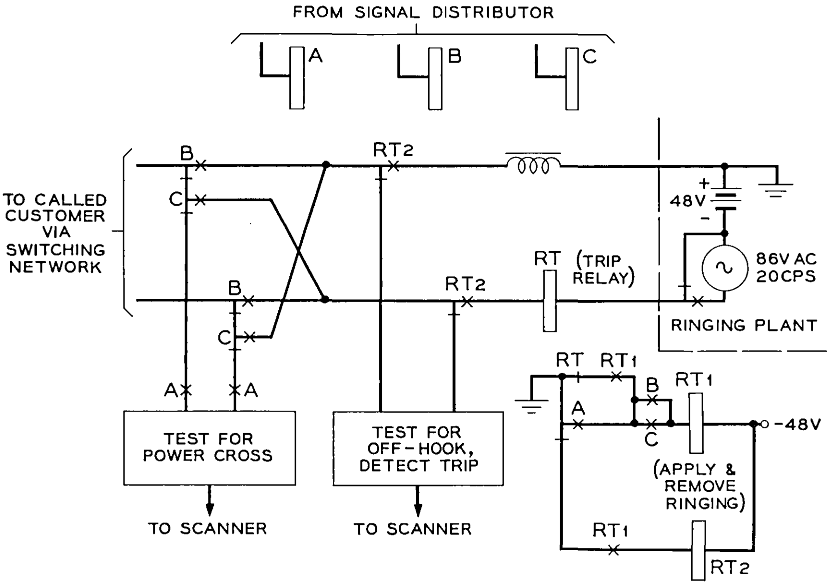

B OPERATED

A OPERATED

0 IDLE	1 TEST FOR CROSS TO FOREIGN POTENTIAL	3 TEST FOR OFF-HOOK	2 RING INDIVIDUAL AND RING-PARTY CUSTOMERS	
4 RING TIP-PARTY CUSTOMERS	5 TEST FOR EXCESSIVE TIP SIDE LEAKAGE	7 NOT USED	6 NOT USED	C OPERATED

SEQUENCE	STATE NUMBERS
FOR INDIVIDUAL AND RING-PARTY CUSTOMERS	0-1-3-2-0
FOR TIP-PARTY CUSTOMERS	0-1-5-4-0

Fig. 6 — Simplified circuit for applying ringing to certain classes of lines.

Fig. 10 shows the effects of this simple network on mean loop impedance, and Fig. 11 illustrates the increased mean return loss resulting from its use. Fig. 12, based on a comprehensive survey, shows how this improved echo and singing return loss is distributed over present Bell System loops.[6] This increase in customer loop return loss can be utilized in various ways; in particular, some increase in gain can be permitted on

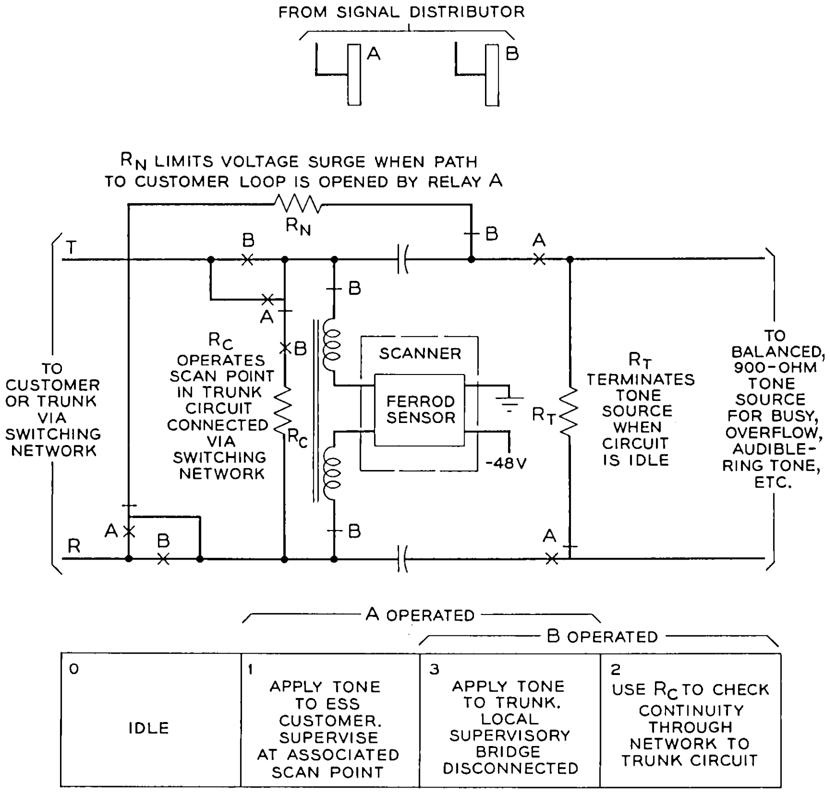

SEQUENCE	STATE NUMBERS
FOR LOCAL CUSTOMERS	0-1-0
FOR TRUNKS	0-2-3-2-0

Fig. 7 — Tone circuit.

toll connecting trunks. Although not shown on Fig. 9, idle circuit terminations are provided to assure repeater stability.

In a tandem connection, an incoming trunk must be joined to an outgoing trunk. Under such circumstances, customer loop compensation is omitted. Further, the local supervisory bridges in both the incoming and outgoing trunk circuits are switched out (as discussed in Section 3.3) to produce the equivalent of exactly one transmission circuit. The insertion loss of this tandem circuit varies less than 0.4 db between 200

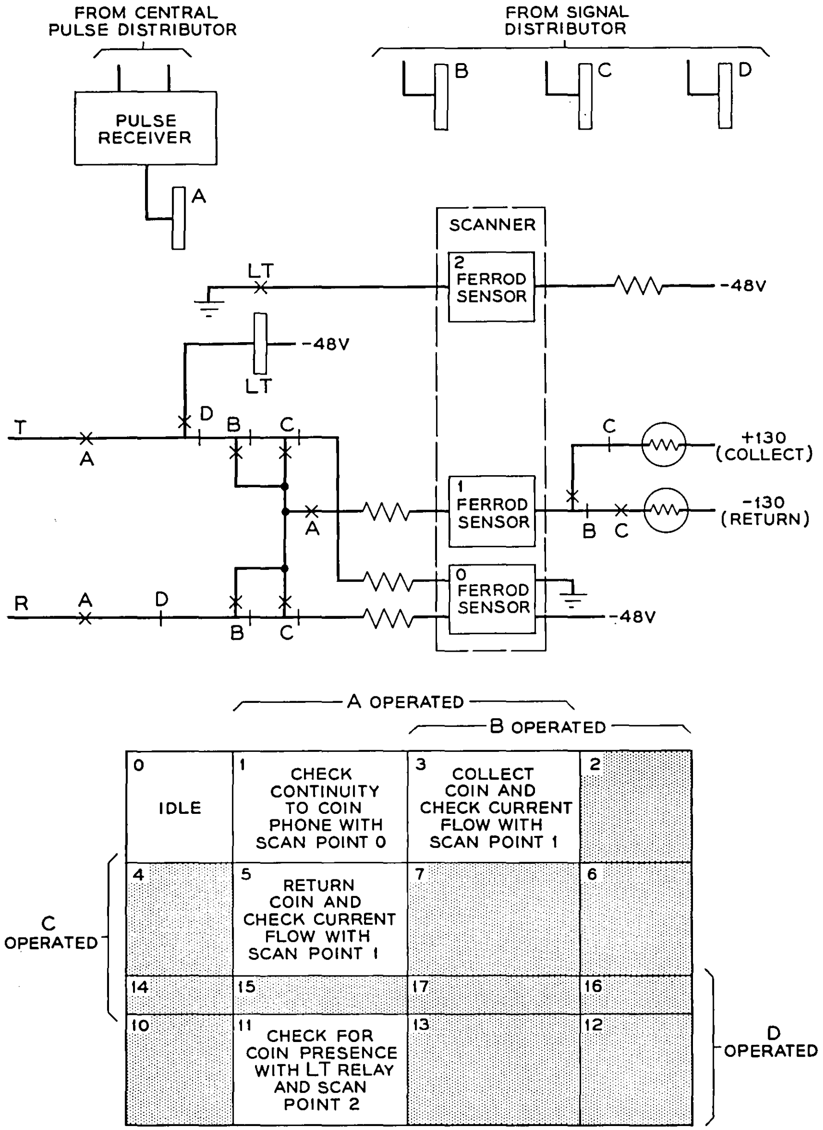

SEQUENCE	STATE NUMBERS
COIN COLLECT	0-1-3-1-0
COIN RETURN	0-1-5-1-0
COIN TEST	0-1-11-1-0

Fig. 8 — Simplified coin control circuit; because of very short holding time, central pulse distributor is used to speed up operation.

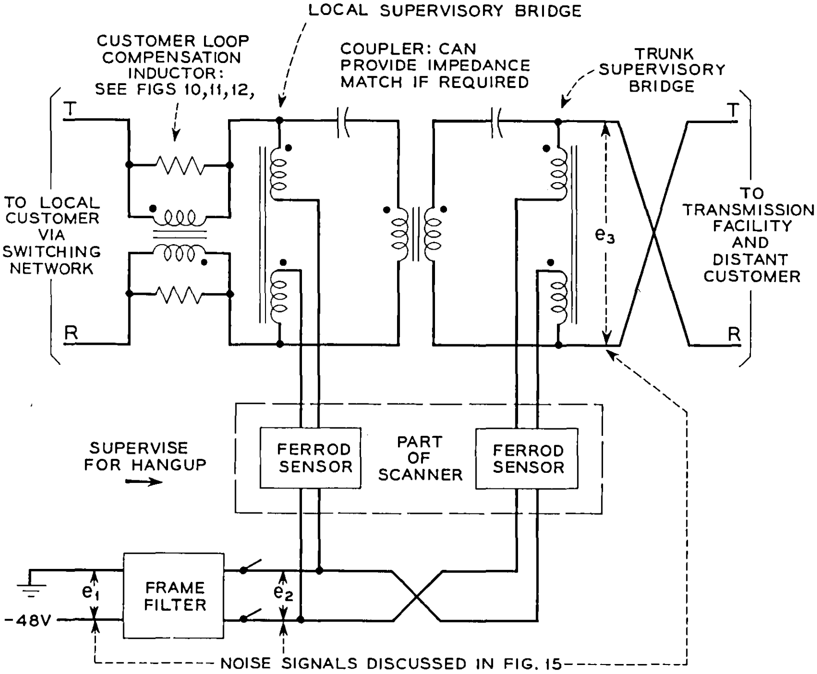

Fig. 9 — Transmission elements of trunk circuits: as shown, configuration corresponds to an incoming trunk circuit.

and 5000 cps, with a 1000-cps flat loss of 0.3 db. The structural echo return loss (not including switching network conductors)* is 36 db measured between 900 ohm + 2.14 mf terminations.

Fig. 13 illustrates the longitudinal balance characteristics of trunk and junctor circuits. Balance of each conductor relative to ground is necessary to reduce longitudinally induced noise from power lines and earth potentials, and to reduce battery noise and crosstalk coupled by common ground impedances. Individual components are designed to provide a longitudinal balance for the entire trunk circuit of at least 55 db when measured as shown. The measuring circuit simulates representative field situations. Both inductive and resistive components of the supervisory bridge inductors relative to their midpoints must be carefully controlled, and a balanced configuration is required in both transformer and blocking capacitors.

---

* Structural return loss of a trunk circuit is defined as the return loss of a trunk circuit terminated in a reference network measured against an identical reference network.

Because of the compact equipment arrangements in trunk and junctor circuits (to be discussed in Section V), great care is exercised to reduce crosstalk coupling. Special efforts have been made to reduce impulse noise in one circuit produced by relay operations in the second circuit on the same equipment unit. Audio-frequency crosstalk has also received attention; Fig. 14 shows the attenuation of voice-frequency crosstalk between a pair of such circuits.

Battery noise and common battery impedance present another disturbance to transmission. Fig. 15 shows how the frame battery filter reduces such noise; also shown is the effect of the well-known transposition which causes any remaining noise introduced into the line side to cancel that introduced into the trunk side.

In addition to the transmission properties of trunk and junctor cir-

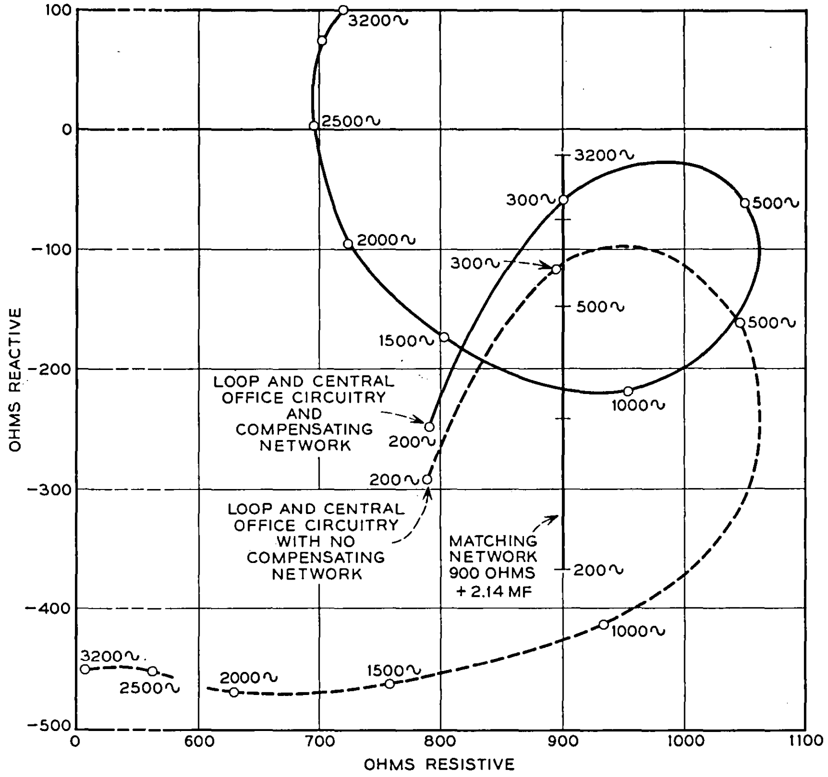

Fig. 10 — Effect of compensating network on mean input impedance of Bell System customer loops.

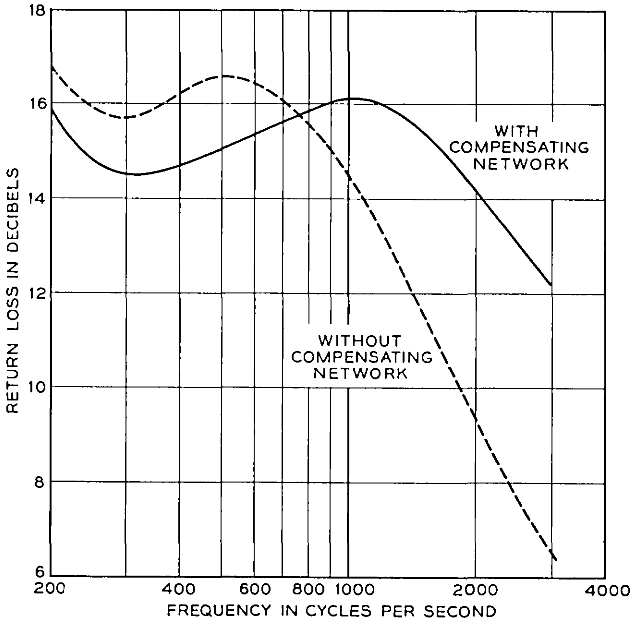

Fig. 11 — Effect of compensating network on mean customer loop return loss matched against 900 ohms + 2.14 mfd.

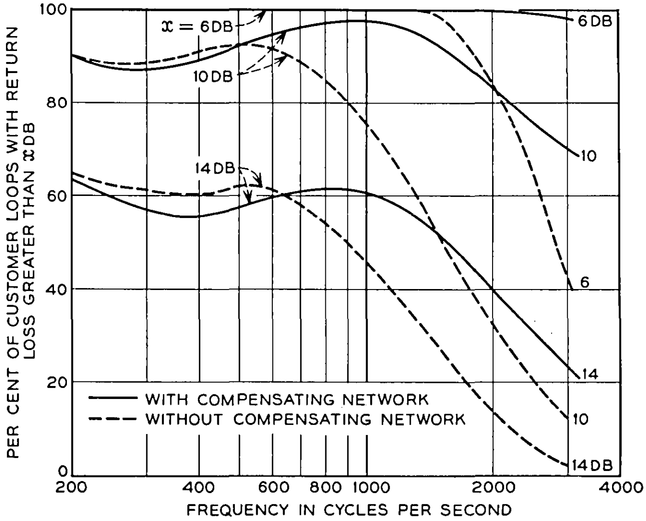

Fig. 12 — Effect of compensating network on return loss distribution of customer loops.

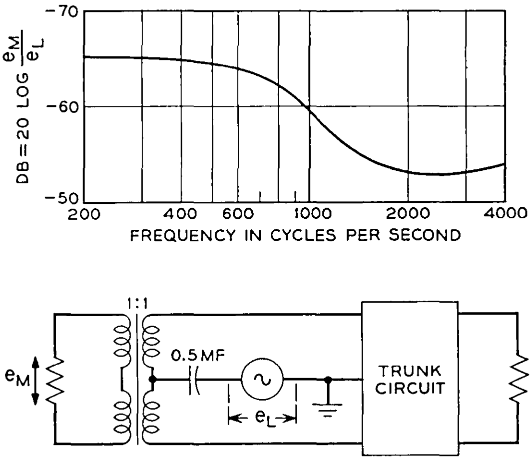

Fig. 13 — Longitudinal balance of trunk transmission circuit. Balance in db = 20 log [$e_{\text{metallic}}/e_{\text{longitudinal}}$] when measured as shown.

cuits, a number of other transmission features of importance are included in No. 1 ESS. The tone generators which supply signals to the tone circuit in Fig. 7 are balanced to ground and present a very high return loss when measured against 900 ohms + 2.14 mf. The level of these tones is closely controlled. Similar balance and return loss properties will be found in other service circuits, including the customer dial pulse receiver and interoffice transmitters and receivers.

A transistorized conference circuit is available to permit up to four persons to hold a joint conversation. Each input to this circuit has a separate appearance on the switching network so that full access to all lines and trunks is available. Modified versions of the conference circuit are used with certain operator-controlled calls and coin-zone dialing applications to permit the operator to split and hold the parties and talk to either or both without impairing transmission.

3.3 *Switching and Transmission in Trunk Circuits*

When the switching principles described in connection with the service circuits are combined with the basic transmission package, a small but versatile group of trunk circuits results. Three are chosen for discussion in Figs. 16, 17 and 18. Just as service circuits are made up of basic building blocks such as pulse correction circuits, detectors, etc, which are connected singly and in groups as needed, so the transmission package

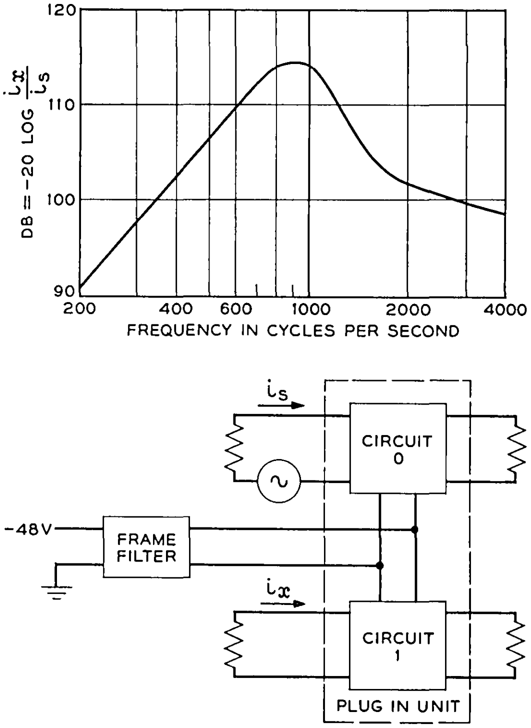

Fig. 14 — Attenuation of crosstalk signal i_x in ckt. 1 over input signal i_s in ckt. 0 when coupling is via common frame filter and power wiring as well as adjacency of components on mounting unit.

can be thought of as supervisory bridges, coupler, loop compensation network, idle circuit termination, and the like. In addition to arranging these components in various ways for local and tandem calls, relays in trunk circuits can bypass them all and connect a pair of conductors with no series or shunt components to the switching network. This permits direct connection to digit transmitters and receivers as required; dial or revertive pulses as well as multifrequency and panel call indicator signals can bypass the transmission elements in the trunk circuits.

Bypass and tandem requirements dominate in establishing the switching design of most trunk circuits. The general idea is to have only two supervisory bridges (one for each trunk) and one coupler in any tandem connection. To achieve this, three rules are applied:

(1) Operator trunk circuits always retain the coupler. In all trunk

circuits the coupler contains a transformer, which is usually a 1:1 device in the 900-ohm ESS office. However, switchboards usually use 600-ohm circuits and, if a switchboard is located in the same building as the ESS, one trunk circuit is shared by both. Because of this frequent need for impedance transformation in operator trunk circuits, the coupler always remains.

(2) Incoming (nonoperator) trunks must frequently be connected to operators for intercept service, etc. Since operator trunk circuits always contain couplers, incoming trunk circuits never retain couplers on a tandem connection.

(3) Outgoing (nonoperator) trunks may be seized by either operator or nonoperator incoming trunks. Since operator trunk circuits always contain the coupler and incoming circuits never contain it, two separate tandem states are provided in outgoing trunk circuits, one with and one without the coupler.

Comparison of the Karnaugh maps of the incoming and outgoing trunk circuits shows that the same number of states is used in each circuit. This points up another reason for rules (2) and (3) above. The incoming trunk circuit must transmit a reverse battery signal to the calling office when the called customer answers, so that the calling office can start charging. This reversal can be made only by a signal distributor operation. Thus the incoming trunk circuit needs two talking states, one for charge and one for free, in both the tandem and local conditions (four states in all). On the other hand, the outgoing trunk circuit detects the battery reversal from the distant office by means of a diode-polarized ferrod sensor in the scanner which transmits the information to the

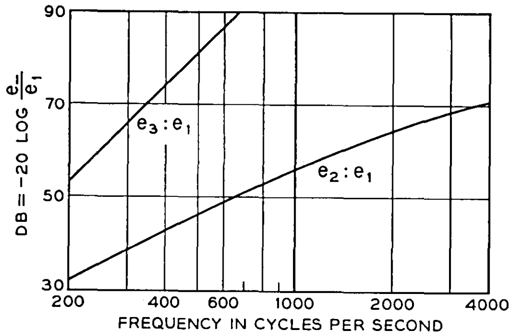

Fig. 15 — Attenuation of noise by frame filter (e_2:e_1) and combined attenuation due to filter and noise canceling transposition (e_3:e_1). See Figs. 3 and 9 for circuits and definitions of e_1, e_2, and e_3.

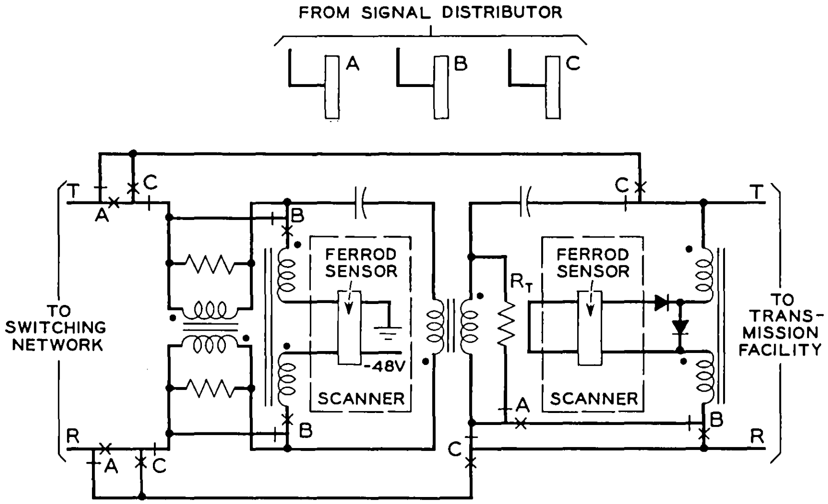

B OPERATED

A OPERATED

0 IDLE	1 TANDEM WITH COUPLER IN THIS CIRCUIT	3 TALK, CALL ORIGINATED LOCALLY	2 HOLD LOOP, OPEN NETWORK PATH
4 BYPASS FOR SIGNALING AND TESTING	5 NOT USED	7 TANDEM, COUPLER IN INCOMING TRUNK CIRCUIT	6 TRANSITION

C OPERATED

SEQUENCE	STATE NUMBERS
LOCAL ORIGINATED CALL	0-4-6-2-3-2-0
TANDEM-(COUPLER IN THIS CIRCUIT)	0-4-6-2-3-1-0
TANDEM-(COUPLER IN INCOMING TRUNK CIRCUIT)	0-4-6-2-3-7-3-2-0

Fig. 16 — Outgoing trunk circuit.

central processor. Thus no differentiation between charge and free talking states need be made by signal distributor operations. This factor makes it easier to provide the two tandem states in the outgoing trunk circuit than in the incoming trunk circuit. With this background discussion, the operation of the circuits in Figs. 16, 17, and 18 should be self-explanatory.

IV. DIGIT TRANSMITTERS AND RECEIVERS

Digit transmitters and receivers, unlike the registers and senders of crossbar and panel offices, are relatively simple circuits. In No. 1 ESS, all digit registration and all control of office operation are carried out by the central processor. Thus, the only major function left to be performed by transmitters and receivers is translation from the "language" of trunks and lines to the "language" of the central processor.

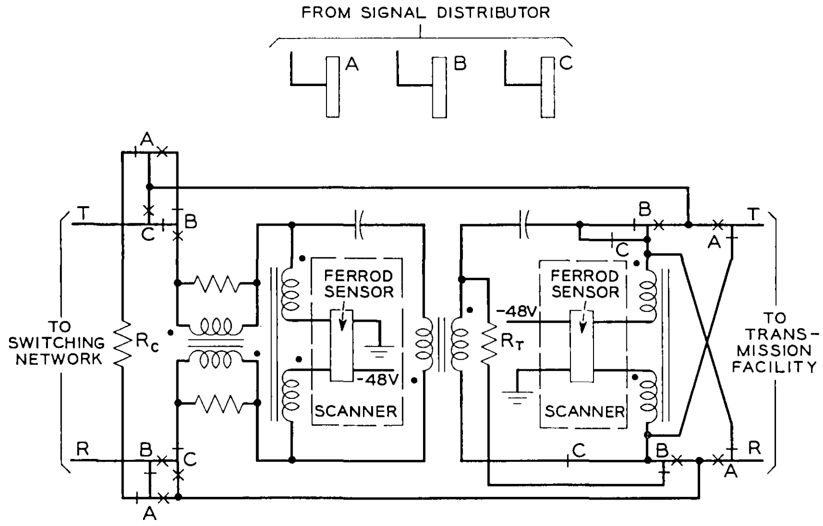

B OPERATED

A OPERATED

0 MONITOR FOR ORIGINATION, HOLD	1 BYPASS FOR SIGNALING	3 TALK LOCAL CHARGE	2 TALK LOCAL FREE
4 NETWORK CONTINUITY CHECK USING R_C	5 NOT USED	7 TANDEM CHARGE	6 TANDEM FREE

C OPERATED

SEQUENCE	STATE NUMBERS
LOCAL TERMINATED CALL	0-1-0-2-0-2-3-2-0
TANDEM CALL	0-1-0-2-6-7-6-2-0

Fig. 17 — Incoming trunk circuit.

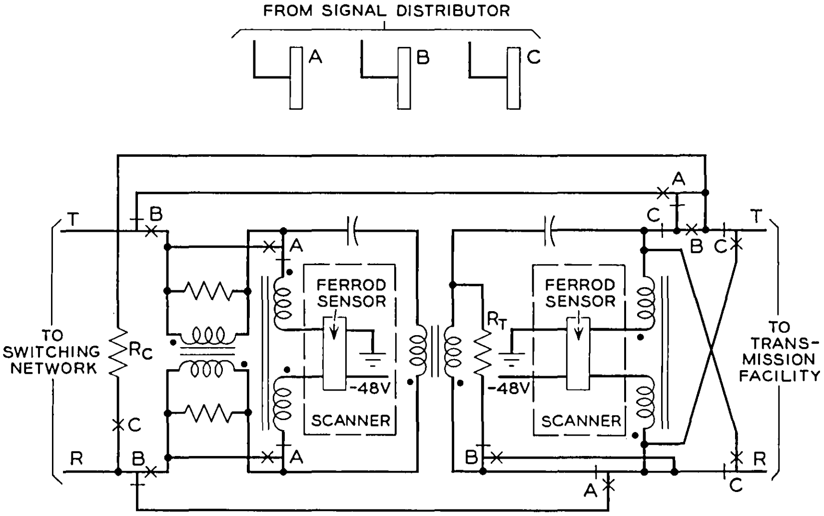

B OPERATED (states 3, 2)

A OPERATED (states 1, 3)

C OPERATED (states 4, 5, 7, 6)

0 IDLE, MONITOR FOR ORIGINATION	1 BYPASS FOR SIGNALING	3 TANDEM (OFF-HOOK)	2 TALK LOCAL (OFF-HOOK)
4 SEIZE AND HOLD	5 NETWORK CONTINUITY CHECK USING R_C	7 TANDEM (ON-HOOK)	6 TALK LOCAL (ON-HOOK)

SEQUENCE	STATE NUMBERS
LOCAL ORIGINATED CALL	0-4-6-2-0
LOCAL TERMINATED CALL	0-1-0-2-3-2-0-2-6-2-0
INCOMING TANDEM CALL	0-1-0-4-5-7-3-2-0
OUTGOING TANDEM CALL	0-4-5-7-3-1-0

Fig. 18 — Operator trunk circuit.

No. 1 ESS, with its network capable of transmitting dc signals at relatively large voltage and current levels (compared with speech signals), permits direct connections between trunks and specialized circuits designed for various types of pulsing. Trunk circuit bypass states remove all series and shunt impedances just as the cutoff contacts in the line circuits do. By concentrating pulsing operations in a relatively small number of specialized circuits, control operations are greatly simplified. For instance, only a few scan points need to be scanned at a high enough rate to detect dial pulses, and only a small number of central pulse distributor outputs are required for the fast and frequent operation of outpulsing devices.

For customer lines, No. 1 ESS provides customer dial pulse receivers as described in Section III. TOUCH–TONE signaling[7] can be added by associating a TOUCH-TONE detector with a customer dial pulse receiver. A combination of the two circuits is called a TOUCH-TONE receiver, and such a combination can receive both conventional and TOUCH-TONE pulsing. The TOUCH-TONE detector is completely transistorized and converts ac tones generated in customer subsets to dc signals required by ferrod sensors in the scanner.

For trunk signaling, transmitters and receivers for dial pulsing, revertive pulsing and multifrequency pulsing are available. In addition, a panel call indicator transmitter has been designed. The multifrequency and dial pulse receivers and the revertive transmitter all detect pulses of the particular type from the transmission facility and convert such pulses to scanner signals. The multifrequency receiver is the most elaborate of the three, and, like the TOUCH-TONE detector, is transistorized.

The multifrequency, dial pulse and panel call indicator transmitters and the revertive receiver all use devices operated by the central pulse distributor to gate out suitable pulses. The multifrequency transmitter contains two transistor oscillators and a mixer to generate the required signal, and six devices operated by the central pulse distributor to cause the oscillators to produce the proper frequencies for each digit. The circuits which send dc pulses need fewer central pulse distributor outputs for the generation of loop opens and closures or high- and low-current conditions. However, they have much longer holding times and require separate circuits to convert their dc signals to voice-frequency tones for pulsing over carrier transmission facilities.

V. EQUIPMENT CONSIDERATIONS

Trunk, junctor and service circuits are constructed from a rather small universe of devices. Just three different codes of magnetic latching relays are used in signal distributor state-switching, and fewer than ten transmission components are needed for the configurations depicted in Figs. 3 and 9. Only in the more elaborate service circuits (which are supplied in relatively small quantities) does the number of different component types reach any appreciable size. Here several codes of transistorized circuit packs are required along with several additional types of relays.

Wire spring magnetic latching relays, although slow by electronic standards, are the practical economic choice when switching operations need not be made very quickly or often. Their ability to switch a number of leads independent of each other and the activating coil is particularly advantageous. They require no holding power and are pulsed operated and released by signal distributors; the coils of all three codes have identical electrical properties.

Junctor circuits and a great many trunk and service circuits contain only latching relays and transmission components. A new series of inductors and transformers was developed for No. 1 ESS, and small mylar-foil capacitors were adopted. Uniformity in component size — all relays and transmission devices are four inches tall or less — makes possible very compact equipment arrangements.

With central processor control, circuits as well as components exhibit uniformity. As can be seen from Figs. 3, 7, 16, 17, and 18, the central processor sees all junctor circuits and many trunk and service circuits in terms of two scan points and three signal distributor points or less. Such standardization led to the development of a family of plug-in junctor and trunk units, using the simple angle-type sheet metal chassis shown in Fig. 19, which mates with the same connector used by printed wire boards.[8] Such units are surface wired with wire-wrap connections. In a typical office, about three-fourths of all trunk and service circuits are plug-in and mount on universal trunk frames as shown in Fig. 20. Junctor frames are similar in appearance. The center bay contains the scanner and signal distributor; the bays on the left and right contain positions for plug-in units. Wiring within each bay is highly standardized as a result of fixed plug-in connector terminal assignments and is completed at the factory.

Sixty-four equipment units (or up to 128 circuits) plug into a standard 26-inch-wide frame. This density is made possible by the use of seven inches of space in front of the frame rather than the four inches conventional mounting would have allowed. The actual mounting area on a frame is only eleven square inches per circuit.

In addition to saving space, a high density of circuits makes possible economical scanner and signal distributor design. Per-point cost drops with increasing size in both circuits, and high circuit densities also produce short lead lengths.

Digit transmitters, receivers and other trunk and service circuits which do not fit this standardized pattern are mounted in miscellaneous

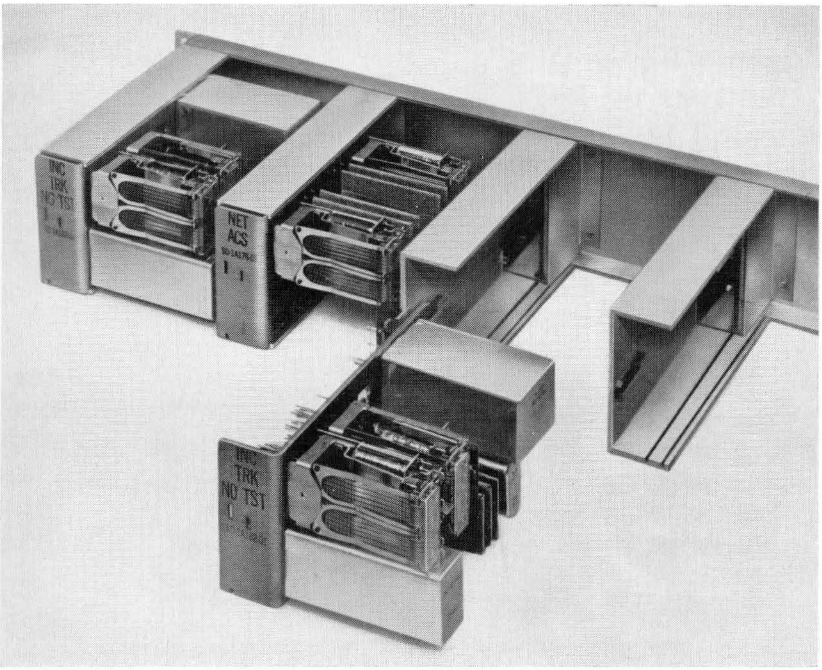

Fig. 19 — Plug-in trunk unit containing two circuits.

trunk frames. These units, typified by the pair of MF receivers shown in Fig. 21, often consist of combinations of semiconductor circuit packs, network and relays. Each unit has one or more terminal strips to simplify frame wiring (on the rear) and installer wiring (on the front).

In contrast to the plug-in units, this fourth of the trunk and service circuits requires detailed engineering to meet specific office requirements. The majority of these designs are single circuit units, although customer dial pulse receivers, TOUCH-TONE detectors, and MF receivers come two to a unit, and certain small auxiliary circuits come as many as 24 to a unit.

VI. MAINTENANCE

6.1 *Introduction*

Trunk and service circuit maintenance is based on three primary objectives: The system must (a) remove any faulty unit from customer use as quickly as possible, (b) pinpoint detected troubles to a very small

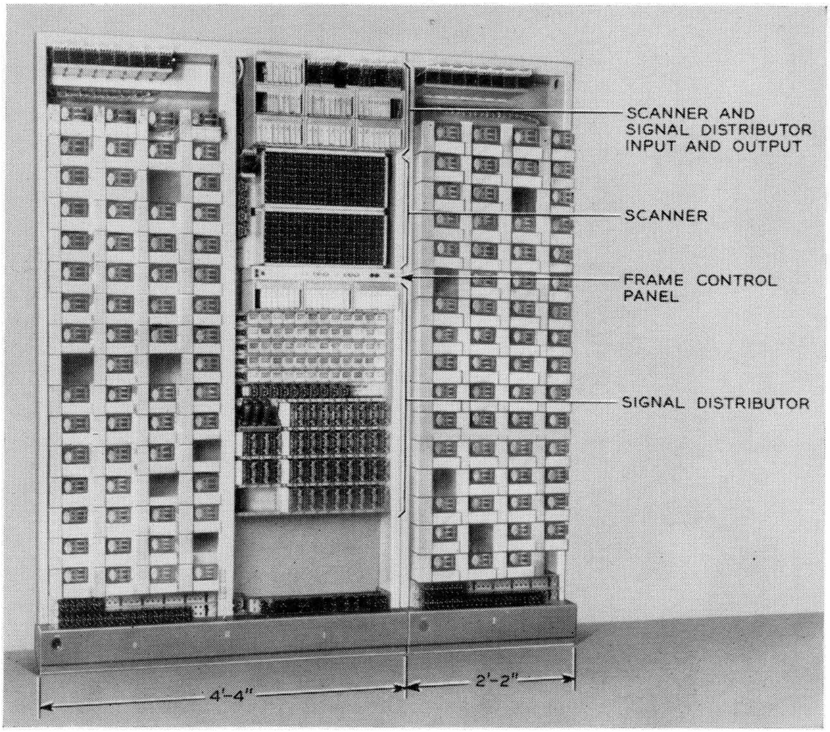

Fig. 20 — Universal trunk frame.

amount of hardware, and (c) keep the maintenance force informed using a minimum amount of teletypewriter output. To accomplish these objectives, symptoms are gathered by observing circuit and system abnormalities, analyzing the abnormalities, and drawing conclusions regarding any trouble detected. Maximum use is made of temporary memory, stored program and the switching network.

The four main phases of trunk and service circuit maintenance, consisting of trouble detection, diagnostic testing, trouble reporting, and circuit disposition, are depicted in the generalized flow chart of Fig. 22.

6.2 *Trouble Detection*

During customer calls, the system is always on the lookout for abnormalities. Holding times of digit receivers and transmitters and other service circuits are measured in the central processor to detect various stuck conditions. Up-checks and down-checks are built into every signal distributor operation. Certain circuits contain special check states for rapid testing of large portions of the circuit. The customer dial pulse receiver and ringing circuits provide tests for certain outside plant troubles on each originating and terminating call. The transfer of supervision from one circuit to another checks network continuity and proper functioning of circuit relays.

Many call abnormalities are indications of trouble conditions which could be in one of several circuits. In these cases, various decisions are made to isolate the faulty circuit. If, for example, upon connection of a line to a dial pulse receiver an off-hook condition is not observed, the fault may lie with the receiver, the network connection, the line ferrod, or the loop. By substituting a second receiver or network path or checking the line ferrod, faults in these areas of circuitry can be deduced.

Most customer call abnormalities are indications of circuit faults; a few are the result of traffic overload conditions. Some screening is done to separate these two conditions and prevent unnecessary testing. Such screening would be used upon failure to receive start-pulsing signals from a terminating office after the originating office transmits seizure signals. Counts are kept in temporary memory for each transmitter indicating the number of times this has occurred. If the counts are evenly distributed over all transmitters, a traffic overload condition is assumed to exist. A diagnostic test on a transmitter is carried out only when its failure count is significantly higher than the failure counts of other circuits.

Outgoing trunks are treated in a similar manner. However, per-trunk memory is not available for this function and time sharing of temporary

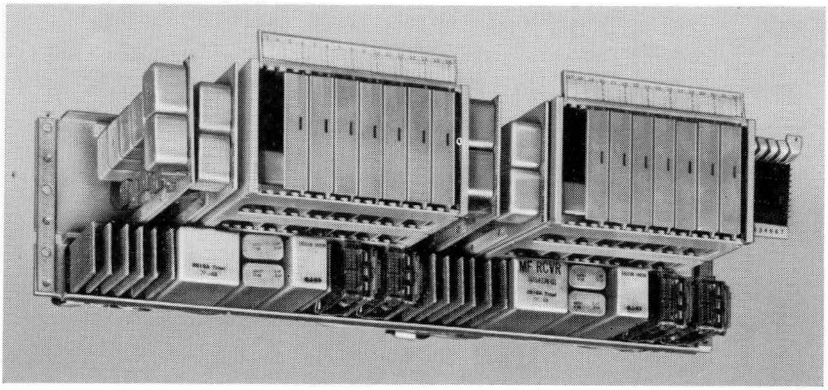

Fig. 21 — Equipment unit containing two MF receivers.

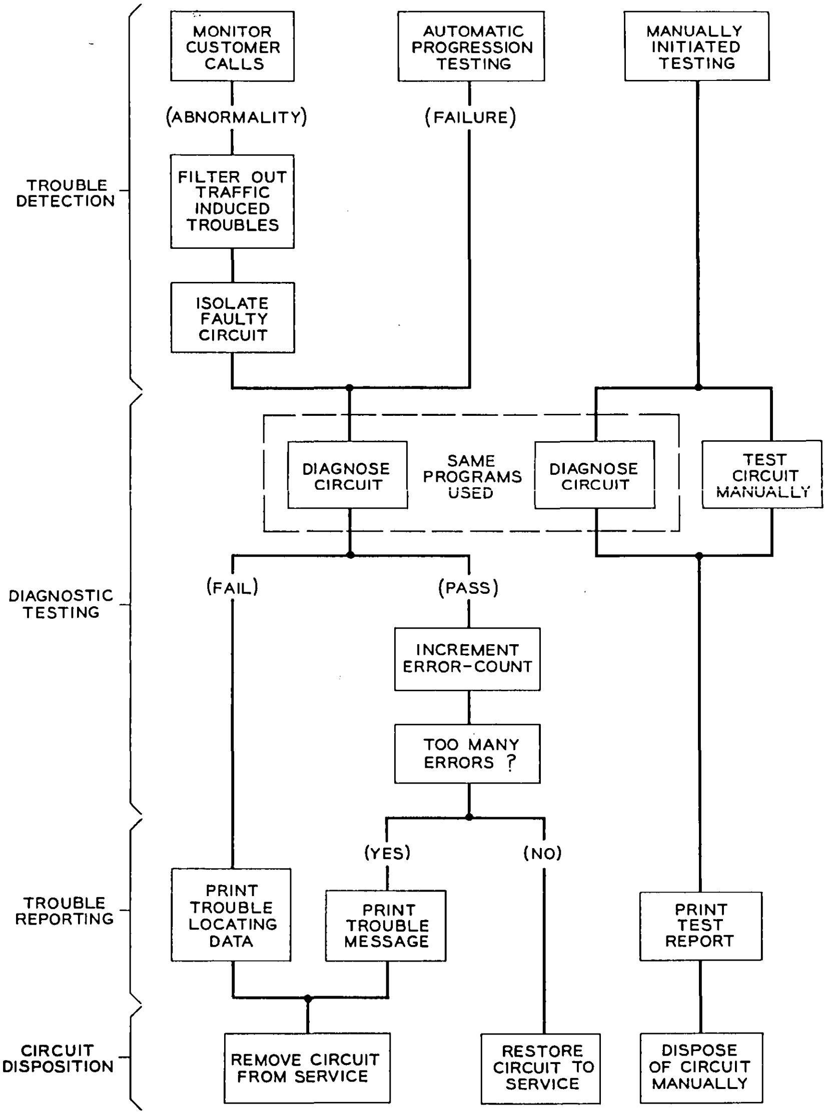

Fig. 22 — Generalized flow chart for trunk and service circuit maintenance.

memory must be used. A few memory words are temporarily assigned to one trunk group or a part of one trunk group to store failure rate information. This information is analyzed in a manner similar to transmitter failure information, preventing undesirable and meaningless testing of outgoing trunks.

While information is being gathered on one trunk group, other groups may be encountering similar difficulties. These indications are counted in a single counter for all the remaining trunk groups in the office. A sufficiently high count will cause detailed observations to be stopped on one trunk group and started on some other trunk group. Thus a small amount of memory can lead to the identification of a faulty trunk with a minimum amount of teletypewriter output for the maintenance man.

6.3 *Diagnosis*

In general, a number of small test segments is needed to test any trunk or service circuit. Each program test segment requires a circuit or combination of circuits to carry out normal functions. Trunk, service, and test circuits, as required, are connected together through the switching network. Correct circuit operation generates a particular set of data, which the central processor stores in temporary memory. If a circuit should malfunction during the test segment, a different set of data, which can be thought of as a "trouble symptom," would be generated. Rather than stopping upon receipt of the first trouble symptom, all test segments are carried out. Much more can be learned from a complete set of symptoms than from just the first one encountered.

When all test segments are complete, a large quantity of data has been accumulated. Diagnosis is completed by comparing these data with a block of "all tests pass" data stored in the permanent memory. Failure to match means a fault exists in the circuit under test, and the test data stored in the temporary memory are printed out for the maintenance man. He can isolate the faulty components through use of a dictionary which was prepared by simulating faults in the circuit under test and recording the trouble symptom.[9]

Many tests are available for customer lines, trunks and service circuits following the basic pattern outlined above.

Outgoing trunks to distant offices can be checked automatically for supervision and digit pulsing as well as tone returned from the distant office. This is done by placing program-initiated and controlled test calls to test lines in the distant office and detecting the response signals from them.

Incoming trunks can be tested for permanent signals, called customer supervision and ability of trunk circuit relays to change state; such tests are made without test calls being initiated by the distant office. Outgoing operator trunks can be tested with the aid of suitable recorded announcements which inform the operator that a test is being made, that the system expects her to take a prescribed set of actions, and that the system will interrogate the trunk circuit responses.

Tests of the type described above are carried out in response to call processing failures. The test programs are also used for automatic trunk progression testing; a control program is added to indicate to the diagnostic programs which circuits are to be tested and in what order. When a trouble is indicated on the first pass through the diagnostic program, the control program treats this as a trouble detected; the diagnostic program test is then repeated. Failure of the second pass causes removal of the faulty circuit from service and a trouble print-out to the maintenance man.

Safeguards are included to prevent the automatic removal of too many circuits from service. Whenever two successive automatic tests of the same type fail, any common test circuitry is checked before normal testing is resumed. Also, the system cannot automatically remove from service more than a fixed percentage of the circuits in any group.

6.4 *Error Analysis*

When a trouble is detected by the failure of a check during call processing or progression testing but a subsequent diagnostic test yields an "all tests pass" result, the system records an "error" for the circuits under test. Errors can be caused by transient noise pulses, unstable circuits, marginal conditions not simulated during diagnostic tests, dirty relay contacts, and the like. Maintenance error counts are kept on a limited number of trunks at any given time. These running counts are updated and compared to removal-from-service criteria. If this comparison shows the error rate to be too high, the trunk is removed from service. When a removal from service occurs, the maintenance man is notified and given the trunk circuit identity. If any trunk does not accumulate enough errors to warrant removal from service, its space in the error counting facility is given to a new trunk where an abnormally high error rate is suspected. Periodically, the maintenance man is given a summary error count to indicate the level of performance of these circuits.

6.5 *Manual Test Control*

The trunk and line test panel (T&LTP) in the master control center,[10] shown in Fig. 23, makes possible another battery of tests. Customer lines, trunks and service circuits can be connected to the master control center by using TOUCH-TONE callers on a master test line. Lines having permanent signals can be connected by a program handling a temporary memory queue which contains the identity of lines awaiting attention. Manual keys control the access circuitry; through additional keys, the line, trunk or service circuit in question is connected to voltmeter or transmission test circuits or jacks for portable test equipment. The TOUCH-TONE caller can also be used to control the setting of relay states in trunk or service circuits; this permits manual troubleshooting.

The TOUCH-TONE caller can be used to specify a trunk or service circuit on which the maintenance man wishes to run a diagnostic program once or repeatedly. Repeated testing is stopped at the end of a complete diagnostic program test if any failure occurs. A teletypewriter message gives the number of times the diagnostic program was completed before failure and the usual diagnostic information on the failed test. If a circuit to be tested is busy, a camp-on feature notifies the maintenance man when it is available.

6.6 *Summary*

Extensive checking during normal customer calls leads to rapid trouble detection. Diagnostic test programs remove faulty units from customer service. Gathering meaningful data during diagnosis pinpoints troubles to a small amount of equipment. Screening before and after diagnostic tests are performed, coupled with the gathering of meaningful diagnostic data, helps keep the maintenance force informed with a minimum of teletypewriter output. Diagnostic programs are available for each type of trunk or service circuit; these programs can be used in many ways both by the machine and the maintenance man. With these aids, the maintenance man should have little difficulty in isolating troubles. Replacement of defective circuits is facilitated by the extensive use of plug-in units.

VII. CONCLUSIONS

The line, trunk, junctor and service circuits in No. 1 ESS have been designed to take full advantage of stored program techniques.

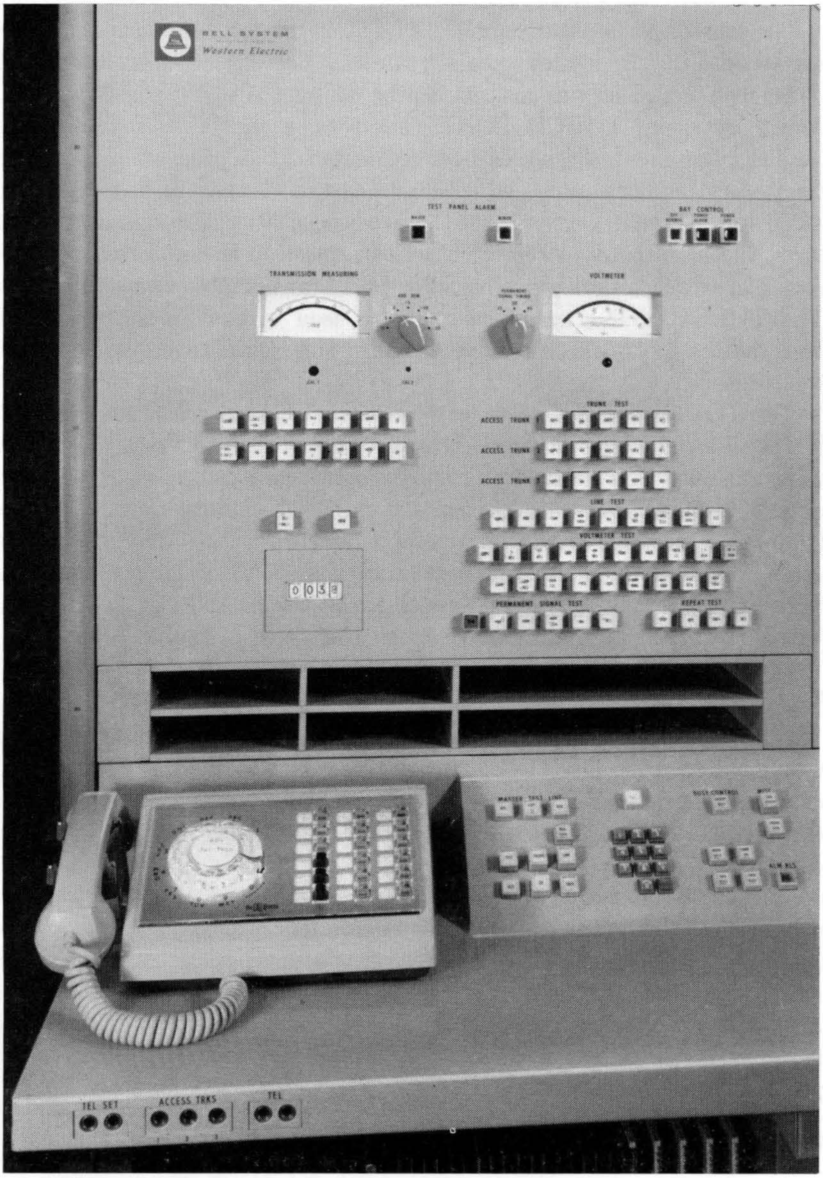

Fig. 23 — Trunk and line test panel in the master control center.

Because the hardware has been reduced to a minimum, the great majority of changes which may eventually be required can be made entirely within the program itself. The isolation of functions in service circuits permits the addition of new features or the deletion of old without changing anything except the service circuits involved and the translation information in memory. Programmed maintenance techniques make possible equally simple changes in testing. With this flexibility, No. 1 ESS should meet successfully the challenges of the future.

VIII. ACKNOWLEDGMENTS

Many persons have contributed to the work described in this paper. The authors are particularly indebted to A. E. Joel and J. M. Nervik for their help during the initial planning stage and A. Feiner and R. E. Staehler for their helpful suggestions and advice. K. H. Muller made many contributions, particularly in mechanical design. Mention should also be made of R. N. Battista, F. Elenbaas and C. G. Morrison for their assistance in connection with voice-frequency signaling.

REFERENCES

1. Harr, J. A., Taylor, F. F., and Ulrich, W., Organization of No. 1 ESS Central Processor, B.S.T.J., this issue, p. 1845.
2. Harr, J. A., Hoover, Mrs. E. S., and Smith, R. B., Organization of the No. 1 ESS Stored Program, B.S.T.J., this issue, p. 1923.
3. Carbaugh, D. H., Drew, G. G., Ghiron, H., and Hoover, Mrs. E. S., No. 1 ESS Call Processing, B.S.T.J., this issue, p. 2483.
4. Freimanis, L. Guercio, A. M., and May, H. F., No. 1 ESS Scanner, Signal Distributor, and Central Pulse Distributor, B.S.T.J., this issue, p. 2255.
5. Karnaugh, M., The Map Method for Synthesis of Combinational Logic Circuits, Trans. A.I.E.E., Part I, Comm. and Electronics, Nov., 1953, pp. 593–599.
6. Hinderliter, R. G., Transmission Characteristics of Subscriber Loop Plant, IEEE Trans. Comm. and Electronics, No. 68, Sept., 1963, pp. 464–470.
7. Battista, R. N., Morrison, C. G., and Nash, D. H., Signaling System and Receiver for TOUCH-TONE Calling, IEEE Trans. Comm. and Electronics, No. 65, March, 1963, pp. 9–17.
8. Chevalier, J. G., and Eisenhart, R. K., No. 1 ESS Circuit Packs and Connectors, B.S.T.J., this issue, p. 2241.
9. Downing, R. W., Nowak, J. S., and Tuomenoksa, L. S., No. 1 ESS Maintenance Plan, B.S.T.J., this issue, p. 1961.
10. Dougherty, H. J., Raag, H., Ridinger, P. G., and Stockert, A. A., No. 1 ESS Master Control Center, B.S.T.J., this issue, p. 2283.

No. 1 ESS Apparatus and Equipment

By J. G. FERGUSON, W. E. GRUTZNER, D. C. KOEHLER,
R. S. SKINNER, M. T. SKUBIAK and
D. H. WETHERELL

(Manuscript received January 15, 1964)

No. 1 ESS provides a greater variety of services than any prior complex switching system, in central offices of greater capacity, but with more highly standardized equipment of much smaller volume. Much of the credit for this achievement is due to the use of fast electronic circuits under control of a generic program. Apparatus and equipment development was aimed at accenting the benefits in this system, disciplining options to concentrate demands on a few standard frame building blocks, minimizing the varieties and codes of apparatus to take advantage of economies inherent in large volume production, and combining these with flexibility and versatility in a dependable, maintainable, compatible system that will provide all services wanted now and in the future.

I. INTRODUCTION

The goal throughout the No. 1 electronic switching system (ESS) development[1] was to achieve the highly standardized modular design which will be most economical to engineer, manufacture, install, operate, maintain, and administer. As a result, No. 1 ESS uses a limited variety of frames as building blocks and relies on a generic stored program to provide most office-to-office variations. The system represents a giant step forward in combining versatility and flexibility with standardization in switching systems.

This advance in the switching art comes at a most appropriate time. Many of the earliest dial offices are nearing retirement age, and most of them are in buildings too full of equipment to accommodate replacing units of crossbar equipment. No. 1 ESS will avoid the cost of establishing new wire centers in new buildings in these cases. The installation of a first No. 1 ESS which is to serve as a replacement for existing equipment can be made in a toe-hold of as little as 2000 square feet of floor space. This can ordinarily be made available. This first installation will replace two or three times its volume of panel or step-by-step equipment and clear space for large future additions. In this way, existing buildings may ultimately house several times as much switching equipment as they were originally designed for.

There is possibility of a further large dividend. In the past, the Western Electric Company has found it generally uneconomical to manufacture large central office equipments in anticipation of demand. There were too many equipment variables as well as too many new features which continually require design changes. As a result, large central offices have been built to customer order. Now, with the elimination of most equipment variables in No. 1 ESS, and with the facility to add new features by program change alone, line assembly in advance of orders promises large savings in production and investment costs. Consolidation of demands will increase lot sizes in the shop and permit a more uniform flow of production. The present interval between placing an order for a switching system and cutting it into service will be shortened. The unproductive investment period will be correspondingly reduced. Savings will be further enhanced by the concentration of demands for those frames used in common by local, tandem, and toll switching systems.

The outstanding attributes of No. 1 ESS equipment include:

(a) provision in the ultimate for the widest variety of services ever offered in one switching system: all of those now available in the several local, toll, and tandem switching systems for large Bell System installations as well as many new services

(b) flexibility for economical growth and the provision of new features not practical in existing systems, plus the ability to work with all systems

(c) use of just one pair of central processors[2] to serve offices varying in size up to 65,000 lines. This permits the replacement of several existing offices with one No. 1 ESS office

(d) highly automated and sophisticated accounting, maintenance,[3] traffic, and traffic-measuring facilities

(e) relatively few small standardized frames of equipment (with most of the usual variables eliminated)

(f) highly standardized floor plans arranged on a modular basis

(g) small building volume for switching equipment ($\frac{1}{3}$ of previous areas, $\frac{1}{4}$ of previous volumes)

(h) wide battery voltage tolerances.

The more important factors in the equipment design are:

(a) Semiconductor devices and new temporary and semipermanent memories in electronic circuits appreciably increase the operating speed of the system.

(b) Programs in memory replace most of the wired logic required in earlier systems; this simplifies circuits and avoids innumerable apparatus and wiring options.

(c) Communication between equipments by high-speed digital pulses over a relatively few pairs further simplifies the equipment and cabling.

(d) Ferreed switches and ferrod sensors and the simplification of their controls and communicating links compress networks.

(e) Shared trunk controls simplify trunks and service circuits.

(f) New techniques are exploited to reduce operating effort as well as to eliminate much apparatus and wiring in equipment for AMA, maintenance, traffic-measuring, and auxiliary services.

(g) New concepts in protector and distributing frames take advantage of electronic memories and other No. 1 ESS innovations to minimize cross-connection changes, jumper lengths, and frame volumes.

(h) The design of all equipment, framework, wiring, and cabling eliminates options wherever possible.

II. NEW EQUIPMENT MODULES ARE STANDARDIZED

Electromechanical switching systems have come along one after another in orderly evolution. New equipment practices have been introduced one or two at a time, and field experience following each innovation has proved its value. No. 1 ESS (see Fig. 1) is so different in so many ways that it represents a switching revolution. This posed a challenge to develop new forms of apparatus and equipment modules that exploit to the full the capabilities of these new system concepts.

Questions which were considered in the combining of components into frames of one consistent design were: (a) How should semiconductor circuits be packaged in a uniform manner with the fewest variables for their many uses throughout the system? (b) How should ferrite sheet and twistor memories be designed for the stores? (c) How should ferreed switches and ferrod sensors be designed to become network crosspoints and scan points? (d) How should simplified trunks and common trunk control equipment be designed? (e) How should AMA recorders and teletypewriters fit the new maintenance and traffic record concepts? (f) How should power, alarm, and auxiliary services be provided?

The design of a frame could not be frozen until all combinations of units which were to be mounted on it were known. Other factors also had to be kept in mind: frames would have to be interconnected in standardized floor patterns in office buildings; the basic package designs would greatly influence frame associations and interframe cabling. In the foreground of all design decisions was the goal of standardization without optional equipment variables.

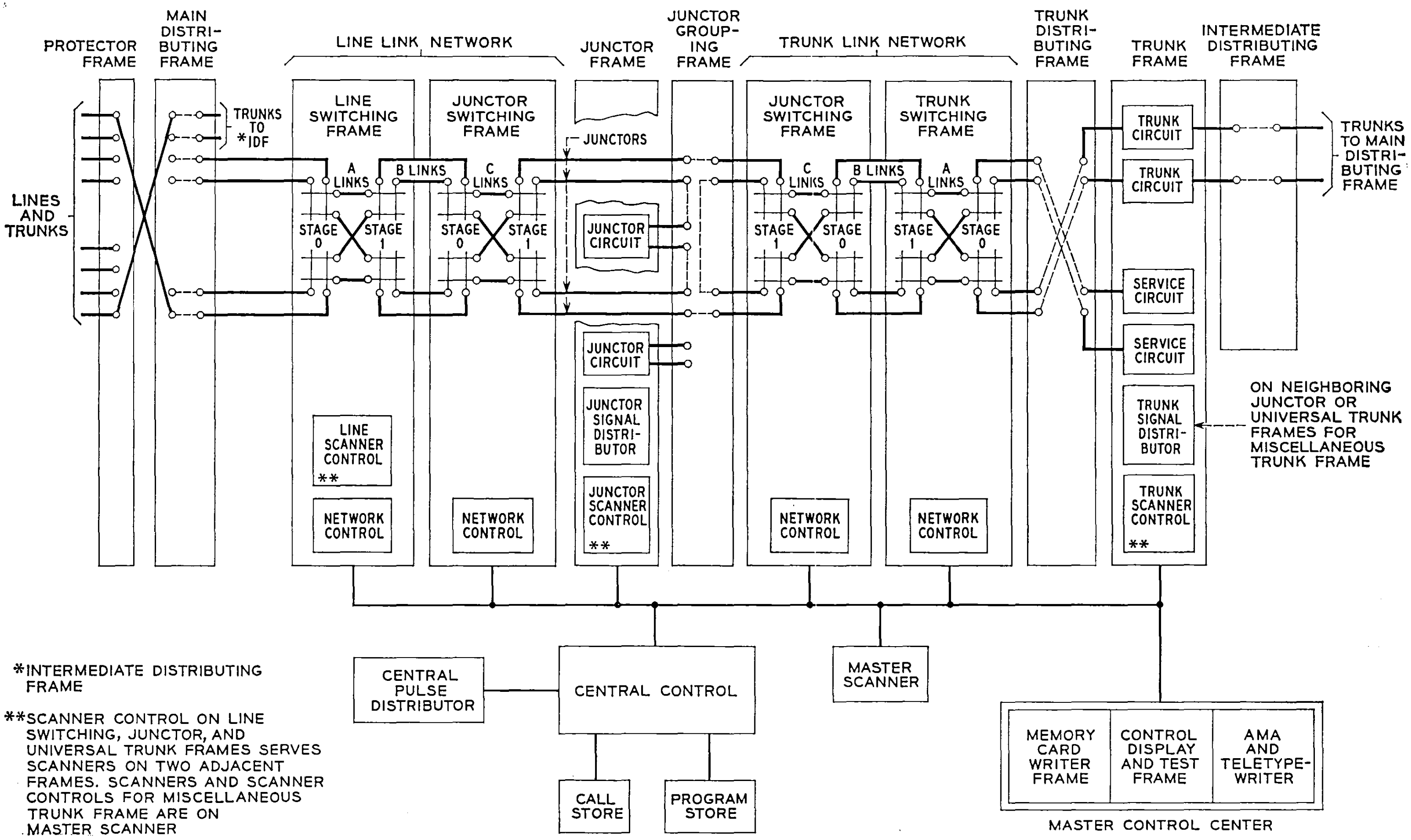

Fig. 1 — Equipment schematic.

2.1 *Basic Packages*

Some of the basic packages developed are: (a) semiconductor circuit packs, (b) ferreed switches, (c) ferrod sensors, (d) trunk and junctor plug-in units, (e) twistor memory, and (f) ferrite sheet memory.

In each of these designs, two basic decisions had to be arrived at simultaneously. First, all possible circuit configurations for functions everywhere had to be considered and reduced to the fewest possible. Second, the innumerable ways for packaging had to be studied and the basic design selected. Then the variables in each case had to be adapted to the standard package with the very minimum of codes. This brought production economies as well as maintenance economies in both equipped and spare packages.

2.2 *Frames*

Concurrently with the basic package developments, frame designs were explored. The frame structure had to be as nearly universal as possible to accommodate all varieties of equipment combinations in the best manner for shop and field. Frames for earlier large dial systems were of a variety of constructions but generally were single-sided and 11 feet, 6 inches high. Many equipment and building standards had been developed over the years around these designs. For the Morris, Illinois, ESS trial installation,[4] double-sided cabinets 7 feet high with doors front and rear were decided upon to minimize lead lengths and to facilitate air conditioning. Requirements for this new system had to be carefully studied to arrive at the ideal frame. Should it be single-sided or double-sided? Should it follow the 11-foot, 6-inch standard, or were there compelling reasons for a new height? Should it be an enclosed cabinet?

2.2.1 *Double-Sided versus Single-Sided Frames*

A study of double-sided versus single-sided frames proved that the very minor floor space advantage in favor of double-sided frames was offset by production and maintenance advantages favoring the single-sided frame. Air conditioning of individual frames, which dictated enclosed double-sided cabinets for Morris, was no longer a requirement. In addition, frame covers were eliminated to reduce cost and to ease system maintenance.

2.2.2 *Frame Studies*

A series of studies determined that the single-sided frame should be 7 feet high with modular widths of 1 foot, 1 inch. Reasons for adopting this design fell into three classes.

(*i*) *Equipment Arrangements:*

(a) It fits the circuit functions into more orderly, symmetrical equipment modules.

(b) It provides short, direct pulse leads for intra- and interframe communication.

(c) It gives floor loads compatible with existing buildings.

(d) It permits economical use of office volume with attractive equipment and building designs.

(*ii*) *Maintenance:*

(a) Access from the floor is preferable to that from rolling ladders.

(b) Accident hazards are less with no rolling ladders.

(*iii*) *Building Costs:*

(a) Considering existing buildings with high ceilings, a possible small floor space loss is offset by savings from the omission of auxiliary framing and rolling ladders.

(b) Considering buildings with low ceilings, there are important additional savings in new building costs and in the ability to install 7-foot frames in commercial buildings.

2.2.3 *The Frame Adopted*

The frame finally adopted is shown in Fig. 2. Sheet metal uprights of 1-inch by 5-inch cross section are centered on the base to provide an $8\frac{1}{2}$-inch depth for apparatus on the front and a $3\frac{1}{2}$-inch depth for wiring on the rear. Frames having five widths on 1-foot, 1-inch modules provide for all equipment.

III. FRAME EQUIPMENTS ARE STANDARDIZED

No. 1 ESS employs new types of apparatus for most of its functions: ferreed switches for network switching; ferrod sensors for scanning; magnetic latching wire spring relays in trunks; twistor and ferrite sheet memories; semiconductor devices in plug-in circuit packs for almost all logic and controls; and others as described in detail in Section V. These components, as needed, are arranged on the 24 frames listed in Table I in ways which make each frame, as nearly as practicable, a completely functional building block free of options. No. 5 crossbar at the same stage of development had approximately 3 times as many frame equipments, 10 times as many trunk equipments, and 100 times as many coded variables for apparatus and wiring options.

The equipment arrangements developed for the different frames follow a standard pattern. Terminal strips, bus transformers, and other apparatus

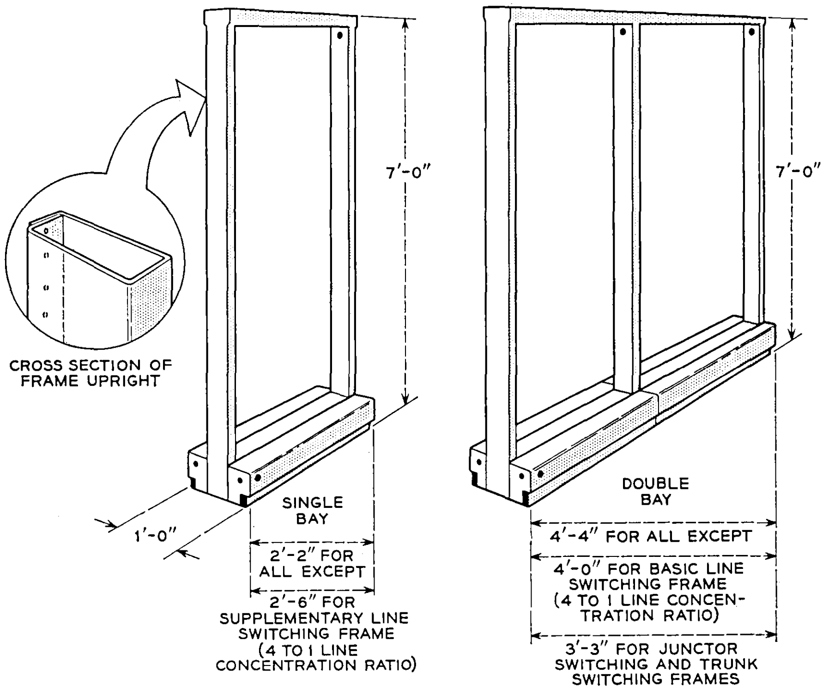

Fig. 2 — Frame.

requiring little maintenance are at the top of each frame, so that practically all maintenance work can be done without the use of stepladders. Frame filters, fuses, and power cutoff relays, as required, are located at the bottom of each frame. Appliance outlets are in the front and rear of each frame base. Every frame has a control panel with telephone and spare jacks and pin jacks for −48 volts, +24 volts, ground, and high-resistance ground. Most frames, in addition, require alarm, off-normal and out-of-service lamps, power cutoff keys, and some keys for special purposes; these are also mounted on the frame control panel located at a convenient height above the floor.

3.1 *The Control Panel*

The typical control panel shown in Fig. 3 carries a group of push-button keys, indicator lamps, and test jacks in a perforated steel housing. The housing acts as a shield to protect adjacent electronic equipment, while the perforations permit vertical passage of air if needed to cool

TABLE I — FRAMES, ABBREVIATIONS, AND LENGTHS

Frame	Abbreviation	Length		Remarks
		Feet	Inches	
Central control	CC	8	8	2 per office
Program store	PS	10	10	
Call store	CS	2	2	
Master scanner	MS	2	2	
Central pulse distributor	CPD	2	2	Operate in pairs
Master control center	MCC			1 per office
memory card writer	MCW	2	2	
control display & test	CDT	4	4	
AMA-teletypewriter	AMA-TTY	4	4	
Line switching	LS			4 to 8 per LLN
2 to 1 line concentration (home or mate)		4	4	
4 to 1 line concentration				
basic (home)		4	0	
supplementary (mate)		2	6	
Trunk switching	TS	3	3	4 to 8 per TLN
Junctor switching	JS	3	3	4 per fully equipped LLN and TLN
Junctor	J			
home or mate basic		4	4	
home or mate supplementary		2	2	
Universal trunk	UT			
home or mate basic		4	4	
home or mate supplementary		2	2	
Miscellaneous trunk	MT	2	2	
Miscellaneous	M	2	2	
Recorded announcement	RA	2	2	
Power distributing	PD	2	2	
Miscellaneous power	MP	2	2	
Ringing and tone	RT			
½-amp capacity		4	4	
6-amp capacity		6	6	
Protector	PROT	6	6	Modules of these lengths are ordered as required
Main distributing (or IDF 8′ high)	MDF →	6	6	
Intermediate distributing	IDF —			
Trunk distributing (or IDF 7′ high)	TDF →	4	4	
Junctor grouping	JGF	2	2	Ordered in pairs

that equipment. The keys are used primarily to disconnect or restore power to various sections of the frame for maintenance purposes, although test functions are also sometimes provided. The keys are mechanically interlocked to guarantee that if one duplicated frame or bus control section has power off, it must be restored to "power on" before the mate control section is turned off. Red lamps indicate trouble conditions, including "power off" in any section, while white lamps indicate an "off normal" condition and whether either frame control is "out-of-service" for any reason. The telephone jacks at the left end of the panel permit convenient telephone connections to maintenance or test personnel at other locations in the office, and the pin-type jacks provide voltage sources for frame maintenance or for portable test sets.

3.2 *Filter and Fuse Panels*

Each frame is equipped with a filter panel designed to restrict the rate of current change on the frame supply feeders. This filter limits the noise transmitted to other frames via the centralized power distributing frame. These filter panels are located in the frame base immediately below the frame fuse panels. Thus the power feeders, terminating on the filter panel after entering via the frame upright, have a minimum exposure to stray noise sources. Power cutoff relay panels, when required, are located in this same area of the frame.

3.3 *The Circuit Packs*

The plug-in circuit packs engage connectors on an apparatus mounting which occupies 4 inches of vertical space. The 36A apparatus mounting is used for the great majority of circuit packs. Three adjacent mountings fit across a 2-foot, 2-inch bay, and each mounts as many as 16 circuit packs on 0.4-inch centers, or correspondingly fewer of those packs that require 0.8-inch or 1.2-inch centers. The 38A apparatus mounting mounts a single circuit pack and is used in locations requiring too few circuit packs to justify the larger mounting.

3.4 *Relay Equipment*

Many trunks have their relays and other components for one or two circuits on small plug-in units which mount interchangeably in supports and sockets on a trunk frame which is universally wired for all of them.

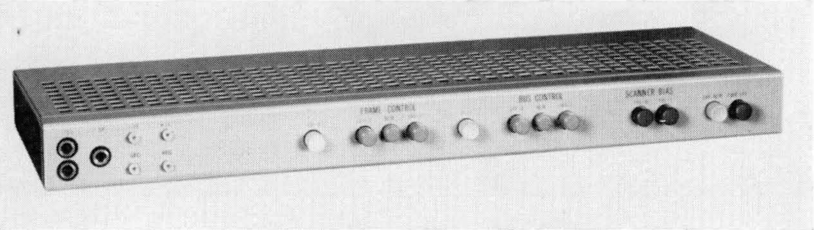

Fig. 3 — Typical frame control panel.

3.5 *Ferreed Switches and Ferrod Scanners*

The ferreed switch affords much greater flexibility than the crossbar switch in possible arrangements of crosspoints and controls. Advantage has been taken of this flexibility to provide the best switch array for each stage of line and trunk switching in the networks. Line, trunk, junctor, and master scanners all have 1024 (64 × 16) point matrices equipped with ferrod sensors having the proper operating characteristics.

3.6 *Terminal Strips and Bus Transformers*

A universal design of terminal strip and transformer using molded wire techniques is used for all interframe wiring which connects at the top of any frame (see Fig. 4). The conductors of bus systems, which address the frames, are terminated on ferrite core pickoff transformers. These transformers are molded directly into the molded ladder terminal arrays of the terminal strips. Several codes of these bus transformers, terminal strips, and combination units have been made available.

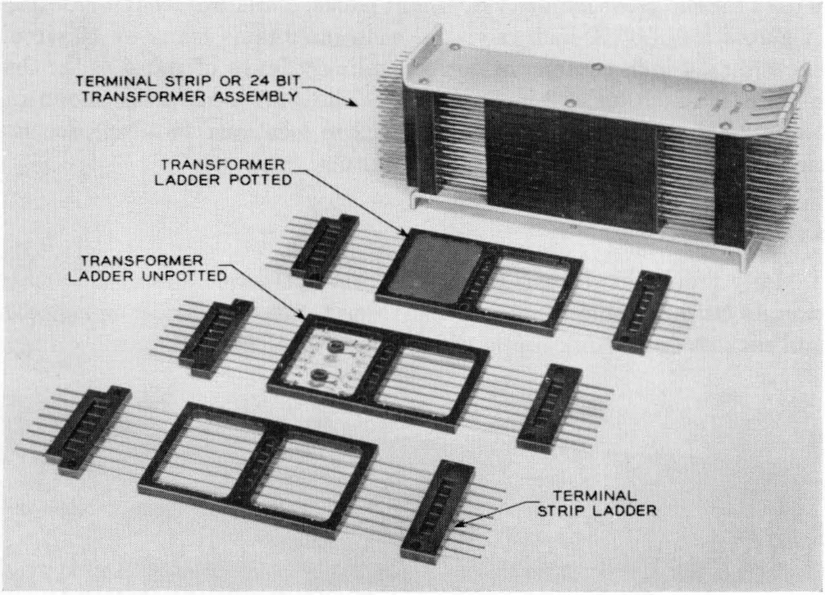

Fig. 4 — Terminal strip and transformer for interframe bus system.

3.7 *Frame Wiring*

In general, all shop wiring is to terminals on the rear, and installer wiring is to terminals on the front of frames; and, in general, both use 26-gauge conductors. Shop wiring includes surface wiring, loose wiring, and local cable of conventional kinds, as well as some new wiring techniques. Where high densities of circuit packs and wired interconnections exist, as in central control, special wiring procedures prescribe specific routings for surface wiring, loose wiring, and local cable.

3.8 *Designations*

Designations on equipment give frame name, frame and bay numbers, and specific functions in accordance with nomenclature and abbreviations standardized for the system.

IV. FRAME ARRANGEMENTS IN AN OFFICE ARE STANDARDIZED

Engineering, installing, operating, and maintenance costs are reduced when frame arrangements in an office are standardized. Important considerations here involve: (a) arrangements of frames on floors, (b) office and frame capacities, (c) cable rack and office lighting, (d) end guards for end of frame line-ups, and (e) interframe cabling and wiring.

Much attention has been given to each of these items as well as to appearance, with results as shown in the figures. Missing from these illustrations, however, is an important feature — the attractive color scheme. Cable rack enclosures, end guards, and frame bases are a dark shade of blue, which makes an attractive contrasting border around the light blue-gray of the frames within each line-up.

4.1 *Floor Plans*

A universal floor plan pattern has been developed which:

(a) Grows naturally from the smallest to the largest installation. With a few minor variations, it makes efficient use of floor space at every size and for all traffic concentrations.

(b) Permits an office to start with one line concentration ratio and convert later to another if traffic density changes make it desirable.

(c) Provides short, direct cable runs that minimize cable costs and electrical interference.

(d) Locates the master control center, central controls, and stores

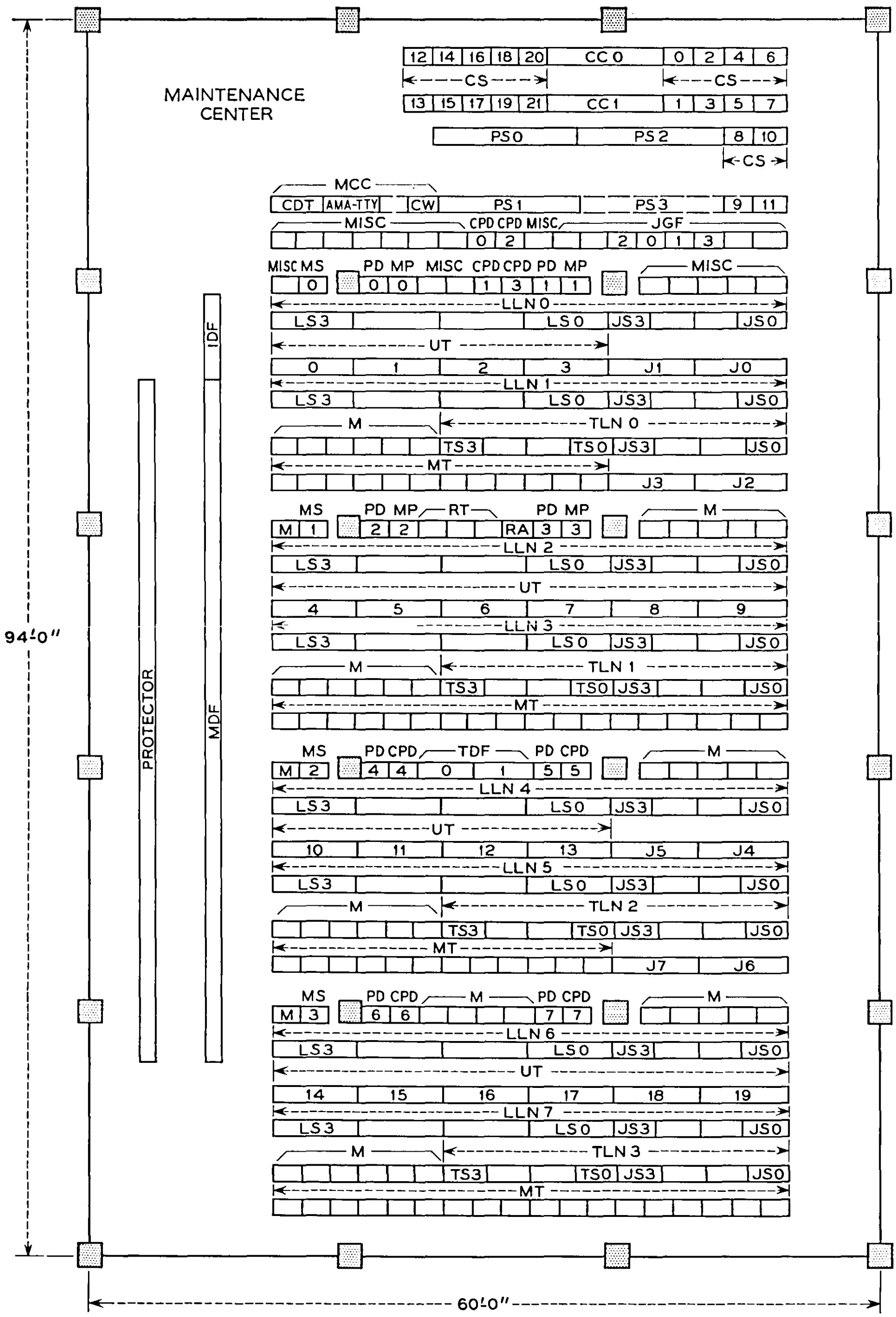

1. SHOWN ARE 8 LLN's FOR 32,768 LINES WITH 4 TO 1 LINE CONCENTRATION RATIO AND 4 TLN's FOR 4,096 TRUNKS WITH 1 TO 1 TRUNK CONCENTRATION RATIO
2. JGF IS CENTRALLY LOCATED FOR ULTIMATE GROWTH TO DOUBLE THE OFFICE SIZE WHETHER GROWTH IS TO REAR, TO ONE SIDE OR, TO ANOTHER FLOOR
3. SEE TABLE I FOR KEY TO ABBREVIATIONS

Fig. 5 — Typical floor plan.

together in preferred locations in one area. Space for about half of the stores is in the initial building, and the remainder is in an addition.

(e) Employs standard building bays and provides for building growth to the rear, to one side, or to a floor above.

(f) Aligns the protector frame and the main distributing frame (MDF) with associated network frames for orderly growth together, in a way that automatically shortens cables and MDF jumpers.

(g) Permits the same pattern to be followed in all new buildings and adapted to existing buildings.

The pattern, as applied to a typical office, is shown in Fig. 5.

The new MDF is parallel to the long building wall, with all frame line-ups perpendicular to it. Central control, store, and maintenance frames are in preferred locations in one area. Network, trunk, and other frames are in building bay modules which grow with the MDF.

Buildings will require a minimum ceiling height of 10 feet under beams. Floor loads are the standard 150 pounds per square foot: 100 pounds for equipment and 50 pounds for cable rack, interframe cable, and maintenance personnel.

4.2 *Office and Frame Capacities*

The more important capacities are shown in Table II.

4.3 *Cable Rack and Office Lighting*

The cable rack, which conceals and shields all interframe cabling, is frame-supported over each line of frames and across aisles (see Fig. 6). A cable rack stanchion ($3\frac{1}{2}$ inches in diameter) is used to support cable rack where frames are omitted for spans of 10 feet or so. The cross-aisle racks are placed at each end of a line-up and at intermediate points as needed. This system of frame and cross-aisle cable racks not only provides for routing and segregating of cables but rigidly interconnects the frames and line-ups, giving great stability to the overall structure.

Also, since the frames are low and the aisles are largely free from overhead racks, excellent illumination is obtained either from ceiling lights or from frame-supported lighting, both of which are standardized.

4.4 *End Guards*

End guards are used at main aisle ends of frame line-ups. Each has a swinging door to give access to cables and equipment inside. Wherever one or more frames are omitted in a line-up, each exposed frame end is dressed with an end guard.

TABLE II — OFFICE CAPACITIES

Capacity		Number per Office
Total busy hour calls (100 seconds each), intraoffice plus incoming plus outgoing		100,000 approx.
Directory numbers		
number groups		128
numbers per group		1,000
office codes		32
Networks		
Line link network with 2 to 1 line switching		
Conc. Ratio	Lines	
2 to 1	32,768	16
2½ to 1	40,960	
3 to 1	49,152	
3½ to 1	57,344	
Line link network with 4 to 1 line switching		
Conc. Ratio	Lines	
4 to 1	65,536	16
5 to 1		12⅘
6 to 1		10⅔
7 to 1		9⅐
8 to 1		8
Trunk link network		
Conc. Ratio	Trunks	
1 to 1	16,384	16
1¼ to 1	20,480	
1½ to 1	24,576	
1¾ to 1	28,672	
2 to 1	32,768	
Frames		
Central control		1 pair
Program store		6
Call store		37
Master control center		1
Master scanner		As required
Central pulse distributor		8 pairs
Power distribution		1 per 400-amp peak load for each of −48 volt and +24 volt
Ringing and tone (½-amp capacity on 2 bays or 6-amp capacity on 3 bays)		1
Junctor grouping frame modules		4 pairs

Equipment in the main aisle end guards (see Fig. 7) includes plates of bus terminating resistors.

On the outside of the end guards are the aisle alarm lamps, the aisle directory for designating the frames in each line-up, and light control switches. A spare fuse holder is provided on the door.

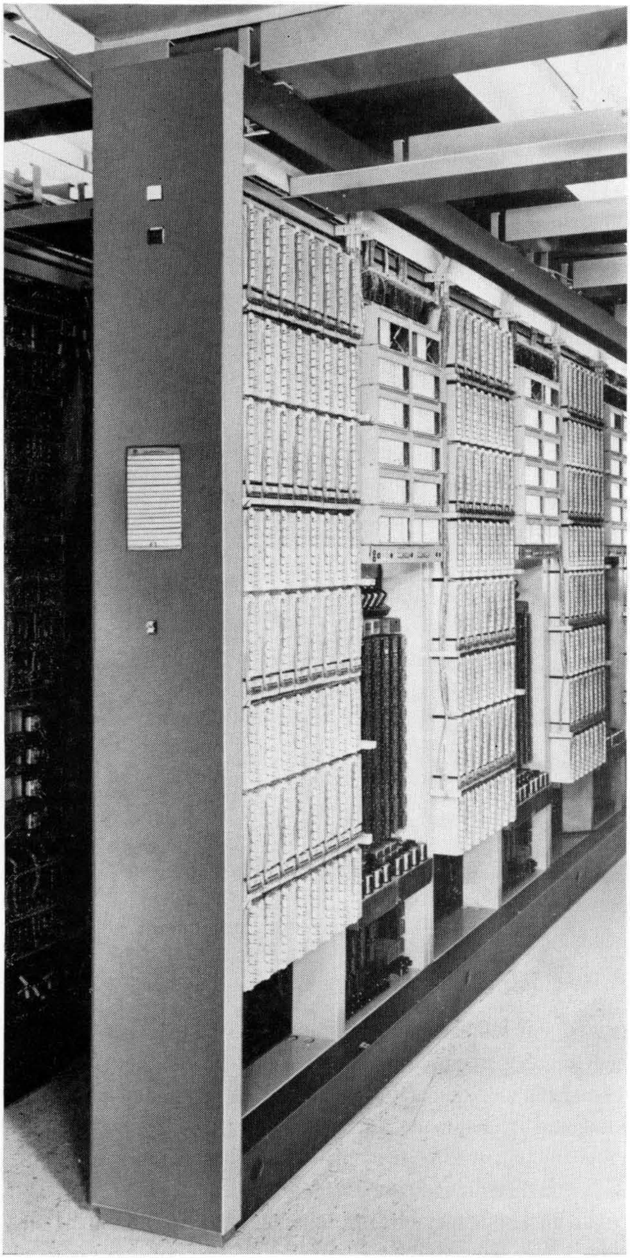

Fig. 6 — Typical maintenance aisle showing cable rack and lighting.

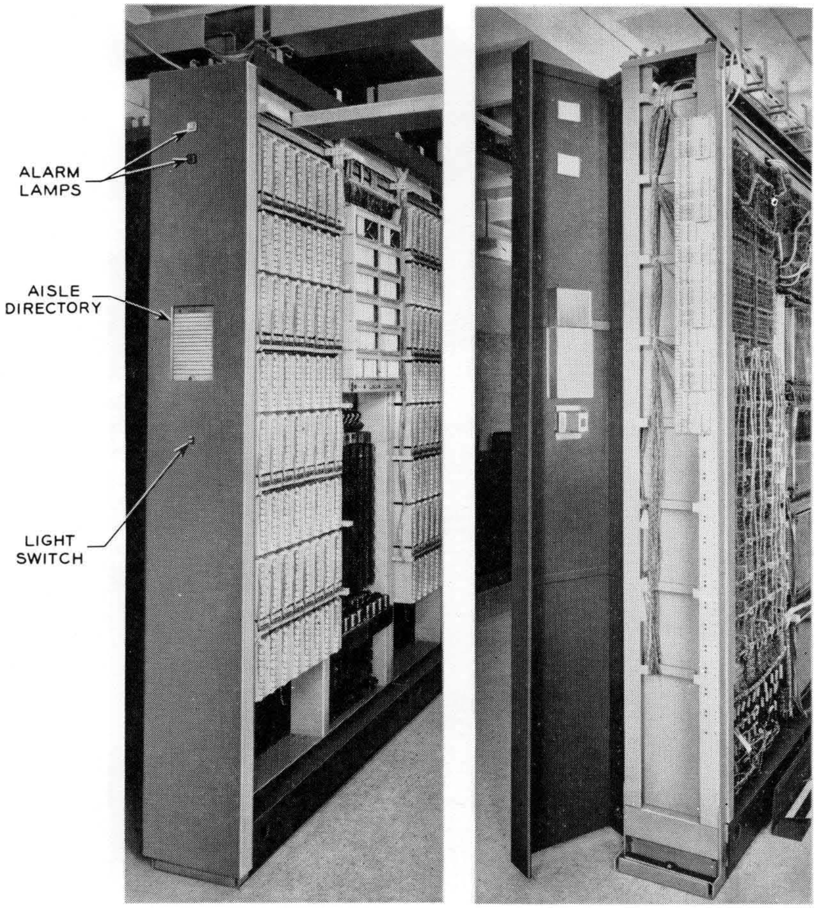

Fig. 7 — End guard and equipment.

4.5 *Interframe Cabling and Wiring*

Switchboard cables and dc and ac power cables for system loads are run in accordance with specific rules to minimize electrical interference. There are four classes of cables which are segregated in their own cable rack sections and broken out and connected in specified ways. The cable rack above each frame line-up has three separate channels on an upper level and a fourth centered below them. Address and answer bus cables are segregated in the lower channel and scanner cables in the front upper channel; both are terminated directly on transformers and terminal strips at the top of the frames. The dc power cables are segregated in the rear upper channel and run down the frame uprights to filters and fuse panels. Tip and ring and relay control cables are in the larger central upper channel, and these run to frame or unit terminal strips or to ferreed switch terminals.

Power wiring for the appliance outlet on each frame is run in the shop. The installer then connects the wire ends at a frame junction by inserting them into the connectors in the appliance outlet on the adjacent frame.

Busways deliver power to the end frame in each line-up. Power wiring for lighting is run in busways to the fixtures over each maintenance aisle. The lamps have switches in the end guards of line-ups connected by low-voltage wiring to relays on the fixtures.

Special frame insulating practices are followed, and frames are connected to ground at only one point to avoid electrical interference from stray ground potentials and currents.

V. APPARATUS TYPES AND QUANTITIES

No. 1 ESS equipment consists to a large degree of new types of switching apparatus. To achieve system economies, a concentrated effort has been made to restrict the varieties and codes of apparatus used to an adequate but limited catalog of each apparatus type. This code concentration permits shop and field economies both in equipped frames and in spare parts.

5.1 *Number of Apparatus Codes and Their Quantities*

The number of codes (or types) of each of the more usual apparatus elements in No. 1 ESS is given in Table III, together with the quantity of each in a typical 10,000-line office.

Approximately 13 per cent of all circuit packs will be of one code and 65 per cent will be of 17 codes.

Since the typical office uses 5.5 transistors, 16 diodes, and 20 resistors per line, the unit costs for these components have a marked influence on the office cost.

5.2 *Semiconductor Devices*

Three transistor codes are used: one general-purpose type for amplifiers and switches, one power transistor type, and one pnpn switch.

Eight diode codes are used: three high-speed types to perform the bulk of the logic functions, three voltage regulator types, one level shifter, and one click reducer.

TABLE III — APPARATUS CODES AND QUANTITIES

Apparatus Elements	No. of Codes	Quantity in Typical 10,000-Line Office
Transistor	3	55,000
Diode	8	160,000
Resistor	23 types	200,000
Transformer or inductor	21 types	26,300
Capacitor	30 types	23,400
Ferreed switch (8 × 8 Type)	4	3,400
Ferreed switch (1 × 8 Type)	2	2,000
Ferrod sensor	4	8,000
Relay	78	14,000
Ferrite sheet memory	1	16
Twistor memory	1	32
Circuit pack	150	12,600

5.3 *Passive Components*

All passive components (resistors, transformers, inductors, and capacitors) for the system were selected from a master list for each class which was catalogued specifically for No. 1 ESS to limit varieties and to assure universal use of high-quality components having reasonable costs. Types were selected with the preferred construction for each desired range of electrical characteristics, and with particular attention to tolerance, physical size, life, aging stability, and failure mode (principal cause of failure at normal end of life).

5.4 *Circuit Packs*

In order to minimize the number of semiconductor circuit pack codes, it was necessary to develop several standard circuit pack arrangements of logic gates. Tests were made of a variety of wired gate packages to determine best circuit and semiconductor arrangements. Following this development work, pilot production of printed wire board designs was tested in brassboard circuits.

A family of packages evolved from this program. The semiconductors and many other small components are mounted on printed circuit packs which engage plug-in connectors in die-cast aluminum apparatus mountings. These mountings accommodate as many as 16 packs on 0.4-inch centers or correspondingly fewer on wider centers. The two packs removed from the mounting in Fig. 8 are typical for low-level logic circuits. They are made from $\frac{3}{32}$-inch thick phenol fiber of a fire-retardant grade and have components mounted on one side with printed wire interconnections on the other. The printed wire paths are gold plated at one end of the board to form 28 connector terminals. The packs are $3\frac{3}{4}$ inches wide and $6\frac{7}{8}$ inches long, providing space for approximately 70 typical ESS components. The number of components per circuit pack varies from as few as 6 relatively large transformers to as many as 84 smaller components, including resistors, diodes, and transistors. This size of pack and number of terminals reflect experience with the Morris trial and represent a compromise among such factors as total contacts required for the system, lead lengths, cost, and number of codes. As shown in the figure, each circuit pack carries a colored label with a code number on the protective aluminum strip at the front. For proper selection, this color and number must match a similar label on the hinged strip at the top of the mounting.

Each apparatus mounting for circuit packs has this hinged designation strip across the top with designation cards, front and rear, to show for each circuit pack its position in the mounting, its apparatus code, and its color code. Circuit packs are physically, although not electrically, interchangeable.

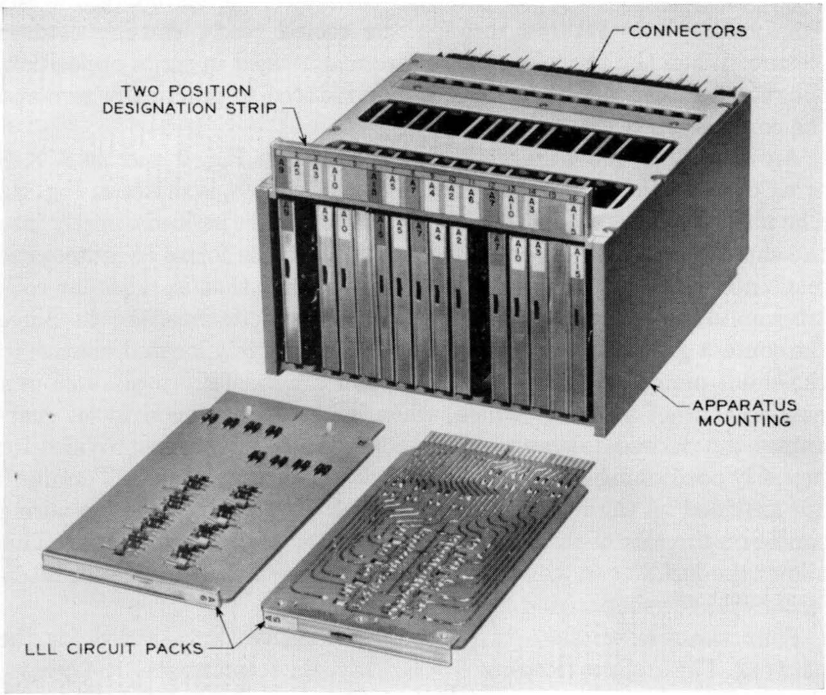

Fig. 8 — Circuit packs and apparatus mounting.

Each circuit pack bears one of three color codes: red, yellow or blue. No damage will be done if the wrong circuit pack is plugged into a connector designated with the same yellow or blue color code, although the circuit will not function properly if the codes do not match. The red packs must be plugged into connectors having the same code and color designation.

5.5 *Ferreed Switches*

The ferreed switch was designed to serve as the crosspoint element for No. 1 ESS networks. It is a two-wire, magnetically latched, pulse-operated device. It consists of two small sealed reed switches which are operated and released by controlling the magnetization of two adjacent rectangular Remendur plates. Remendur, an alloy of iron, cobalt and vanadium, is a magnetic material with a square hysteresis loop. Each plate is magnetically divided into two independent halves by a low carbon steel shunt plate, which also provides the mechanical structure for assembling the crosspoints into various arrays of 8 × 8 switches. When the two halves of each plate are magnetized series-aiding, the flux from both plates returns through the sealed reeds, causing contact closure. When the two plate halves are magnetized in series-opposition, the return flux through the reeds' gap is reduced to practically zero and the contacts open.

An individual two-wire crosspoint is shown in Fig. 9 and an 8 × 8 array of these crosspoints, known as a ferreed switch, is shown in Fig. 10. The phenolic forms on which the coils are wound are molded directly into the shunt plate. The windings are wound on these forms by automatic machines which provide a checkerboard pattern; that is, adjacent coils are wound in opposite directions to reduce magnetic interference. Since the contact gap in the sealed reeds must be accurately located relative to the shunt plate, both reeds of a crosspoint are carefully positioned in a molded contact assembly which, when inserted in the coil form, guarantees the desired tolerances. This contact assembly also provides for properly positioning the Remendur plates within the coil form. Terminals are provided on the front and rear of the switch so that all shop wiring can be on the rear of the frame and all installer wiring on the front. This allows the installer to work in the wider equipment aisles without interfering with the shop wiring.

Four varieties of these two-wire switches have been coded for the network. The first provides one 8 × 8 array, the second two 8 × 4 arrays, the third 16 × 4 of 8 array (which gives 16 lines access to 8 links but each line access to only 4 of these 8), and the fourth four 4 × 4 arrays.

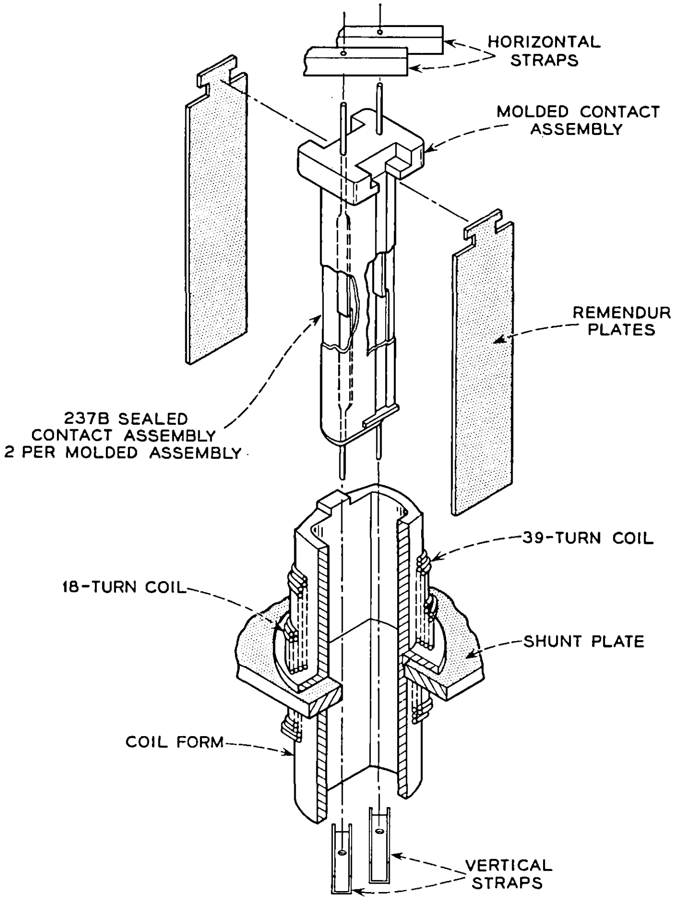

Fig. 9 — Two-wire ferreed assembly.

Another version of the ferreed, used for cutoff and test access, has two sealed reed switches mounted between two rods. One of these is permanently magnetized, and the other, a Remendur rod, has its polarity controlled by a winding, as shown in Fig. 11. Eight of these bipolar crosspoints are assembled into one coded switch, shown in Fig. 12. Two varieties of these switches are used The first has both ends of all crosspoints brought out to terminals, thus providing eight individual crosspoints in one package. The second has one side of all crosspoints strapped together to provide a 1 × 8 switch.

A summary of the characteristics of these ferreed switches is shown in Table IV.

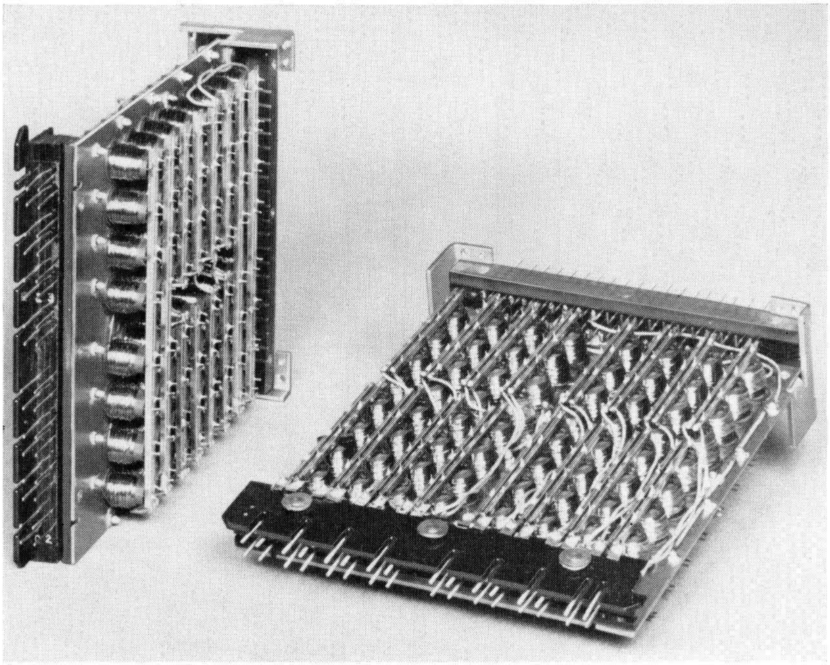

Fig. 10 — 8 × 8 ferreed switch.

5.6 *Ferrod Sensors*

The ferrod sensor, a current-sensing device, has been developed as the building block for all No. 1 ESS scanners. It consists of a ferrite stick located on the centerline of a pair of identically wound solenoidal coils. In the ferrite stick are two holes through which are threaded two single-turn loops of wire, one carrying the interrogate pulse and the other the readout pulse. Coupling between the two loops depends on the magnetic state of the material around the holes, which in turn depends on the amount of dc flowing in the solenoidal coils. Thus, with no current in the control winding (on-hook or open circuit) an interrogate pulse produces a large pulse in the readout loop, whereas presence of dc in the control winding suppresses this pulse.

To conserve frame mounting space, the ferrod sensor unit contains two ferrods, one behind the other. These units are mounted on equipment frames in egg-crate apparatus mountings (see Fig. 13), each of which accommodates 128 of these dual units or 256 ferrod sensors. The mounting serves not only as a physical support but also as an array of magnetic shields to prevent interference between adjacent sensors.

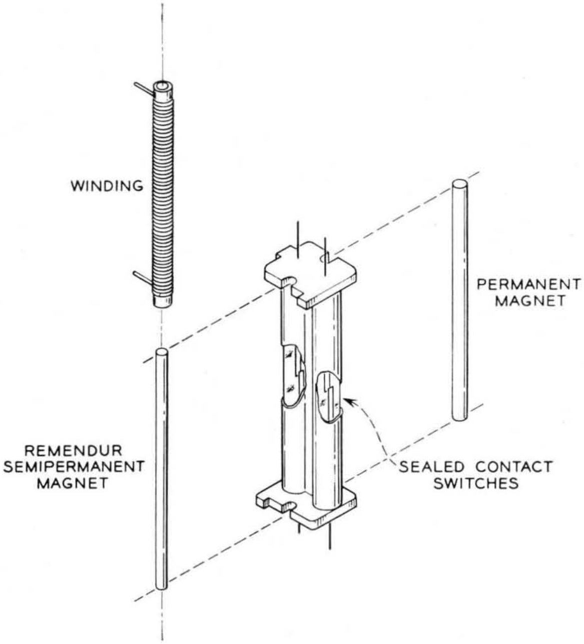

Fig. 11 — Bipolar ferreed assembly.

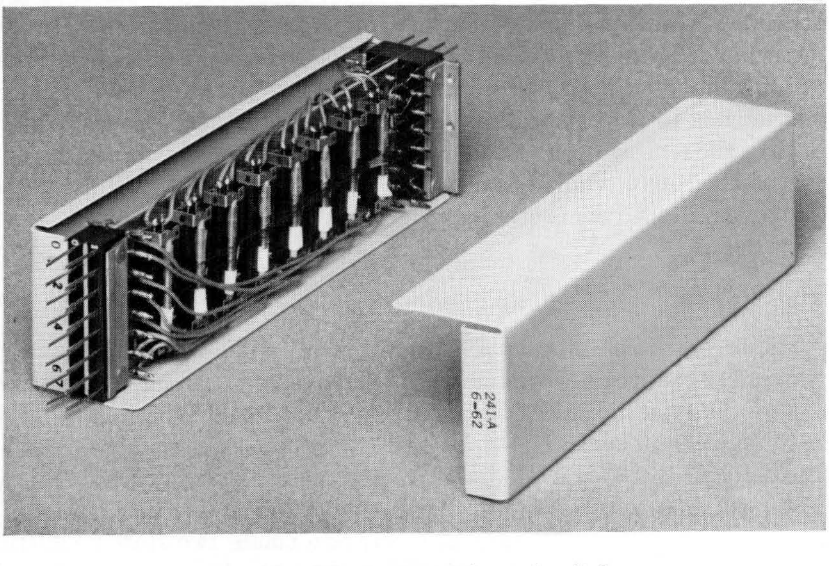

Fig. 12 — Bipolar 1 × 8 ferreed switch.

TABLE IV — SUMMARY OF FERREED SWITCH CHARACTERISTICS

	Over-All Dimensions			No. 1 ESS Network Circuit Requirements									
				Operate and Release Pulse			Characteristics						
	Height (inches)	Width (inches)	Length (inches)	Peak Amperes	25% width (microseconds)	Energy (joules)	Resistance (milliohms)	Operate chatter (milliseconds)	Breakdown (volts)	Dry operate (milliamperes)	Wet operate (milliamperes)	Expected life (operations)	Tolerable surge (amperes)
2-wire (8 × 8 type)	$6\frac{3}{4}$	$2\frac{1}{8}$	$9\frac{1}{4}$	9	200 to 500	0.2	<200	<3	>800	125	0	10^6	3.6
2-wire bipolar (1 × 8 type)	$1\frac{5}{8}$	$2\frac{1}{8}$	$9\frac{1}{4}$	6	200 to 500	0.01	<200	<3	>800	125	40	10^6	3.6

The ferrod sensor units take full advantage of the economies of molding. Both control windings are wound directly on a molded spool which supports the ferrite stick and, in the case of the more sensitive 1D and 1E sensors, the metallic magnetic return path. Two of these spool assemblies are located between two similar molded wire arrays which hold the spools in place and establish contact between the spool terminals and the molded wires, the ends of which serve as the apparatus terminals. In the 1B code, two contact protection networks are also supported between these molded wire arrays. These networks provide protection for the cutoff contacts, which are in series with the control windings and reduce interference in the connecting circuits as the cutoff contacts operate. Both of the sensors in the 1B unit are shop wired for loop start lines, but one of them can readily be converted for ground start operation by changing strapped connections on the front terminals of the unit.

5.7 *Ferrite Sheet Memory*

The 6A ferrite sheet memory is used in the call store for temporary, electrically-changeable information.[5] The memory module, shown in Fig. 14, contains 192 active ferrite sheets, plus 12 spare sheets, arranged in three columns and divided into four sections or submodules. An individual sheet, shown in the inset, is 1.04 inches square and 0.030 inch thick, with 256 holes of 0.025-inch diameter arranged in a 16 × 16 array. The material surrounding each hole acts as a small, two-state magnetic core to store one information bit. Thus the module has a capacity of

49,152 bits, which are organized by the wiring pattern into 2048 words of 24 bits each.

Four one-turn "windings" pass through each hole for X-address, Y-address, inhibit, and readout functions. The Y-address windings are formed by the conductors "printed" on the two sides of the sheets and through the holes by evaporation and plating techniques. Interconnections between adjacent sheets, and between sheets and the connectors at the sides, are by short wire jumpers soldered to the two large land areas on each sheet. The X-address, inhibit, and readout windings are made by threading fine 36-gauge wire through each column of holes. The readout windings are applied on a submodule basis so that each threaded length is the height of the submodule. Connections are made to the terminals printed on the sides of the epoxy-paper printed wire board at the top of each submodule. The X-address and inhibit windings are threaded through the entire height of the module, with X windings terminated on the connectors in the upper right corner and inhibit windings on terminals of the printed wire board at the bottom of the module.

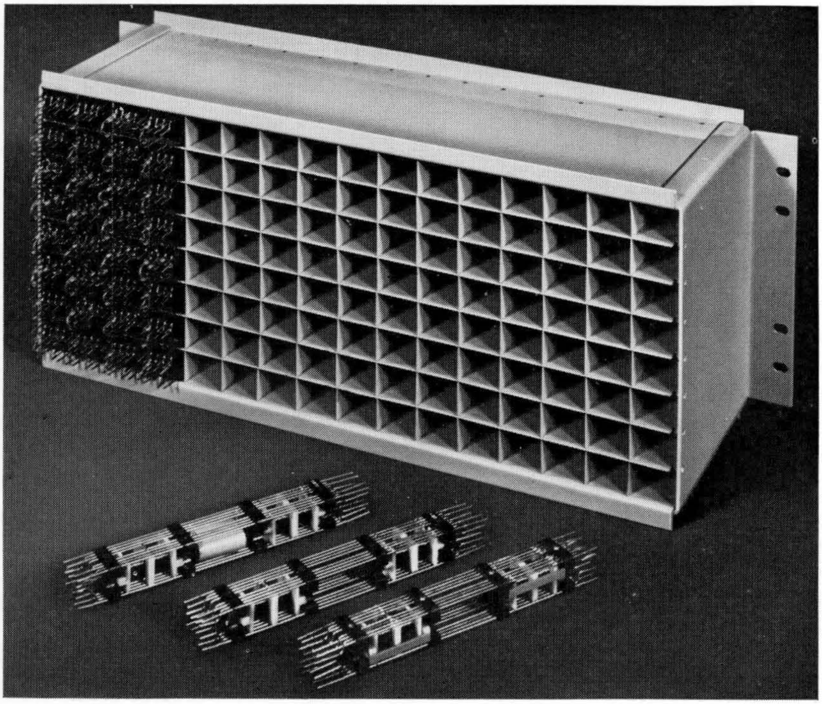

Fig. 13 — Ferrod sensors and mounting.

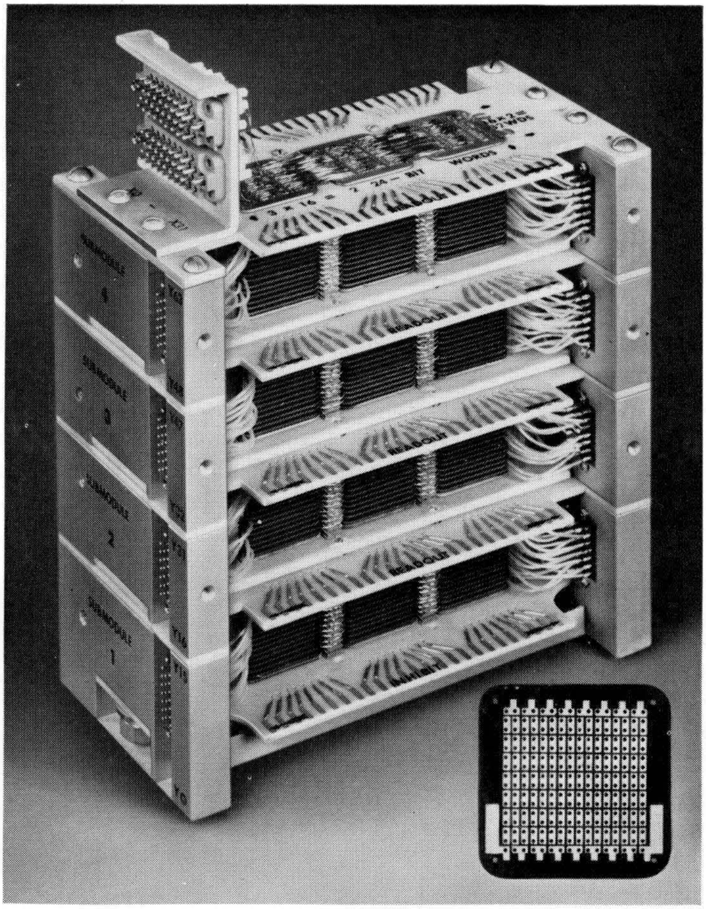

Fig. 14 — Ferrite sheet memory and sheet.

The use of pluggable connectors for all winding terminations facilitates testing and permits a compact assembly of the four modules needed for each call store by plugging the modules together with special, double-ended printed wire board connectors between. This minimizes noise pickup in the readout windings and eases field replacement.

5.8 *Twistor Memory*

The 1A twistor memory is used in the No. 1 ESS program store for bulk storage of the semipermanent program and translation information.[6,7] The memory module, shown in Fig. 15, is composed of 64 twistor planes mounted vertically in an aluminum and steel framework. Each plane is made of stable glass-bonded mica, with solenoid tapes and twistor tapes cemented to each side. Each solenoid tape carries 64 strands of flattened wire, corresponding to 64 memory words, and each wire links a magnetic access core along the rear edge of the plane. The twistor tapes contain separate twistor wires, together with return paths, for simultaneous readout of each of the 44 bits per memory word. Two such tapes, designated A and B, are used for the entire module, and each is cemented to its side of each twistor plane. The two ends of tape A are terminated on the front side of the module, on the lower halves of the terminal fields, while tape B is terminated on the upper halves. The 64 × 64 field of access cores at the rear is linked by X- and Y-select windings and a bias winding, which are terminated on the rear side on terminal fields at both ends and along the top and bottom edges of the module.

Resilient flat springs between the twistor planes maintain intimate contact between 128 twistor memory cards and the twistor tapes. The memory card (see Fig. 16) is an aluminum sheet 0.016 inch thick with 64 rows of tiny permanent magnets, each representing a bit of information

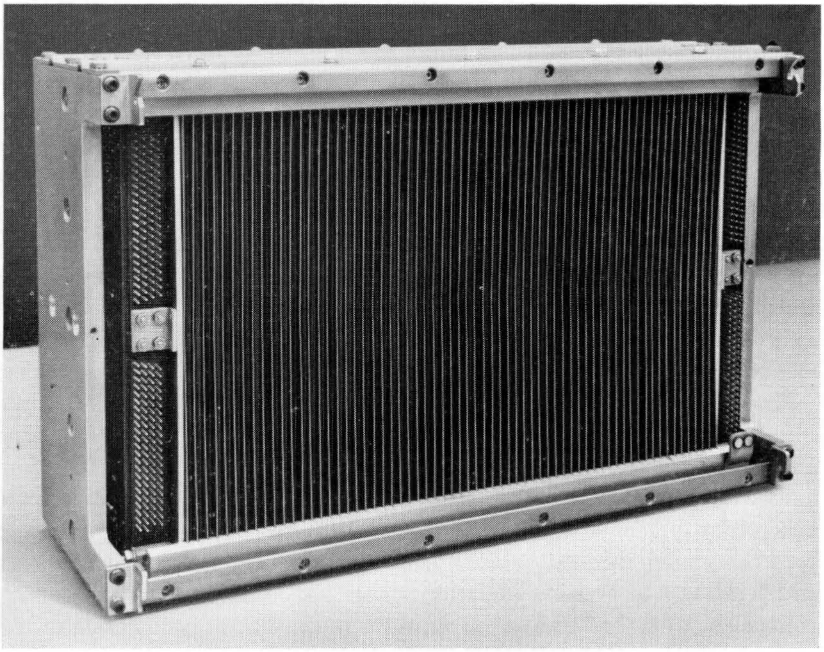

Fig. 15 — Twistor memory module.

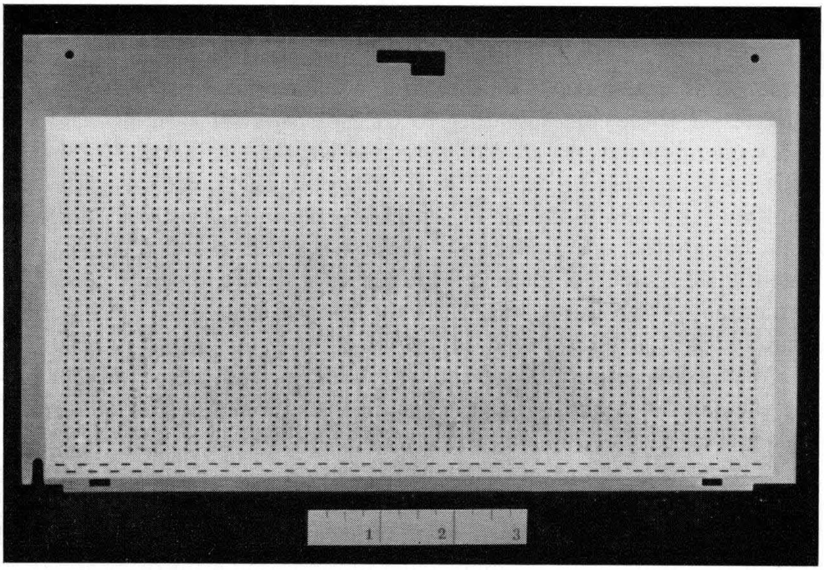

Fig. 16 — Memory card.

to be remembered. Thus the module has a capacity of 8192 words of 44 bits each, or 360,448 bits in all. A magnetized state is read as a binary "zero," while demagnetization corresponds to a "one." Two other rows of magnets along one edge are used for initializing, or controlling, the magnetic state of the twistor wires between word locations, and for sensing the word locations during the card writing process. The card is positioned vertically by a locating notch near one corner, which engages a preadjusted pin in the module. The depth of insertion is individually controlled for each card by two factory-adjusted screws. This maintains accurate registration for the bit magnets with respect to the intersections between the solenoid and twistor wires.

The memory cards are inserted into or withdrawn from the module simultaneously by the card loader. The keyhole-shaped opening near one edge of the card permits the loader to grip the card during insertion and withdrawal, while the rectangular punchings near the other edge are engaged by fingers of the card writing unit to draw the cards individually from the loader during the writing process. Other features to facilitate card loading and writing include: (a) special locating ears at the four front corners of the module for support and accurate positioning of the loader with respect to the twistor planes, (b) a connector in the lower right corner to supply 48-volt dc power to the loader, (c) tapered guiding surfaces to facilitate entry of the cards into the module, (d) accurate dimensional requirements for the alignment and spacing of the twistor planes, and (e) special requirements for card flatness and the force needed to seat the cards in the memory module.

5.9 *Relays*

For operations of relays, such as those performing supervisory functions in the trunk circuits where electronic speeds are not essential, a family of magnetically latching wire spring relays (types AL and AM) was developed. Through the use of a new magnetic structure, each of these relays operates when driven with a −48-volt pulse and remains operated. The relay is released by a controlled +24-volt pulse (sufficient to release the relay while avoiding reverse polarization and resultant reoperation).

Some semiconductor circuits have loads requiring metallic paths. The signal distributor uses a mercury relay driven by a flip-flop to operate the multicontact relays forming the trunk relay selection trees. The program store uses a circuit pack containing eight dry reed relays operated by low-level logic (LLL) circuits. The line switching frame uses two types of circuit packs containing six dry reed relays operated by a four-bit register flip-flop. In both cases these relay contacts operate wire spring relays.

5.10 *Transformers and Terminal Strips*

The 0.5-microsecond interframe bus system[8] has semiconductor drivers in the central control, with receivers in as many as 60 peripheral frames distributed along a pair extending 450 feet. The two transformer single-turn input windings have a ground shield to minimize noise coupling.

The ferrite cores are supported in a dual molded wire comb array as shown (see Fig. 4) with a wire braid shield over the input windings. An array of twelve ladders is assembled to provide for a 24-bit bus. The depth of the transformer matches the size of the semiconductor driver and receiver circuit packs with which it is used. A similar terminal strip provides for those leads which do not pass through a transformer.

5.11 *Connectors*

5.11.1 *Circuit Pack Connector*

The circuit pack connector[9] (see Fig. 17) is essentially a two-piece unit. Twenty-eight 0.036-inch diameter phosphor bronze springs are molded

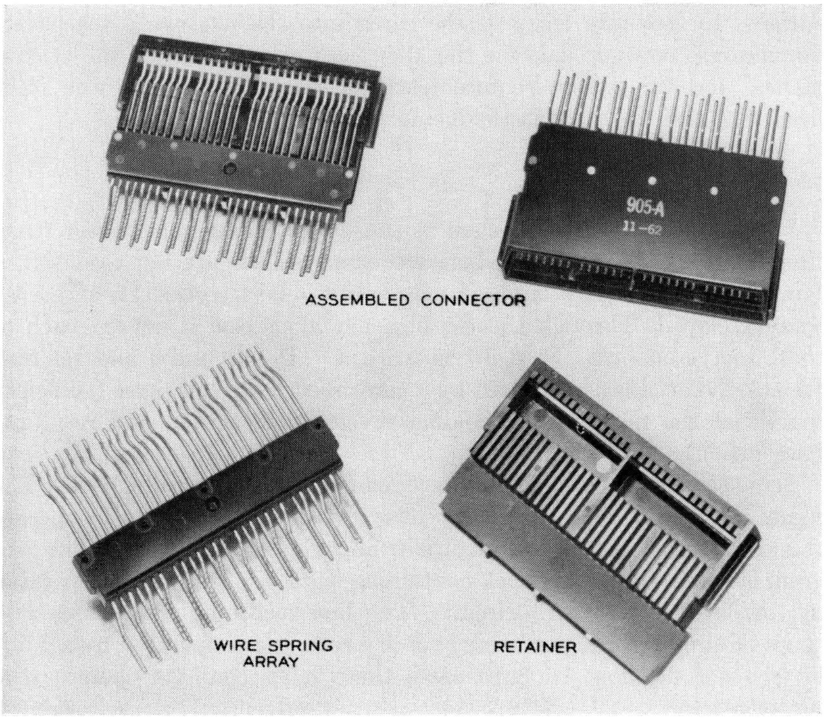

Fig. 17 — Circuit pack connector.

into a phenolic block in much the same manner as the wire spring relay. This pretensioned spring assembly is riveted to a phenolic molded retainer.

A gold overlay contact button is welded to the spring to assure a low-resistance contact. The other end of the spring is serrated for wire wrapping. The contact is designed for 500 insertions and withdrawals of circuit packs.

With the circuit pack in place, the minimum contact force will be 155 grams.

5.11.2 *Junctor Grouping Frame Connector*

The connector and mating plug of the junctor grouping frame are used to interconnect cables with 16 pairs. The contacts are formed from 0.036-inch diameter phosphor bronze wire. Two sets of sixteen contacts, each formed as spring members, are used in the connector, and two sets of flattened contacts are used in the plug. Each contact spring has a nominal force of 250 grams on the mating plug contact. All contacts are gold plated to insure a minimum life of fifty insertions.

5.12 *Distributing Frame Connecting Blocks*

Two new connecting blocks, similar to that shown in Fig. 18, have been developed for No. 1 ESS distributing frames. Both employ terminals of a new design adapted from that in 66-type connecting blocks, which are finding wide use in station systems.[10] The "quick-connect" feature speeds up the making of cross connections, because all that is necessary is to hold a plastic-insulated wire in the slot opening of the terminal clip (with about $\frac{1}{8}$ inch extending beyond) and force it into place with a hand tool. Thus, without prior preparation, a thrust of the hand causes the terminal to cut through the insulation and com-

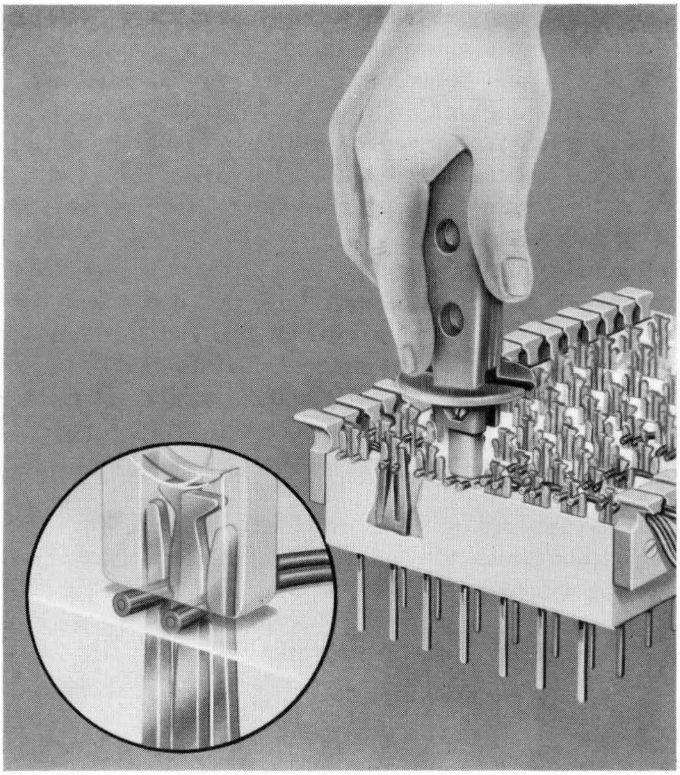

Fig. 18 — Distributing frame connecting blocks and insertion tool.

plete a good connection. A simple forked tool is used to remove a lead without disturbing wires on adjacent terminals.

Each connecting block has 64 pairs of terminals, but one has two slots per terminal to accommodate two jumper wires, while the other has only one slot. Both terminals accept two solderless wrapped connections on the rear. Both blocks are molded from white plastic. The terminals are made from 0.045 by 0.045 inch phosphor bronze.

5.13 *Protector Apparatus*

A new connector, coded 302, terminates 100 outside plant pairs on the protector frame. This new unit is responsible for a 3.3:1 reduction in frame length while providing all of the usual features for protection, isolation, and testing of lines.

The connector panel is a molded, flame-retardant, plastic unit 16.2 inches long and 4.3 inches wide with 100 jacks arranged in four rows of 25 each (see Fig. 19). Each jack has five pins: tip and ring (T&R) for outside plant, T&R for central office equipment, and a ground pin. Each individual protector unit plugs into a jack to provide standard 500-volt protection for one cable pair.

Gold-plated contacts arranged in two 50-pair groups at top and bottom give front access for attaching test-shoes for various cable tests.

A stub cable is factory-terminated on the rear of the connector, using either 24- or 22-gauge conductors.

An individual protector unit (see Fig. 19 inset) is provided for each cable pair. When fully inserted into the panel, it connects the central office equipment to outside plant through gold-plated contacts. A cable pair is disconnected by pulling a protector unit forward to a detent position, which disconnects the central office equipment without disconnecting protection on the outside pair. This feature facilitates office installation, cutover, cable testing, temporary service denials, and other services.

The 3A-type protector units have no heat coils, since No. 1 ESS is self-protecting without them. Certain circuits of other systems which are not self-protecting will require heat coils. They will use 4A-type units. No protection is required for cable systems that are not exposed to foreign potentials. Here, the dummy 5A type will be used.

VI. EQUIPMENT FRAME DESIGNS

6.1 *Network*

The No. 1 ESS network is a space-division network in which two-wire metallic connections are switched through eight stages of ferreed switches.

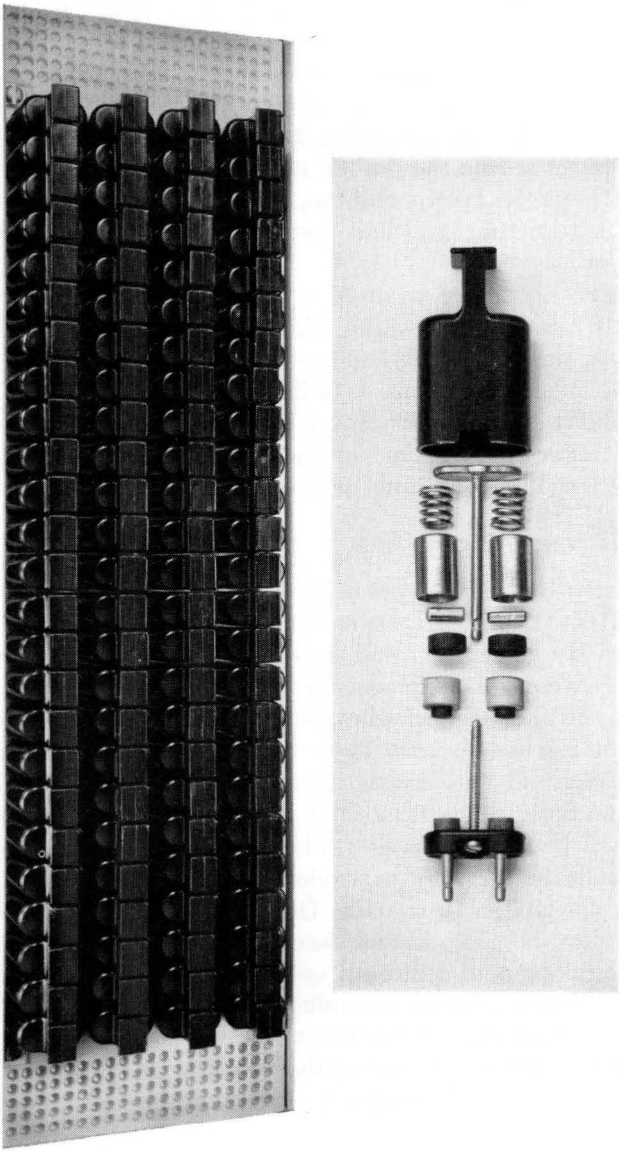

Fig. 19 — Protector and connector.

In addition to the normal interconnections of lines to lines, lines to trunks, and trunks to trunks, the network is used to interconnect lines and trunks to service circuits, such as: tone trunks, signal transmitters and receivers, coin supervisory circuits, ringing circuits, party test circuits, and maintenance circuits. To establish these interconnections, central control selects the desired network paths and, via the central pulse distributor and peripheral bus, addresses the network frames. The network in turn translates and executes these orders to establish the specified paths.

No. 1 ESS offices are arranged to work with a maximum of 16 line link and 16 trunk link networks. With 4:1 concentration, this provides network terminations for 65,536 lines and 16,384 trunks.

The line link network consists of line switching and junctor switching frames, while the trunk link network is comprised of trunk switching and junctor switching frames. Each of these frames provides for two stages of switching. The interconnection of these frames is shown in Fig. 1.

6.1.1 *Line Link Network*

There are two general types of line switching frames in this network; one provides 2:1 concentration and the other 4:1. Two frames are coded for each: one a home frame and the other its mate, which contains considerably less control equipment for line scanner and network.

In both the 2:1 and 4:1 frames, duplicated line scanner controllers are provided in the home frame. These two controllers alternate in serving a pair of home and mate frames, each one in turn controlling the scanner matrices on both frames for a fixed period of time under control of the program. If the active controller fails, the standby assumes control.

The duplicated network controllers in the 4:1 home frame serve a pair of home and mate frames. One controller normally serves the switches on the home frame and the other those on the mate frame, with either one taking over control of both frames if a failure occurs in the other. Duplicated network controllers are required on both home and mate frames, in the 2:1 frames due to the high calling rate there. Each controller normally sets up connections to only one half the switches on its frame, but either will control both halves of a frame under trouble conditions.

In addition to these control equipments, each home and mate 2:1-type line switching frame contains its half of a 1024-line ferrod sensor matrix for detecting service requests, and sixteen line concentrators with 32 lines each. Each concentrator is made up of two first-stage switches, each having four 4 × 4 crosspoint arrays, and two second-stage switches, each

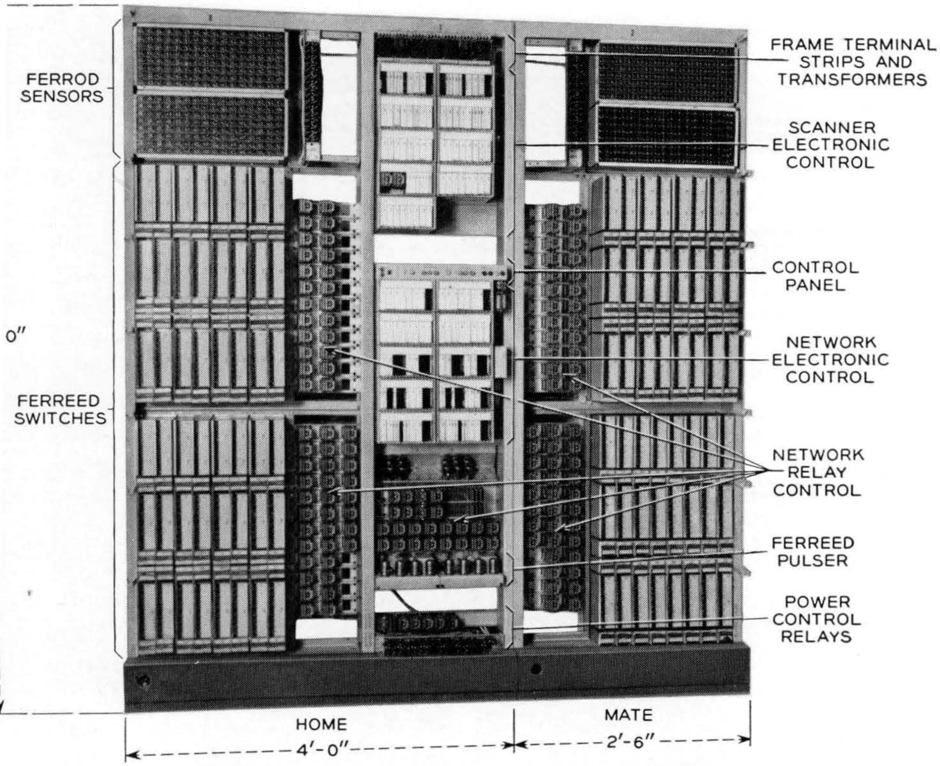

Fig. 20 — Line switching frames for 4-to-1 concentration ratio.

having two 8 × 4 arrays, which provide the 2:1 concentration. Each concentrator also has four bipolar ferreed switches, each with eight two-wire crosspoints for cutting off the ferrod sensors.

Each of the 4:1 home and mate frames contains its half of a 1024-line ferrod sensor matrix and eight line concentrators with 64 lines each, in addition to the above control equipments. Each concentrator has four first-stage 16 × 4 of 8 switches which provide 2:1 concentration and two second-stage switches, each with two 8 × 4 arrays, which provide an additional 2:1 concentration for a combined concentration of 4:1. Each concentrator also contains eight of the above bipolar switches. The four line switching frames are shown in Figs. 20 and 21.

The line junctor switching frame shown in Fig. 22 contains duplicated network control equipment and four grids, each with eight third-stage and eight fourth-stage 8 × 8 switches and eight 1 × 8 bipolar switches

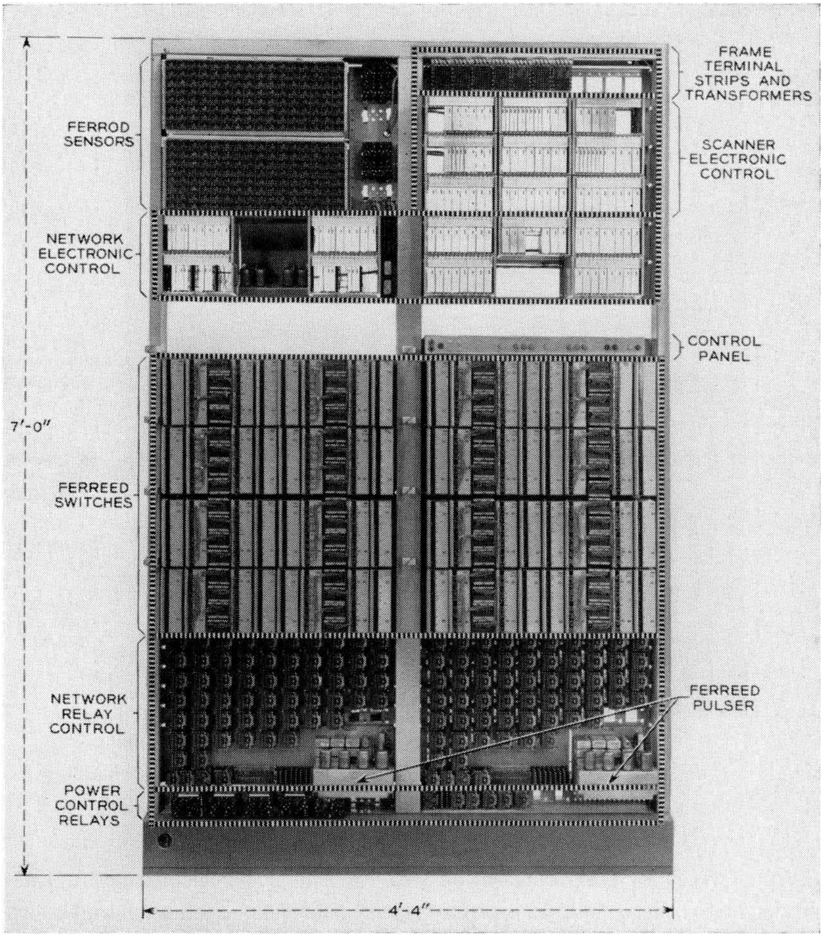

Fig. 21 — Line switching frames for 2-to-1 concentration ratio.

for test access into established connections. This frame has 256 "B" links on its third-stage and 256 junctors on its fourth-stage switches.

Each fully equipped line link network has four junctor switching frames and from four to sixteen line switching frames, counting home and mate frames as separate frames. This provides for concentrating lines ranging in number from 2048 to 8192 (in increments of 512 lines) on 1024 junctors. The 2:1 type of frame is used for concentration ratios of 2:1, $2\frac{1}{2}$:1, 3:1 and $3\frac{1}{2}$:1 and the 4:1 type for ratios of 4:1, 5:1, 6:1, 7:1, and 8:1.

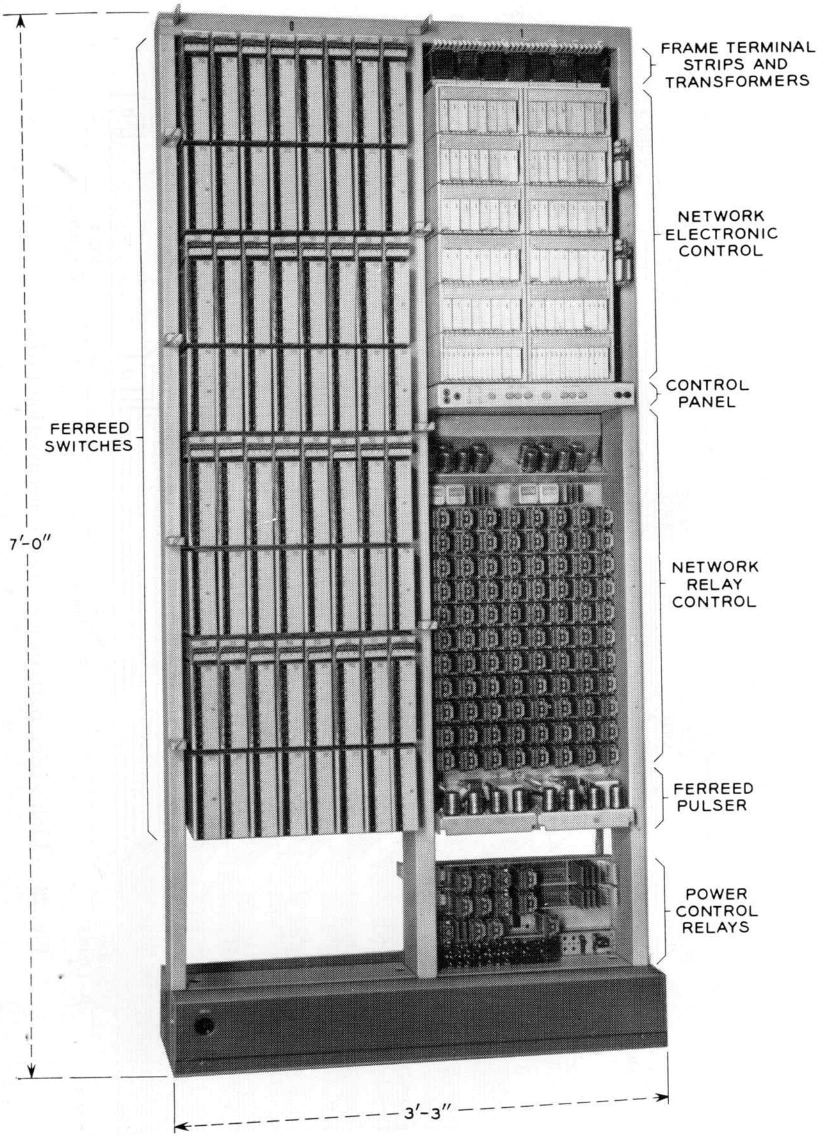

Fig. 22 — Line or trunk junctor switching frame.

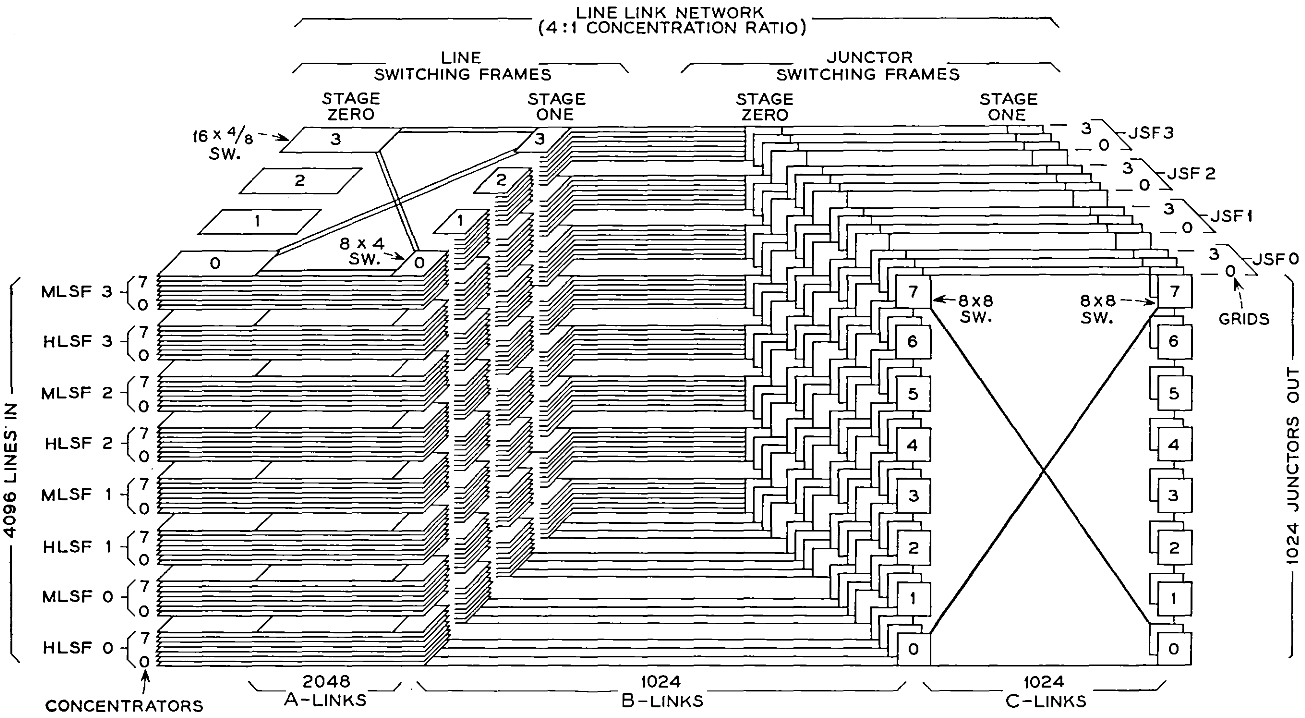

Fig. 23 — Link wiring pattern for 4-to-1 concentration ratio.

All lines on a line link network have access to all junctors via the A, B, and C links, which are spread between the first and second, second and third, and third and fourth stage switches, respectively. The wiring pattern for these links for the 4:1 concentration ratio is shown in Fig. 23.

Since all networks have a maximum of 1024 B links, regardless of their size, all networks other than the 2048-line 2:1 type and the 4096-line 4:1 type require the multipling of B links. Patterns have been established for these multiples to minimize blocking.

All network frames are shop-wired in the conventional manner, using unit surface wiring and frame local cables. However, since these frames are pulse operated, extreme care had to be exercised in the location of apparatus to minimize lead length and in the separation of leads into several local forms to minimize interference.

6.1.2 *Trunk Link Network*

The trunk link network has four junctor switching frames (the same as those in the line link network) and from four to eight trunk switching frames, which are the same as the junctor switching frames except for the omission of the bipolar ferreed switches. (See Fig. 24.)

The trunk switching frame has a capacity of 256 trunks on its first-stage and 256 B links on its second-stage switches.

Trunks ranging in number from 1024 to 2048 in 256 trunk increments are concentrated on 1024 junctors to give trunk concentrations of 1:1, $1\frac{1}{4}$:1, $1\frac{1}{2}$:1, $1\frac{3}{4}$:1, or 2:1. All trunks have access to all junctors, so B links must be multipled for all networks other than the 1024-trunk, 1:1 ratio size in accordance with patterns which minimize blocking.

6.2 *Trunk and Junctor Frames*

6.2.1 *Trunk Frames*

There are two types of trunk frames, the universal trunk frame (see Fig. 25) and the miscellaneous trunk frame. The universal trunk frame consists of a basic 4-foot, 4-inch double-bay frame and a supplementary 2-foot, 2-inch single-bay frame, each of which accommodates 64 plug-in trunk units. The miscellaneous trunk frame is a single-bay 2-foot, 2-inch frame used for mounting the conventional type of wired-in trunk circuits that come on 2-inch and 4-inch mounting plates.

The universal trunk frames, as their name implies, are universally wired so that any plug-in trunk unit may be plugged into any trunk position; each unit may have one circuit or two circuits. The supple-

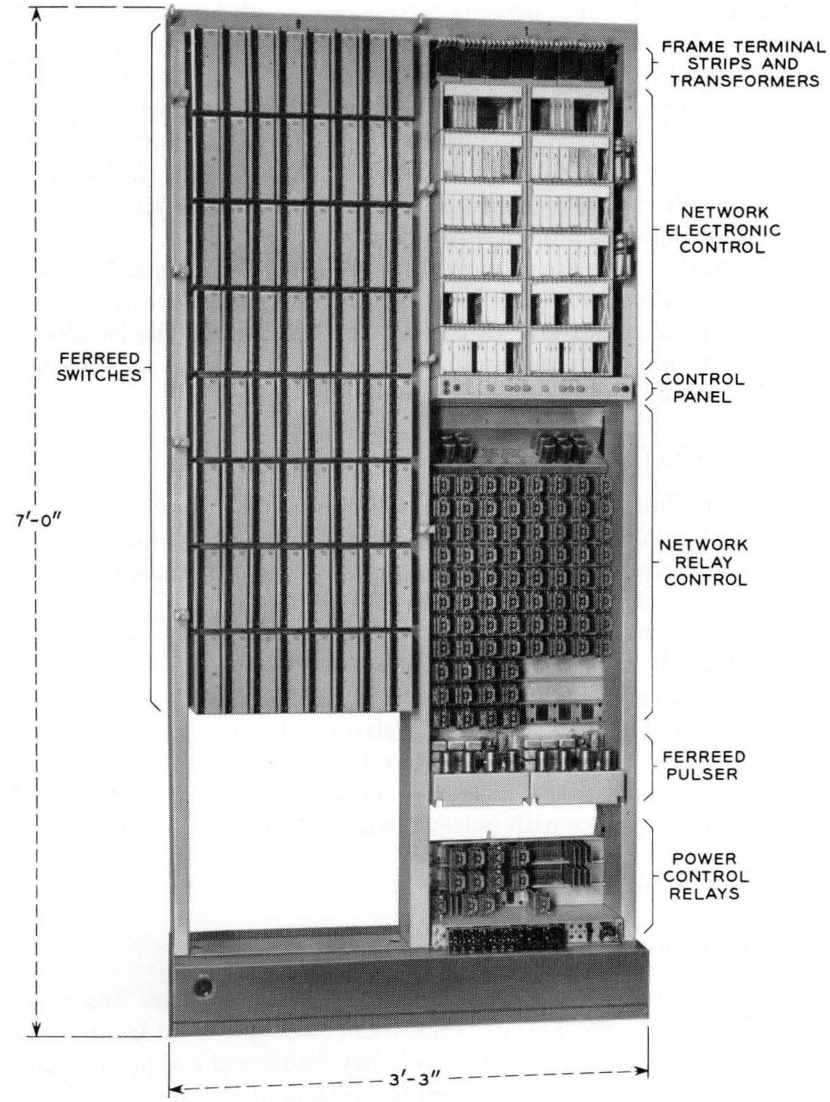

Fig. 24 — Trunk switching frame.

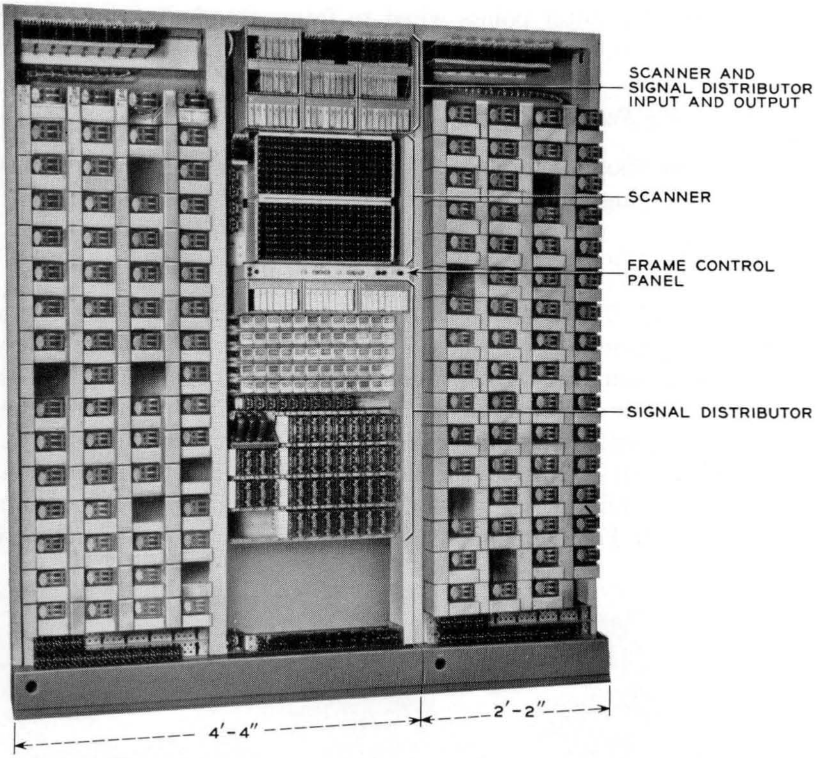

Fig. 25 — Universal trunk frame (or junctor frame).

mentary frame is located to the right of the basic frame so that the control bay, containing the signal distributor and scanner control, falls between the two trunk bays it serves. To save on control equipment, the universal trunk frames work on a home and mate frame basis. The home frame has a 1024-point scanner control unit which operates one half of a 1024-point scanner matrix on each of the home and mate frames. The scanner and signal distributor control equipments are duplicated for reliability.

The miscellaneous trunk frames contain such a variety of trunk and service circuits that it is uneconomical to provide them with universal scanners and signal distributors to satisfy all conditions. Instead, the scanning function for these trunks is performed by the master scanner, and the signal-distributing function is performed by the signal distributors on nearby universal trunk and junctor frames, each of which has 256 of its signal distributor points wired to frame terminal strips for this purpose.

6.2.2 *Junctor Frame*

The junctor frame is similar to the universal trunk frame except that it is wired for plug-in junctors instead of trunks.

6.2.3 *Trunk and Junctor Units*

6.2.3.1 *Plug-in Trunks and Junctors.* Since most trunk and junctor functions are performed by common control equipment such as central control scanners and signal distributors, the size and complexity of these trunk and junctor circuits is greatly reduced. Most high-runner incoming and outgoing trunks are simple circuits containing two or three relays.

This reduction permitted the development of the family of small plug-in trunk and junctor units. The simple angle-type sheet metal chassis shown in Fig. 26 mounts the transmission components, magnetic

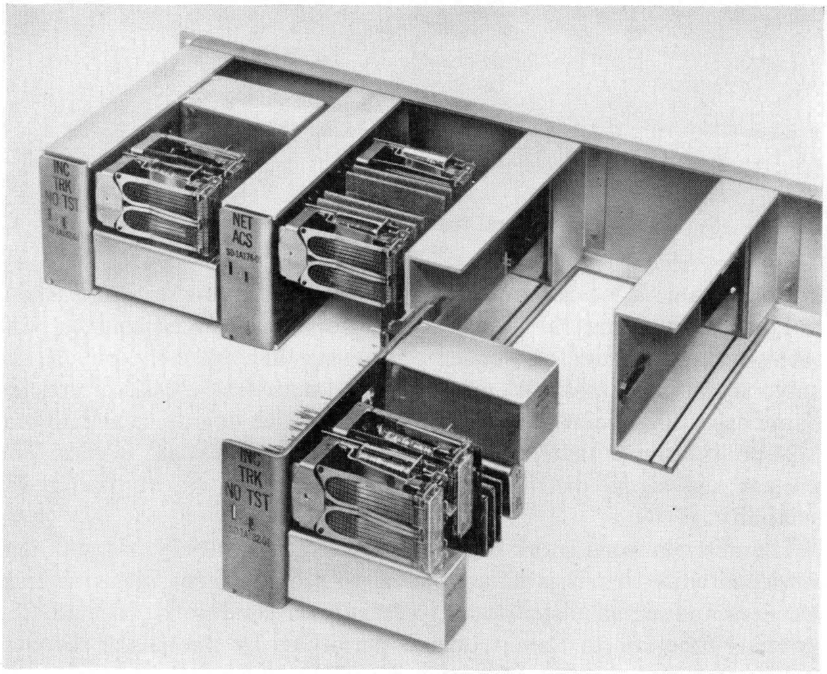

Fig. 26 — Plug-in trunk units.

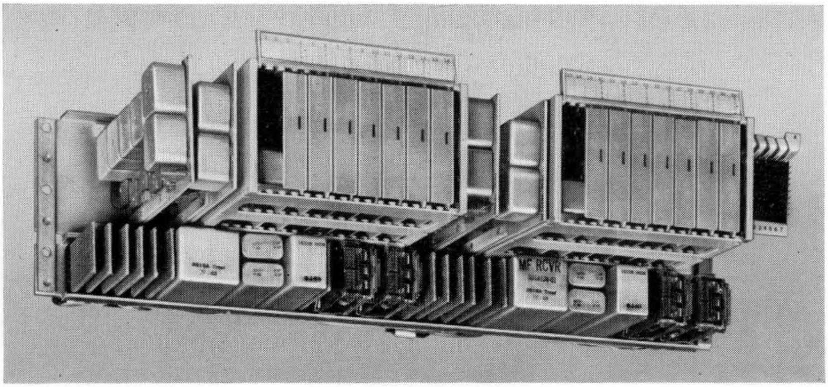

Fig. 27 — MF receiver unit.

latching relays, and a printed board connector. All units are surface wired using wire wrapped connections. Each plug-in chassis can be used for one or two (identical) trunk circuits, and all have a preassigned terminal pattern to insure compatibility with the universal frame wiring. In a typical office, all junctor circuits and 78 per cent of all trunk circuits will be of this type.

6.2.3.2 *Wired-in Trunk and Service Units.* The transmitters, receivers, trunks, and service circuits which do not fit the universal pattern have their combinations of semiconductor circuit packs, networks and relays wired in the conventional manner on mounting plates. Typical is the MF receiver shown in Fig. 27. These surface wired units will be located on the miscellaneous trunk frame and cabled via unit terminal strips to their associated master scanner, trunk signal distributor control points and distributing frame terminations.

6.3 *Central Control*

The central control,[11] shown in Fig. 28, comprises the logic portion of the system central processor. It contains approximately 2300 circuit packs, the majority of which are LLL (low-level logic). This basic logic circuit, a diode-transistor AND-NOT gate, is used to generate all logic functions and memory cells or flip-flops.

The advent of nanosecond logic circuits has necessitated much closer design cooperation between the circuit and equipment designers than was the case in relay switching systems. Wiring patterns and rules had to be developed to insure satisfactory switching speeds, circuit crosstalk

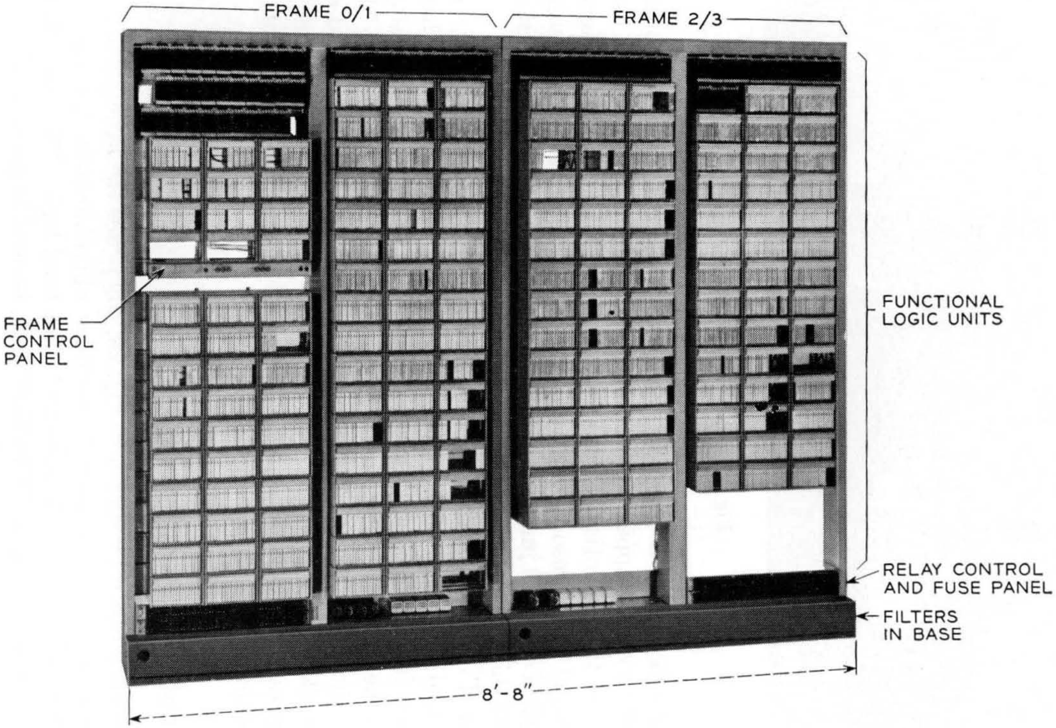

Fig. 28 — Central control.

protection, and a consistent manufactured product. Such requirements have dictated the dense packing of components shown.

The functions of the four bays of equipment can be subdivided under three major headings: input-output, data processing, and control and system maintenance facilities.

The input-output equipment comprises approximately 26 percent of the equipped volume of central control. The transformers, inductors, terminal strips, cable receivers, drivers, and logic are located near the top of each of the four bays: those for the program store and call store address and answer bus in bays 0 and 1, peripheral unit scanner answer and verify bus in bay 1, central control match bus in bay 2, and bus selection for peripheral unit addressing and central control matching in bay 3.

The data-processing function represents 47 percent of the central control volume and is distributed over all four bays. The 23-bit masked and unmasked bus systems used for data handling within the central control required an unconventional circuit pack organization. To provide uniform operation for all bits of a word and to meet timing requirements, no bus bit lead could exceed 6 feet in length. Apparatus for the various registers is distributed over several mounting plates. A particular register function is distributed over several mounting plates, each bit occupying only a few circuit packs on each plate. This permits the output gates of eight different registers associated with the same bus bit to be assigned to the same circuit pack, thus minimizing bus lead length and simplifying flip-flop control leads and maintenance diagnosis.

Aside from power filters, fuse panels, power control, and manual control panel, the remainder of the central control (approximately 20 per cent) is for maintenance facilities. The match bus and buffer register bus are organized in the same manner as the masked and unmasked bus systems. The emergency alarm and maintenance decoder are centralized functions providing a means for detecting, isolating, and performing maintenance checks of a malfunctioning central control. This equipment is located in bays 2 and 3 with portions extending into other functional units of the frame.

6.4 *Program Store*

The program store is the large, semipermanent memory for program and translation storage. It has a capacity of 131,072 words of 44 bits each, or 5.8×10^6 bits in all. The store, shown in Fig. 29, consists of three frames. Two double-bay frames contain the twistor memory modules, access circuits, and other related circuits, while the single-bay frame at

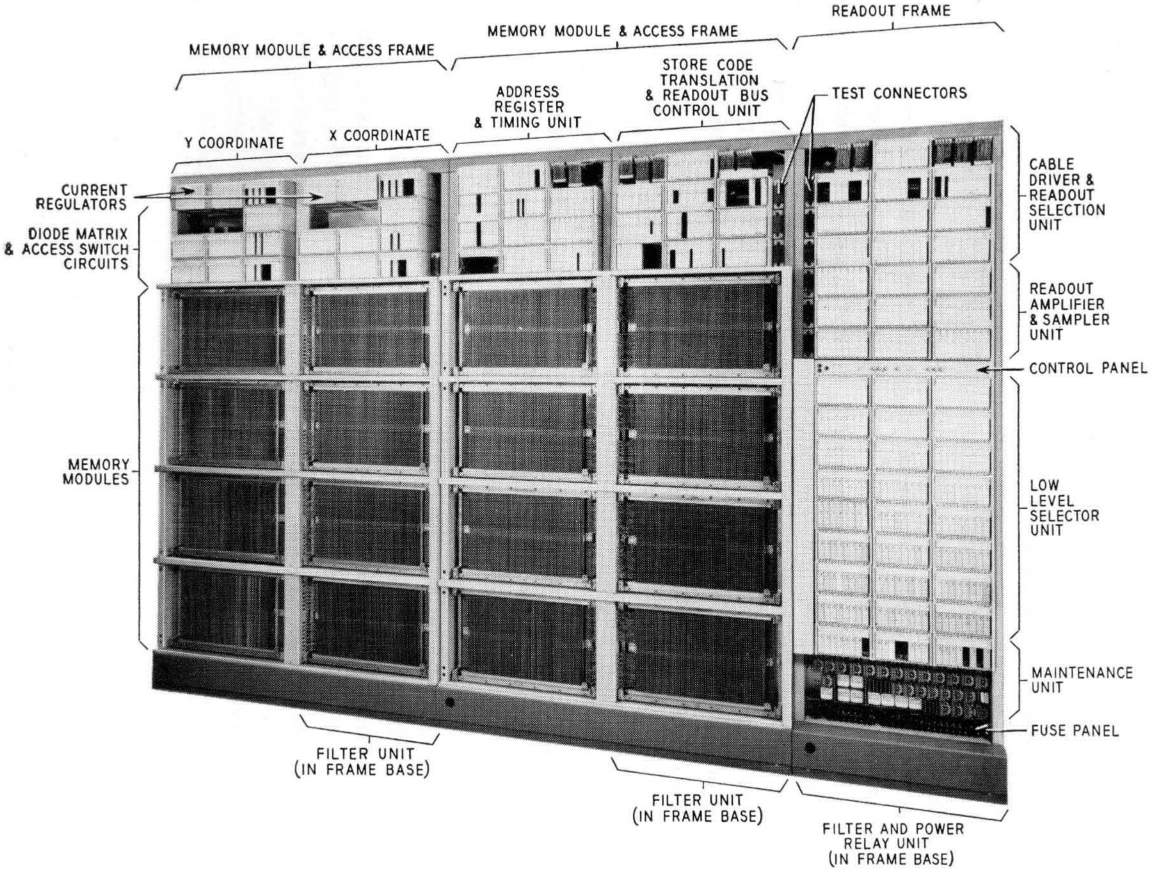

Fig. 29 — Program store.

the right contains circuits associated primarily with readout. Due to the high density of the memory modules, their frames are the heaviest in No. 1 ESS, with a weight of approximately 1900 pounds each.

The memory modules are arranged in a square 4 × 4 array to permit the 256 × 256 coordinate access wiring to be made on the rear with simple, short jumpers between modules.[6] Readout connections between modules, though not quite as simple, are also relatively short with this arrangement.

The input address is received by centrally located transformers at the top of the middle frame. Here it is efficiently channeled to register and access circuits to the left, and also to selectors in the readout circuits to the right, where selection is made as to which readout group and tape (A or B) should be read. Similarly, the timing unit is centrally located to synchronize operation of the access circuits to the left with strobe pulses for the readout circuits to the right. The diode matrix and access switch circuits are above the memory modules where they connect conveniently with the modules by means of a Y-access cable which runs vertically down the left side of the store and an X-access cable which runs horizontally just above the module array.

Readout connections are made on the front side of the store with cable running vertically in shielded ducts between the columns of modules and horizontally in ducts between the first and second and between the third and fourth rows of modules. These cables are further protected from noise pickups by use of close-twisted pairs and by limiting to two inches the unshielded length of leads which connect to the twistor tapes.

The X and Y readout multiples continue in shielded enclosures to terminals of the low-level selector circuit packs at the right. The selected outputs are then channeled to the samplers, amplifiers, and cable drivers above, and to the readout terminals at the top of the frame. This arrangement achieves shortest wiring runs and maximum separation between the sensitive readout circuits and the high-energy drive pulses of the access circuits.

Current regulators for both access and bias are located at the top of the first frame with the diode matrix and access switch circuits. This is important because tracking circuits on these units must maintain a fixed 2:1 relationship between currents for bias and for access drive. Also, this position at the top of the frame, with clearance above and below, provides for adequate heat dissipation.

Most circuit components for the program store are mounted on circuit packs, but the current regulators are packaged in a manner similar to the No. 1 ESS universal trunk circuits, as shown in Fig. 30. The unit contains

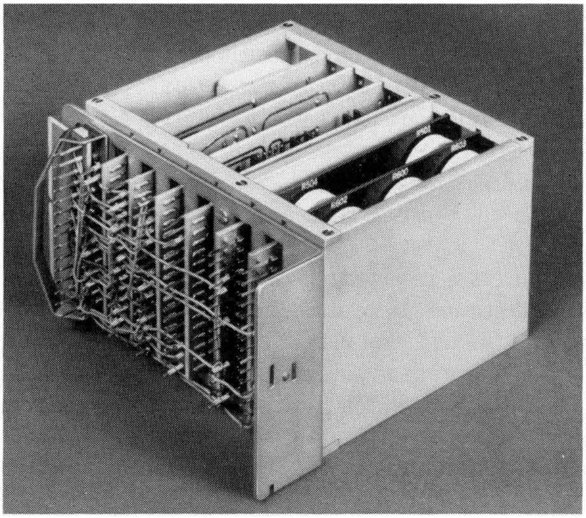

Fig. 30 — Current regulator for program store.

preadjusted potentiometers which compensate for variations in two reference resistors, zener voltage level, and the characteristics of the difference amplifier. Hence, replacement must be as a combination and not as separate packs.

Memory modules are mounted on the frame with three-point suspension to avoid distortion as a result of warping or twisting of the frame during shipping and installation.

Sliding covers are provided in front of the memory modules to protect memory cards from accidental damage. Each cover over a module containing program information is locked in place with a screw as a guard against accidentally disturbing the office program during translation changes.

6.5 *Call Store*

The call store, shown in Fig. 31, is the temporary, electrically changeable memory for telephone calls in process and for storing recent translation changes. It has a capacity of 8192 words of 24 bits each, or 196,608 bits in all.

Special emphasis was placed on short, direct connections between the ferrite sheet memory modules and their associated access and readout circuits.[5] The memory unit, containing four memory modules, is located behind the vertical panel below the center of the store, with Y-access circuits located immediately on the right and X-access circuits on the left.

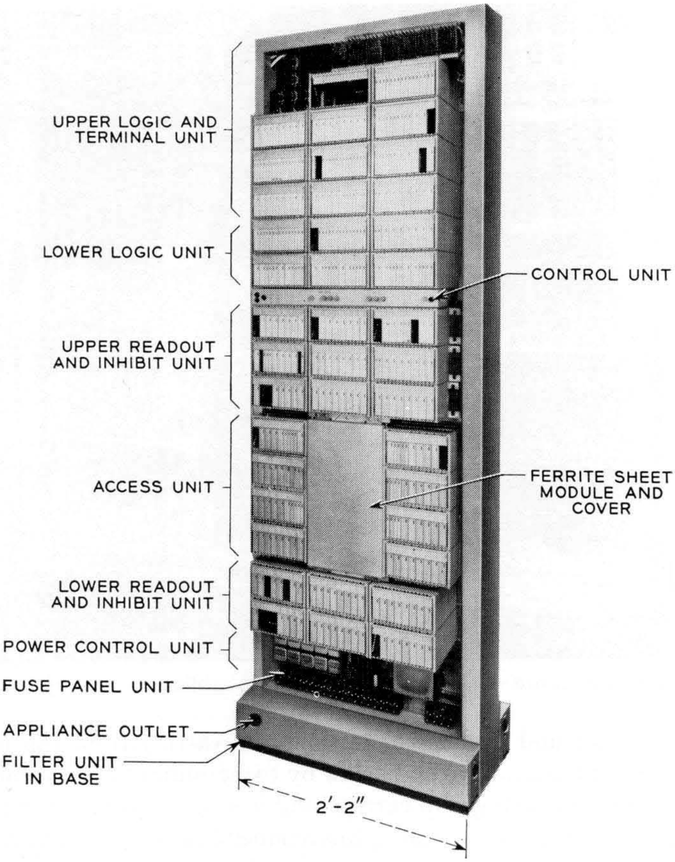

Fig. 31 — Call store frame.

Readout and inhibit circuits are divided, with some circuits above and some below the memory unit.

How direct the connections are is shown in a rear view, Fig. 32. At the right, each of four modules is connected with two cables only a few inches long to carry the X addresses from the diode matrix circuit packs to X connectors on the modules. Similar cables carry the Y addresses from circuit packs at the left to Y connectors on the various submodules of two memory modules, while other cables carry the Y addresses between modules in a slip pattern. To avoid congestion, yet facilitate handling, the access 18-conductor cables use stranded 28-gauge Teflon-insulated wire. A single shield over each cable minimizes interference with the sensitive readout circuits and also provides a common ground.

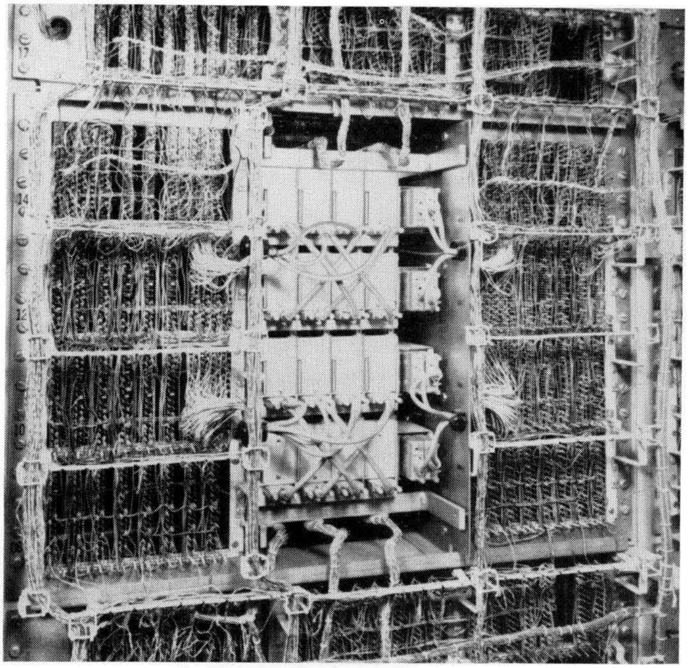

Fig. 32 — Call store — closeup of rear showing cabling of memory modules.

The readout and inhibit connections are carried from the memory unit to circuit packs above and below by two groups of three cables each. The left cable in each group carries inhibit signals, while the remaining cables are for readout. As shown, interconnections between circuit packs are made with a combination of surface wiring and loose wiring similar to that used in central control. Power distribution is by frame local cable.

The four memory modules are plugged together by double-sided connectors, which connect terminals on the edges of five printed circuit boards in each module with corresponding terminals on the edges of five boards in each adjacent module. Four of these boards carry readout connections with 50 connector terminals at each edge, while the fifth board carries a similar number of inhibit connections. Other connectors at the top of the upper module and bottom of the lower module connect with the readout and inhibit cables visible in the figure.

After plugging together, the modules are mounted in a framework which supports four apparatus mountings for circuit packs on each side. The five connectors at top and bottom which mate with this assembly are mounted in a floating manner on hinged brackets which may be

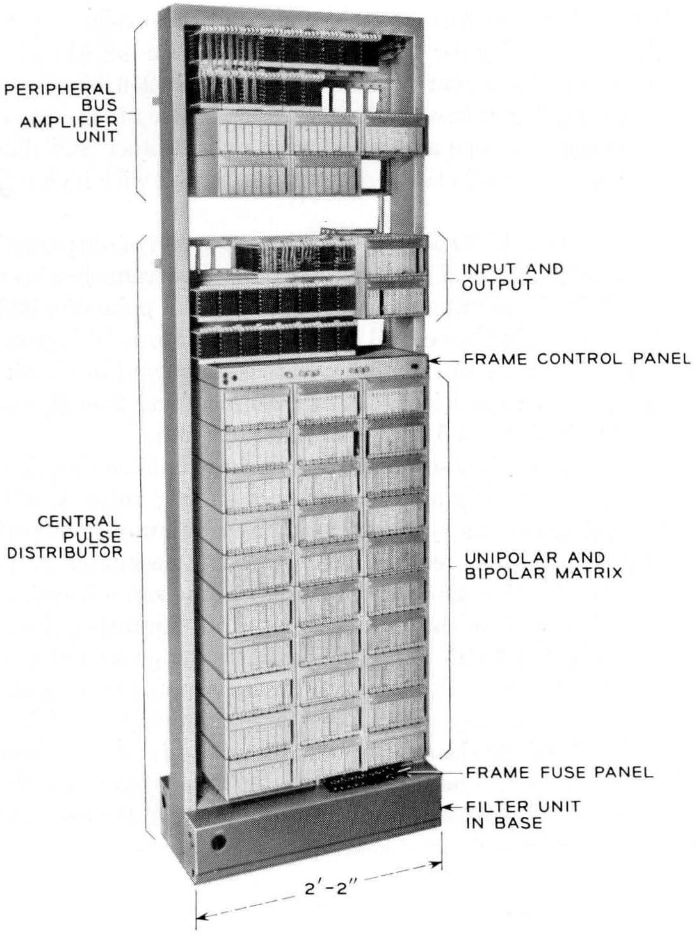

Fig. 33 — Central pulse distributor.

opened or closed from the front. This not only eases assembly and avoids alignment problems but also provides some mechanical advantage to assemble simultaneously five connectors of 50 contacts each.

6.6 *Central Pulse Distributor*

The central pulse distributor (CPD), shown in Fig. 33, is an electronic coincident-voltage transformer output selection matrix designed primarily to enable one of various peripheral units served by a common peripheral bus to accept information transmitted over this bus.

Five hundred and twelve outputs of the matrix are designed to produce pulses of single polarity for the enable function. An additional 512 addressable points of the matrix are combined into 256 bipolar outputs capable of generating pulses of either polarity. These are used to operate remotely located flip-flops associated with maintenance and diagnostic functions as well as certain trunk and service circuits with high repetition rates.

In some offices the CPD loads require a proportion of outputs differing from the 512 unipolar and 256 bipolar outputs. The frame has been wired to permit a limited amount of trading of 64 unipolar points for 32 bipolar points or vice versa in the central portion of the frame. This permits the CPD, through insertion of the appropriate complement of circuit packs, to have a range of capacities from 512 unipolar and 256 bipolar pulse outputs to 0 unipolar and 512 bipolar pulse outputs.

In the application of these frames to a variety of office sizes, it became apparent that an amplifying and load-distributing point would be required for peripheral bus systems having a large number of peripheral units. Since, for electrical reasons, the peripheral bus enable leads which originate in the CPD must be approximately the same length as their associated peripheral bus leads, the peripheral bus fan-out equipment was also mounted in the CPD frame. With this arrangement the bus and enable leads originate on the same frame. By running these leads along the same cable rack, they will be kept approximately equal in length. The amplifier circuit packs are provided in this universally wired frame unit whenever the office has from two to four bus systems, each with a maximum of 50 loads or 450 feet of bus cable between the central control and its most remote peripheral load.

6.7 *Master Scanner*

The master scanner is used to monitor various administrative and diagnostic points throughout the system. This scanner, like others on the line switching, junctor, and universal trunk frames, consists of a 1024-point ferrod sensor matrix and duplicated control equipments. These alternate on a periodic basis in controlling the interrogate and readout pulses of the matrix.

The matrix is divided into 64 groups, each consisting of 16 scan points which are scanned simultaneously. These groups are divided into two general categories, one containing supervisory scan points which are scanned every 100 milliseconds and the other containing directed scan points which are scanned as required by direction of a noncyclic program.

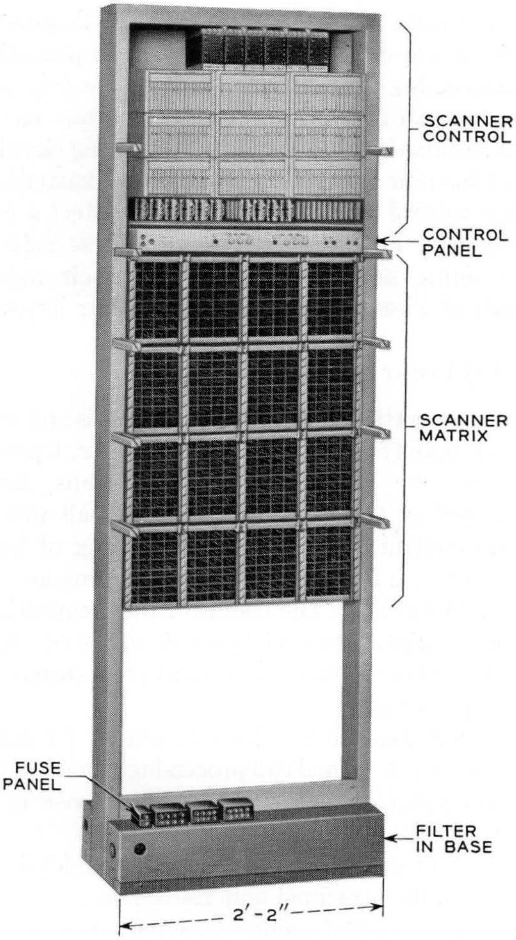

Fig. 34 — Master scanner.

With the exception of certain fixed points, which are the same for all offices and always appear in the same matrix location on the first master scanner, scan points are assigned as required on an office basis. Supervisory scan points are assigned in rows, starting at the bottom of the matrix, and directed points are assigned from the top down.

The master scanner, shown in Fig. 34, is a 2-foot, 2-inch single-bay frame. The electronic control equipment is located in the upper part of the frame to keep the address bus leads as short as possible, and the 1024-point matrix, equipped with 512 type 1E (sensitive) ferrod sensors (two sensors each), is located directly beneath this equipment to minimize the length of the interrogate and readout pulse leads. To provide for detecting either (a) a contact closure or (b) a change in potential at the scan points of the connecting circuits, both ends of the two control coils on each sensor are brought out to terminals on its front face. For contact closure, all four terminals are cabled to a connecting circuit that is to be scanned. Two of the four connecting leads furnish battery and ground to the ferrod sensor control windings so they may detect a contact closure over the second pair. For potential change, these coils are strapped together, series-aiding, and are cabled to the circuit under surveillance with a single pair of wires to detect a change across its scanned points.

6.8 *Master Control Center*

Reliable system operation and the rapid diagnosis and repair of system malfunctions rely heavily on maintenance programs. Upon detection of a malfunction, either by circuit or program means, fault-recognition programs are called in to recover the system's call processing ability. These programs control any necessary switching of subsystems and request, via memory, an appropriate diagnostic program to localize the fault to a particular package. The results of the diagnostic programs are printed out via a maintenance teletypewriter. Using the maintenance dictionary, these results can be translated to the location of the fault by the maintenance personnel.

Routine test programs are provided to search for faults which are likely to go undetected in normal call processing. These test programs can be initiated either automatically on a scheduled basis or via a manual teletypewriter request.

The master control center includes the communication facilities between the maintenance personnel and the system. Most of these communications will occur via the maintenance teletypewriter.

The master control center consists of the three frames shown in Fig. 35. The two-bay frame at the left contains the maintenance teletypewriter and two magnetic tape recorders for automatic message accounting. The third and fourth bays from the left contain the system control, display, and trunk and line test facilities. The memory card writer occupies the single-bay frame at the right.

6.8.1 *AMA and TTY Frame*

The magnetic tape recorders shown in Fig. 36, used for AMA (automatic message accounting), are provided on an active and standby basis to insure a continuous capability. In contrast to other systems, these tape

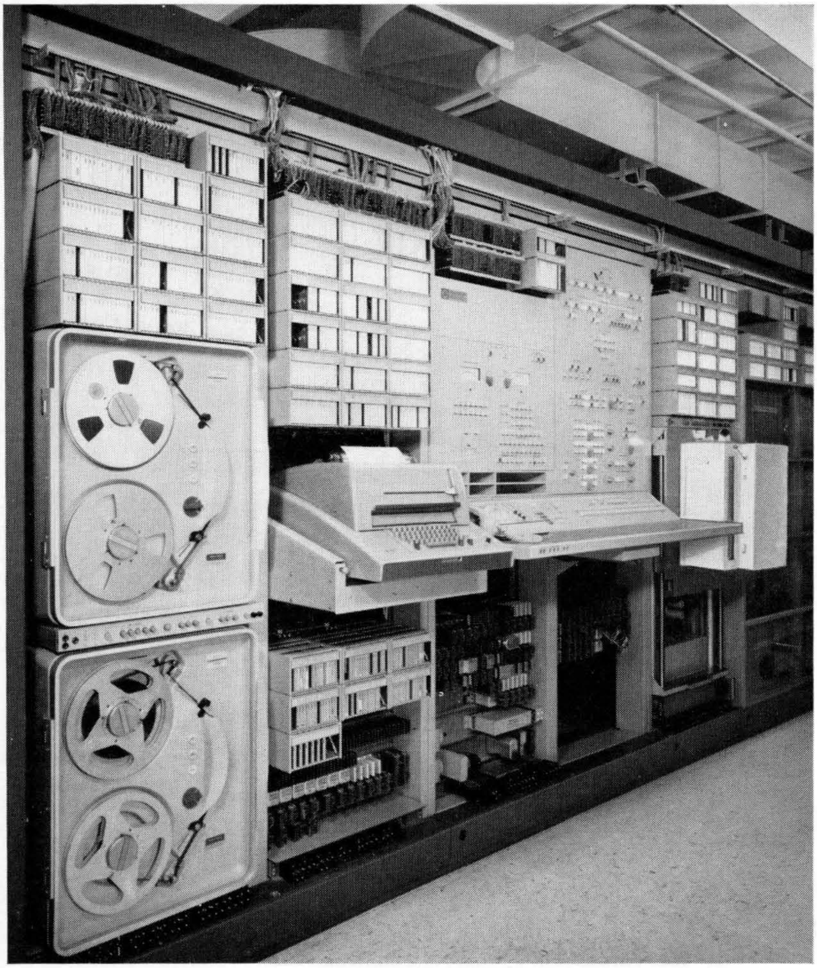

Fig. 35 — Master control center.

records are in the form of completely assembled call data, blocks of which are transferred from the system memory on a start-stop basis. The recorders are driven by three-phase, 208-volt, 60-cps motors supplied from the protected ac power plant to further insure continuity of recording.

The 35-type (keyboard send-receive page printing) teletypewriter is mounted on a retractible shelf to provide improved maintenance access while minimizing its projection into the maintenance aisle. A second

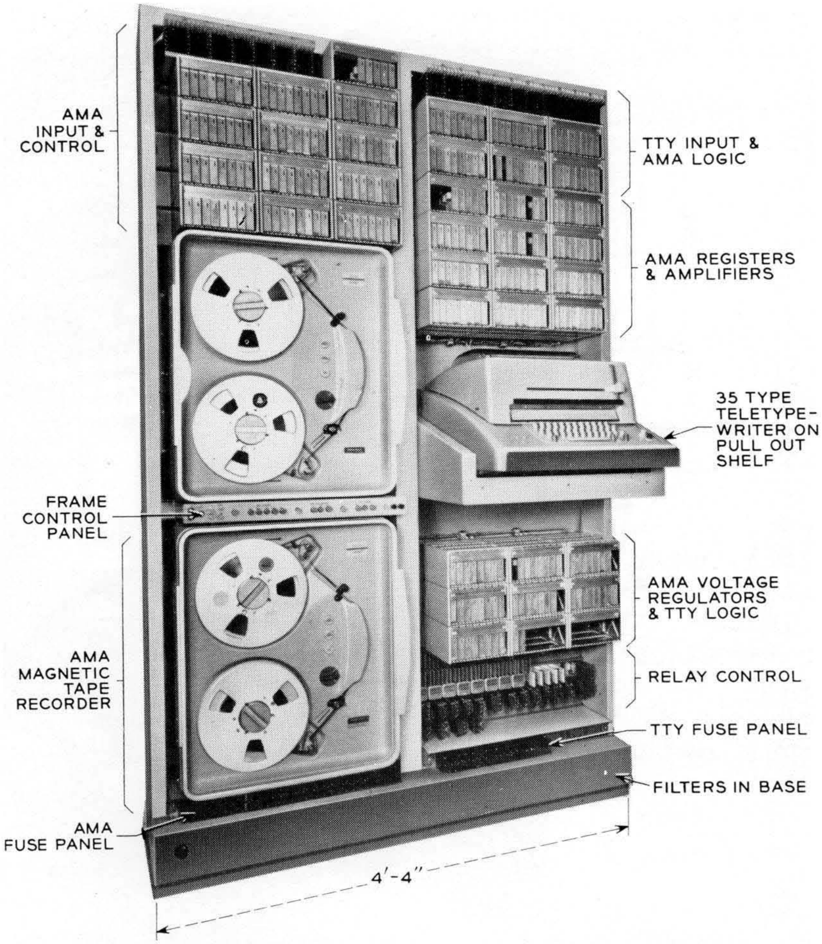

Fig. 36 — Automatic message accounting — teletypewriter frame.

maintenance teletypewriter, pedestal mounted, is installed in the office, when fully attended, or at a remote maintenance center when desired. This machine duplicates the access to the system provided by the unit in the AMA-teletypewriter frame.

6.8.2 *Control, Display and Test Frame*

The control, display, and test frame, located adjacent to the maintenance teletypewriter, provides a system monitoring, manual control, and test center. This equipment permits the maintenance man to observe the current in-and-out-of-service status of various units, to assert manual control over the system, and to make a variety of line and trunk tests.

The left half of the keyshelf and control panel, shown in Fig. 37, contains a 23B transmission measuring set, a voltmeter, a clock, a telephone set (6-button 560-type or an 18-button 623-type), a number of lamps and pushbutton keys and a TOUCH-TONE dial. This equipment provides for trunk and line testing.

The right half contains lamps, pushbutton keys, and rotary switches. The upper one-third of the panel contains the system alarm lamps and a system block diagram lamp display. An individual display is provided for each central control and program store frame. Two lamps are provided for each other class of unit such as call store, line switching frame, etc. The rest of the panel is arranged in three operating areas.

The status lamps monitor the data routing flip-flops in the central control, program stores, and call stores, and indicate certain troubles such as peripheral control failure, system time-outs, etc. Keys are provided for instituting traffic control, retiring system alarms, and removing power from the frame.

The emergency action area provides manual controls for overriding the system when the system is unable to restore itself to normal operation or when maintenance activity or additions to the office require. The program interrupt control and data word controls permit manual interruption of the program, display of a 24-bit data word, and insertion of a data word into the system.

6.8.3 *Memory Card Writer*

The memory card writer is used for writing, or changing, the information stored on the memory cards of the program stores.[6] Normally, only translation information is changed, but special facilities not generally available in a telephone office permit the writer to be used for program changes as well. The memory card writer, shown in Fig. 38, consists of a single-bay frame 2 feet, 2 inches wide. Like the program store, the card writer requires a maintenance aisle at least four feet wide to permit safe handling of the card loader.

The memory card writer contains the 1A card writing unit and associated 1A card writing head as mechanisms which physically handle the cards and magnetize, or demagnetize, as required, each of the bit magnets. These mechanisms occupy 44 inches of frame height and are located in the lower portion of the frame, with bottom 12 inches above

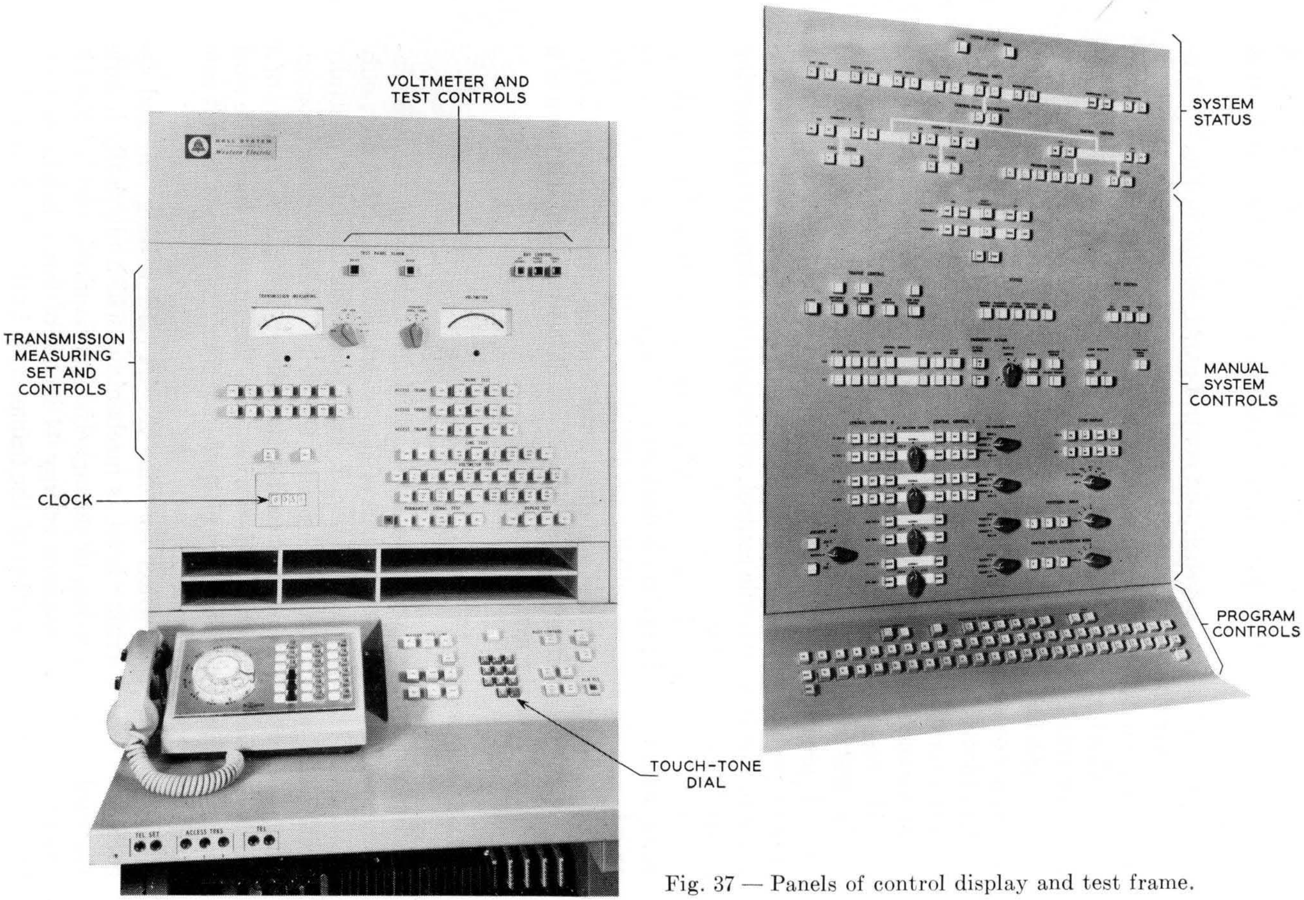

Fig. 37 — Panels of control display and test frame.

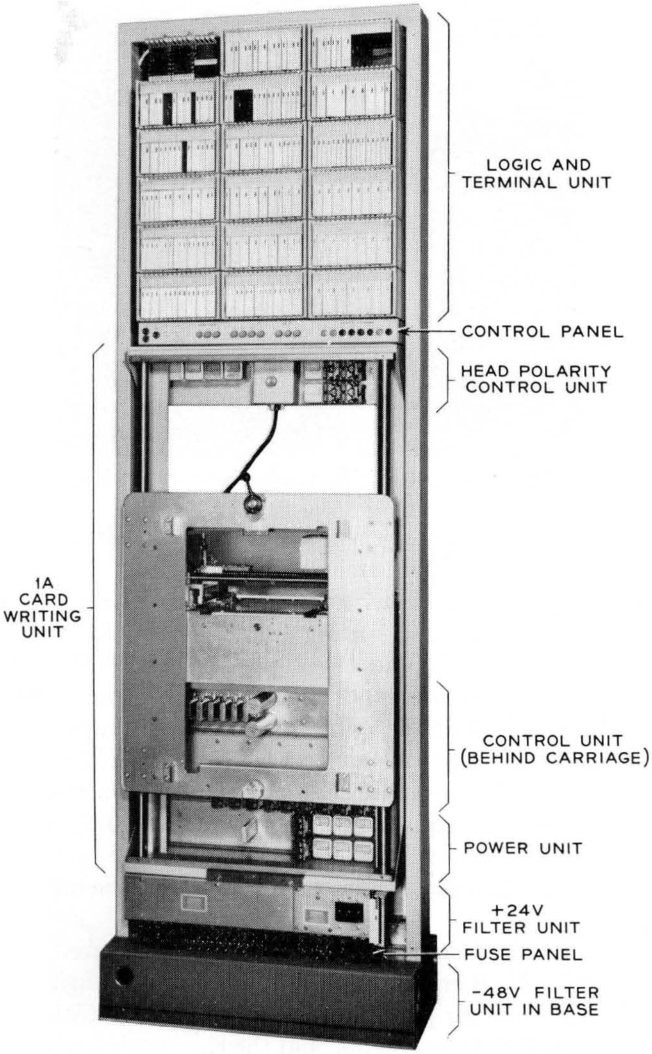

Fig. 38 — Memory card writer.

the floor for convenient attachment and removal of the card loader. The control panel is mounted immediately above the writing unit with the logic circuitry above. The head polarity section is mounted just below the control panel on the rear side of the writing unit, together with the connectors for the writing head.

Other control circuits which are closely associated with operation of the

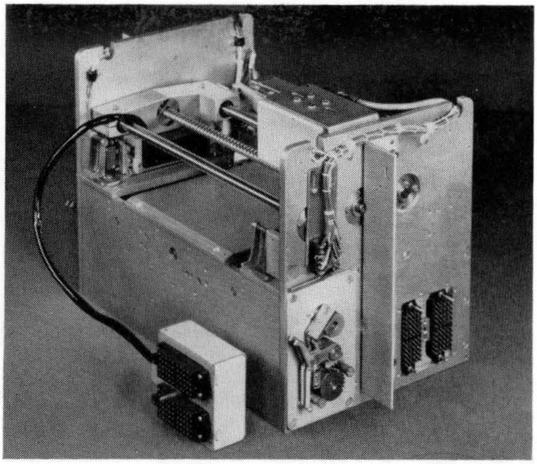

Fig. 39 — Card writing mechanism — end view.

writing unit are mounted near the lower end of this unit, on the rear side, together with a power control unit.

For normal operation, a loader with cards to be written is mounted to a movable carriage on the card writing unit with the left, or "A" end up. At this time the carriage is in its lowest position. The WRITE button on the control panel is then depressed to start the card writing sequence for pass A. When the 64 cards with upward-facing magnets have been written, a buzzer sounds and an INVERT LOADER lamp lights to signal that pass A is complete, and indexing pawls are automatically retracted, allowing the carriage and loader to return to the starting position. The speed of this downward motion is controlled by two hydraulic cylinders. A rubber bumper cushions the shock when the carriage reaches the bottom.

The loader is then removed from the carriage, inverted end-for-end, and reattached with B end up. The WRITE button is again depressed, starting the sequence for pass B. When writing is complete, the buzzer again sounds, an END lamp lights, and the carriage is again returned to its down position.

6.8.3.1 *Card Writing Unit.* The 1A card writing unit, shown in Fig. 39, consists of a framework with a central, easily removed mechanism for handling the cards, a 1A card writing head which is attached to this mechanism, and the rectangular carriage at the front, which is used to mount the card loader. The loader is supported on this carriage by a pin assembly at the bottom and by a lever-operated clamp at the top which engage notches in the ends of the loader. The vertical position of the carriage is determined by racks at the sides and by pawls at the ends of the central mechanism which engage these racks. The carriage is located horizontally by ball bushings in the corners which ride on the two vertical guide rails.

The central mechanism is capable of removing the cards, one at a time, by means of two finger assemblies which can be driven backward and forward in slots of the writing table. These assemblies are shown in the extended position in Fig. 40. The L-shaped details at the sides actuate switches to signal whether the loader is correctly mounted for pass A or pass B, as may be required. The fingers are spring-tensioned downward against a stop surface. The front ends are hooked and tapered so that as the fingers are driven toward the cards, the tapered ends ride up over the edge and surface of the card until the hooks drop into small, rectangular perforations provided in the cards for this purpose. The fingers are then driven backward, drawing the card across the writing table until the card comes to rest against fixed backstops. The fingers are also spring-tensioned in a longitudinal direction to avoid high forces when the card strikes the backstops. The motion of the finger assemblies is stopped by operation of switches which brake the finger drive motor to a stop, and

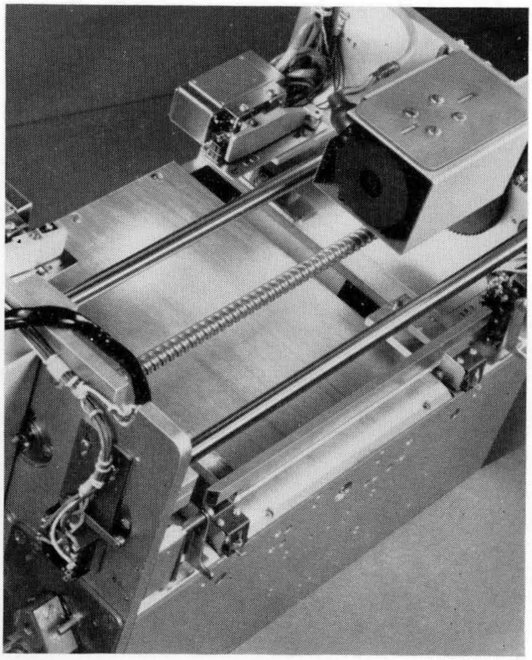

Fig. 40 — Card writing mechanism — top view.

start the drive motor for the writing head. The motors are 208-volt, 3-phase to increase reliability and to deliver a more uniform speed of head travel.

As the writing head passes over the length of the card, it magnetizes the initializing magnets, senses the location of these magnets, and writes each bit of each word as it passes by. Use of the initializing magnets for position-sensing avoids the need for critical mechanical tolerances in longitudinal card and head positions. After the last word on a card is written, switches in the top center of Fig. 40 sequentially disable the sensitive position-sensing circuits and reverse the head drive motor to return the head to its normal position at the left end. Other switches at the left then start a sequence of operations which cause the finger assemblies to insert the card back into the loader, disengage the card by raising the fingers until the hooks clear the top surface, withdraw the fingers to an intermediate position near the center of the table, raise the loader one step by means of the solenoid-operated pawls, drive the fingers forward a fixed distance sufficient to insure engagement of the next card, and repeat the process.

6.8.3.2 *Card Writing Head.* The card writing head, shown in Fig. 41, incorporates a number of design features which have been found necessary to meet its demanding requirements. The head is spring-tensioned against the surface of the card by means of four phosphor-bronze leaf springs. It is supported by two rollers (with ridges which rest on the card in the spaces between the magnets) and a single ball bearing outside the magnet area at the left end. This complex suspension is needed to

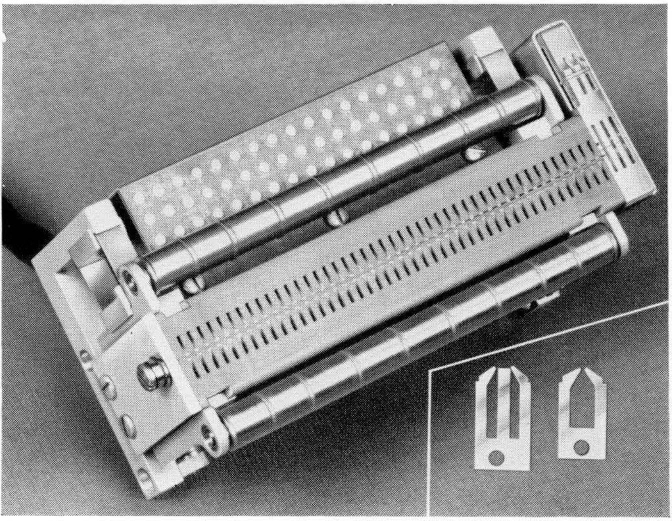

Fig. 41 — Card writing head.

maintain control of the spacing, designed for the range 0.0005 to 0.0015 inch, between the pole pieces and the magnets on the card.

The 45 writing sections of the head contain 6 laminations each, of the type shown in the inset at the right in Fig. 41. Each lamination is 0.006 inch thick, is made of Allegheny-Ludlum Company No. 4750 (similar to a purified No. 45 permalloy) to achieve higher saturation flux, and is insulated on the surfaces with magnesium methylate. The coils are wound in place on one leg of each group of laminations, using solenoid-winding techniques. Each section is shielded to prevent interference between sections. The sections are assembled in the head with the windings on alternate sides to fit on the required 0.100-inch centers. A phenolic spacer holds the air gaps in alignment.

Pole pieces for the initializing heads are similar to those of the writing sections but are of unlaminated No. 45 permalloy, with the coil on the upper yoke between the legs. Each of the two sensing sections contains 9 laminations of 0.004-inch thick No. 4-79 permalloy, which was chosen for high permeability at low flux densities. As shown in the inset, the sensing laminations have two air gaps with spacing which corresponds to the effective length of the initializing magnets. After all sections are assembled in the head, the surface is lightly ground to bring the tips of the laminations, gap spacers, and body to a common plane.

Early experience showed the need for a nonmetallic body for the writing sections to avoid excessive eddy current losses. Phenol fiber was chosen because of its close match in temperature coefficient of expansion with aluminum used for other structural parts.

The flexible cable which extends between the head and connectors at the top of the writing unit uses 28-gauge wire which is stranded and Teflon-insulated to avoid fatigue failures.

6.8.4 *Card Loader*

The 1A card loader, shown in Fig. 42, is used (a) to insert the twistor memory cards into and to withdraw them from the twistor memories in the program store, (b) to transport the cards between the program store and the memory card writer, and (c) to support the cards on the memory card writer.[6] The loader is a box-shaped structure with one side open and with narrow grooves in the top and bottom surfaces, shown in Fig. 43, to support the cards in the same relative position as in the memory module. The end castings, handles, top and bottom plates, and other structural parts are made of magnesium to minimize weight. Even so, the loader weighs approximately 24 pounds when empty and 40 pounds when filled with cards.

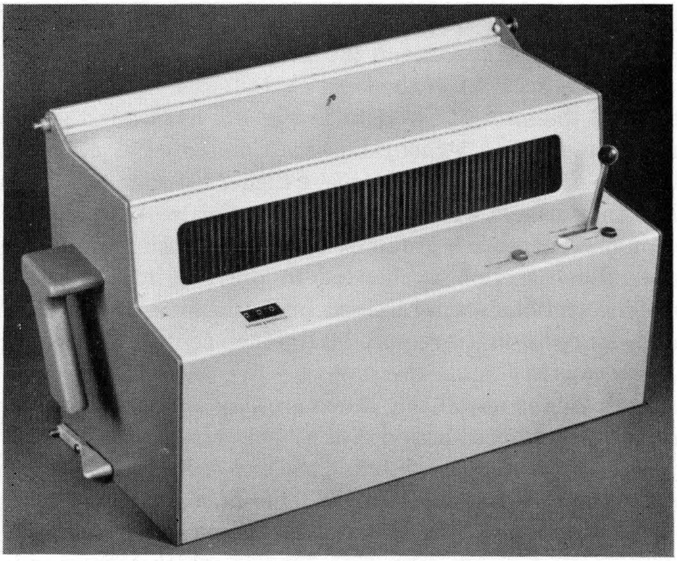

Fig. 42 — Card loader with cards — view of control side.

The cards are engaged by pins on individual finger-like actuators which are arranged in two rows and are attached to a common extruded-aluminum traverse bar. This bar is supported and driven by ball screw shafts at the ends, which are coupled through worm gear speed reducers to a small 115-volt ac-dc motor in the rear center. The screw shafts move the traverse bar through its 7-inch range of motion in about $\frac{1}{2}$ minute

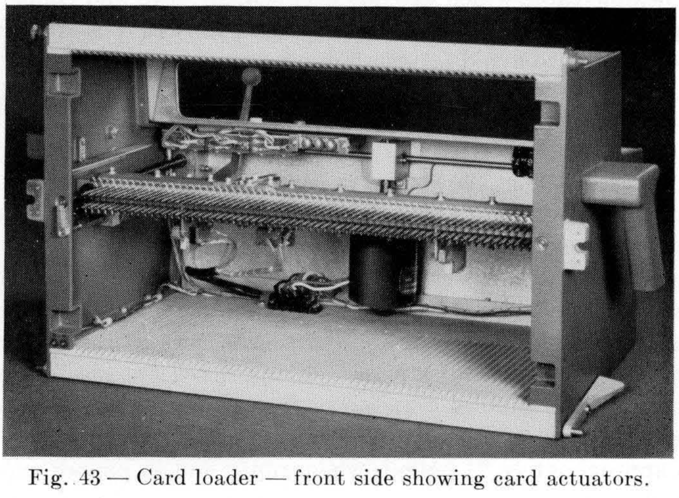

Fig. 43 — Card loader — front side showing card actuators.

with the motor operated on 48 volts dc. The actuators are pointed at the tips and are inserted between pairs of cards in the wider spaces opposite the twistor planes. Movement of an operating lever at the rear causes a gang rotation of the actuators, which causes small transverse pins to enter the openings provided in the cards for this purpose.

The insertion force exerted on each card is controlled within the range 4 to 6 lbs by means of individual, pretensioned springs and an interlock which removes power from the drive motor if the force on any card reaches the upper limit. This assures proper seating of each card in the memory module and protects the memory from damage if a card should jam or stick. Since all cards are inserted simultaneously, the loader must provide total seating forces of 500–700 pounds, sufficient to cause serious damage without the protective interlock.

In use, the loader is precisely positioned on the memory module by means of pins in the four corners, which engage slots in corresponding ears on the module. The cards are engaged or released from the drive mechanism by the operating lever, while the motor drive is controlled by INSERT, NEUTRAL and WITHDRAW buttons on the control shelf. The neutral position is achieved when the actuator pins are centered in the card slots, permitting engagement or release without disturbing the cards or developing high friction forces.

Some features of the loader provided to achieve reliable operation are as follows:

(a) A window above the control shelf permits viewing irregularities that might occur during operation.

(b) The motor receives power through two spring-loaded pin contacts which bear against disk-shaped contacts on the memory module. This construction permits appreciable misalignment in any direction without failure.

(c) A filter in the motor circuit prevents electrical interference from being transmitted to sensitive circuits in nearby frames.

(d) Many points of wear are protected by use of special bearing surfaces.

(e) An adjustable indicator on the control shelf helps the operator keep track of the store and memory module with which he is working.

(f) During card writing, surfaces of the loader engage microswitches on the card writer so that incorrect mounting for a writing pass is detected electrically.

(g) When the cards are fully withdrawn into the loader, the lower ends are held by friction grips which prevent the cards from shifting accidentally when the actuators are disengaged.

(h) A mechanical interlock permits the loader to be attached to the card writer only when the actuators have been disengaged as needed for the writing operation.

6.9 *Power Distributing Frame*

The power distributing frame is the battery load distributing point of the system. The three power feeders (−48 volts, ground, and +24 volts) from the power plant terminate on bus bars on the frame. These bars in turn supply the fuse blocks for individual frame feeder fuses. Two 35,000-μf capacitor banks are provided near the bottom of the frame to provide low-impedance shunt filters across the power supply feeders (−48 volts to ground and +24 volts to ground).

The individual load frames are supplied by feeder pairs or triples (as required by frame loads) from 5-, 15- or 30-ampere cartridge type fuses having $1\frac{1}{3}$-ampere alarm fuses in parallel with them.

Each power distributing frame has a 400-ampere peak capacity for each voltage and is located in the office area of the frames it serves. Duplicated circuits are fed from different power distributing frames.

6.10 *Ringing and Tone Supply Frames*

In keeping with the application of semiconductor circuitry to perform switching functions, new forms of ringing and tone supply equipment have been designed. Two sizes of plants are available to accommodate the wide range of office requirements — a $\frac{1}{2}$-ampere capacity plant, shown in Fig. 44, and a 6-ampere plant. In both sizes the frames are located in a switchroom frame line.

These plants (806H and 808A) provide ringing current, tones, and signaling interruptions. Twenty-cycle ringing (not audible) is generated by 110A frequency generators which furnish a regulated output. All tones except high tone consist of two signals, generated by transistor oscillators, which are added together and amplified in power transistor amplifiers. Duplicate 20-cycle ringing generators, tone generators, and interrupters are provided. Normally all generators are running, but only the interrupter supplying the load is powered. The outputs of both ringing generators are monitored for high and low voltage by the system; it selects the generators to be used and automatically transfers to the other set of generators in the case of failure. All generators and interrupters are transferred as a unit. Manual controls are provided to supersede automatic control when necessary.

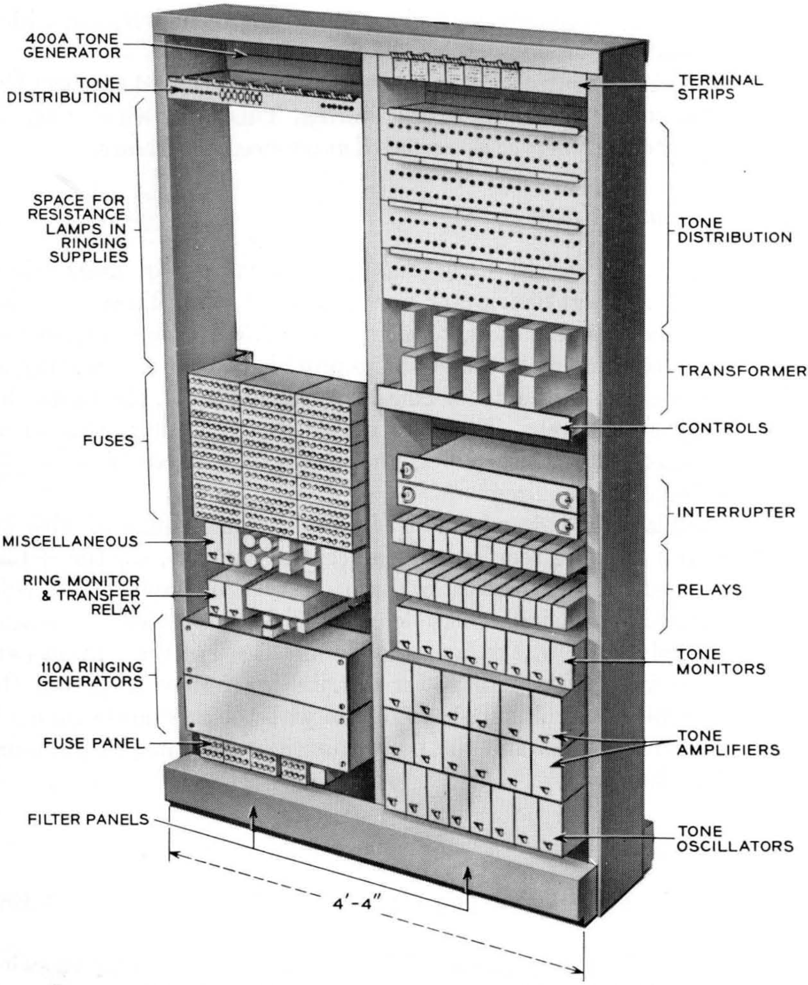

Fig. 44 — Ringing and tone supply frame (806H).

All ringing and tone supply fuses, decoupling resistors, and resistance lamps required by the various load frames are located on this frame.

6.11 *Recorded Announcement Frame*

The recorded announcement frame provides for a maximum of 6 announcements on a magnetic drum recorder (approximately $9\frac{1}{8}$ inches diameter and $1\frac{9}{16}$ inches long). Each announcement channel has a record-reproduce amplifier associated with it. Distributing resistors are provided for each announcement channel to isolate the outputs, which may total 120 (20 per channel).

The supervisory control unit, a 624 telephone set, is used to select the desired channel for recording or monitoring. This unit, which may be remotely located, can serve two recorded announcement frames.

6.12 *Miscellaneous Frame*

This frame is designed to accommodate a variety of units which require neither signal distributor nor scanner control. These units include emergency manual lines, supplementary AMA tape recorders (for those offices requiring more than the two provided on the AMA-teletypewriter frame), a multiplicity of common systems units, the power for test battery supply, etc. They are designed to accept a number of standard power filter, fuse panel, and control panel combinations to meet varying office requirements.

The miscellaneous power frame is the above frame equipped with (a) the +4.5-volt supplies required by the central controls, (b) the +130-volt and −130-volt fuse panels, (c) the ac distribution panel for 208-volt, 3-phase and 120-volt, single-phase loads requiring protected or essential 60-cycle supply, and (d) the floor alarm units. Two of these frames are located near the first pair of power distributing frames to permit the central control +4.5-volt supply to be run with the ground return cable between central control and the power distributing frame to minimize stray noise pickup.

6.13 *Power Plants*

As shown in Table V, the power plants associated with a No. 1 ESS include:

(a) Two 111A battery plants with very large battery voltage swing tolerances, which avoid emergency cell switching and counter-cell switching. One is a −48-volt plant with a voltage range at the power distributing frames of −43.75 to −52.5 volts. The other is a +24-volt plant with a voltage range at the power distributing frames of +21.75 to +26.25 volts. Power from these plants in the power room is delivered to two or more power distributing frames in the switchroom.

(b) The ringing and tone supplies are located in the switchroom. These are described in Section 6.10.

(c) +130- and −130-volt dc-to-dc converters (610B power plant). These units convert the −48 volts to the potentials needed for coin control. Power from these plants is delivered to fuse panels on a miscel-

TABLE V — POWER SUPPLIES

Power Supplies	Type of Plant or Unit	Capacity (Rated)	Code
In power room			
−48 volt dc (−43.75 to −52.5 volts)	storage batteries (without emergency cell or counter cell switching) rectifier charged	10–800 amp	111A
+24 volt dc (+21.75 to +26.25 volts)			
+ 130 volt dc	dc-to-dc electronic conversion from −48 volts for coin control	¾ amp	610B
−130 volt dc		2 amp and 5 amp	651A
Reserve ac supply	dc motor-driven alternator for 120/208 volt, 1- and 3-phase power	1½ kw	504B
		5 kw	
In switchroom			
Ringing and tones on RT frame	electronic generator with a precise tone plan	0.5 amp	806H
		6 amp	808A
+4½ volts on MP frame	derived from +24 volts		
PBX talking battery filter on misc. frame	coil and capacitor panels	15, 25, and 50 amp	
±120 volt for Frames: AMA-TTY CDT RA RT Misc. for TTY data sets, test battery supply unit, 2A sending panel	commercial power with or without reliable supply distributed from MP frames		
Appliance outlets Frame lighting	distributed from ceiling-supported busway		
±208-volt, 3-phase for AMA-TTY and CW frames AMA recorders on misc. frame	commercial power with or without reliable supply distributed from MP frames		
±208-volt, 1-phase for RT frame			

laneous power frame in the switchroom and distributed to all frames in the office which require it.

(d) A small, emergency 504B alternating current plant (with an alternator driven by a dc motor). Protected power from the 208-volt, 60-cycle, three-phase alternator is delivered to a circuit breaker and fuse panel on a miscellaneous power frame in the switchroom. From this panel single-phase and three-phase power is distributed to all frames in the office which require ac power at any time commercial power fails.

(e) An engine alternator to substitute for commercial power to charge batteries and supply essential ac loads after power failure has persisted for a time.

VII. INTERCONNECTING METHODS

The use of high-speed electronic circuits in packs assembled in large numbers has introduced a variety of restrictions in the unit, frame, and interframe wiring. Distributed impedances on circuit packs and their interconnecting wiring must be very rigidly controlled in a nanosecond pulse system. The control of transient noise requires (a) the use of compartmented cable racks, (b) segregated cable and wiring paths on the frames, (c) filters on all dc power supply feeders, and (d) special frame grounding practices. Some of the related problems and their solutions are discussed here.

7.1 *DC Power*

Early tests of the dc power distribution system coupled with tests of major functional elements (brass-board variety) showed the need to introduce load filters at the functional frames in addition to a common low impedance filter within the switching equipment area. Three conductors (+24-volt, −48-volt and a common ground feeder) are run from the power discharge fuses to each of the power distributing frames (centralized power distribution points) where low-impedance shunt filters (35,000-μf capacitor banks) are provided for the +24- and −48-volt system.

Individual frame filters (usually choke input L type or capacitor input π section) are designed to restrict the rate of change of current on the frame supply feeders to less than 0.1 ampere per microsecond. This limits the noise produced at the power distributing frame filter to less than one volt. The central filter can adequately attenuate the noise transmitted to other frames to less than 0.5 volt.

Power distribution leads are run as two- or three-conductor cables between the power distributing frame and the individual frame filter panels. The frame feeder sizes have been matched, as have the filters, to the frame load requirements to insure adequate system operation under conditions of commercial power failure (within the engineered battery reserves). A maximum drop of one volt* between the power distribution (PD) frame and the individual frame fuse panel bus is anticipated (within a maximum loop distance of 175 conductor feet).

All even-numbered frames (except the program store and frames having duplicated control equipment such as the network frames) will be fed from an even-numbered PD frame and all odd-numbered frames from an odd-numbered PD frame. Two sets of feeders, one from each PD of a pair, will be run to those frames having duplicated control equipment.

To minimize noise caused by stray ground circulating currents or by transient noise potentials within the building, all frames and cable rack are insulated from the building at the time of installation. The frames (and cable rack) are bolted together and individually bonded to a No. 6 AWG frame aisle ground conductor. This ground network connects to the ground bars of the PD frames to provide personnel protection. The PD frame ground bars are interconnected with 750 MCM cables. This ESS ground network is connected to the central office ground, the protection frame ground and ac power entrance ground at only one point (ac neutral or ground return conductors are not connected to the system ground within the ESS switchroom.)

Cable racks (and conducting cable sheaths) from any uninsulated frames (including the protector frame, power room frames, and any in other switchroom areas) are insulated from the ESS frames by insulating pads, fasteners, or isolating sections. Power plant ground returns are similarly insulated from their power plant frames.

Limited amounts of +130 volt and −130 volt power (voltage limits 125 to 135 volts) are required for coin control but no other No. 1 ESS functions. These are distributed to the coin trunks via the 130-volt distributing fuse panels located on the miscellaneous power frame.

7.2 *AC Power*

Some critical ac loads which can tolerate a service interruption of only a few seconds are: (a) AMA magnetic tape recorders, (b) recorded announcement machines, (c) maintenance teletypewriters and data sets, (d) master time-of-day motor, (e) tone interrupter, and (f) 20-cycle static subharmonic ringing generator in smaller offices.

Normally these loads will be operated from commercial ac service. In the event of ac power failure, the 504B emergency power plant will

---

* In the case of the junctor frame, this figure is allowed to be 1.7 volts maximum, since this will not result in denied service or a reduction in supervisory range but only a slight transmission impairment on limiting loops.

supply the needed 3-phase, 208-volt and single-phase, 120-volt, 60-cycle power within 5 seconds.

This protected ac supply as well as the essential ac supply furnished by the standby engine alternator is distributed from an ac distribution panel located on a miscellaneous power frame. This panel is equipped with circuit breakers for the 3-phase and single-phase, 280-volt loads, and fuses for 120-volt, single-phase loads. A power factor correction panel is also supplied to compensate for highly inductive loads.

New cables (410A and 411A) were coded to provide 18-gauge triples and pairs for ac distribution. These PVC-insulated cables have a distinctive yellow sheath to permit easy identification.

7.3 *AC and DC Cabling*

The ac and dc distribution cables are run from the miscellaneous power and power distributing frames in the rear (wiring aisle side) of the frame line cable rack. Power cross-aisle racks are provided as required to distribute these cables to their proper frame lines. There, ac cables are dressed down the rear of one frame upright while the dc cables are contained within one or more frame uprights.

7.4 *DC and VF Signaling*

DC signaling leads, relay connections, and tip and ring leads through the networks and trunks are subjected to a wide variety of transient noise pulses. In an all-relay switching system, these transients usually do not cause a system malfunction, because of the inherent insensitivity of the relay network.

7.5 *AC Pulse Signaling*

Master scanner pairs and manual override pairs from the master control center are not very noisy nor very vulnerable to noise. These are relatively long cables which have intimate contact with logic circuitry, so there is some danger that any noise they generate or transmit could disturb more sensitive areas. Their exposure to relay noise could introduce this noise into vulnerable areas of logic. The 0.5-microsecond unipolar pulses carrying data and control information between the central control, central pulse distributor, master control center, stores, and peripheral units are the most vulnerable to the noise of signaling connections. They are run as balanced circuits and brought into each frame through shielded transformers, with the lead length on the unbalanced output to the cable receiver kept less than 18 inches.

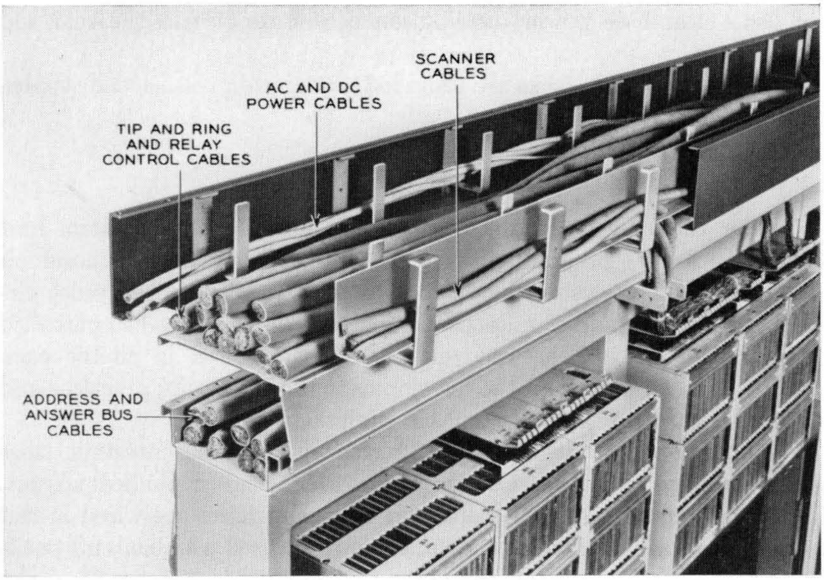

Fig. 45 — Compartmented cable rack.

The 0.5-microsecond signal distributor bipolar pulse leads are not noisy and are less sensitive to noise than the unipolar. However, they are still a problem, since they enter frames without using shielded cable receiver transformers, and these leads cannot be kept as short as those to the cable receivers.

7.6 *Cabling Practices*

Studies and laboratory tests showed that the economical answer to these interframe cabling problems lay, not in the use of shielded wire or coaxial cable, but in a compartmented cable rack as shown in Fig. 45. The 0.5-microsecond unipolar and bipolar pulse leads are run in the lower compartment (having removable front and rear covers) with minimum lead length exposure between the compartment and the transformers mounted at or near the top of each frame.

The scanner cables are run in a shielded channel at the front (maintenance aisle side) of the cable rack where they can drop down to frame terminal strips with relatively short exposures. The tip and ring leads and relay control leads are placed in the center top section of the cable rack. These cables are run over the scanner cables, down the front of the frame upright to the frame or unit terminal strips or ferreed switch terminals. AC and dc power distribution cables are run in the rear top section.

Separate cross-aisle racks are provided to maintain this needed separation between different classes of leads.

7.7 *Frame Wiring Methods*

During the brassboard development stages of central control and stores, the testing program proved that some wiring methods common to relay switching systems could not be used for high-speed pulse circuits. The lengths and parallel paths of signal wires had to be controlled to minimize crosstalk between circuits. This resulted in circuit pack placement restrictions and the development of new wiring practices and associated hardware suitable for this equipment.

Where present practices of unit surface wiring and interunit loose wiring and local cables can be used, this is the logical economical answer. In general, trunk units and trunk and network frames are wired in this way. This wiring method, as shown, can also be used where circuit packs and interconnections are less congested and circuit design permits.

Where high densities of circuit packs and wired interconnections exist, as in central control, special wiring procedures prescribe specific routings for surface wiring, loose wiring, and local cables. The following basic wiring rules are recommended:

(a) Use most direct route via horizontal and vertical runs.

(b) Do not sew signal wires into a cable.

(c) Surface or loose wiring can be used provided a multiple does not exceed 6 feet and other multiples do not follow the same path for more than 3 feet.

(d) Twisted pairs are used (one wire grounded) when multiples are 6 to 10 feet in length.

The wiring rules illustrated in Fig. 46 are the outgrowth of this development. Fig. 47 shows these rules applied in a wired frame. The individual mounting plates are first surface wired in the shop and verified with a dc test. The associated mounting plates of a unit are surface wired together. The loose wiring support details are then mounted on the units, and the units in turn are installed on the bay or frame. A preformed loose wiring harness is mounted on the support details and the leads are terminated.

VIII. DISTRIBUTING FRAMES

In many large central offices, the main distributing frame (MDF) now determines the length of the building. No. 1 ESS employs frames one-

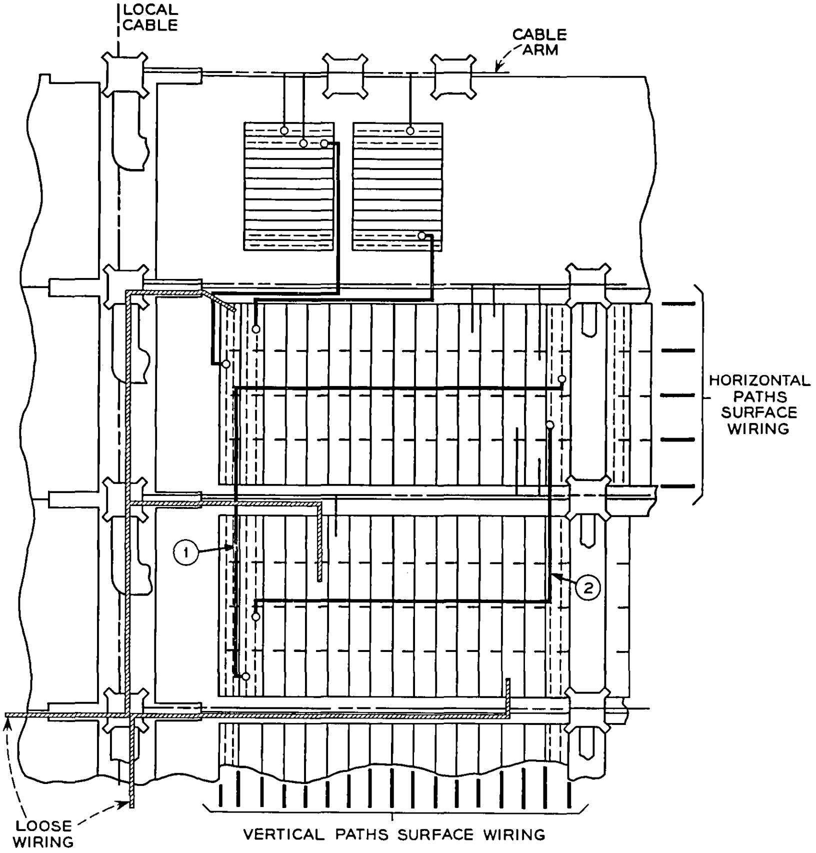

① SW LEADS FROM ODD TERMINALS START VERTICALLY AND RUN TO HORIZONTAL PATHS OF CONNECTING TERMINAL

② SW LEADS FROM EVEN TERMINALS START HORIZONTALLY AND RUN TO VERTICAL PATH OF CONNECTING TERMINAL

SURFACE WIRING AND LOOSE WIRING MAY MAKE A MAXIMUM OF TWO RIGHT ANGLE BENDS

Fig. 46 — Central control wiring rules.

half the height of these large MDF's and requires one-third the floor space of existing offices. Distributing frames of radically new design were needed to match the space economy of the new system. Fortunately, the new programmed logic, the electronic memories, and the nonexistence of sleeve leads eliminated some of the need for cross-connection capacity formerly required. Fewer jumpers are required and fewer changes are needed in the jumpers that remain. In preceding systems, the frequency of jumper changes is increasing and their costs are climbing every year. What was needed for No. 1 ESS, therefore, was a design which would

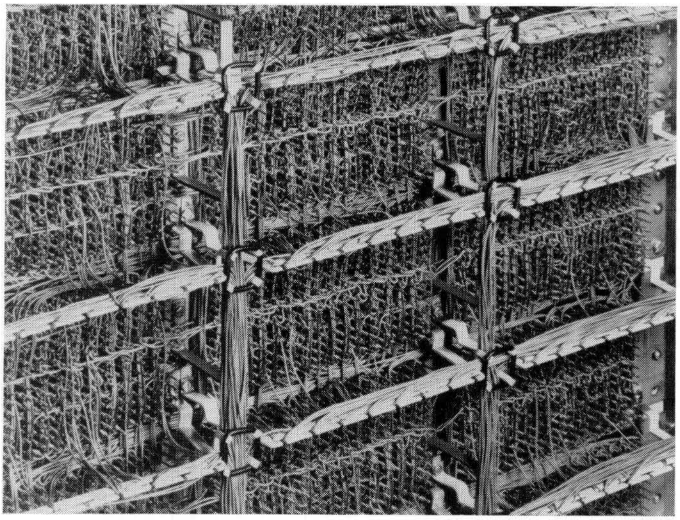

Fig. 47 — Central control wiring methods.

shrink the distributing frames to a compatible size and correspondingly reduce the cost of cross connections. This was accomplished with the new frame designs.

8.1 *Protector Frame*

One module of single-sided protector frame 6 feet, 6 inches long, 8 feet high and 1 foot deep (see Fig. 48) provides the protectors for 6000 outside plant pairs. A protector unit (without heat coils) guards against lightning and other high foreign potentials and serves tip and ring conductors of a pair. The connector for 100 protector units is shipped with a stub cable long enough to reach its termination in a cable vault or on a wall rack. The module has 12 verticals of five connectors each. Provision is made for test desk circuit appearances as well as for every needed maintenance access to any circuit or group of circuits. A compact loudspeaker system incorporates the microphone in a frame upright and the loudspeaker in the upper right-hand corner of the module. No plugging-up panels are required since lines in trouble are automatically routed to trouble intercept by central control. A conductor identification circuit will permit the cable splicer to identify pairs without manual help at the central office.

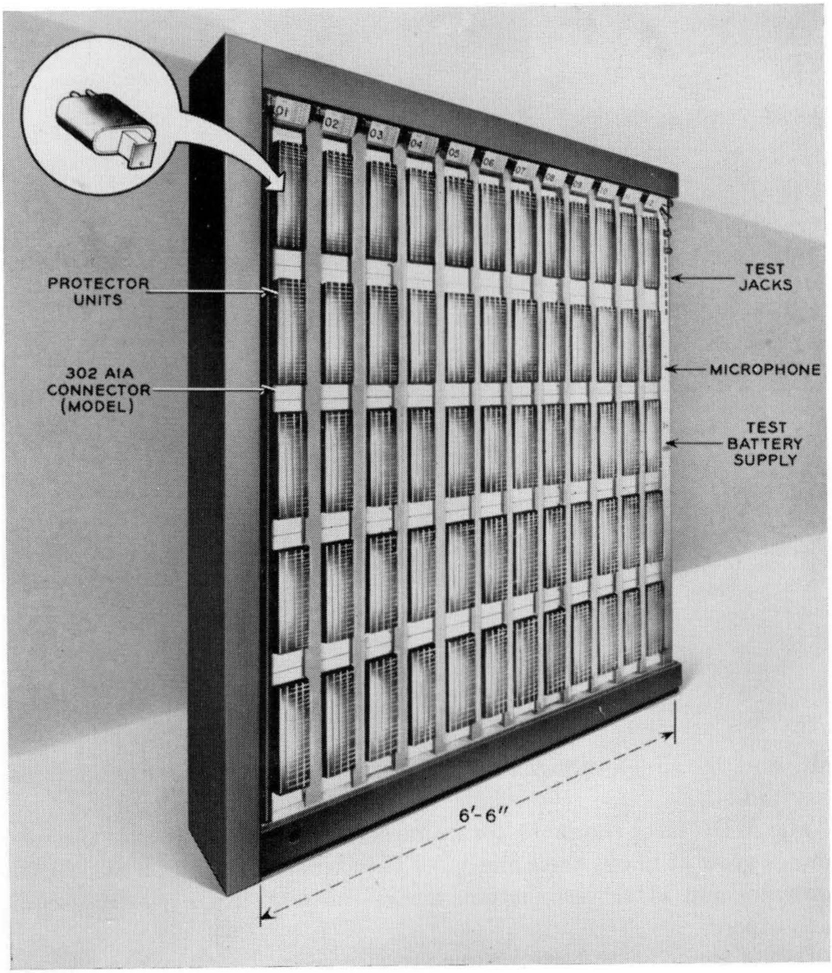

Fig. 48 — Protector frame.

8.2 *Main Distributing Frame (MDF)*

The MDF, shown in Fig. 49, makes a corresponding reduction in size by eliminating most long jumpers. Outside plant pairs and inside equipment pairs are interspersed in a manner which greatly reduces jumper length, the space for storing jumpers, and the space for making cross connections. The cost of making changes is reduced by the elimination of most long jumpers, by the introduction of "quick-connect" terminal strips, by avoiding changes completely where program and circuits per-

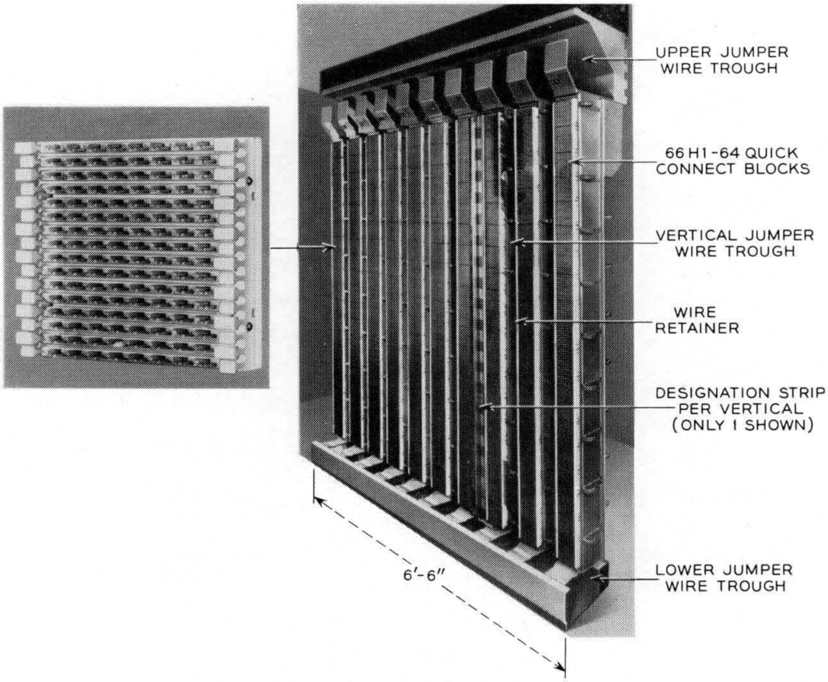

Fig. 49 — Main distributing frame.

mit, and by simple designation procedures which make terminations easy to find.

The MDF faces the protector frame across a 4-foot aisle, and the two frames grow at about the same rate. The frameman will find associated protector and MDF terminations across this aisle usually not far from each other.

Cables from the protector frame are interspersed with system switchboard cables on the single-sided MDF. Line link networks and auxiliary line circuits are cabled there directly; trunk, service, and associated auxiliary circuits appear first at an intermediate distributing frame (IDF) where they are cross connected to tie-cables to the MDF. Thus the trunk circuits have two jumpers each, for multiplied access to outside plant pairs.

A module of single-sided MDF is 6 feet, 6 inches long, 8 feet high and 1 foot deep. This gives 6000 pairs from outside plant access to as many as 6080 central office pairs. Connecting blocks on each of ten verticals have 1216 "quick-connect" terminal pairs in one plane on the front (each terminal arranged for two cross connections) and solderless wrapped terminals in one plane on the rear. The five odd-numbered verticals terminate 1200 protector frame pairs each. The five even-numbered verticals terminate 1216 system pairs each. Cabling patterns distribute protector and system pairs on their interspersed verticals in a manner designed to permit the great majority of all cross connections to be between adjacent verticals. Jumper troughs above and below the connecting blocks provide for the longer jumpers between nonadjacent verticals.

Lines from line link networks are distributed horizontally across the midsection of the system verticals. Line auxiliaries such as long-line circuits and bridge lifters are similarly distributed below them. The cables to the intermediate distributing frame (to cross connect to trunks and trunk auxiliaries there) are distributed horizontally across the upper sections of these verticals.

Each fully equipped vertical with pairs from the protector frame presents 1200 outside plant pairs for direct cross connection to as many as 2432 system pairs on the two adjacent verticals (left and right). The 1200 pairs on an intermediate vertical include 20 pairs from each of 60 different 100-pair cables from outside plant.

This vertical distribution of outside pairs combined with the horizontal distribution of system pairs guarantees a wide exposure of outside to system pairs of different types on adjacent verticals. To provide further homogeneity as an office grows, the protector frame modules are equipped in numerical sequence, as at present, but at each stage of growth, protector pairs are distributed over three MDF modules in a manner such that the last MDF module in a line-up is one-third filled when the second last module is two-thirds filled and preceding modules are completely filled.

Service observing cross connections for lines and PBX trunks are made on the rear of the MDF so that this activity does not interfere with the cross connecting of outside to system pairs on the front of the frame. Circuits from the service observing desk (and from a No. 6 service observing set) are distributed over small jack panels located at the top rear of the five verticals for protector frame pairs. Patch cords cross connect from these jacks to the rear of nearby line terminals as required.

To make all terminations easy to locate, a vertical designation strip is hinged in front of each vertical jumper trough. When rotated to the left or right, it covers the adjacent one-half of the jumper trough on that side. In either position it clearly designates all terminals in the vertical. Designation areas are in colors to assure quick identification of out-

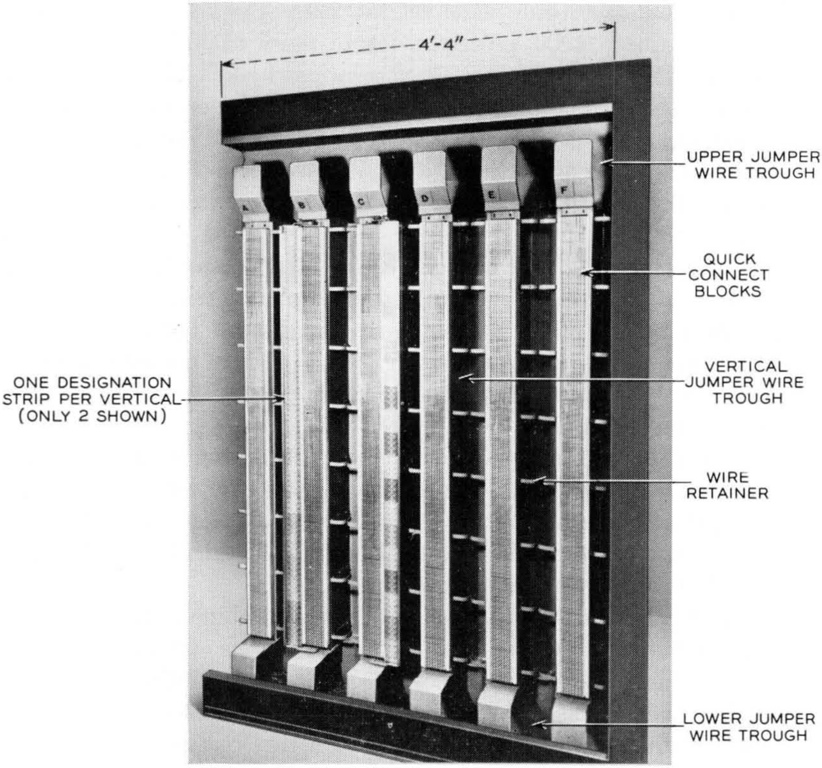

Fig. 50 — Trunk distributing frame.

side and system pairs and of the blocks of associated terminals in each. Blue and gray in alternate horizontal stripes identify the blocks of outside pairs; yellow and gray identify the system pairs.

8.3 *Trunk Distributing Frame*

A trunk distributing frame (TDF), shown in Fig. 50, fits in a frame line-up. It is similar to the MDF except that it has six verticals of 1216 terminal pairs each in a module 7 feet, 0 inch high and 4 feet, 4 inches long, and provides for only one connection on each quick-connect terminal. It terminates all cables from trunk link networks on the odd verticals and all circuits from universal and miscellaneous trunk frames on the even-numbered verticals to give short jumper cross connections between networks and trunks. This permits the traffic to trunk link networks to be balanced from time to time without recabling.

8.4 *Intermediate Distributing Frame*

The intermediate distributing frame (IDF) will normally be located at the head end of the MDF and in line with it, the two frames growing in opposite directions. Here the IDF will employ the same distributing frame module as the MDF. Occasionally, the IDF may be located in a frame line-up when shorter cable runs are needed to meet transmission limits. Here, the IDF employs the same module as the TDF.

In either case, the new IDF terminates all cables from equipment frames for trunk circuits, service circuits, and trunk auxiliaries (for carrier, repeaters, etc.) on connecting blocks of alternate verticals. Tie-cables from the MDF are interspersed on intervening verticals in a manner which permits most cross connections to be between adjacent verticals. Trunk access to protector pairs is thus multiplied by providing two jumpers (both usually short): one from the trunk to an MDF tie-cable appearance and one at the MDF between the protector and tie-cable terminals.

8.5 *Junctor Grouping Frame*

In No. 1 ESS, a new approach was developed for the distribution of junctors. In previous systems, junctors were cabled from the link frames to the junctor grouping frame (JGF), where they were interconnected directly or by jumpers in fixed patterns, depending on the number of line-link and trunk-link frames in the office. No 1 ESS uses plug-ended cords and jacks instead of jumpers. They are particularly attractive for additions, since junctors can be quickly redistributed by merely rearranging patch cords which have 16 pairs in each.

No. 1 ESS derives added benefits from this extremely flexible junctor redistribution. Junctor patterns in this system are a function of traffic type (intraoffice, interoffice, or tandem) as well as of office size, and this increases the number of patterns and the frequency of changes to balance traffic because: (a) Junctor circuits as well as network junctors are terminated on the junctor grouping frame, as shown schematically in Fig. 51. These circuits provide for the completion of intraoffice traffic without going through trunk-link frames. (b) Likewise, provision is also made on the junctor grouping frame for completing trunk-to-trunk traffic without going through the line-link frames.

The JGF shown in Fig. 52 fits in regular frame lineups under standard cable rack and is 2 feet, 2 inches wide. Frames are provided in pairs, one pair being required for each 16,000 lines in the average office.

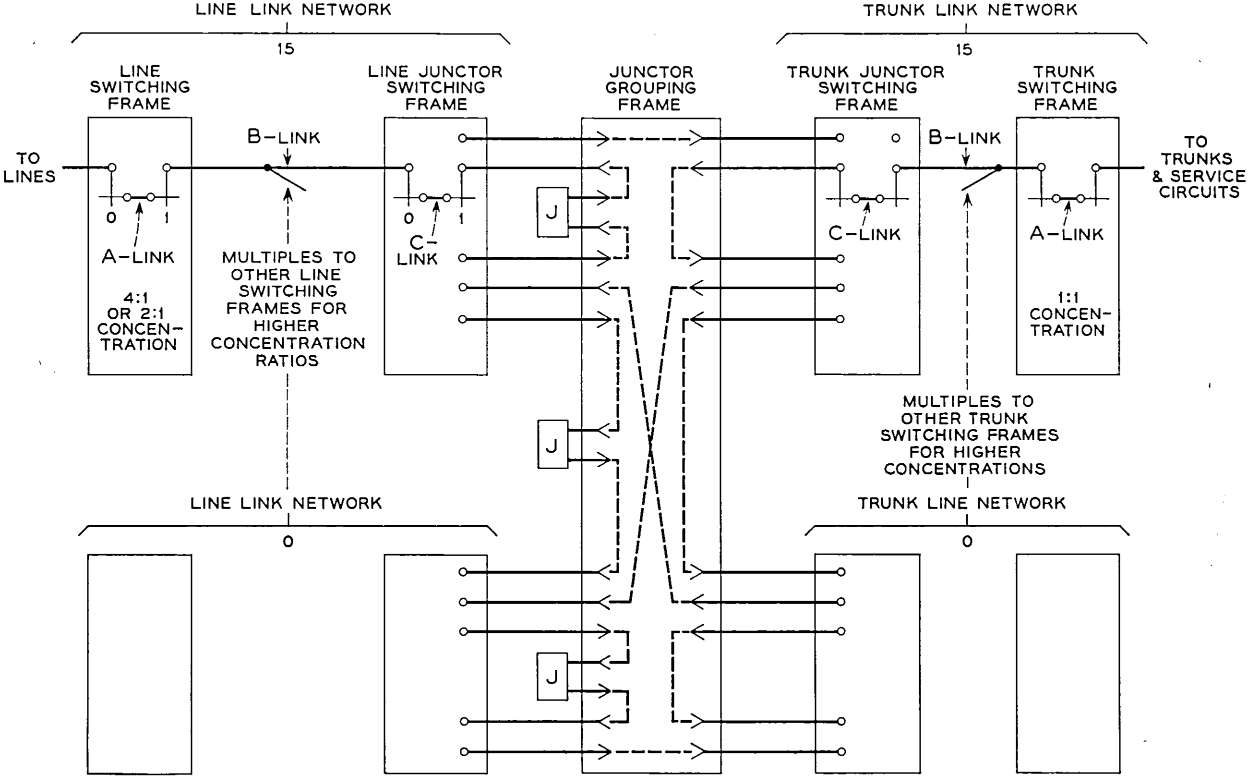

Fig. 51 — Typical connections for line link network and trunk link network.

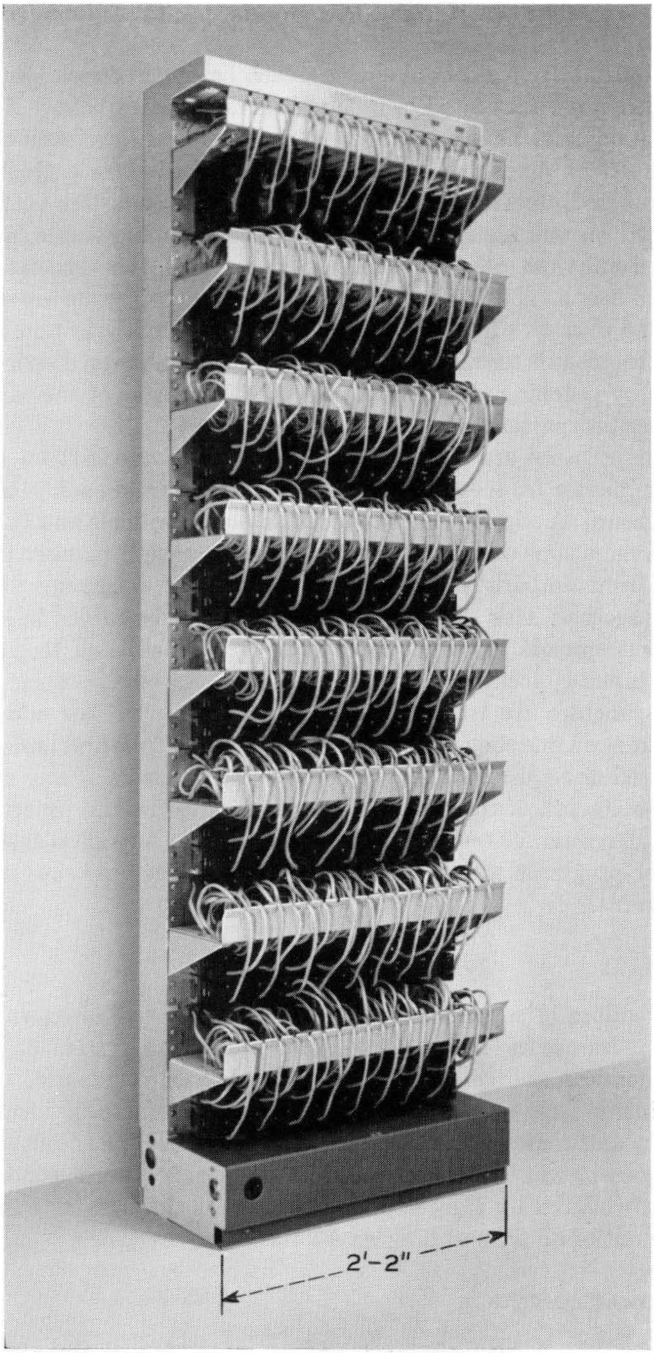

Fig. 52 — Junctor grouping frame.

On the front are eight cord shelves, each having eighteen 32-terminal plug-ended cords above and eighteen 32-terminal jacks below. The plugs and jacks on a frame are arranged in nine vertical files, each of which contains sixteen plugs and sixteen jacks, two of each for each shelf. All even-numbered junctors from one line-link or one trunk-link network are terminated on one file of an even-numbered grouping frame, and odd-numbered junctors on the corresponding file of the associated odd-numbered frame. The junctor circuits from a junctor frame are similarly distributed over two files; but being only half as many in number, two junctor frames are terminated on a pair of files. Junctor distribution is achieved by patching the plugs of one shelf into jacks of the same shelf in a prescribed pattern.

Sixteen junctors are terminated on each plug and sixteen on each jack, one junctor from each grid of a network (or from each junctor circuit subgroup). A slip is wired between the plug terminals and their associated terminations on the rear of the frame in such a manner that two junctors from similarly numbered grids or junctor subgroups are never coupled together. This slip permits all verticals to be cabled in identical fashion but spreads the junctors differently on each shelf to guarantee minimal junctor blocking.

When junctors are redistributed, all plugs of even- (or odd-) numbered frames on one shelf will be disengaged at one time and immediately reconnected as required. This will remove from service at any one time only one-sixteenth of the junctors from each network and junctor frame and thus have no serious effect on traffic if done outside a busy hour. Computer programs are being used to establish the optimum plug and jack patterns.

IX. SUMMARY

The wedding of a generic stored program with a limited variety of equipment frames in the No. 1 electronic switching system provides a new, economical, and versatile tool for the telephone customer. This system is introducing many new patterns in manufacture, installation, operation, and maintenance to the Bell System. The flexibility of this system concept will be demonstrated in the next few years as additional services are offered by the telephone companies through the continuing development of additional programs.

X. ACKNOWLEDGMENTS

As is the case in all complex systems, the apparatus and equipment described here are the result of the efforts of many people in several de-

partments of Bell Telephone Laboratories, particularly Systems Engineering, Systems Development, and Device Development. In addition, our associates in the engineering and production departments of the Western Electric Company have made many contributions.

REFERENCES

1. Keister, W., Ketchledge, R. W., and Vaughan, H. E., No. 1 ESS System Organization and Objectives, B.S.T.J., this issue, p. 1831.
2. Harr, J. A., Taylor, F. F., and Ulrich, W., Organization of No. 1 ESS Central Processor, B.S.T.J., this issue, p. 1845.
3. Downing, R. W., Nowak, J. S., and Tuomenoksa, L. S., No. 1 ESS Maintenance Plan, B.S.T.J., this issue, p. 1961.
4. Neumiller, E. G., The Electronic Central Office at Morris, Illinois, Bell Laboratories Record, **40**, Dec., 1962, pp. 402–407.
5. Genke, R. M., Harding, P. A., and Staehler, R. E., No. 1 ESS Call Store — A 0.2-Megabit Ferrite Sheet Memory, B.S.T.J., this issue, p. 2147.
6. Ault, C. F., Gallaher, L. E., Greenwood, T. S., and Koehler, D. C., No. 1 ESS Program Store, B.S.T.J., this issue, p. 2097.
7. Stammerjohn, L. W., An Evaluation of Design and Performance of the Permanent Magnet Twistor Memory, INTERMAG Conf. Proc., April 6–8, 1964, Washington, D. C.
8. Connell, J. B., Hussey, L. W., and Ketchledge, R. W., No. 1 ESS Bus System, B.S.T.J., this issue, p. 2021.
9. Chevalier, J. G., and Eisenhart, R. K., No. 1 ESS Circuit Packs and Connectors, B.S.T.J., this issue, p. 2441.
10. Pferd, W., Quick-Connect Clip Terminal, Bell Laboratories Record, **40**, June, 1962, pp. 202–207.
11. Cagle, W. B., Menne, R. S., Skinner, R. S., Staehler, R. E., and Underwood, M. D., No. 1 ESS Logic Circuits and Their Application to the Central Control, B.S.T.J., this issue, p. 2055.

No. 1 ESS Circuit Packs and Connectors

By J. G. CHEVALIER and R. K. EISENHART

(Manuscript received January 9, 1964)

The mechanical packaging design of any large electronic system can have a profound effect on the cost of the system and on its operating reliability. This article describes the No. 1 ESS packaging design and discusses the considerations which influenced it. Printed wiring packaging techniques are used for the individual circuit packs. A new connector and multiple board mounting, which allow considerable flexibility and a high degree of package density, were designed specifically for this application. A test program has established that the connector will perform reliably for a 40-year design life.

I. INTRODUCTION

The No. 1 ESS must compare favorably with existing switching systems in cost, reliability of operation, space requirements and ease of maintenance. The extent to which these basic objectives are achieved will depend to a considerable degree upon the mechanical packaging arrangement used for its electronic circuitry. The system must be packaged so that it can be mass produced economically and yet will operate with high reliability over a 40-year life.[1] Space requirements dictate compact packaging, although a high degree of miniaturization is not required. Once installed, any part of the system must be readily accessible for maintenance or replacement should the necessity arise.

At the present state of the packaging art, these objectives are best served with conventional printed circuit packaging techniques. The combination of a printed wiring board circuit pack and a molded wire spring connector is the basis of the packaging concept which was adopted for the No. 1 ESS.

II. CIRCUIT PACKS

Typical circuit packs are shown in Fig. 1. Each package measures approximately $3\frac{3}{4} \times 6\frac{7}{8}$ inches and can, where component sizes permit,

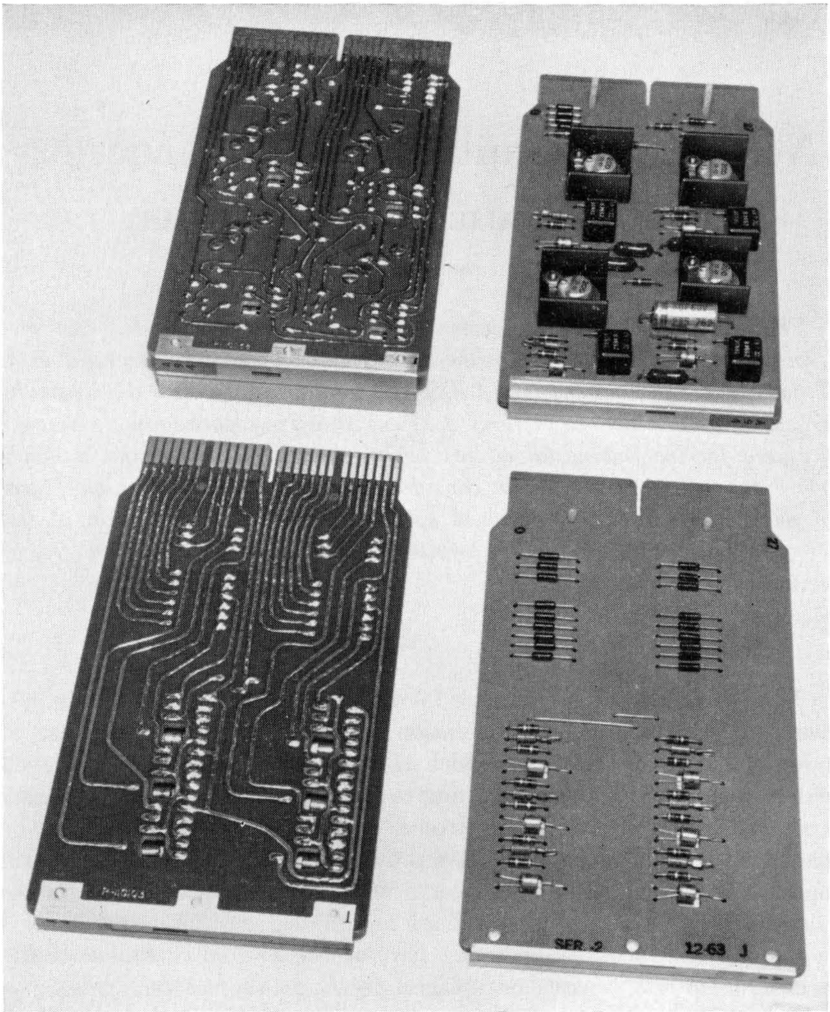

Fig. 1 — Typical No. 1 ESS circuit packs.

be mounted on 0.400-inch mounting centers. Twenty-eight contacts are provided on each circuit pack for supply voltages and interconnections with other circuit packs.

The printed wiring board is made from a fire-retardant grade of paper-based phenolic material. Its thickness is $\frac{3}{32}$ inch. In manufacture the board is blanked from sheet stock so that the grain of the laminate runs parallel to the $3\frac{3}{4}$-inch dimension of the board. Warp across the board contacts is minimized by this orientation. Most of the board warpage will occur in a direction perpendicular to the grain, and this is in the long direction of the board. Experience has shown that the $\frac{3}{32}$-inch boards have sufficient rigidity so that a stiffening frame is not required to control the warpage.

All the circuit packs use single-sided circuitry: i.e., the printed wiring is confined to one side of the board. This practice avoids the potential reliability hazards of through-connections and also simplifies the manufacturing processes. Special means are occasionally necessary to permit one printed conductor to cross another. Wire straps are used for this purpose. Nominally, the conductors are 0.050 inch wide with minimum spacings of 0.050 inch. In a few instances it is necessary to decrease one or both of these dimensions below the nominal value because of space limitations on the printed wiring board. The printed wiring is terminated in 28 contact fingers at one end of the board. These fingers are 0.070 inch wide by 0.380 inch long and are plated with a wear-resistant gold to serve as the circuit pack contacts. The conductors elsewhere are coated with a 0.001-inch thickness of 50/50 solder applied in a roller coating operation.

Most of the components are of the axially-leaded type. They are mounted on the blank side of the board with their leads brought through holes and soldered to the printed wiring on the opposite side of the board. The leads of the transistor used in the logic circuitry are specifically arranged to facilitate mounting on the printed wiring board. The base and emitter leads are brought through glass seals at the bottom of the case, while the collector lead projects from the top of the case. The transistor is then mounted so that its body is suspended over and projects down into a square cut-out in the board. This minimizes the projection of the transistor body above the board and decreases the width required by the circuit pack. For manufacturing purposes all component lead holes are located by the coordinates of a grid pattern with 0.150-inch spacings in the long direction of the board and 0.250-inch spacings in the short direction. The circuit pack provides space for about 70 typical components, although one circuit pack has as few as 6 components and another as many as 84.

After component assembly and electrical testing, an acrylic lacquer is spray applied to the wiring side of the board except in the area of the contact fingers. This coating prevents the printed wiring and the insulating surface from coming into contact with contaminants such as dust, condensed moisture or fingerprints. The coating is thermoplastic and can be removed in the area of soldered joints when repairs are necessary.

As shown in Fig. 1, a short length of aluminum extrusion is riveted to the front end of the board. Code information identifying the circuit pack is printed on this strip. On the other end of the board near the contact fingers two nylon pegs are forced into holes in the board. These nylon spacers together with the identifier strip serve to support the circuit pack when it is laid component-side-down, thus protecting the components from damage.

In a typical 10,000-line No. 1 ESS office approximately 12,600 circuit packs will be required.[2,3] Thirteen per cent of these circuit packs will be identical, i.e., of the same circuit or code. Sixty-five per cent of the circuit packs will use only 17 codes. The entire system will require about 150 different codes. Component sizes dictate that about half of the 12,600 circuit packs can be mounted on 0.4-inch centers, while the rest must be mounted on 0.8-inch and larger centers.

III. CONNECTOR

A new connector was designed specifically to accommodate the No. 1 ESS circuit packs. Two departures from convention were incorporated into the design. First, the circuit pack contacts are provided on the board as an integral part of the printed wiring. It is not necessary to add a contact-carrying applique or plug unit to the board. Second, the connector uses single contacts instead of bifurcated or twin contacts.

Bifurcation is undoubtedly worthwhile in relays where contact action is intermittent and the major cause of contact failure is dust or other foreign particles. But printed circuit contacts are essentially static contacts, and contact trouble is more likely to be due to corrosion films which interfere with metal-to-metal contact. In this case, the two requirements most essential to reliability are an inert, pore-free contact finish and a high contact force. If these requirements are met bifurcation is unnecessary. If they are not, neither single nor bifurcated contacts will provide the 40-year reliability needed for the No. 1 ESS.

The contact springs of the connector are made from spring-tempered, Grade A phosphor-bronze wire. The wire is 0.036 inch in diameter and is solder coated for corrosion resistance. Twenty-eight of these wires are molded into a common phenolic strip to form the wire spring assembly shown in Fig. 2. The springs are divided into four groups of 7 springs each. Within a group the springs are located on 0.110-inch centers. The spacing between groups is somewhat greater to allow clearance space for rivets which must pass through the phenolic strip. One end of each spring is flattened and serrated for wire wrap connections, with

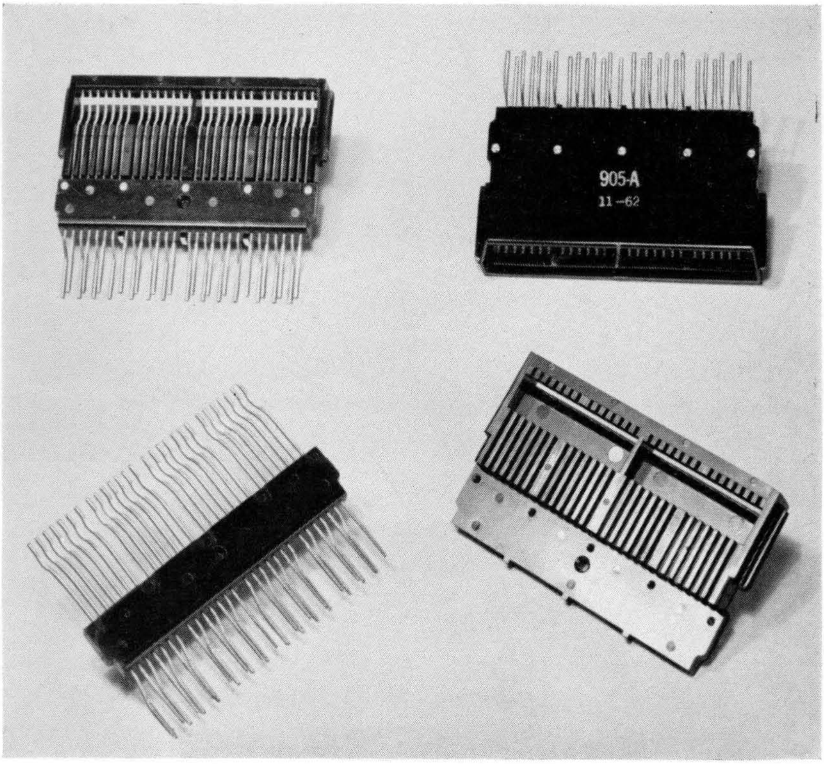

Fig. 2 — The connector assembly and the two main piece parts.

alternate terminals offset to allow access for the wire wrapping bit. The other end of each spring is formed to the correct configuration for the contact spring. A small contact button is welded to each spring at the point where contact will be established with the board.

The wire spring assembly is riveted to a second molded phenolic detail which is called the retainer. As the two parts are assembled the tips of the contact springs are forced against a surface of the retainer and are thus given an initial deflection or pretension. The retainer and the completed contact assembly are shown in Fig. 2. Fig. 3 shows in considerably more detail the pretensioning arrangement and the configuration of the springs. The tips of the springs are well protected from snagging. Even when the springs are fully deflected the tips will not project out of the contact assembly.

Fig. 3 also shows a magnified cross section of the teardrop-shaped contact button. The rolled overlay button consists of a 0.003-inch

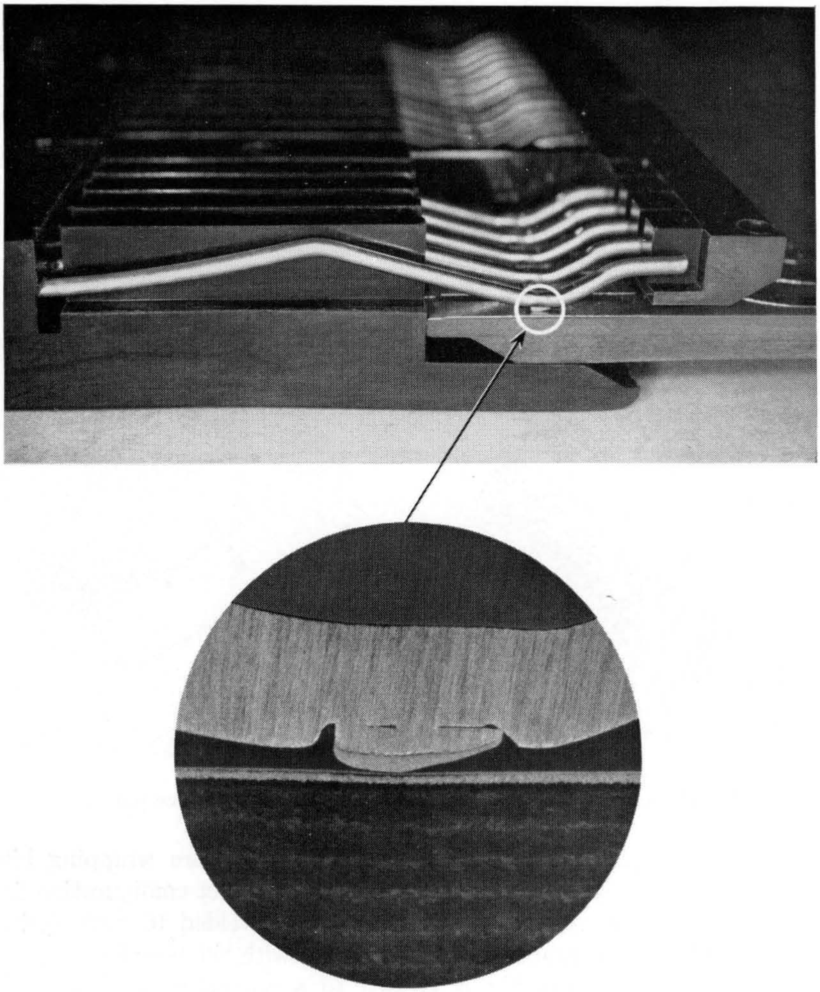

Fig. 3 — Connector spring and gold overlay contact cross section.

thickness of 24-karat gold and a base section of 80/20 copper-nickel alloy. The overlay material is supplied in tape form. It is cut to size and resistance welded to the contact springs in a continuous manufacturing process.

As a board is inserted into the connector, the board tongue enters a molded pocket in the retainer. Mating surfaces on the tongue and retainer pocket align the board so that the printed contact fingers engage and wipe against the spring contact buttons. Eventually the spring

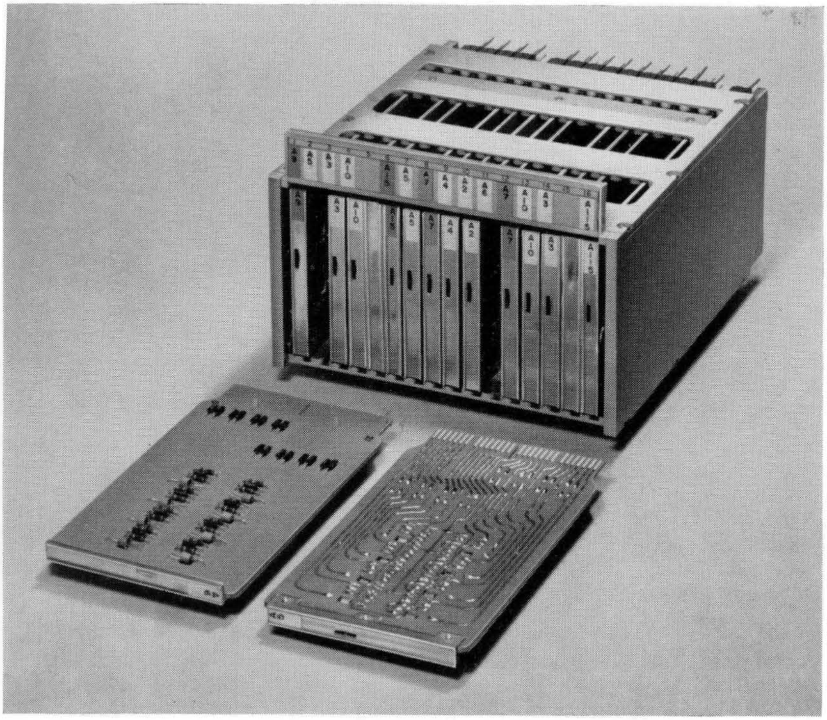

Fig. 4 — Circuit pack and connector mounting.

tips are lifted off the pretensioning surface, and the full contact force is applied to the board, forcing the tongue against the back of the retainer. The back surface of the board is specially contoured, as shown in Fig. 3, so that the contact force builds up gradually as the board is inserted. This minimizes the force required to insert the board.

IV. CIRCUIT PACK AND CONNECTOR MOUNTING

The mounting for the circuit packs and connectors is shown in Fig. 4. It is composed of upper and lower guide walls and two end plates which are assembled into an open box structure. All parts are aluminum die castings. Both of the guide walls and both end plates are identical parts, so that only one die is required for each. Two rectangular cutouts are provided in each of the guide walls to allow for the circulation of air between the circuit packs. The interior surfaces of the guide walls are lined with slots which are located on 0.400-inch centers. These slots locate the connectors and the circuit packs in the mounting. Molded

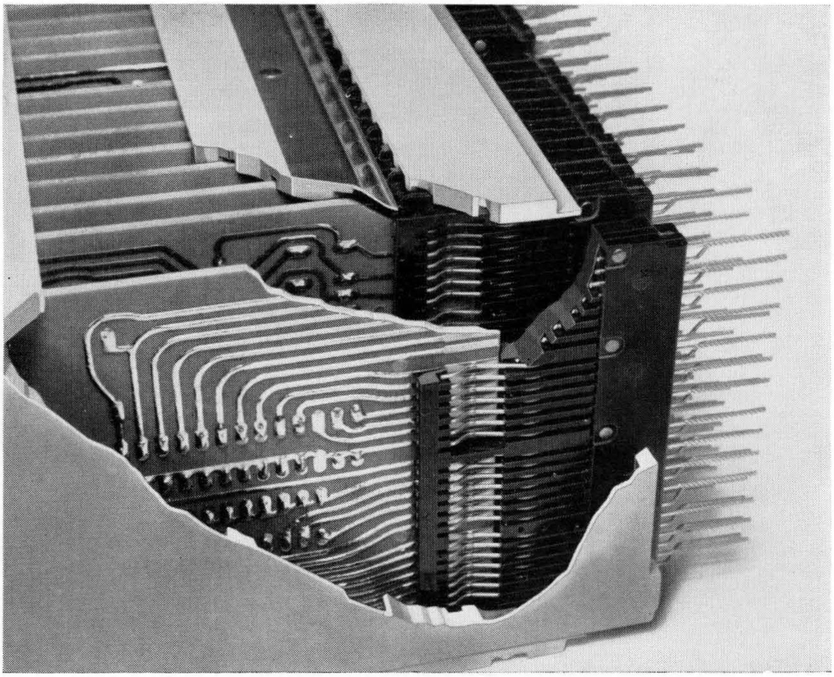

Fig. 5 — Cutaway mounting showing connector retaining latch.

keys at each end of the connector fit closely in the slots, which also align and guide the circuit pack into engagement with the contact springs. The slot entrances are funneled to facilitate entrance of the board. The connectors are retained in the mounting by stops in the slots and by spring latches which are riveted to each of the guide walls. As shown in Fig. 5, the latches are formed so that they project into the slot area. As the connectors are assembled in the mounting, the spring latches are deflected outward by the molded keys on the retainer. When the connector is completely inserted, the spring latches will snap back over the keys, thus locking the connector in place. A connector can be easily removed by deflecting the upper and lower latch springs past the point where they restrain the molded keys.

A designation strip is provided on the front of the mounting so that the circuit packs can be readily identified. The strip is rotated 180° to remove or insert packages. Package designations in the form of a letter-number combination and a color coding system are included on the designation strip and also on the circuit pack identifier. Correct location of a circuit pack is assured by matching the code number and

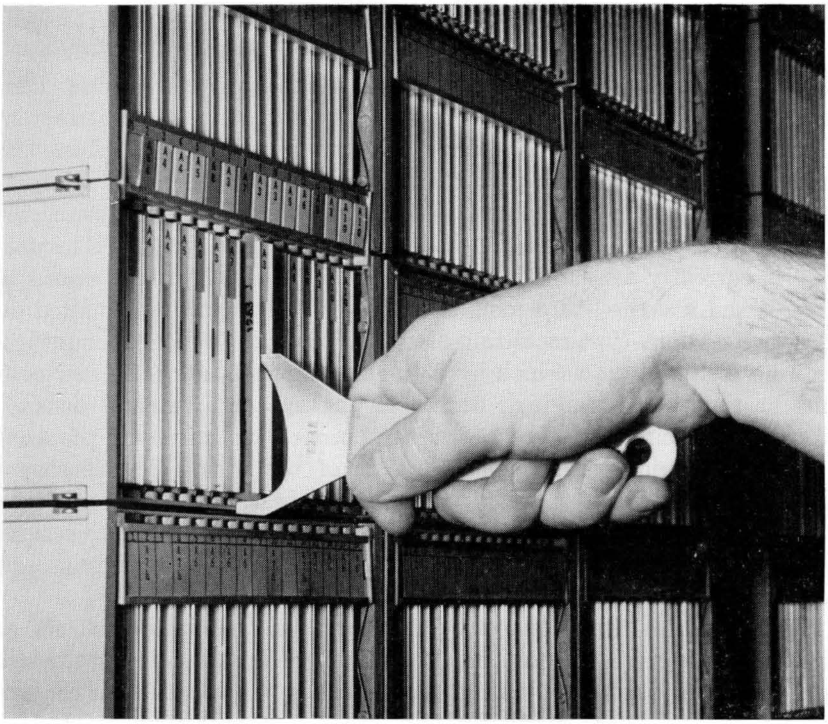

Fig. 6 — Circuit pack extractor tool.

color on both the designation strip and the package identifier. This method should provide adequate and reasonable safeguards against incorrect package insertion. The ultimate would of course be a mechanical coding scheme which would accept the correct code of circuit pack at a given location and make it physically impossible to insert any of the other 150 existing codes. This method was rejected as being prohibitive from the standpoints of cost, mechanical complexity and space consumption.

V. EXTRACTOR TOOL

Because of the close spacing of most circuit packs, a special tool is generally necessary to remove them. The extractor tool is shown in Fig. 6. The top prong of the tool is hooked into a slot in the circuit pack identifier and the bottom prong is rested against the lower guide wall. The board can be removed easily and in a controlled fashion by rotating the tool about the bottom pivot point.

VI. DESIGN ADVANTAGES

The new connector is quite flexible in that it permits the circuit pack spacings in the mounting to be varied as required by component sizes or other considerations. Four-tenths of an inch is the minimum spacing, but any integral multiple of this value is also possible. The maximum circuit pack capacity of the mounting can also be changed simply by varying the lengths of the guide walls. The basic connector and the end plates need not be changed. Actually, the No. 1 ESS mounting is currently available in two forms, the 16-board version shown in Fig. 4 and a single-board mounting. Either version can be mounted on a 4-inch channel-type mounting plate. Three of the 16-board mountings can be mounted on a 4-inch by 25-inch mounting plate. The new connector thus permits a high degree of package and terminal density. Terminal spacings are realized which approach the minimum practical for wire-wrapped terminations. A view of the wiring field is shown in Fig. 7. Three rectangular projections appear on the base of the retainer where the terminals are separated for rivets. These projections are painted white to accentuate the division of the terminals into groups of 7 and aid the craftsman in identifying terminals.

The design of the connector minimizes the undesirable effects of manufacturing tolerances. The pretensioning feature permits the use of a relatively compliant spring, thus reducing the variation in contact forces due to board thickness and other manufacturing tolerances. The alignment keys and the reference surfaces which locate the contact spring and the printed wiring board are all on one molded part, the retainer. The relative locations of these surfaces is thus tool controlled. In addition, the contact assemblies are located in the mounting in the same slots that are used to guide the printed wiring boards.

A significant advantage is achieved by the fact that the springs are molded in phenolic for a length of approximately $\frac{5}{8}$ inch. This feature provides a high degree of mechanical independence between the contact and terminal ends of the spring. Terminal or wiring disturbances are not expected to affect contact stability.

The welded gold button has several important advantages over the alternative possibility of an electroplated gold contact spring. The button provides a relatively thick layer of gold at the exact spot where it is needed at a cost which is less than that of electroplated gold. The wear resistance is thus optimized. Also, the possibility of a porous, corrosion-prone contact surface is eliminated, at least insofar as the contact spring is concerned.

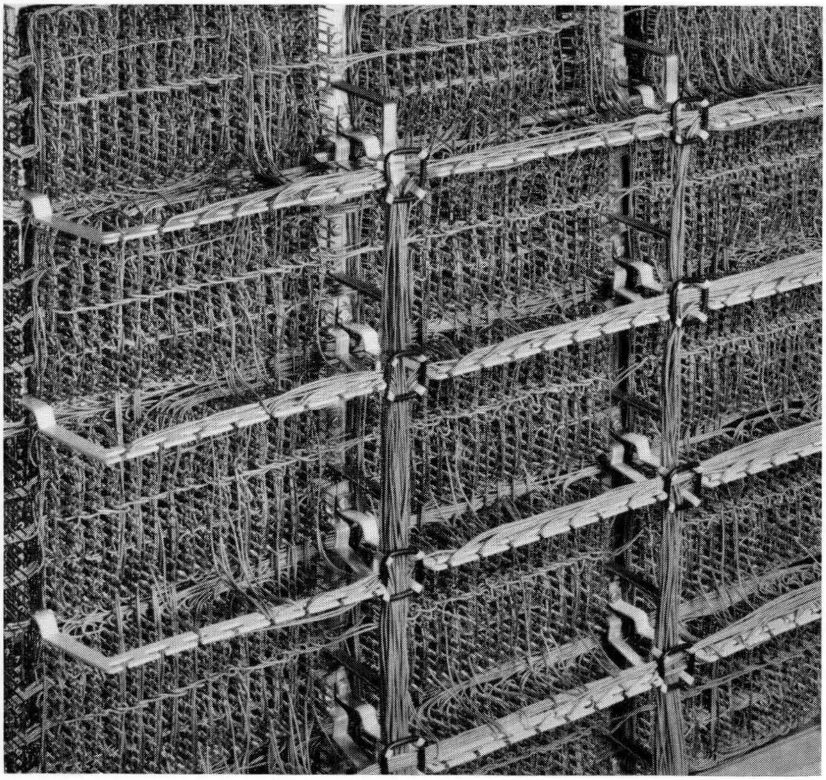

Fig. 7 — Connector wiring field.

The stepped contour which is machined on the back edge of the board facilitates board insertion. The contour delays the application of full contact force until the board fingers are well underneath the contact buttons. The buttons cannot wipe with appreciable force against the board insulation at the leading edge of the board fingers. There is thus no possibility of contaminating the contacts with wiped-on insulating material. This is a frequently overlooked source of contact contamination.

VII. TESTING PROGRAM

An extensive mechanical and electrical testing program was conducted to completely evaluate the performance of the connector.

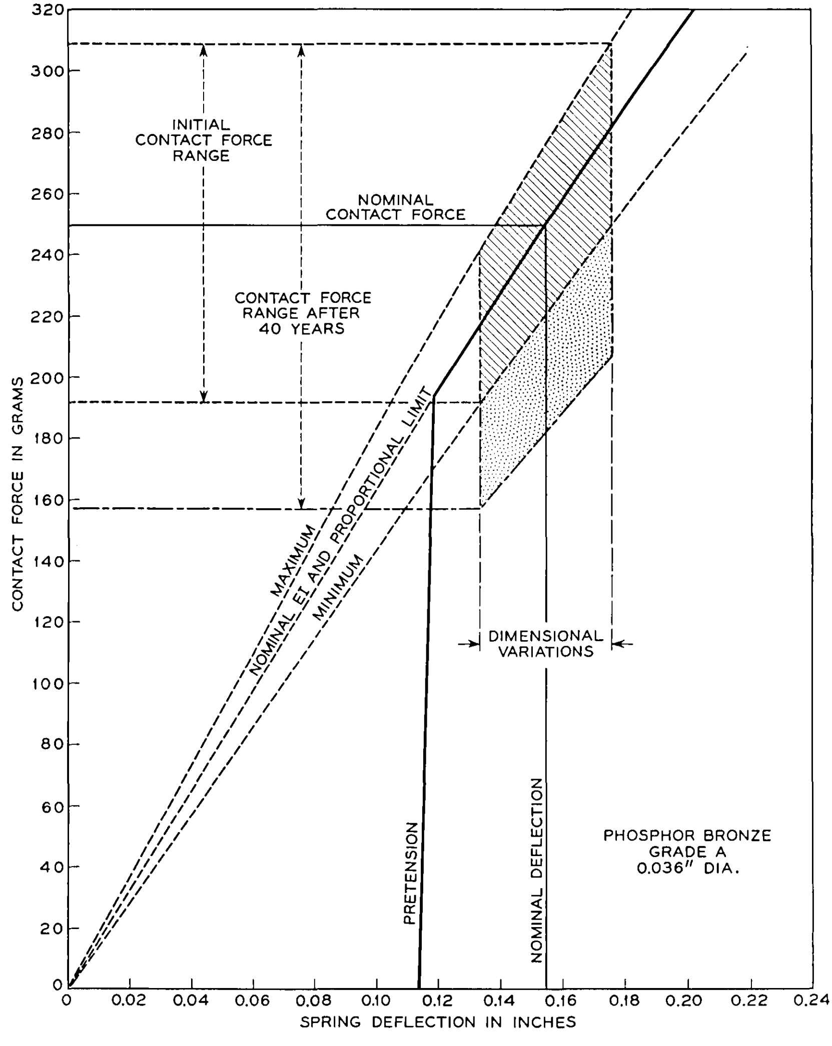

Fig. 8 — Connector spring characteristics.

7.1 *Mechanical Tests*

The force-deflection curve for the contact springs as obtained on the Instron Tester is shown in Fig. 8. Nominally, the springs are pretensioned with a force of 195 grams and will apply a contact force of 250 grams when an 0.093-inch thick board in inserted. There are many factors which can cause the contact force to assume a different value.

Variations in the spring properties of the wire or its size can, for a given deflection, appreciably affect the contact force. The extent of this effect is indicated by the maximum and minimum *EI* and proportional limit curves. The contact force will also be affected by dimensional variations in the molded connectors and the printed wiring boards. When all possible variations are considered and their effects accumulated arithmetically, the contact force is found to vary between 190 and 308 grams. These are initial values. There will be some degradation of the contact force with time, due principally to stress relaxation ot the phosphor bronze wire. Stress relaxation studies conducted on the contact springs have indicated that over a 40-year period the contact force may diminish by about 15 per cent. Thus the minimum contact force could diminish to 157 grams in the unlikely event that all of the possible variations assumed the maximum unfavorable values.

7.2 *Contact Finish Tests — Corrosion Resistance*

A considerable part of the testing activity was pointed toward establishing the preferred contact finish for the printed wiring boards and connector springs. Good corrosion resistance is essential. The connector will be expected to provide a high degree of electrical contact stability in all of the wide variety of environments in which it might be located. The contact finishes must also have sufficient wear resistance to withstand the number of contact wipes which could occur over a 40-year life. A wear life of 200 insertions and withdrawals was adopted as the design requirement for the board contact finish and 500 insertions and withdrawals for the contact finish of the connector.

The corrosion resistance of a number of contact finishes was evaluated in laboratory tests and in outdoor exposures at Columbus, Ohio, New York City, and Kure Beach, North Carolina. Tin, solder and 24-karat gold were the contact finishes investigated.

Tin and solder were included in the hope that one or both of them might prove to be a low-cost contact finish which would be suitable for use with the No. 1 ESS connector. Both are soft metals which form hard and brittle tarnish films. Generally such films are easily fractured by the application of a force sufficient to cause deformation of the underlying metal. It was felt that the relatively high forces of the ESS connector and the plowing action of wiping contacts would be sufficient to disrupt all tarnish films, so that clean metal-to-metal contact could be established. While this condition was essentially realized, there was one important side effect. The residue of disrupted tarnish films proved to be a source of contact contamination. This residue, composed of minute fragments of broken films, is created with each contact wipe in which a tarnish film is ruptured. With successive insertions in certain environments the debris can accumulate on the contact surfaces to the point where it interferes with metallic contact, thus causing high and unstable contact resistance. In environments of high humidity this point is reached in just a few insertions. On the basis of this behavior tin and solder were judged unacceptable for the ESS application. Gold, on the other hand, performed well in the environmental tests and satisfied the contact stability requirement in every respect.

The environmental tests established the advisability of restricting the circulation of air past the contacts. Contacts so protected were consistently less affected by corrosive atmospheres than unprotected contacts. When the circuit packs are spaced on 0.400-inch centers, the close spacing of the connectors affords sufficient protection against air circulation. For larger spacings, a cover is available which covers the open side of the connector and effectively restricts air flow past the contacts.

7.3 *Contact Finish Tests — Wear Resistance*

Although the corrosion resistance of 24-karat gold is excellent, its wear resistance was found to be quite poor. A 0.0001-inch thickness on the printed wiring board contacts would frequently be worn through in less than 10 insertions into the connector. Alloy golds with much better wear resistance are commercially available. These finishes are electrodeposited as alloys which generally contain less than 1 per cent of either cobalt or nickel. Their corrosion resistance is comparable to that of pure gold. A cobalt-gold alloy with a Knoop hardness of 160 proved to be the most suitable for the contact finish of the ESS circuit packs. A minimum thickness of 0.0001 inch is specified. The contact finish of the spring is provided by the pure gold overlay of the welded button.

With this finish combination the following type of contact wear occurs. As the soft gold button comes into contact with the hard gold board finish, cold welds will be established between the two surfaces at some of the several points of contact. These welded junctions will be broken and others established and subsequently broken as the two surfaces are wiped together. Some of the welds will be weak at the interface of the two contact metals and failure will occur there. Other welds will be strong at the interface and failure will occur sometimes within the bulk of the soft gold button and sometimes within the bulk of the board conductor copper. In the first case, where failure occurs within the gold, a fragment of the pure gold will be left welded to the hard gold finish on the board. When failure occurs within the copper conductor, a small fragment of the hard gold finish will be plucked out of the board and left welded to the button. In either case both contact surfaces are roughened and surface damage will progress rapidly with successive insertions. This welding and plucking type of surface damage is typical of that which generally occurs when soft metal is slid on a hard metal.

The amount of surface damage depends to a remarkable degree upon the type and thickness of the contaminant films which are on the contact surfaces. Certain films which form naturally, such as water vapor or adsorbed gas films, are inevitable on normal contact surfaces and can provide a surprising amount of lubrication. The degree of lubrication, however, is generally inadequate for the wear requirements of 200 cycles on the board and 500 cycles on the connector. Additional contact lubrication is necessary if these requirements are to be met consistently.

A contact lubricant, in addition to minimizing surface damage to the contact finishes, must not degrade the contact resistance. The lubricated surfaces must not be sticky or they will become contaminated with dust and other particulate matter. The lubricant must also stay on the contact surface where it is applied. It should not creep or migrate even in warm environments. Tests have established that these requirements are best satisfied for No. 1 ESS purposes with a thin film of one of the microcrystalline waxes. The lubricant is applied from a dilute trichloroethylene solution (0.5 per cent of wax by weight) to the contact surface of the board. It can be applied either by dipping or spraying.

VIII. CONCLUSIONS

It is concluded from the results of the testing program that the ESS connector in its present form will perform reliably for the 40-year design life. There were no indications that its performance would be improved by adding a contact-carrying plug unit to the board instead of using the board conductors as contact fingers. There was similarly no indication that the design should be modified to include contact bifurcation.

IX. ACKNOWLEDGMENTS

The developments described here represent the combined efforts of many people in Bell Telephone Laboratories and the Columbus Works of the Western Electric Company. The authors wish to express their appreciation for all these contributions. The outstanding work of a few should be given special recognition. The late J. H. Mogler made substantial contributions to the initial connector design, while J. A. Bachman and M. T. Skubiak have contributed significantly to the present design.

REFERENCES

1. Downing, R. W., Nowak, J. S., and Tuomenoksa, L. S., No. 1 ESS Maintenance Plan, B.S.T.J., this issue, p. 1961.
2. Cagle, W. B., Menne, R. S., Skinner, R. S., Staehler, R. E., and Underwood, M. D., No. 1 ESS Logic Circuits and Their Application to the Central Control, B.S.T.J., this issue, p. 2055.
3. Ferguson, J. G., Grutzner, W. E., Koehler, D. C., Skinner, R. S., Skubiak, M. T., and Wetherell, D. H., No. 1 ESS Apparatus and Equipment, B.S.T.J., this issue, p. 2355.

PROCESS III — A Compiler-Assembler for No. 1 ESS

By N. A. MARTELLOTTO, H. OEHRING and M. C. PAULL

(Manuscript received January 20, 1964)

A description of a compiler-assembler program named PROCESS III is given. This program is used to translate No. 1 ESS symbolic source programs to No. 1 ESS binary object programs. Included is a discussion of the PROCESS language, the Compool and macro facilities of the compiler, and some requirements that motivated its design.

I. INTRODUCTION

No. 1 ESS is a stored-program control telephone switching system.[1,2,3] The program consists of more than 100,000 instructions, each 44 bits in length, made up of 37 information bits and 7 check bits. To write such a program in binary (or octal) machine language is clearly impractical. To efficiently produce such large programs, modern techniques include the use of mnemonics or a symbolic language by the programmer. We say the programmer writes a *source* program in some kind of symbolic language, whereas the central control[2] executes an *object* program in its machine (binary) language.

This article mainly describes the vehicle that translates No. 1 ESS source programs to No. 1 ESS object programs. Certain other items explain the progress of a No. 1 ESS program from inception as a source program to its final state as an object program.

The vehicle developed for translating from No. 1 ESS source programs to No. 1 ESS object programs is itself a program; this program, named PROCESS III,* is executed on the IBM 7094 general-purpose computer. In keeping with the current usage for the words "compiler" and "assembler," PROCESS III is said to be a "compiler-assembler," since it performs both functions, as will be described. Consequently, in this article the words "compiler" and "assembler" are used interchangeably unless otherwise noted.

---

* PROCESS is an acronym for PROgram to Compile ESS programs.

1.1 *Background*

A compiler should come early in the development of a stored program system. The sooner one can translate to the object program, the sooner interpretive simulation may be undertaken; in turn, this means one may begin to feel confident sooner about such things as adequacy of order structure, and construction and size of the object program. PROCESS III was started early; although there were some definite ideas initially as to what some of its requirements would be, it was necessary to build a flexible structure to accommodate the many new requirements that would arise as the development of the No. 1 ESS program progressed.

Early in the development of No. 1 ESS, it was recognized that the object program would be large, and that it would be written, compiled, and tested in small sections of 1000 to 5000 instructions. Also known was the desirability of not having to disturb all parts of this large program in the semipermanent twistor memory when small sections were being tested and recompiled. Yet the sections had to communicate with each other and transfer control to each other. These considerations led to one basic design criterion for PROCESS III: while still insuring that communication and control among sections remain intact, it must be possible to recompile and reinsert sections of the total object program without disturbing the whole.

A more fundamental design criterion for the compiler arose from a lack of knowledge of the precise nature of the source program. It was known, of course, that the program was to do data processing in connection with telephone calls. Such actions are difficult to describe completely in a simple or mathematical or uniform way. That is to say, there did not exist a "telephone language" that could be used to describe completely the telephone data processing functions. However, it was known that some telephone functions are amenable to simple, mathematical, uniform description; furthermore, as learning took place, it was hoped that the balance of the telephone functions could in time be described in a straightforward manner. Thus, a fundamental design criterion for PROCESS III became flexibility: not only must the compiler be able to handle known straightforward descriptions of telephone functions, but it must also be capable of being used to construct, accept, and retain new descriptions of telephone functions.

The requirements of independent compilation, integrity of communication among sections of object programs, and flexibility have been met by PROCESS III because it:

(1) normally produces relocatable object programs,

(2) has a communications pool (Compool) facility, and

(3) has a powerful macro facility.

A relocatable object program has each of its instructions assigned an address relative to zero, the address of its first instruction. The address field of each No. 1 ESS instruction in a given program section P may in turn refer to one of four kinds of numbers:

(a) constants; these are said to be absolute numbers, since they will not be altered by subsequent processing;

(b) a local program point, in which case the number is a relocatable address within the range of the object program instruction addresses of P;

(c) a global program point, in which case the number is a pseudo-address that refers to a program other than P and therefore cannot be assigned explicity at the time P is compiled; and

(d) fixed call store or program store locations; these numbers are absolute addresses outside the program P but within the range of the two memories.

The total No. 1 ESS object program consists of many relocatable sections like P. Each section contains various numbers, as described. An immediate need for proper execution of the total object program by central control is a loading scheme for inserting this program into the twistor program store. The scheme is implemented by another IBM 7094 program called a "loader." The loader accepts as inputs many object programs generated by PROCESS III and produces as output a single unified (linked) object program containing only absolute addresses. Thus, having determined where sections of the object program will reside in the twistor store, the relocatable program points of (b) and the pseudo-addresses of (c) are changed by the loader to absolute addresses. The absolute numbers of (a) and (d) are not altered. The loader also has the ability to accept a more current version of a section (or sections) of the object program without disturbing the remaining sections. This means that fewer twistor cards need to be remagnetized during the checkout and debugging phases. Finally, the loader will generate and prefix 7 check bits to each 37-bit instruction. Since the Hamming code for these bits is a function of the 37 information bits *and* the absolute address at which the 37 bits reside in the twistor store, they cannot be generated prior to load time.

The Compool facility of PROCESS III enables one to refer conveniently to addresses of type (d). A major consideration in the design of the total object program is the temporary (call store) memory configuration. Temporary memory must be assigned to the call registers, the network map, various queues, and so on.[3,4] Since there are many programmers involved in constructing the large No. 1 ESS object program, it is efficient to centralize the assignment of temporary memory. The Compool of PROCESS III provides this centralization. Having once defined call store areas in the Compool, the many individual programmers need not concern themselves about such areas except to refer to them as necessary. In their programs, reference to these areas must be made symbolically, but there is no need for individual definition of such areas; the communications problem among programmers using the same call store areas is thereby substantially reduced by the Compool facility.

The Compool, therefore, is a collection of symbols that are assigned call store addresses; these symbols correspond to areas set aside in memory in a particular configuration for the purpose of doing telephone data processing. Of course, the configuration may change as the development of the object program progresses. In this case, PROCESS III is used to update the Compool, and the new configuration is used in compiling all source programs thereafter. It may be necessary for source programs to be recompiled, depending on the change in call store configuration. This too is partially automated: when a Compool run (i.e., a change in call store configuration) is made, PROCESS III refers to its "bookkeeping file" to ascertain which source programs, if any, need to be recompiled. A list is printed out and the individual programmers are notified. They need only recompile without concerning themselves as to precisely what call store changes have been made.

It was mentioned that PROCESS III has a powerful macro facility. In this context, a macro is defined to be a fixed amount of code, in some language, that will result in a variable amount of object program when it is properly "called." Just as basic instructions have variable fields (e.g., address, index, masking),[2] so do macros; in the case of macros, the variable fields are called "parameters." Since calls occur in the source program, the names of the macros, or more simply the macros, are said to be part of the source language. If one is given the ability to define his own macros he may thereby extend the source language. A set of macros which has been incorporated permanently into PROCESS III constitutes just such an extension. These permanent macros are saved as a special part of the Compool so that they may be refined and extended still further as more is learned about telephone data processing functions. In addition, individual programmers may define and call their own macros.

The balance of this paper is devoted primarily to three things:

(1) an explanation of how call store configurations are defined,
(2) a description of the source language and some of its extensions, and
(3) a discussion of the tools available to construct extensions to the source language.

II. STORAGE ALLOCATION

The design of the compiler was influenced by the real-time and space-limited nature of the resulting object program on the one hand, and the demands of an intricate basic machine order structure on the other. An obvious solution to the space problem was to pack information into subunits smaller than the natural dimensions of the available memory units (37 binary bits in the program store and 23 bits in the call store). Thus it was desirable to provide means in the compiler for naming such subunits, called "items," in memory.

The object program organization[3] itself demanded of the compiler the ability to define several types of homogeneous blocks of temporary memory, each composed of several basic memory units. A group of call registers[3,4] is essentially a group of similar blocks of memory, where each word within one block serves the same functions as the corresponding word in all the other blocks. For example, the high-order bit of the second word in each block may indicate whether this call register is controlling a telephone call or not. Memory blocks of this call register type are called "scatter tables" and are defined in PROCESS III by the following statement:

```
(1)  XX        SCATABLE    N1,N2
```

Beginning at an address called XX, statement (1) reserves space in memory for N1 tables each containing N2 words.

The statement,

```
(2)  YY        TABLE       N1,N2
```

defines N1 tables each containing N2 words. Memory defined with TABLE differs from that defined with SCATABLE; all the words in any one of the N1 tables defined with TABLE have the same function, but the function may vary from table to table. For example, with N1 = 2, the rightmost 17 bits of each word in the first table might be used to store the line equipment number, while the second table might consist entirely of trunk equipment numbers in the rightmost 15 bits.

It is also convenient to be able to define one continuous block of storage. The compiler accepts statements like:

```
(3)  ZZ      BLOCK      N
```

This reserves N words of space in memory and names the address of the first word ZZ.

In order to refer to memory items smaller than the basic word by name, one must be able to define them. The statements below serve this purpose:

```
(4)  YY      TABLE      10,50
(5)  YY0     LAYOUT     ABB------------CCCCCCCC
(6)  IT1     ITEM       A
(7)  IT2     ITEM       B
(8)  IT3     ITEM       C
```

Statement (5) lays out all 50 words of the first table in the set of 10 tables defined by (4) in the call store area. The high-order bit is defined as one item, the next 2 bits as a second item, the dashes indicate bits not being defined, and the rightmost 8 bits constitute a third item. Statements (6), (7), and (8) assign names to the three items.
Thus IT1 is the name assigned to the item indicated by A in the LAYOUT statement, IT2 is the name of the B item, and IT3 the name of the C item. In a similar way items may be defined for SCATABLE and BLOCK.

The following characteristics of items are useful in manipulating them, as will become obvious in the following sections.

A.ITEM = the address of the item
M.ITEM = the mask of the item; i.e., a 23-bit constant with all ones in the position of the item and zeroes elsewhere
D.ITEM = the displacement of the item from the right
S.ITEM = the size of the item; i.e., the number of bits contained in the item.

The qualifiers A., M., D., and S. are prefixed to the name of the item to refer to these characteristics. For example, the items defined in statements (6), (7), and (8) have the following characteristics:

A.IT1 = A.IT2 = A.IT3 = address named YY0
M.IT1 = O.20000000[*]

---

[*] PROCESS III assumes integers to be decimal unless qualified by O. to indicate they are octal.

M.IT2 = 0.14000000
M.IT3 = 0.377
D.IT1 = 22
D.IT2 = 20
D.IT3 = 0
S.IT1 = 1
S.IT2 = 2
S.IT3 = 8

III. SOURCE LANGUAGE

3.1 *Basic Orders*

Some of the storage allocation or storage defining facilities of PROCESS III were tailored for use by the No. 1 ESS basic orders. Since the nature and aims of the basic order structure have been discussed in some detail in an earlier article,[2] only some of their pertinent characteristics in connection with the use of item qualifiers are illustrated here.

```
(9)          MK          YY0
```

This instruction moves the 23-bit contents of the word named YY0 into the K register. The following instruction (10) does exactly the same thing:

```
(10)         MK          A.IT1
```

The triplet below [instruction (11)] sets the logic register to the mask of IT2, moves the contents of the item IT2 into the K register, masking out everything but the item by logical product (PL), and then right adjusts it in the K register by using the displacement of the item.

```
(11)         WL          M.IT2

             MK          A.IT2,,PL

             HC          D.IT2
```

The same actions are accomplished in a different way by the next three instructions:

```
(12)         WX          A.IT2

             MK          M.IT2,X,PS

             HC          D.IT2
```

Because of the PS option the mask is set up and used in the same order.

Given a source program input such as the basic order instructions in (9), (10), (11), or (12), PROCESS III will produce an object program as output with the property that for each input instruction there will be exactly one output instruction. This one-to-one correspondence between input source program instructions and output object program instructions defines an assembling process. On the other hand, a compiling process is defined to be a one-to-many correspondence between input source program "instructions" and output object program instructions. For a compiler the input "instructions" are called "statements," and the set of all statements meaningful to the compiler is called a "language." PROCESS III will accept as inputs basic order instructions and statements of its own language, called PROCESS, in any mixture.* The source language of No. 1 ESS programs, therefore, is nominally PROCESS plus the basic order instructions. It will be shown that the PROCESS language can be extended.

3.2 *PROCESS Language*

The basic goal of the PROCESS language is to provide the No. 1 ESS programmer with a means to write his source programs quickly and efficiently. As with any higher-level programming language, a program written in PROCESS cannot be better in terms of object program length than the same program written with basic orders by an *expert programmer*. When used properly, however, the PROCESS language gives object programs that are no worse than the great majority of those written with basic orders by average programmers.

The PROCESS language is intended to provide the fundamental programming tools needed to write telephone programs. The functions required in any program, including telephone programs, can be classified into three categories:

(1) moving data from one place to another,
(2) making decisions using these data, and
(3) performing arithmetic or logic operations on these data.

While these requirements were predetermined, there were some additional telephone-oriented programming problems that evolved as the programming effort got under way. These problems were solved readily because of the flexible macro facility of PROCESS III and the resulting ease in extending the source language by defining new procedures.

Essentially, the PROCESS language consists of a set of procedures

---

* Hence the designation of PROCESS III as a "compiler-assembler."

that can be called by the programmer with varying input information, called "parameters." A description of the allowable parameters and procedures follows.

The nature of parameters may be discussed on two levels:

(*i*) On the lower level, parameters can assume the identity of any of the basic units of data handled by the basic orders. The various possibilities are:

(a) full memory words, indexed or not
(b) items or partial words, indexed or not
(c) constants
(d) central control registers.

For (a) and (b), indexing is specified by enclosing the address and index in parentheses, as (address, index).

(*ii*) Parameters can also assume a more general nature that enables a programmer to nest procedures. In this case a parameter can be represented by:

$$\mathrm{OP}(a_1, a_2, \cdots, a_n)$$

Here the operator OP of the parameter can be any of the basic procedures of the language or the character C; the use of C indicates that the body of the parameter $(\cdots)$ should be complemented. Each a_i again can be of the form $\mathrm{OP}(b_1, \cdots, b_m)$ or one of the forms defined by (a) through (d) above.

The general-purpose procedures of the PROCESS language are:

1. Data moving

$$\text{MOVE} \qquad \mathrm{OP}(x),b,c,d,\cdots$$

Function: Move the quantity specified by x to the destinations designated by b, c, d, and so on. If OP is a basic procedure, perform this operation on x before moving the result to b and c, etc.

2. Decision making

$$\text{(a)} \qquad \text{IF} \qquad \mathrm{OP}(x),(r_1, r_2, \cdots),\mathrm{OP}(b),(d_1, d_2, \cdots)$$

Function: If the quantity x or the result of the operation (if any) performed on x has the relation r_i to b or to the result of the operation (if any) performed on b, then control is transferred to a program location named d_i $(i = 1,2,3)$. The allowable relations r_i and their meanings are:

E = arithmetically equal
NE = arithmetically not equal

LE = arithmetically less than or equal to
GE = arithmetically greater than or equal to
L = arithmetically less than
G = arithmetically greater than
XE = logically equal
XU = logically unequal.

(b) COMP $\mathrm{OP}(x),r,(b_1, b_2, \cdots, b_n), (d_1, d_2, \cdots, d_n)$

Function: If the quantity x or the result of the operation performed on x has the relation r to b_i, program control is transferred to d_i $(i = 1, 2, \cdots, n)$.

(c) IFOR $\mathrm{OP}(x),r,(b_1, b_2, \cdots b_n),d$

Function: If the quantity x or the result of the operation performed on x has the relation r to any one of quantities b_i $(i = 1, \cdots, n)$, program control is transferred to d.

(d) IF $x,r,b,\mathrm{OP}_1(c_1),\cdots,\mathrm{OP}_n(c_n), \mathrm{ELSE}(\mathrm{OP}_{n+1}(c_{n+1}),\cdots,\mathrm{OP}_m(c_m))$

Function: If x has the relation r to the quantity b, then perform the procedures $\mathrm{OP}_1, \cdots, \mathrm{OP}_n$; if not, then do $\mathrm{OP}_{n+1}, \cdots, \mathrm{OP}_m$.

(e) IF $x,r,b,\mathrm{OP}_1(c_1),\cdots,\mathrm{OP}_n(c_n), \mathrm{ALSO}(\mathrm{OP}_{n+1}(c_{n+1}),\cdots,\mathrm{OP}_m(c_m))$

Function: If x has the relation r to the quantity b then perform the procedures $\mathrm{OP}_1, \cdots, \mathrm{OP}_n$; in any case then do the procedures $\mathrm{OP}_{n+1}, \cdots, \mathrm{OP}_m$.

3. Arithmetic and logic procedures

(a) SUM $\mathrm{OP}(x),\mathrm{OP}(y),b,c,\cdots$

(b) DIFF $\mathrm{OP}(x),\mathrm{OP}(y),b,c,\cdots$

(c) AND $\mathrm{OP}(x),\mathrm{OP}(y),b,c,\cdots$

(d) OR $\mathrm{OP}(x),\mathrm{OP}(y),b,c,\cdots$

(e) EXOR $\mathrm{OP}(x),\mathrm{OP}(y),b,c,\cdots$

Function: Perform the indicated operation on the parameters x and y after executing the function of the operators on x and y, if any, and put the result into b, c, etc.

4. Loop control

m LOOP i,f,c,v
⋮
m ENDLOOP

Function: These two statements control a loop that begins with the call of LOOP and ends with the call of ENDLOOP which specifies the same m (name) in the location field. i and f are the initial and final values of the loop variable. At the end of each pass through the loop, the loop variable is incremented by c. When this new value exceeds f, control passes to the next instruction outside the loop; otherwise control is transferred to the beginning of the loop. v specifies the loop variable to be used. If v is not specified, the central control register Z will be used as a loop variable. It is possible to nest loops within loops. If the same loop variable is specified for more than one loop, the value of that variable is saved and reset when entering and leaving another loop.

5. Initialization facility

INIT $b,c,\cdots$

Function: Place c and any following parameters into consecutive locations starting with the location specified by b.

6. Unconditional transfer of program control

GO*TO OP(x),$(b_1, b_2, \cdots, b_n)$

Function: At execution time, x or the result of the operation performed on x, if any, specifies a number i, and program control is transferred to b_i. If b_i is not specified, program control is transferred to x.

Some typical calls for these procedures are:

```
START  LOOP      1,10,1
       MOVE      (ITEM,X),FULL
       IF        (ITEM,Y),E,0,DEST
       IF        (0,Y),E,L,MOVE(0,(0,Y)),
                   ELSE(MOVE(L,(0,Y)))
DEST   SUM       SUM(1,(ITEM,X)),K,(0,Z)
START  ENDLOOP
       GO*TO     SUM(Y,(ITEM,Z)),(D1,D2,D3)
```

The procedures described constitute the initial general-purpose subset of the PROCESS language. A realistic example showing the use of many of these procedures is given in Appendix A.1.

As the needs of the No. 1 ESS program became clearer, special telephone-oriented procedures were added to this initial set to extend the source language. For instance there are procedures to implement a change in network (CIN), a change in peripheral circuit configuration (CIC) or signal distributor (SD) actions. These procedures have enabled the programmer to implement such functions in a higher-level and more descriptive language, thereby relieving him of details involved in writing source programs at the basic order level.

Procedures in the PROCESS language are in fact macro calls. The corresponding macro definitions for the language are retained by the compiler in its Compool. To extend the source language, one defines new macros. The extensions may be global or local. Global extensions to the source language are macros that have proven to be of widespread use among the programmers; these are entered into the Compool and become part of the PROCESS language, capable of being used thereafter by all programmers. Local extensions to the language are macros that are defined and called by individual programmers in their own programs. Obviously, there may be many different kinds of local extensions to the source language. Extensions, whether global or local, are constructed using special macro orders in the macro definitions.

IV. MACRO DEFINITIONS

Each macro definition is associated with a definite name (or set of names) called a "macro name." When the compiler encounters a macro name in the operation field of the source program it looks for the definition associated with that name. The compiler then executes the orders in the macro definition, which results generally in No. 1 ESS code being generated. This code varies, depending on the parameters of the macro call.

A macro definition has the form:

DEFIN op_1 $\mathrm{dum}_1, \mathrm{dum}_2, \cdots, \mathrm{dum}_n$

order_1

order_2

$\vdots$

order_k

ENDEF

EQUAL op_1 $\mathrm{op}_2, \mathrm{op}_3, \cdots, \mathrm{op}_n$

$\mathrm{op}_1, \mathrm{op}_2, \mathrm{op}_3, \cdots, \mathrm{op}_n$ are all names of this definition. $\mathrm{dum}_1, \mathrm{dum}_2, \cdots, \mathrm{dum}_n$ are dummy parameters. The body of the definition consists of the series of orders: $\mathrm{order}_1, \mathrm{order}_2, \cdots, \mathrm{order}_k$. These orders are of four types: No. 1 ESS instructions, macro calls, macro orders, and pseudo operations. The macro orders are a special subset of the PROCESS language useful mainly in writing macro definitions. They instruct the compiler to take certain actions *during compile time.* To help distinguish macro orders from other types of orders, the symbol $*$ is the first character of each macro order name. The meaning and syntax of the four order types are discussed more fully in this and succeeding sections.

The actual notation used by programmers in writing macro definitions is limited by available keypunch symbols, which leads to awkward notation in some cases; for these cases a notation more suitable for exposition is used here. As previously, the remainder of this section uses small letters for variables, whereas capitals and special symbols such as $ are used literally. A detailed example of a macro definition, a macro call, and the operation of the compiler in expanding the definition is given in Appendix A.2.

4.1 *Parameter References*

Depending on the exact nature of a macro call, different codes are generated by its macro definition. In order to express this dependence of the code to be generated on the various parts of the macro call, a general scheme for referring to these parts is needed. The form of a macro call is:

loc op $p_2, p_3, \cdots, p_n$

A call is composed of a location (also called p_0), an operation (also called p_1) and a series of parameters. Syntactically, the location and operation are strings of six or fewer alphanumerics. The parameters, on the other hand, may have some internal structure. A parameter p_s is either a string of alphanumerics (including the null string) or it has the form $o_s(p_{s,1}, p_{s,2}, \cdots, p_{s,n_s})$ in which s is an ordered set of (position) integers, and o_s is any string of alphanumerics. An o_s is called the *operator* of parameter p_s. p_s with o_s removed is called the *body* of p_s. The *strip* of p_s is the body of p_s with the outside parenthesis removed. The *remainder* of p_s is defined only for $s = 2, 3, \cdots, n$. The remainder of p_s

is p_s , p_{s+1} , $\cdots$, p_n . The location, operation, and the parameter parts, operator, body, strip, and remainder of any p_s may all be referred to directly within a PROCESS III macro definition.

There are two methods to refer to parameters and parameter parts. The first method is by using "parameter indices." There are six "parameter indices" named I0,$\cdots$,I5 for use in writing macro definitions. A parameter index may be set to any parameter by the macro order *SET. For example:

*SET x,I0,s

This order sets parameter index I0 to parameter p_s if it exists; otherwise control jumps forward to location x in the macro definition. There is a companion macro order *ADV. For example:

*ADV x,I0,t

Assuming t is an integer and I0 is originally set to p_s , where $s = s_1 , j$, then this order will set I0 to $p_{s_1,(j+t)}$ if such a parameter exists, and control passes to the next order; otherwise control jumps forward to location x in the macro. For example, if I0 is set to $p_{2,1}$ and $t = 1$, then after a successful *ADV, I0 is set to $p_{2,2}$.

One may refer to the parameter part to which a parameter index is set as follows: assume Ij is set to p_s

"*O""Ij" refers to the operator of p_s .
"Ij" refers to the body of p_s
"*S""Ij" refers to the strip of p_s
"*R""Ij" refers to the remainder of p_s .

The second method allows one to refer to parameters p_1 , p_2 , $\cdots$ p_n and their respective parts directly by referring to the dummy parameters written on the DEFIN statement. The DEFIN statement has the form:

DEFIN op dum$_2$,$\cdots$dum$_j$,$\cdots$,dum$_n$

dum$_j$ may be any string of six or fewer alphanumerics. In writing the macro definition following a DEFIN statement, one may refer to parameters and their parts as follows:

"LOC" refers to p_0
"ZOP" refers to p_1
"*O""dum$_j$" refers to the operator of p_j
"dum$_j$" refers to the body of p_j

"*S""dum$_j$" refers to the strip of p_j
"*R""dum$_j$" refers to the remainder of p_j.

If by using an expression available for referring to parameters one refers to a parameter that does not exist, then that expression refers to the symbols MSP (missing parameter).

All the above ways of referring to parameters are called parameter references ⟨pr⟩. Parameter references can be concatenated with each other and can be concatenated with alphanumerics. (Alphanumerics exclude special symbols.)

† A concatenated parameter reference ⟨cpr⟩ is defined to be of the form:

$$x \text{ or } \langle \text{pr} \rangle \text{ or } \langle \text{cpr} \rangle \langle \text{cpr} \rangle^*$$

in which x is any string of alphanumerics.

† A ⟨pr⟩ refers to a parameter. A string of alphanumerics x refers to x. A concatenation of x's and ⟨pr⟩'s refers to the concatenation of the symbols to which the x's and ⟨pr⟩'s refer (referents). Generally, the concatenation of any set of expressions refers to the concatenation of the referents of the individual expressions.

4.2 *Numerical Indexing*

There are three "numerical indices," M0,M1,M2, available for use in writing macro definitions. These indices refer to numbers. A numerical index may be set to a number with the macro order *SFI. For example:

*SFI x,M0,n_1,n_2

This sets index M0 to n_1 with a limit of n_2, where both n_1 and n_2 are positive integers. If $n_2 < n_1$, the index will not be set and a jump forward to x will be executed. There is an associated macro order *AFI. It is written:

*AFI x,M0,n

If M0 is set to j when this order is encountered, then M0 will be set to $j + n$ provided $j + n$ does not exceed the limit established on the last *SFI order that referred to M0, and control jumps back to location x in the macro; otherwise control passes to the next order.

---

* This recursive definition states that an x or a ⟨pr⟩ is a ⟨cpr⟩ and that any concatenation of ⟨cpr⟩'s is also a ⟨cpr⟩.

† This and any paragraphs similarly marked may be omitted without loss in continuity by those not interested in the detailed syntax of macro definitions.

One may refer to the number to which a numerical index Mj refers by the expression "Mj".

† ⟨cnr⟩ is defined to be a concatenation of numerical index references. A ⟨cmr⟩ is defined to be of the form:

⟨cnr⟩ or ⟨cpr⟩ or ⟨cmr⟩⟨cmr⟩

⟨cmr⟩ in itself is not significant; it is used as a convenience in a definition given below.

4.3 *Naming Symbol Strings and Parts of Symbol Strings*

A string of alphanumerics may be named and later referred to by this name. Also, space must be allocated to hold the strings to which the name refers. One method of naming strings and at the same time allocating space is accomplished outside all macro definitions with the NAME statement:

```
NAME    nam           siz,strg
```

nam is the name of the string, siz is the maximum-length string to which this name refers, and strg is an initial string of symbols to which nam refers. The name of a string is limited to six characters.

A method of renaming strings is with the macro order *ST. For example,

```
*ST          s,p
```

gives the string *s* the name *p* previously assigned by a NAME statement. Later the string *s* may be referred to by writing [*p*].

† A string reference ⟨sr⟩ is defined to be of the form [⟨nr⟩] in which ⟨nr⟩ is defined to be of the form:

⟨cmr⟩ or ⟨sr⟩ or ⟨cmr⟩⟨sr⟩ or ⟨sr⟩⟨cmr⟩

An ⟨sr⟩ of form [⟨nr⟩] refers to the string whose name is the referent of ⟨nr⟩ as defined by using the NAME or *ST statements. If the referent of ⟨nr⟩ is not such a name, then [⟨nr⟩] refers to UN (undefined name).

4.4 *Special Functions*

Since it is expected that the parameters of a macro call will in many instances be the names of temporary storage elements such as items, registers, full words, and so on, means are provided for referring to properties of storage elements. These properties are:

(1) Type: [T.⟨nr⟩] refers to different characters, depending on what ⟨nr⟩ refers to.

If ⟨nr⟩ refers to:	[T. ⟨nr⟩] refers to:
an item	S
a full word	F
a number	W
a register item	P
a register	R
none of the above	UN

(2) Item properties: if ⟨nr⟩ refers to an item, then [S.⟨nr⟩], [D.⟨nr⟩], [M.⟨nr⟩], refer respectively to the size, displacement and mask of this item. If ⟨nr⟩ is not an item all three expressions refer to UN.

4.5 *Reference Expressions*

† A reference expression is a basic element in writing macro definitions. Recalling the various allowable bracketed expressions (i.e., [⟨nr⟩], [T.⟨nr⟩], [S.⟨nr⟩], [D.⟨nr⟩], [M.⟨nr⟩]), let ⟨csr⟩ be any concatenation of these, or null. A reference expression ⟨r⟩ is defined as any concatenation of ⟨nr⟩'s and ⟨csr⟩'s. ⟨r⟩ is of the form:

$$\langle\mathrm{nr}\rangle \text{ or } \langle\mathrm{csr}\rangle \text{ or } \langle\mathrm{r}\rangle\langle\mathrm{r}\rangle$$

† A legitimate reference expression always refers to some string of symbols. The interpretation of this string of symbols in turn depends on its position within the macro string.

4.6 *Conditional*

It has been shown how one can refer to parameters and various functions of parameters. Any such reference has been called a "reference expression," and has been symbolized by ⟨r⟩. The problem now is to produce code that depends upon these parameter functions. To do this some way of specifying decisions is required. The conditional is provided for this purpose.

One of the forms of the conditional is:

$$\$c,\ q_1\ ,\ q_2\ ,\ n_1\ ,\ n_2\$$$

Syntactically, c, q_1, q_2, n_1, n_2 are all of the form ⟨r⟩. A legitimate c refers to the letters C, E, G, or L and indicates the type of comparison to be made. q_1 and q_2 refer either to strings of symbols or numbers that are to be compared depending on the interpretation of c. n_1 and n_2 refer to numbers that indicate how many characters following the conditional (after the second \$) are to be omitted: n_1 characters if the condition is met, n_2 characters if the condition is not met. For the condition indicated by the letter C, the compiler compares the two strings referred to by q_1 and q_2 for identity. For the conditions indicated by the letters E, G, and L the compiler compares the two numbers referred to by q_1 and q_2 to determine if q_1 is respectively equal to, greater than, or less than q_2.

Another conditional is of the form:

$$\$\mathrm{X}, p, n_1, n_2\$$$

Syntactically, n_1 and n_2 are ⟨r⟩'s, but p must be a parameter reference ⟨pr⟩. The interpretation of this conditional by the compiler is: if the parameter referred to by p exists, omit the next n_1 characters; if not, omit the next n_2 characters (after the second $).

Finally there is:

$$\$\mathrm{U},n\$$$

which means "omit the next n characters." n is of the form ⟨r⟩.

In general, conditionals may be concatenated with each other and with reference expressions.

4.7 *Form of Orders Used in Writing Macros*

A macro definition is composed of a series of orders. The form of these orders is:

loc op_1 $p_2, p_3, \cdots, p_n$

or

loc * $\mathrm{op}_2, p_2, p_3, \cdots, p_n$

loc is an ⟨r⟩ consisting of six or fewer characters; op_1 is any concatenation of ⟨r⟩'s and conditionals totaling six or fewer characters in length. Since six characters do not allow many ⟨r⟩'s or conditionals for op_1, the second form is available, in which op_2 is the same as op_1 except there is no limit on its length. A parameter p is either a concatenation of ⟨r⟩'s and conditionals or of the form $\mathrm{op}(p,p,\cdots,p)$.

Thus an order used in a macro consists of conditionals which must be performed, reference expressions which must be interpreted, and operations which must be performed. The compiler does these things in the following fixed sequence.

(1) The conditionals are performed in sequence from left to right. A conditional is performed by:

(a) first interpreting all ⟨r⟩'s in the conditional (substituting referents for references) and then,

(b) certain parts of the order are omitted, depending upon the kind of conditional and substituted referents.

(2) All ⟨r⟩'s in that part of the order which remains are now interpreted.

(3) The resulting order (called an interpreted order) is performed. The resulting order is one of four types:

(a) an ESS instruction in the format required of such an instruction. If the compiler arrives at one of these in a macro definition, the ESS instruction is made part of the compiled object program.

(b) a macro call of the form described in Section 4.1. If the compiler arrives at one of these it transfers control to the definition of this macro and begins executing the orders in that definition.

(c) a macro order. Some of these already have been described, namely, *SET, *ADV, *ST, *SFI, and *AFI. The remainder of the macro orders are described below.

(d) a pseudo operation. The compiler executes the pseudo operation just as though it had been part of the input source program (see Section 5.1).

4.8 *Additional Macro Orders*

The remaining macro orders are all jumps or skips of one sort or another. Let x be any string of six or fewer alphanumerics, n a number.

$$*\mathrm{J}\begin{pmatrix}\mathrm{F}\\ \mathrm{B}\end{pmatrix} \qquad x$$

means jump $\begin{pmatrix}\text{forward}\\ \text{back}\end{pmatrix}$ to the location x.

$$*\mathrm{JF} \qquad \mathrm{OUT}$$

means jump out of this macro definition.

$$*\mathrm{S}\begin{pmatrix}\mathrm{F}\\ \mathrm{B}\end{pmatrix} \qquad n$$

mean skip $\begin{pmatrix}\text{forward}\\ \text{back}\end{pmatrix}$ over n orders.

$$*\mathrm{X}\begin{pmatrix}\mathrm{F}\\ \mathrm{B}\end{pmatrix} \qquad x$$

means execute the order at location x $\begin{pmatrix}\text{forward}\\ \text{back}\end{pmatrix}$ of this execute order and then return to the order directly after this execute order.

In the case of the execute order, the location x must be in the same definition as the execute order. In the case of the jump or skip orders the transfer of control can be outside the macro in which the jump or skip occurs.

A jump forward to location x in the definition of a macro called MAC causes the compiler to look for x in MAC, forward of the *JF order. If x is not found in MAC, the compiler continues to look forward of where the call for MAC occurred. This process continues until the x is found or the end of the input program is reached. A jump back, *JB, is executed similarly, except that if PROCESS III gets back to the input source program without having found an x, it will not look any further; the compiler will then process the next order in the source program. The skip macro orders follow corresponding rules. A detailed example of how the compiler handles a macro call is given in Appendix A.2.

V. SOME RELATED DETAILS

There are many features of PROCESS III that have been omitted for the sake of brevity. However, a few details are mentioned below in an effort to complete the general facilities of the compiler.

5.1 *Pseudo Operations and Output Listing*

PROCESS III has a variety of pseudo operations. Pseudo operations are orders to the compiler that cause it either to generate data or to take some special action. Many of the special actions have to do with print control of the output listing. Two typical pseudo operations are:

```
OCT        1000007777777
SPACE      2
```

The first generates 37 bits of data consisting of the octal number shown; the second causes two blank lines to be "printed" on the output listing.

The output listing of the compiler is part of the documentation of the No. 1 ESS program. The listing contains the symbolic source program as written by the programmer, and also an octal representation of the object program. An example is shown in the Appendix, Section A.3.

5.2 *Machine Restrictions*

An interesting feature of PROCESS III is its ability to check for (and sometimes correct) certain violations in the source program. In addition to the usual checking performed by an assembler (e.g., undefined and multidefined symbols), PROCESS III checks for illegal sequences of basic order instructions. These sequences, usually couplets or triplets, are illegal because of timing restrictions of the No. 1 ESS central control. The compiler either flags the violations or inserts EE (no operation) instructions to correct the sequence.

5.3 *Input and Correction Features*

The input to PROCESS III may be either tape or cards; in the case of cards, two formats are available, symbolic or crunched. Symbolic card input means that there is a single basic instruction or order or procedure or pseudo operation per physical card; crunched card input is simply a compressed version of the symbolic information, so that more than one instruction is introduced per physical card. With crunched input every instruction in the source program is assigned a sequence number. These sequence numbers may be used by the programmer to modify his source program conveniently when he needs to recompile.

VI. SUMMARY AND CONCLUSION

A description of PROCESS III, a compiler-assembler for No. 1 ESS, has been given. The emphasis has been on the factors influencing the design of the compiler, the built-in PROCESS language and the facilities available for extending the source language.

The approach used in the design of the compiler has proved very useful, primarily because of the flexibility it has provided. Outstanding among the merits of this approach is the fact that there now exist several telephone-oriented procedures in a language understandable to programmers. This is not to say, however, that PROCESS III is the final answer to a "telephone language." The authors feel that it is accurate to say that PROCESS III has laid a solid foundation for a future PROCESS *n*.

VII. ACKNOWLEDGMENTS

To acknowledge all contributors to the design and implementation of a compiler at this late date would be very difficult. The art of designing compilers has matured considerably in recent years but not so dramatically that one can point to unique clear-cut breakthroughs. A new compiler is almost always a few new ideas mixed in with many old ones. So it is with PROCESS III. Thus the authors single out no specific articles in the literature — thanks are due to all workers in this field. We should like to mention, however, S. H. Unger, under whose direction a predecessor compiler was built; N. S. Friedman, who programmed the macro definition and executive routines; R. E. Archer, who programmed the Compool and loader facilities; and W. C. Jones, under whose direction some early work was done on PROCESS III.

APPENDIX

A.1 *Realistic Example of a Telephone Function and Its Program*[3,4]

The example shown in Fig. 1 is a realistic subprogram taken from the coin charge sequence of No. 1 ESS. It shows the application of the general-purpose procedures in programming telephone functions. It also demonstrates the usefulness of programmer-defined procedures such as LINK, which links two call registers, and SZREG A, which generates a program to hunt and reserve an idle call register specified by A. The accompanying flow chart (see Fig. 2) shows the close correspondence between the procedures of the PROCESS language and the telephone functions depicted on the sequence chart.

A.2 *Detailed Example of Macro Definition and Macro Call*

Definition of a macro named MV:

```
DEFIN   MV       A,B,C                           Order
        *SET     OUT,I0,2                           1
        MK       "*S" "A"                           2
XYZ     *ADV     OUT,I0,1                           3
        *SF      $C,[T."I0"],R,0,2 $ 2,0            4
        KM       "*S" "I0"                          5
        *JB      XYZ                                6
        W"I0"    0,K                                7
        *JB      XYZ                                8
ENDEF
```

Purpose: to move the contents of A to B to C, · · · . A may be an indexed or unindexed memory location. B may be an indexed or unindexed memory location or a register. Example: assume the macro call is

```
        MV       JACK,X,(JILL,Y)
```

where JACK and JILL are call store locations and X and Y are index registers.

Upon seeing this call, the compiler goes to the definition of MV. The steps taken by the compiler in expanding this macro call follow:

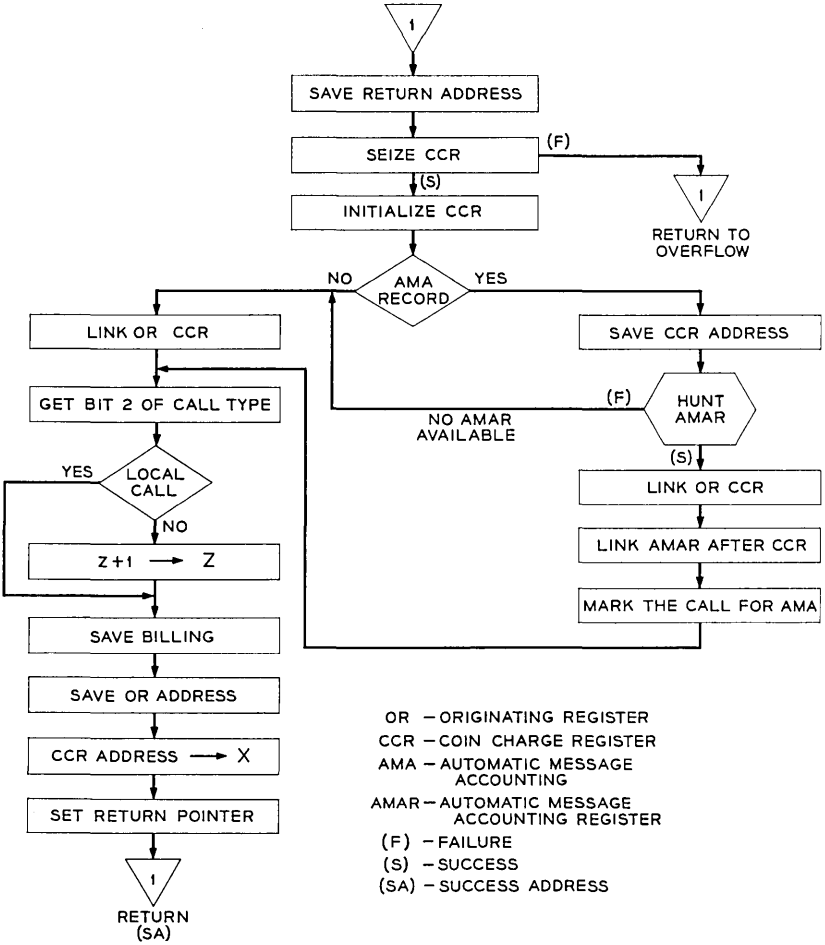

Fig. 1 — Subprogram from coin charge sequence.

(1) it sets I0 to JACK; (order 1)
(2) it produces:

MK JACK (order 2)

(3) it advances I0 to X; (order 3)
(4) it interprets the conditional,

$C,[T.X],R,0,2$

of order 4, which results in order 4 being interpreted as

*SF 2

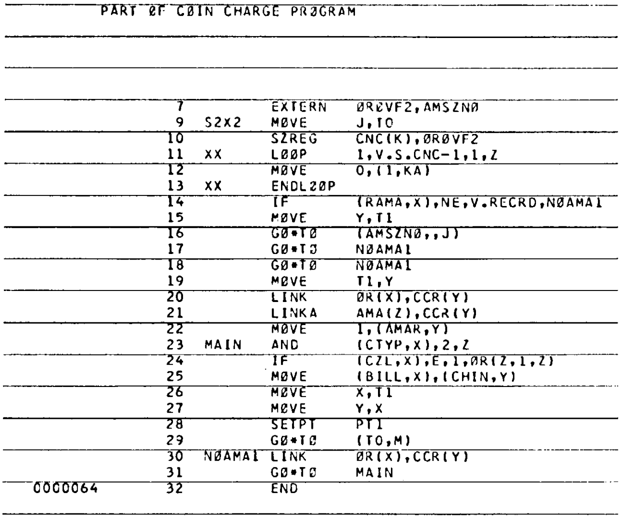

```
              PART ØF CØIN CHARGE PRØGRAM



                     7           EXTERN   ØRØVF2,AMSZNØ
                     9   S2X2    MØVE     J,TO
                    10           SZREG    CNC(K),ØRØVF2
                    11   XX      LØØP     1,V.S.CNC-1,1,Z
                    12           MØVE     O,(1,KA)
                    13   XX      ENDL2ØP
                    14           IF       (RAMA,X),NE,V.RECRD,NØAMA1
                    15           MØVE     Y,T1
                    16           GØ*TØ    (AMSZNØ,,J)
                    17           GØ*TØ    NØAMA1
                    18           GØ*TØ    NØAMA1
                    19           MØVE     T1,Y
                    20           LINK     ØR(X),CCR(Y)
                    21           LINKA    AMA(Z),CCR(Y)
                    22           MØVE     1,(AMAR,Y)
                    23   MAIN    AND      (CTYP,X),2,Z
                    24           IF       (CZL,X),E,1,ØR(Z,1,Z)
                    25           MØVE     (BILL,X),(CHIN,Y)
                    26           MØVE     X,T1
                    27           MØVE     Y,X
                    28           SETPT    PT1
                    29           GØ*TØ    (TO,M)
                    30   NØAMA1  LINK     ØR(X),CCR(Y)
                    31           GØ*TØ    MAIN
   0000064          32           END
```

Fig. 2 — Flow chart for sequence of Fig. 1.

(5) it arrives at order 7, which produces:

WX	0,K	

(6) it returns to order 3;	(order 8)
(7) it advances I0 to (JILL,Y);	(order 3)
(8) it interprets the conditional, finding that (JILL,X) is not a register and skips to order 5;	
(9) it produces:	

KM	JILL,Y	(order 5)

(10) it returns to order 3;	(order 6)
(11) it cannot advance I0 any further and therefore jumps out of the macro definition.	(order 3)

A.3 *Example of an Output Listing*

Fig. 3 is a typical output listing.

Starting on the extreme left, the interpretations of the columns are:

(1) relocatable locations assigned to the object program

(2) a three-character console code corresponding to the operation part of the instruction

(3) the 37-bit octal representation of the instruction

(4) sequence numbers: each statement in the source program has such a number

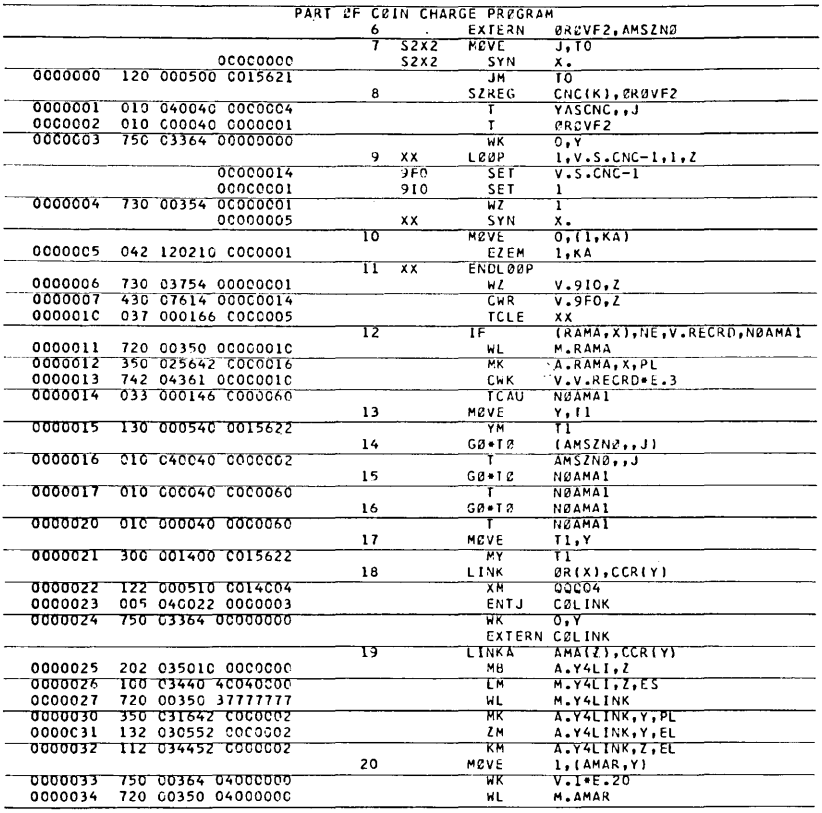

```
                                  PART ØF CØIN CHARGE PRØGRAM
                                         6     .    EXTERN   ØRØVF2,AMSZNØ
                                         7   S2X2   MØVE     J,T0
                         0C0C0000            S2X2     SYN    X.
   0000000   120  000500  C015621                     JM     T0
                                         8          SZREG    CNC(K),ØRØVF2
   0000001   010  04004C  00C0C04                     T      YASCNC,,J
   0000002   010  C00040  0000001                     T      ØRØVF2
   0000C03   75C  C3364   00000000                    WK     0,Y
                                         9    XX    LØØP     1,V.S.CNC-1,1,Z
                         0C000014             9F0     SET    V.S.CNC-1
                         000C0001             910     SET    1
   0000004   730  00354   0C000001                    WZ     1
                         0C000005             XX      SYN    X.
                                        10          MØVE     0,(1,KA)
   00000C5   042  12021C  C0C0001                     EZEM   1,KA
                                        11    XX    ENDLØØP
   0000006   730  03754   00000001                    WZ     V.910,Z
   0000007   43C  07614   000C0014                    CWR    V.9F0,Z
   000001C   037  000166  C0CC005                     TCLE   XX
                                        12          IF       (RAMA,X),NE,V.RECRD,NØAMA1
   0000011   720  00350   0C00001C                    WL     M.RAMA
   0000012   350  025642  C0C0016                     MK     A.RAMA,X,PL
   0000013   742  04361   0C0C001C                    CWK    V.V.RECRD*E.3
   0000014   033  000146  C00060                      TCAU   NØAMA1
                                        13          MØVE     Y,T1
   0000015   130  00054C  0015622                     YM     T1
                                        14          GØ*TØ    (AMSZNØ,,J)
   0000016   C1C  C40040  C000002                     T      AMSZNØ,,J
                                        15          GØ*TØ    NØAMA1
   0000017   010  C00040  C0C0060                     T      NØAMA1
                                        16          GØ*TØ    NØAMA1
   0000020   01C  000040  0000060                     T      NØAMA1
                                        17          MØVE     T1,Y
   0000021   300  001400  C015622                     MY     T1
                                        18          LINK     ØR(X),CCR(Y)
   0000022   122  000510  C014C04                     XM     00C04
   0000023   005  04C022  0000003                     ENTJ   CØLINK
   0000024   750  03364   0C000000                    WK     0,Y
                                                      EXTERN CØLINK
                                        19          LINKA    AMA(Z),CCR(Y)
   0000025   202  03501C  00C0C00                     MB     A.Y4LI,Z
   0000026   100  C3440   4C040C00                    LM     M.Y4LI,Z,ES
   0C00027   720  00350   37777777                    WL     M.Y4LINK
   0000030   350  C31642  C0C0C02                     MK     A.Y4LINK,Y,PL
   0000C31   132  030552  C0C0002                     ZM     A.Y4LINK,Y,EL
   0000032   112  034452  C000002                     KM     A.Y4LINK,Z,EL
                                        20          MØVE     1,(AMAR,Y)
   0000033   750  00364   04000000                    WK     V.1*E.20
   0000034   720  C0350   0400000C                    WL     M.AMAR
```

Fig. 3 — Typical output listing.

(5) source and object program symbolic statements: the indented statements were generated by the compiler and were not part of the source program.

REFERENCES

1. Keister, W., Ketchledge, R. W., and Vaughan, H. E., No. 1 ESS System Organization and Objectives, B.S.T.J., this issue, p. 1831.
2. Harr, J. A., Taylor, F. F., and Ulrich, W., Logical Organization of No. 1 ESS Central Processor, B.S.T.J., this issue, p. 1845.
3. Harr, J. A., Hoover, Mrs. E. S., and Smith, R. B., Organization of the No. 1 ESS Stored Program, B.S.T.J., this issue, p. 1923.
4. Carbaugh, D. H., Drew, G. G., Ghiron, H., and Hoover, Mrs. E. S., No. 1 ESS Call Processing, B.S.T.J., this issue, p. 2483.

No. 1 ESS Call Processing

By D. H. CARBAUGH, G. G. DREW, H. GHIRON
and MRS. E. S. HOOVER

(Manuscript received January 15, 1964)

A telephone call goes through six basic stages: (1) detection of a service request, (2) interpretation of the digits dialed, (3) alerting the called customer, (4) establishing a talking connection, (5) call disconnect, and (6) charging. The way in which programs, assisted by circuits and temporary memory, advance a call from one stage to another in No. 1 ESS is described in this article.

I. INTRODUCTION

As mentioned in the description of systems objectives[1] for the No. 1 electronic switching system (ESS), the problem posed to the designer of a switching system intended for the widest possible Bell System use becomes: to provide economical means for switching a wide range of traffic, composed of many types of calls, each differing in some degree from the next.

Previous solutions to this problem resulted in systems composed of a multiplicity of switches and relay circuits, each performing a certain set of functions. A call was processed by the proper set of circuits at the proper time. In the more modern systems, common control circuitry takes over the most complicated parts of the decision-making process. For example, the No. 5 crossbar system, as presently developed, is so versatile that it is able to offer a wide range of services.

In the No. 1 ESS the principle of the common control has been carried even further by the use of a stored program electronic data processor, which consists of a central control and associated electronic memories. Relay circuits, such as trunk and service circuits, are kept as simple as possible.[2] Many of the functions performed by the circuits in previous systems are performed by the central control under the direction of the stored program.

The logical organization of the central control was designed to take advantage of the speed inherent in electronics for processing large numbers of calls. The variety of services is provided by the use of the stored program. A wide range of new services can be offered in the future with a fairly modest development of new circuitry. To provide existing offices with these new features will require few wiring changes, but will require a change of program.

The No. 1 ESS programs, like all large programs, are divided into functional blocks of instructions. Some of these blocks of instructions can be called on by other blocks to perform some specific function, such as looking up translation data in memory. Some blocks are basically concerned with an efficient input-output procedure. Others constitute the "mainline" programs, which advance the progress of the call. In all cases, similar programming actions are grouped together as much as possible so that a single program will suffice for many variations.

Each block of program requires the use of a "notebook" in temporary memory (call store) in which to leave data in the course of processing the call. In many cases, these areas of memory must be assigned at the start of a call and be kept intact over a period which usually lasts as long as a particular phase of the call. By analogy to relay registers which perform the memory function in relay systems, these areas of the call store are referred to as "registers." In dividing the total program into blocks, it is necessary to associate specific areas of the call store with only a few programs so that the formats of these areas need only be known to a limited number of programs. The need to engineer or assign areas of call store for most of the memory functions puts certain restrictions on the way the program is divided.

Although the basic job of the central control is call processing, certain administrative tasks are a necessary concomitant, such as taking traffic measurements and accepting data from the teletypewriter printer concerning changes made in the class of service and directory numbers assigned to lines. The stringent requirements for reliability which have come to be expected of telephone service have resulted in extensive maintenance programs designed to detect and diagnose equipment failures. In order to process a high volume of telephone traffic, the call-processing programs are largely separated from the maintenance and administrative programs. At specific points in normal call processing, checks are made to determine whether the system has behaved as expected; if not, maintenance programs are called in to determine the reason. Routine maintenance and administration functions are fitted in at times which will not hamper the system's basic tasks of call processing.

In the following sections of this paper the manner in which the system supervises calls, receives and transmits signals, and connects calls in the switching network is described so that the program implementation can be more easily understood. The basic divisions of the call processing program are then outlined, and the corresponding organization of call store memory is described. Finally, a simple line-to-line call is traced to illustrate how the hardware, programs, and temporary memory are brought into play to process a typical call.

II. SUPERVISION AND SIGNALING

Each line has an appearance on a line link network.[3] Associated with each appearance is a line ferrod sensor,[4] which is used to detect the flow of line current when a telephone customer lifts his receiver to request service. Cutoff contacts of a ferreed switch remove the bridged windings of the ferrod sensor during signaling and conversation so that they will not impair transmission or limit signaling range. The line ferrod is the initial supervisory point for all line service requests, as shown in Fig. 1.

After a service request is detected, the line is connected to a digit receiver: a customer dial pulse receiver if the customer has a rotary dial on his telephone, a customer TOUCH-TONE receiver if the customer subscribes to TOUCH-TONE service. Either digit receiver provides dial tone to indicate that the system is ready to serve the request. In addition, the receiver is provided with facilities to test for crosses to foreign potentials which would simulate a service request, and to make a tip party test on two-party lines. The customer dial pulse receiver is capable of following subscriber dial pulses. The customer TOUCH-TONE receiver will both follow dial pulses and detect the presence of TOUCH-TONE signals. The digit receivers have appearances on trunk link networks. At the time a line is connected to a digit receiver, the

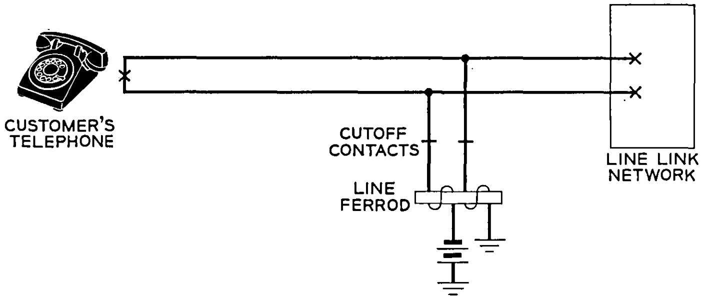

Fig. 1 — An idle customer line supervised at its line ferrod.

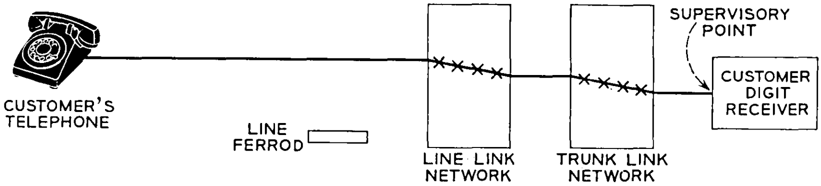

Fig. 2 — A line supervised at customer digit receiver during dialing.

cutoff contacts of the line ferrod are opened and supervision is transferred to the digit receiver, as shown in Fig. 2.

A line is supervised at a digit receiver until the completion of dialing, at which time the call will take one of many possible courses. If the requested number is in the same office, a ringing circuit will be utilized. If the requested number is busy, a connection to a busy tone circuit will be established. If the requested number is in another central office, an outgoing trunk and a digit transmitter will be brought into play. In the latter case, the supervision of the calling line normally remains at the digit receiver until the completion of outpulsing.

On an intraoffice call, audible ringing is supplied to the calling line by a tone circuit. The tone circuit provides audible tone and supervision of the calling line in order that a call abandonment during ringing may be detected.

Twenty-cycle ringing voltage is supplied through a small number of ringing circuits rather than through relays in the incoming or intraoffice trunk circuits, as in previous systems. Each ringing circuit has a trunk link network appearance and is connected to a called line only until the call is answered or is abandoned. Various line tests are made by the circuit. Power cross detection guards the ferreed crosspoints of the switching network and other circuits. A pretrip test guards against the possibility of falsely charging a calling customer, and a check is made that ringing current is flowing out toward the called phone. Three groups of ringing circuits are provided, one for each ringing phase, as shown in Fig. 3. The same is done for the audible tone circuits. When ringing is to be established, a connection to a ringing circuit in the active phase is made, providing virtually immediate ringing.

The ringing circuit is provided with a ring trip relay which stops the flow of ringing current as soon as the called customer answers. A scanner ferrod sensor provides the means by which a program detects the answer. Similarly, scanner ferrods are the means by which the results of the tests mentioned earlier are determined. The network connections and the points at which the calling and called lines are super-

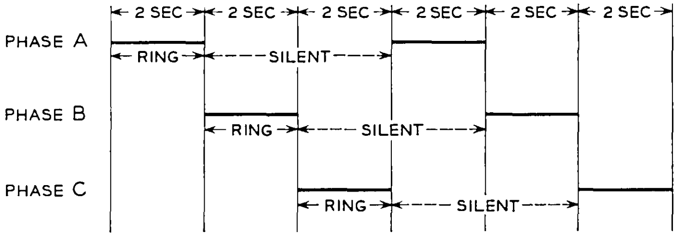

Fig. 3 — Three phases of ringing voltage provided for immediate ringing.

vised at this stage of an intraoffice call are shown in Fig. 4. At the time the ringing connection is established, the called customer's line ferrod is removed by opening its cutoff contacts.

On intraoffice calls, when customers are connected for talking, junctor circuits provide supervision and talking battery. Associated with each circuit are two scanner ferrod sensors, one to supervise each of the customers, as in Fig. 5. Bridged supervision is utilized and dc isolation is provided by the capacitor coupling used for speech transmission.

To summarize: the supervision of a calling line, during an intraoffice call, originates at its line ferrod, is transferred first to a digit receiver, then to an audible ringing tone circuit, and finally to one side of a junctor circuit. Abandonment of the call at any stage can be detected at one of these circuits. Similarly, the called line's supervision is removed from its line ferrod when a ringing connection is established and is transferred to the ringing circuit to detect answer. It is then transferred to the other side of the junctor circuit to detect its disconnect. Fig. 6 shows how supervision is passed from one circuit to another.

If the call destination is a customer in another central office, an outgoing trunk circuit to that office is selected and a digit transmitter is connected to the trunk circuit to transmit the called number. No. 1

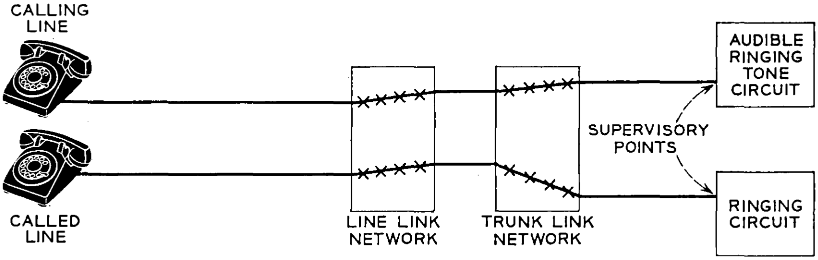

Fig. 4 — Supervision of calling and called lines during ringing.

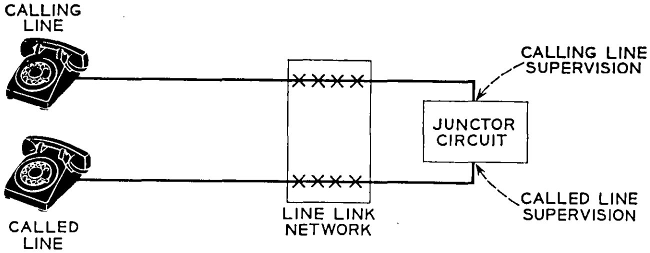

Fig 5.—Calling and called lines supervised at junctor circuit during talking.

ESS outgoing trunks are designed to provide: (1) supervision toward the calling line, (2) supervision toward the distant office, (3) speech transmission, (4) bypassing of all supervisory elements so that trunk tests can be made and pulsing can be performed by the transmitter, (5) compensation for different subscriber loop lengths, and (6) lightning surge protection.

Different types of digit transmitters are provided, to meet the needs of the offices which may be connected with No. 1 ESS. Dial pulse, multifrequency, revertive, and panel call indicator pulsing are available. Each transmitter, with an associated program, can test for the continuity and proper polarity of the trunks to which it connects, can detect start pulsing signals from a distant office, and can generate signals of the proper type.

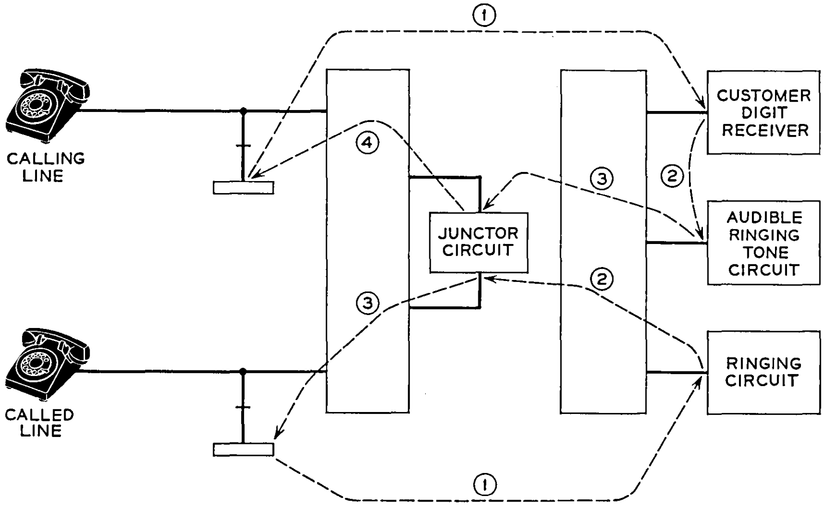

Fig. 6 — Transfer of supervisory points during an intraoffice call.

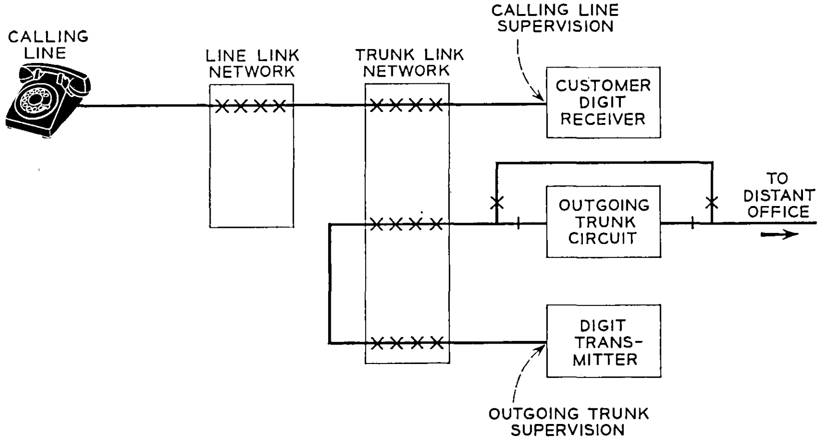

Fig. 7 — Supervision of an outgoing call during outpulsing.

Since a digit transmitter is connected to the selected outgoing trunk during the outpulsing stage of an outgoing call, the supervision of the calling line normally remains at the customer digit receiver until outpulsing is completed. Similarly, the outgoing trunk is supervised at the digit transmitter rather than in the trunk circuit. The network connections and supervisory points during outpulsing are shown in Fig. 7. After outpulsing, while ringing is being applied in the distant office, and during talking, the supervision of both the calling line and the trunk are at the trunk circuit, as shown in Fig. 8.

III. PROGRAMS INVOLVED IN CALL PROCESSING

In a program-controlled system such as No. 1 ESS, the circuits involved in advancing a call from one stage to another do not perform these actions by themselves. Control signals generated by programs

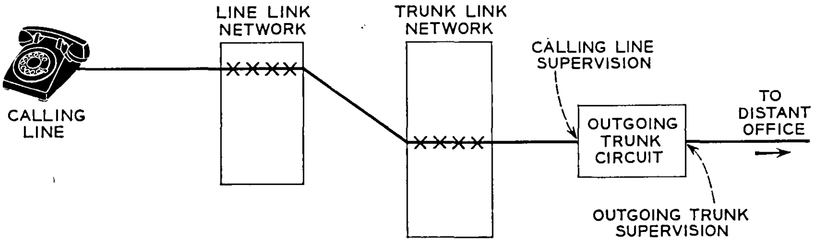

Fig. 8 — Supervision of an outgoing call during talking.

cause the circuits to change from one state to another. Similarly, control signals from the outside environment or changes in circuit states do not by themselves cause any system actions to take place. They activate scan points which are read and interpreted by programs. The programs determine the meanings of the scanner readings and perform the logic to decide what action should be taken.

The programs associated with call processing may be generally classified in three categories: (1) those which detect changes in the outside environment and constitute inputs to the ESS and those which produce changes in the outside world and constitute system outputs (these programs are referred to as input-output programs); (2) call control programs, which have only call-related purposes and whose function is to advance a call to completion; (3) programs of such a generally useful nature, which perform such a frequently used function, and which are sufficiently well defined that they may be considered to be service routines, used at will by call processing programs and others.

3.1 *Input-Output Programs*

3.1.1 *Input Programs*

The programs which detect system inputs are designed to be relatively simple, highly efficient programs which report changes or events to call control programs which analyze the report and perform any required actions. This is done because there is a very large number of inputs (scan points) to be interrogated regularly. The number of changes detected at any one time is expected to be quite small.

The program which detects line service requests interrogates all line ferrods in the office approximately ten times per second. The line scanners are arranged so that 16 line ferrod sensors are read simultaneously. The supervisory line scan program reports the origination to a call control program and continues its round of line scanner interrogation.

Another input program detects and counts dial pulses generated by customer dialing. It interrogates the scan points associated with the pulsing relays in customer dial pulse receivers 100 times per second. In addition to counting pulses, the program measures interdigital intervals and, when it determines that a string of dial pulses has ended, reports the count to a call control program which will determine whether any action should be taken. The program also performs two other auxiliary functions for which reports are made. One is to report when the first pulse of the first digit is detected, to tell the call control program that it is time to remove dial tone. The second is to perform permanent signal and partial dial timing. If no pulses are received for an interval of 16 to 32 seconds, the program reports this to the call control program, which will handle the call from that point on.

A third input program scans the ferrods controlled by ring trip relays in ringing circuits. This program is activated ten times per second by an executive control program.[5] When the called customer answers, it reports to a call control program, which removes the ringing connection and establishes a talking connection.

The supervisory scanning program of junctor circuits looks only for changes from off-hook to on-hook. A change of state of a junctor ferrod from off-hook to on-hook may be a momentary hit on the line or an inadvertent switchhook jiggle. In addition, the customer may be flashing to initiate a special service request. Consequently, the supervisory junctor scan program reports the change to a hit-timing program which times the duration of the on-hook signal for an interval sufficiently long to discriminate among hits, flashes, and true disconnects. The result is reported to a call control program, which decides the appropriate action to be taken.

A trunk supervisory scan program detects a number of signals, because incoming trunks, outgoing trunks, and a variety of service circuits may be intermixed in a trunk scanner. The program can deduce some information from the changes which it is designed to detect. A change from off-hook to on-hook, for instance, indicates the start of a disconnect or a flash, and reports to the hit-timing program, which then performs the same timing functions as were described for the junctor supervisory program. A change from on-hook to off-hook on an incoming trunk constitutes a request for service, but on an outgoing trunk, it could indicate that the call was answered at a distant office.

The ability to discriminate between service requests on incoming trunks and answers on outgoing trunks is not built into the trunk supervisory program. It instead reports to a call control program that a change in the supervisory state of a trunk has occurred and goes on to see whether any more such changes have occurred on other trunk or service circuits. It is up to the call control program to sort out the requests from the answers.

3.1.2 *Output Programs*

When the No. 1 ESS data processor meets its external environment, it encounters an entirely different time scale. The program processes parts of a call at a very high speed and on a time-shared basis. To operate relays in trunk circuits, activate network controllers, record call charge information on magnetic tape, or transmit a teletypewriter message takes a relatively long time. The processing of other call elements cannot be delayed to wait for these actions, so the program determines what action needs to be performed and buffers data for an output program which specializes in converting the buffered data to the desired action.

Outputs are distributed by the No. 1 ESS peripheral bus system to signal distributors, network controllers, teletypewriter control circuits, and others. The data, consisting of addresses and control information, are stored in temporary memory areas called peripheral order buffers (POB's). The program which controls the transmission of the data is called the peripheral order buffer execution program. It is responsible for seeing that the correct addresses and instructions are sent to the controllers, checking that the proper action was taken in response to the instructions, and reporting back to the call control program the success or failure of the requested action.

3.2 *Call Control Programs*

Each call control program performs a specific function, usually related to a stage in the progress of a call. This separation permits each program to be of a manageable size and to perform a reasonably well defined function. It also makes the addition of new features relatively easy, since the new feature will only affect a few programs.

On a normal intraoffice call, the call control programs which are brought into play and which are responsible for the handling of the call at various stages are: (1) the dialing connection program, used to set up a dialing connection; (2) the digit analysis program, used to record and analyze the digits dialed, and to determine the destination of the call; (3) the ringing and answer detection program, used to establish the ringing connection, detect the called customer's answer, and establish the talking connection; and (4) the disconnect program, used to control the disconnect of the call and restore the lines to the idle state.

3.2.1 *Dialing Connection Program*

A report from the supervisory line scan program that a line has requested service is the input to the dialing connection program. To serve the request, there are several things that this program must do. First, it must find a block of temporary memory in which to store data regarding the calling line and the number that the customer will be dialing. Then it must acquire some information about the line. Does the customer have a rotary dial telephone or a TOUCH-TONE telephone? Is the line an individual, two-party, or four-party line? A PBX trunk? A coin line? Is it a disabled customer who is not able to dial? Has the line been denied service for some reason?

When the answers to the above questions have been obtained, the program knows what it must do. It must select an idle customer digit receiver of a type which is compatible with telephones on the calling line. It must cause a network connection to be made from the calling line to the selected digit receiver. After the connection has been established and the line cutoff contacts opened, it must cause the digit receiver to apply its power cross detection circuitry to the line and read a scan point to determine the results of the test. Next, it must cause the digit receiver to remove the power cross test circuit from the line and, for a two-party line, to apply a party test circuit and then read a scan point indicating the result of this test. After all the necessary tests have been performed and passed, the program causes a relay in the digit receiver to operate and connects a supervisory relay and dial tone to the line. The transfer of supervision from the line ferrod to the supervisory relay in the digit receiver is then checked by reading another scan point. After all the above have been successfully accomplished, the program activates the dial pulse scan program with respect to the chosen digit receiver. Fig. 9 represents the functions of the dialing connection program.

It should be noted that the dialing connection program *causes* the actions mentioned to be taken in the digit receiver, and it *causes* a network connection to be made. It does *not*, by itself, perform these actions in the order stated. Instead, it calls upon the services of the network control program to find an idle path from the line to the digit receiver and to load the network controller addresses and instructions in a peripheral order buffer (POB). The dialing connection program then calls on the circuit control program to load the desired relay and scan actions in the POB. After the buffer loading is complete, the POB execution program removes the instructions from the buffer one at a time until it is emptied. The POB execution program then reports back to the dialing connection program that the job was done successfully. If trouble developed along the way, such as a cross to a foreign potential or a failure to transfer supervision, the rest of the actions would have been skipped and a failure report would have been returned to the dialing connection program.

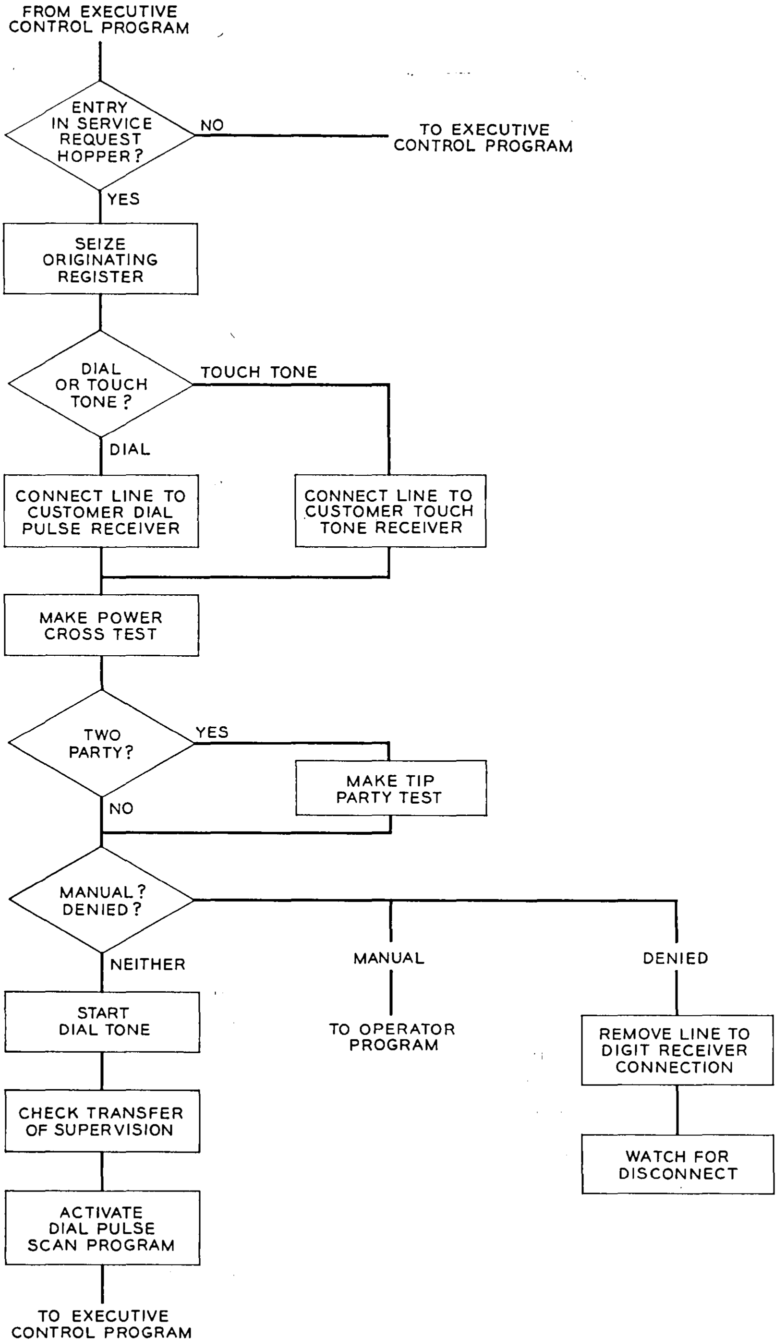

Fig. 9 — Functional flow chart of dialing connection program.

3.2.2 *Digit Analysis Program*

The responsibility of the dialing connection program ends with a successful report, and control of the call is passed to the digit analysis program. This program is responsible for recording, counting, and interpreting the customer's digits as they are dialed, determining the routing of the call if a valid number is dialed, determining whether a called number is busy or idle, and determining what the disposition of a call should be if it cannot be completed.

The dial pulse detection or the TOUCH-TONE digit detection input-output programs provide information to the digit analysis program by reporting to it when a digit is received, when an abandonment is detected, when the first dial pulse of the first digit is received, or when a permanent signal or partial dial time-out is detected. The program counts and stores the digits as they are reported to it in the temporary memory space (register) reserved by the dialing connection program. As the digits are received, some are merely counted and stored. For others, an analysis of the digits which have been received is made to determine what course to follow. For instance, when the first digit is dialed, the program determines whether the digit is zero (ten dial pulses). If so, dialing is finished and the call is directed to an operator. Control of the call then passes to a program which controls connections to switchboard operator's trunks. Any other digit (except the digit one, which is not a valid first digit of any area or office code) is stored, and a digit counter is incremented by one. Upon receipt of the third digit, an analysis of the first three digits is made. If the service code, 411, has been dialed, it is known that a connection to an information operator is desired. Dialing is finished, and control is passed to a program which will perform the desired action. Other three-digit codes are treated in a similar manner. If the first three digits are an office code in the same numbering-plan area, four more digits are expected. If the first three digits are those of a foreign area code, it is known that seven more digits must be received in order to be a valid number. The routing of the call can often be determined at this time. The office or area code determines whether it is an intraoffice call or an outgoing call. If the call is outgoing, it may be possible to determine the first-choice trunk group. However, some codes require six digits to be dialed before a route can be chosen.

Additional digits beyond the third are merely stored and counted until seven or ten have been received, depending upon whether a home numbering-plan office code or a foreign numbering-plan area code has been dialed. If the call is outgoing, the digit analysis program selects an outgoing trunk to the distant office, selects a digit transmitter of the proper type, causes a connection to be established between them, and then passes control to an outpulsing program which will seize the trunk, make the necessary tests, and transmit the called number to the distant office.

On a call destination within the No. 1 ESS, the digit analysis program acquires some information regarding the class of the called line, finds out whether the line is busy or idle and, if idle, passes control to the ringing and answer detection program.

The digit analysis program also finds out whether a charge is to be made for the call. If so, it notifies a program which records the pertinent information.

If, during the dialing of the call, the customer hangs up and abandons the call, the digit analysis program causes the network connection to be removed, idles the digit receiver, and releases all temporary memory.

Permanent signal and partial dial reports are merely passed on to a program designed especially to take care of these conditions. Fig. 10 is a functional flow chart of the digit analysis program.

3.2.3 *Ringing and Answer Detection Program*

The ringing and answer detection program, as its name implies, controls all system actions on intraoffice or incoming calls from completion of dialing until answer. Its basic job is to connect ringing to the called line, connect audible ringing tone to the calling line or trunk, establish a talking connection if the call is answered, and remove all connections if the call is abandoned before answer.

The network locations of the lines and the type of ringing to be applied to the called line are needed to set up the ringing connection. The information regarding the calling and called lines (on an intraoffice call) is passed to the ringing and answer detection program by the digit analysis program. With this information, the ringing and answer detection program calls upon the services of the network control program, asking it to: (1) find idle circuits connected to the active phases of ringing and audible ringing (it was mentioned earlier that three groups of regular ringing trunks and audible ringing tone trunks are furnished, one for each phase of ringing to provide immediate ringing; the ringing and answer detection program keeps informed of which ringing phase is active); (2) find an idle path from the calling line to the selected audible ringing tone circuit; (3) find an idle path from the called line to the ringing circuit; (4) reserve a path from the calling line to the called line;

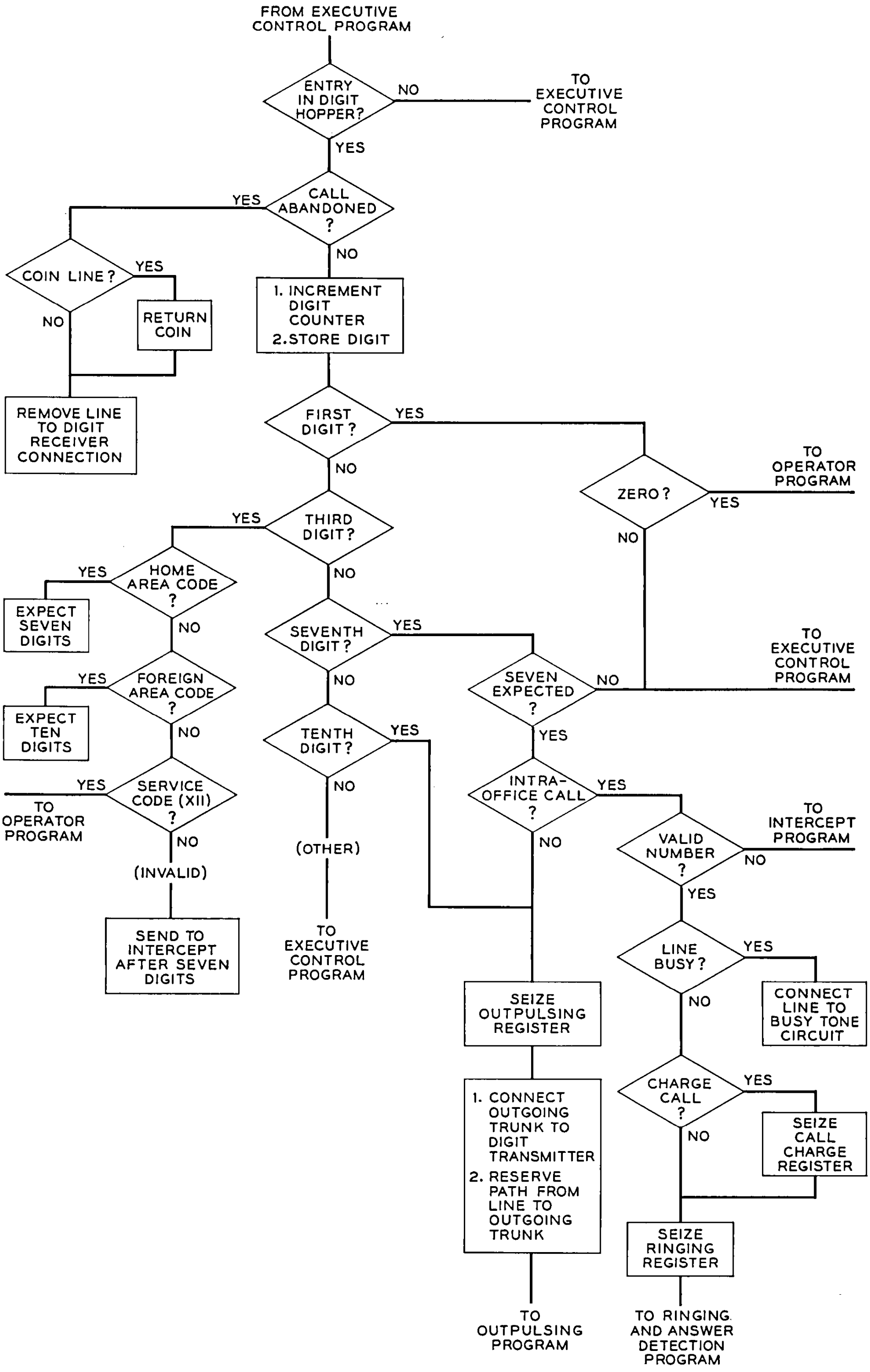

Fig. 10 — Flow chart of digit analysis program.

and (5) load the instructions for making the two connections into the peripheral order buffer.

The ringing and answer detection program next calls upon the services of the circuit control program to load further instructions in the POB which will cause the ringing circuit to perform a power cross test, a pretrip test, and a continuity test. The circuit control program also loads instructions to operate relays in the circuits which will apply twenty-cycle ringing voltage to the called line and audible ringing tone to the calling line in addition to checking that transfer of supervision has taken place at the audible tone circuit.

The job of the ringing portion of the program is almost complete at this time. All that remains is to activate the POB, wait until the POB execution program reports its success in completing the list of instructions, and activate the input-output programs which scan the ring trip ferrods and the audible ringing tone circuit supervisory ferrods.

An answer by the called party causes the ring trip relay to operate and saturate the ring trip ferrod. The answer is detected by the ring trip scan program and is reported to the ringing and answer detection program. Upon receipt of the report, the ringing and answer detection program again calls upon the services of the network control program and the circuit control program to release any operated relays in the ringing and audible circuits, to idle the two network paths, to set up a new path from each line to a junctor circuit, and to check that the supervision of each line is transferred to the junctor circuit.

If a charge is to be made on the call, the ringing and answer detection program reports the answer to the call charge program, which will record the time of answer.

After the ringing and answer detection program activates the input-output program which scans the junctor supervisory ferrods for disconnect, it finishes its responsibility for advancing the progress of the call. Fig. 11 is a flow chart of the functions performed by the ringing and answer detection program.

3.2.4 *Disconnect Program*

Unless a special service call or a coin call is in progress, no other call control program is called into play until one of the customers hangs up. At this time, on an intraoffice call, the junctor supervisory scan reports the event to the disconnect program. Hit timing will already have been performed by a program associated with the junctor supervisory scan program.

The functions of the disconnect program are: to detect flashing for

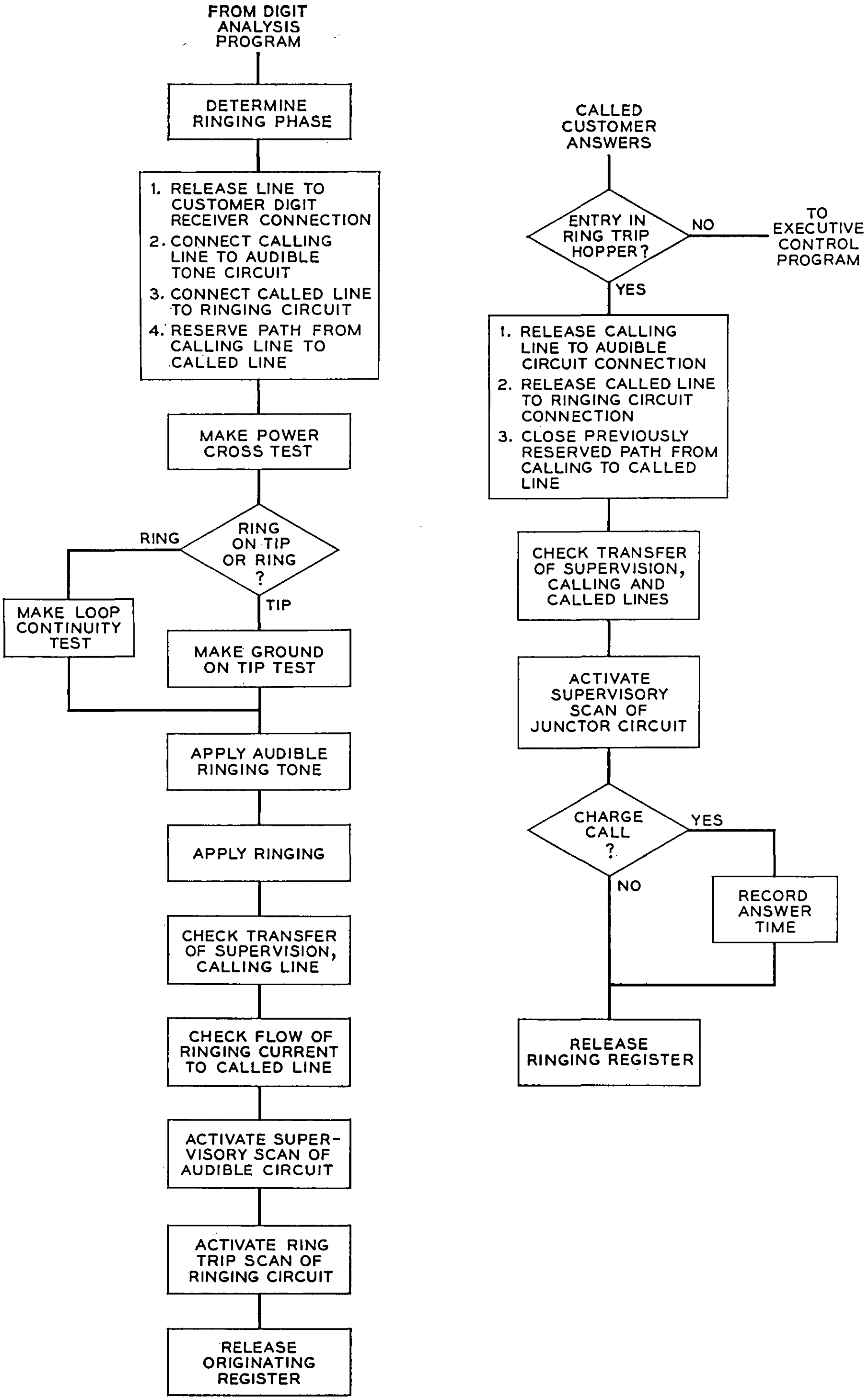

Fig. 11 — Ringing and answer detection program flow chart.

special services from those lines permitted to flash; to provide calling line control of the call (yet not permit it to keep a called line permanently tied up); to signal disconnect to a distant office over an incoming or outgoing trunk; to remove a talking connection at disconnect; to restore to idle any lines or trunks involved in the call; and to call in other programs to handle special conditions.

To determine the treatment for a disconnecting line, the program first finds out some information about the line. Is it the calling or called party? Is the line a coin line? Does it have any special services? Has the other end already disconnected? On an interoffice call, is it the line side or trunk side that is disconnecting? An incoming or an outgoing trunk? Is a charge record being made? Different actions are called for, depending on the answers to these questions.

On an intraoffice call, if the disconnect is from a *calling* line with no special services, the program knows that it does not have to perform flash timing. Because calling line control is provided, it is known that the call is over. The connection is not immediately removed, however, unless the *called* line has disconnected also. The program waits a reasonable length of time to permit the other party to hang up so that the line still off-hook does not appear to the system as a false request for service. When it detects the disconnect, it then calls upon the services of the network control and circuit control service programs to remove the network connection, to idle the junctor circuits, and to restore and check the line ferrods of the two lines.

The people involved in the conversation, however, may not perform the actions in the order given above. The called party may not hang up his phone within a reasonable time (10 to 12 seconds), or the calling customer may initiate another call very shortly after hanging up and before the called party replaces his receiver. In either of these cases, the network connection is removed and the lines are idled.

A called customer, upon disconnecting first, is permitted 10 to 12 seconds during which he may pick up his telephone and still find his original connection existing — if the calling customer has not hung up in the meantime.

The disconnect program calls in a coin control program when it knows that a coin line disconnects, in order that a coin-collect or coin-return action may be performed. A functional flow chart of the disconnect program is shown in Fig. 12.

3.2.5 *Other Call Processing Programs*

To handle call types other than the simple intraoffice call, other call control programs exist. Each is designed to take care of a particular

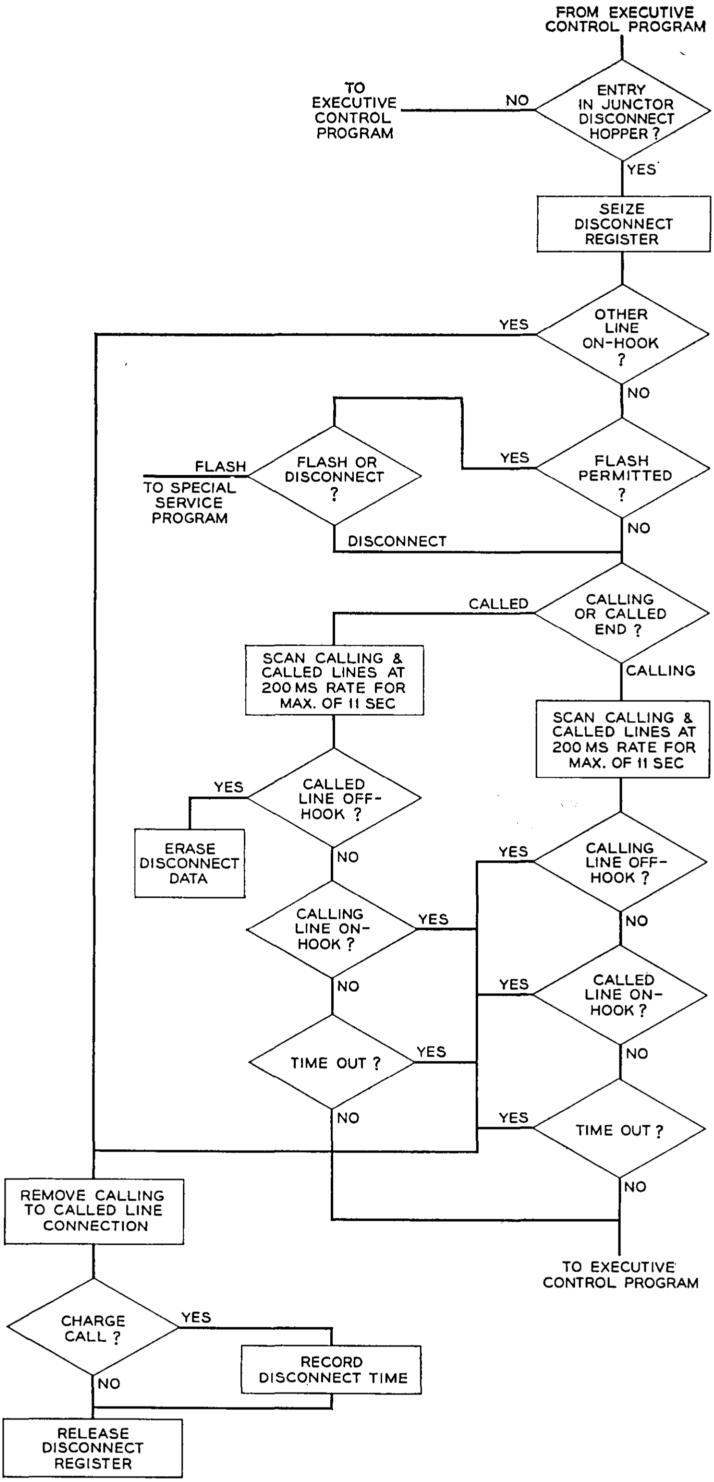

Fig. 12 — Program flow chart for disconnect of an intraoffice call.

stage of a call's progress or a particular type of call. A partial listing and a brief description of each follows:

3.2.5.1 *Outpulsing Program.* A call terminating in another central office requires that the called number be transmitted to that office in a form which it is prepared to accept. Several forms of signaling have developed over the years, and No. 1 ESS must be prepared to perform any of them. They are: dial pulsing, revertive pulsing, multifrequency pulsing, and panel call indicator pulsing. Since each is quite different from the others, a different program is designed for each.

To make an outpulsing program universally applicable to a number of call situations, the call procedure is designed so that a network connection between a digit transmitter and an outgoing trunk will already have been established. The outpulsing program then causes the outgoing trunk and the transmitter to be set in the proper states to test the continuity and polarity of the pair of leads to the distant office, to send a seizure signal, to detect a start pulsing signal, and then to cause the called number to be transmitted. It does this with the cooperation of input-output programs that are capable of generating dial pulses, multifrequency pulses, etc. The outpulsing program gives the dial pulse generating program (for instance) a digit. The dial pulse generating program forms the necessary number of dial pulses, measures an interdigital interval, and reports that a digit has been transmitted. The process is repeated until all required digits have been sent. Prefixing or deletion of digits is predetermined by the digit analysis program

3.2.5.2 *Operator Programs.* The actions required for calls to switchboard operators are different from those for other call types. As soon as a call is made to an operator, control is passed to the operator program. Calls to assistance and toll operators provide for joint holding, and these operators are permitted to ring back to a busy or an idle line. The operators also collect and return coins. In addition to the assistance and toll operators, there are information operators, business office operators, intercept operators, and repair service operators, all with their own functions and signaling arrangements.

3.2.5.3 *Permanent Signal and Partial Dial Program.* Those call attempts which become permanent signals or partial dials are handled by a program designed to switch the call first to an announcement requesting that the customer hang up and then to a distinctive receiver off-hook tone for a timed interval. If these actions do not succeed in removing the condition, the program connects the line to an operator to see whether she can provide assistance, and then to the master control center for a maintenance man to test the line conductors (he determines whether a trouble condition exists). The permanent signal and partial dial program guides the call through the various steps, performing the timing functions and requesting the needed network connections and relay operations in the circuits which are involved.

3.2.5.4 *Traffic Measurement Programs.* To determine the traffic levels in a No. 1 ESS office, a number of traffic measurements are made. Traffic engineers make use of peg counts, overflow counts, and usage counts to tell whether the number of circuits of various types or the number of trunks in various routes should be increased or decreased to carry the offered traffic.

A separate program can continuously generate service requests to measure and count the number of attempts on which excessive dial tone delays are experienced. The results of the traffic measurements are printed by a teletypewriter printer on a regular schedule.

3.3 *Service Routines*

Most call control programs use a number of service routines while controlling the progress of a call. Examples of service routine usage are: to request a change in a network configuration, to request the operation or release of a relay in a trunk or service circuit, and to obtain translation information. These service routines are used not only by the call control programs but also by the maintenance and diagnostic programs.

Because the service routines serve many clients under varying conditions, rules are established which must be obeyed whenever the service routines are used. The presentation of certain data in a certain format will cause a particular action to be performed, or particular translation information to be obtained. In use, the client sets up the necessary data in a prescribed manner and then passes control to the service routine. When the service routine finishes its requested action, it returns control to the client with data useful to the client in a predetermined location.

3.3.1 *Network Control Program*

The primary functions of the network control program are to hunt for idle network paths, to administer the network map and path memory, and to load instructions in POB's, which will be used to close network paths.

In the process of performing these functions, the network control program is provided with the ability to find an idle trunk in a group, to make a second trial if all the paths to the first selected trunk are busy, and to consult the translation program to find an alternate route if all trunks are found busy in the first-choice route.

Since the record of the busy or idle condition of all links in the switching network is kept in temporary memory (called the network link map), the network control program can reserve a path from one terminal to another for expected use at a later stage of a call. Similarly, the information regarding a connection established in the network is kept in temporary memory associated with network terminals (called path memory). The network control program records pertinent information about a path at the time a connection is made or removed.

3.3.2 *Circuit Control Program*

When a call control program determines that a change of state in a trunk circuit or service circuit is required to make a test or cut through a talking pair, the call control program calls upon the services of the circuit control program. It need only inform the circuit control program of the type of circuit to be used and the function to be performed. The circuit control program will then load the POB with the signal distributor operations necessary to implement the change and any scanner actions needed to check that the operation was performed successfully.

3.3.3 *Translation Program*[6]

Translations from line equipment number to calling line class and directory number, from office code to routing information and charge class, and from directory number to line location and class, are needed in the No. 1 ESS just as they are in other common control systems. Instead of this information being obtained by wired cross-connection fields, it is contained in tables stored in memory. The translation program gains access to the translation tables.

3.3.4 *Coin Control Program*

The collection and return of coins in coin phones is performed by a small number of coin control circuits in No. 1 ESS. A program which specializes in performing the functions required for these actions may be called in by any other call control program. In order for another call control program to use the coin control program, it must first establish a connection from the coin line to the coin control circuit and inform the coin control program whether a collection or a return is to be made.

The principal programs used in processing calls in No. 1 ESS are shown in Fig. 13. The connecting lines indicate transfer of information or of control.

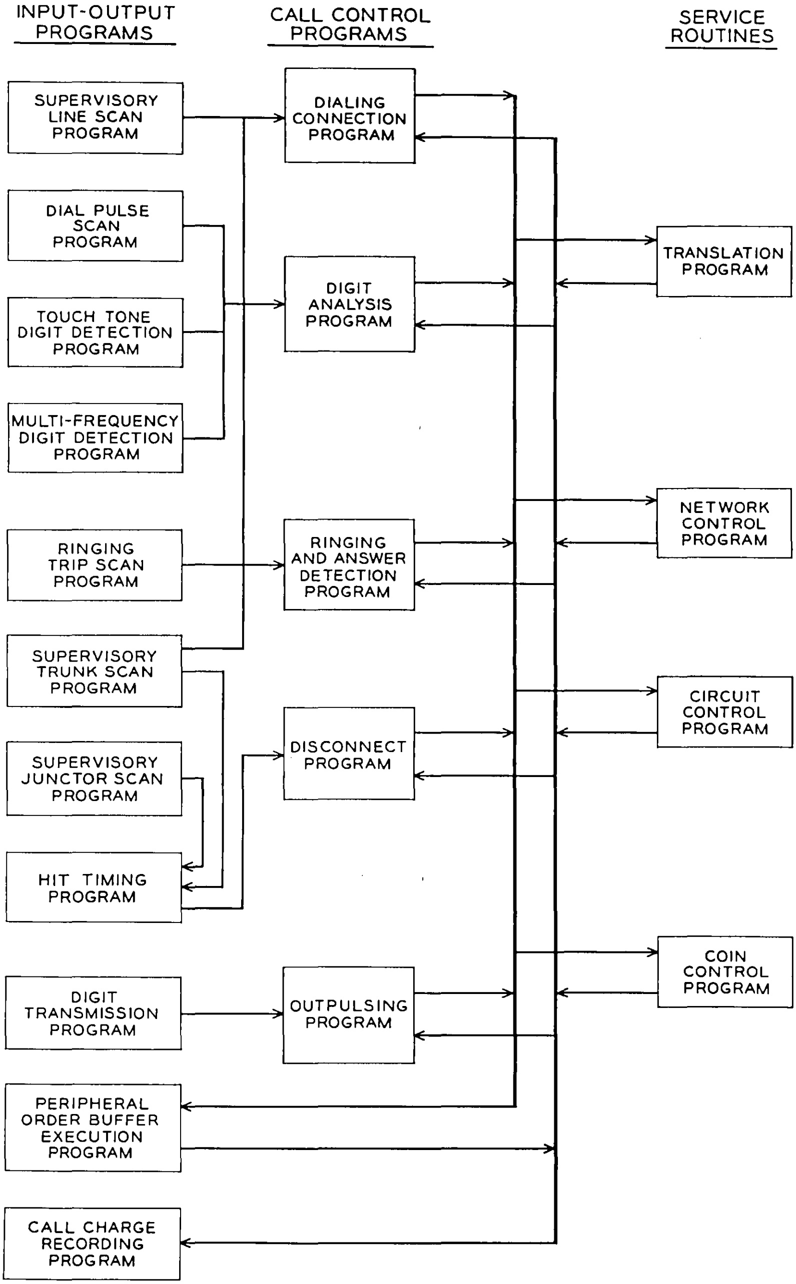

Fig. 13 — Programs used in processing calls.

IV. TEMPORARY MEMORY

Associated with the input-output programs, the call control programs, and the service routines, there are always data which change with the activity on a line or trunk, or with the progress of a call. These changeable data are kept in a temporary memory called the call store. Just as functional blocks of programs may be classified as being associated with system inputs and outputs, with call processing, or with service routines, so blocks of temporary memory may be associated with the same functions. The proper recording of information in temporary memory provides the means by which the various parts of a call are linked together and continuity of the call is maintained.

4.1 *Input-Output Oriented Memory*

Temporary memory is associated with each scan point of a line, junctor or trunk scanner in order to keep a record of the supervisory state of the facility connected to it. This memory is used primarily by the supervisory programs in detecting requests for service, disconnects, and answers. Since only service requests can be detected at a line ferrod (it is disconnected by cutoff contacts when a digit receiver is attached and not restored until disconnect), one line supervisory memory bit is associated with each line ferrod. The supervisory line scan program simultaneously reads the ferrod and the line supervisory memory, compares them and, if the line supervisory memory reads idle while the ferrod shows an off-hook condition, deduces that the customer has lifted his receiver. The scan program reports this to the dialing connection program. In the process, the line supervisory memory is marked to indicate that further readings of the bit should be ignored. In this sense, the line supervisory memory serves as a memory of the previous scanner reading and also as a busy or idle indicator for the line.

Each junctor circuit has two ferrods which supervise the two parties during talking. The customers can disconnect from the talking state only when connected to a junctor circuit; thus only one bit of temporary memory is needed for each junctor scan point. The junctor supervisory memory serves a purpose similar to the line supervisory memory in indicating the previous scanner reading.

Trunk supervisory points are multifunctional in that originations, answers, and disconnects are signaled to the system by them. Different trunk circuits and service circuits that have varying numbers of scan points appear on the same scanner in a pattern that changes from office to office. For these reasons, each scan point of a trunk scanner is assigned two bits of temporary memory. These two bits are used to indicate: (1) that the facility is idle and may originate a request for service; (2) that the facility is in a talking state and should be monitored for disconnect; or (3) that the scan point may be changing for other reasons, such as signaling, and that the supervisory trunk scan should ignore any changes that it sees.

The digit receivers and digit transmitters each have associated temporary memory, which may be thought of as an extension of the circuits themselves. For instance, a relay in the dial pulse receiver is capable of following dial pulses. The relay activates the same scan point on each dial pulse. The dial pulse scan program, in conjunction with the temporary memory associated with the receiver, keeps a count of the pulses as they are received. Then, at the end of an interdigital time-out interval, the digit is reported to the digit analysis program, which counts and stores the digit in temporary memory. This is analogous in crossbar systems to a pulsing relay operating a set of counting relays and transfer of the pulse count at interdigital timeout to a set of register relays, steered by a digit counting circuit. Provisions for permanent signal and partial dial timing are also made, both in the No. 1 ESS and in crossbar systems.

A number of calls are being dialed into, or pulsed out of, the system at any one time. Therefore, there must be a way to keep a particular digit receiver and its temporary memory associated with a particular call. A call control register serves as the controlling register for the call. Its address is stored in the dialing register associated with the digit receiver serving the call. The dialing register is often referred to as a junior register.

Similar registers, differing slightly in use and format, are associated with TOUCH-TONE receivers, multifrequency transmitters and receivers, revertive pulse transmitters and receivers, and panel call indicator transmitters.

Another register closely associated with input programs is the hit timing register, which assists in timing disconnects to insure that hits do not cause false disconnects. This register also assists in performing the functions of timing for flashes and called party disconnects, as a service for the disconnect program.

4.2 *Hoppers*

Because the number of input-output actions is very large in wire centers served by No. 1 ESS, and because the system must meet very tight timing requirements for certain of its input-output programs, it is necessary to limit the continuous length of processing time devoted to any given input. When a given input is detected that requires the attention of a call control program, the input program reports its finding in an area of call store called a hopper. Each input-output program is assigned one or more hoppers in which it stores information. A call control program, scheduled at a later time by the system's executive program, removes the information from the hopper and uses it to advance the call with which the information is associated. This permits the high-priority input-output program to concentrate on interrogating as many lines, trunks, digit receivers, or transmitters in as short a time as possible. The program has only to load some data in a hopper and continue, rather than interrupt its primary input-output function to perform more complex and less urgent tasks.

Since the data reported by the input-output programs are associated with a particular call, the identity of the call is stored in the hopper along with the data. The line supervisory scan program, for instance, reports to the dialing connection program through the service request hopper. The information stored in the hopper is the line equipment number, the only identification available at this stage of a call.

The dial pulse detection program, however, reports to the digit analysis program through three different hoppers, each reporting a different event: the dial pulse digit hopper reports digit counts and call abandonments; the remove dial tone hopper reports the receipt of the first digit; the permanent signal and partial dial hopper reports the named events. In each case, the identifying datum is the originating register address.

A partial list of hoppers, the names of which are self-explanatory, follows:

line service request hopper
dial pulse digit hopper
TOUCH-TONE digit hopper
multifrequency digit hopper
revertive pulse digit hopper
remove dial tone hopper
permanent signal, partial dial hopper
ringing trip hopper
junctor disconnect hopper
trunk disconnect hopper
peripheral order buffer execution result hopper
request outpulsing digit hopper
request teletypewriter character hopper.

4.3 *Output Buffers*

The peripheral order buffer execution program has been described as one of the principal means by which No. 1 ESS controls the switching network and various trunk, junctor, and service circuits. The peripheral order buffer is the temporary memory area used to list the network controller, signal distributor, central pulse distributor, and scanner actions necessary to accomplish a desired result. The number of these areas is variable and dependent upon the expected traffic load in the office.

In addition to the list of instructions to be carried out, the POB contains a cross reference to the call control register for which it is performing a service and to one or more program addresses to which it returns to report success or failure.

Similar in character and in operation to the POB are the buffers provided for transmitting teletypewriter messages and for recording call charge information on magnetic tape. The characters for a teletypewriter message are placed sequentially in a teletypewriter buffer and then are removed and converted to teletypewriter code, one character at a time, at a rate compatible with the transmitter. Call charge information is placed on magnetic tape in blocks of 500 characters. A buffer to accommodate this function is furnished. When a block of 500 characters is filled, an unloading program transfers the data to tape.

The output buffers for digits to be outpulsed to a distant office are those registers which are associated with digit transmitters and which are used by the input-output programs.

4.4 *Call Control Registers*

Call-processing registers are blocks of temporary memory used by call control programs to store data during a particular stage of the progress of a call. The information needed by different functions is not necessarily the same in content or amount; therefore, call control registers associated with different functions will differ in size.

All call control registers have a standard format. The first four words (a word consists of 23 bits) of any call control register are used for specific storage purposes. The first word of a call register contains the identity of the register and call state; this word is referred to as the state identifier. The second, or queue, word is used to insert the register on a waiting or a timing list. The third word is called the link word, used to hold another call control register's address if more than one register is associated with the call. The fourth, or scan, word contains the address of a scan register if the call control program has requested scanning of some particular point or points. The next group of words in any call control register is set aside for network path memory. This storage area is referred to as the path memory annex and may differ in length from one type of call control register to another. The storage area following the path memory annex area is called the data area of the register, and its size is dependent on the data needed by the associated call control programs.

A brief description of the major call control registers used in the No. 1 ESS follows.

The originating register is used by the dialing connection and digit analysis programs. The path memory annex consists of two words and contains the path memory necessary for the connection from the originating line to the digit receiver. The data area of the register must hold the address and the class information of the originating line, the dialed directory number, the digit count, and other program control information.

The ringing register is used as a storage medium by the ringing and answer detection program. It is held for the period from the completion of dialing through the establishment of the talking connection. The path memory annex of the ringing register consists of seven words and contains the path memory necessary for the connections from the originating line to an audible tone trunk, from the terminating line to the ringing trunk, and the reserved path from the originating line to the terminating line. The data area contains class information of the terminating line, a condensed version of the originating line class, and program control information.

At the completion of dialing, if the call is outgoing, the originating register is changed to an outpulsing register. The digit analysis program does this by changing the state identifier of the register. The program also seizes a block of temporary memory and links this to the newly designated outpulsing register. The address of this block of temporary memory is stored in the first word of the path memory annex of the outpulsing register. The network path memory of (1) the connected path from the connections from the originating line to the digit receiver, (2) the connected path from the transmitter to the outgoing trunk, and (3) the reserved path from the line to the outgoing trunk is stored in this five-word temporary memory block. The data area of the outpulsing register contains the originating class information, dialed directory number, a route index specifying the first-choice outgoing route, and program control data.

The disconnect register is seized upon recognition of a disconnect and

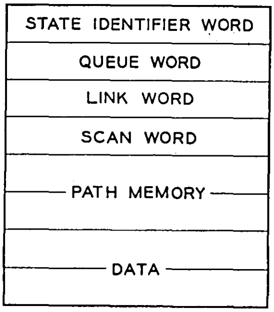

Fig. 14 — Typical call control register format.

is used by the disconnect program for timing and scanning. The path memory annex of the disconnect register consists of three words and contains the path information for a line-to-line, or line-to-trunk, connection. The data portion contains program control information.

The linking of call control registers is a one-way circular link. That is, if call control registers A, B, and C are associated with a call at a particular time, then register A contains register B's address in its link word; register B contains C's address; and register C contains A's address. Should a call program controlling this call decide to release register B, then the linkage is updated such that register A contains register C's address and register C contains A's address. Fig. 14 shows a typical call control register layout.

4.5 *Service Routine Registers*

A wide variety of registers exist to store data for use by service routine programs. The call charge register, peripheral order buffer, and coin control register are examples of service routine registers. The size and layout of these registers vary markedly.

The call charge record register has a layout identical to that of a call control register. The path memory annex of the call charge register is three words in length. The linking between a call charge register and a call control register is implemented in the same manner as the linking between call control registers.

The coin control register and peripheral order buffer contain primarily call control data and do not have the standard call control register layout, nor are they linked to a call control register in the previously described manner. They are used exclusively by the associated service routine program.

4.6 *Network Memory*

A portion of call store is reserved for the purpose of recording the busy-idle condition of the network links and junctors. This memory block is commonly referred to as the network map and is used by the network program in establishing or reserving network connections. In addition to the network map, a word of call store memory is assigned for every junctor terminal appearance on a line link network and for every trunk terminal appearance on a trunk link network. There is a direct relationship between a terminal and the address of its associated word. These words for junctor and trunk terminals are commonly referred to as path memory for lines and path memory for trunks, respectively.

The information in the path memory for trunks, together with the trunk network number, uniquely specifies a junctor's terminal and the network links used in the trunk link network. Translation and conversion programs facilitate the derivation of the address associated with the junctor terminal in the line link network. The network number of the line junctor terminal, together with the contents of the path memory for lines, uniquely specifies the line and the links used in the line link network.

When no call control register is associated with a line-to-trunk connection, the path memory for lines contains the line equipment number of the No. 1 ESS customer and some control information specifying originating or terminating line, special treatment, coin line, and flash permission. The path memory for trunks contains a junctor network number and control information specifying originating or terminating terminal, and flash permission for the No. 1 ESS customer.

When no call register is needed on a line-to-line connection, each line junctor terminal word contains a customer's line equipment identification and control information. Translation programs facilitate the derivation of the address of either junctor terminal, given the other end.

When a call control register is associated with a connection, the address of the register is placed in the word, which usually holds the path memory for trunks on a line-to-trunk connection. On a line-to-line connection, the address of the register is placed in the words which normally hold the path memory for lines. In both cases, the displaced path memory is stored in the call control register in the area called the path memory annex.

4.7 *Recent-Change Register*

Since the translation tables are stored in the program store, which is not changeable by the program during normal operation, an area of temporary memory is set aside to provide an alternate location for the day-to-day administration of line number changes, new connections, disconnected lines, routing changes, etc. When this recent-change area is filled, the data are transferred to the program store's twistor cards by replacing them with new cards written in the program store card writer, a part of the master control center.

The translation program searches the recent-change register for a requested translation before going to the program store's tables, because there is a possibility that a change might have been made on the data.

Fig. 15 shows the principal blocks of temporary memory used for call processing and the flow of information from one to another.

V. PROCESSING AN INTRAOFFICE CALL

5.1 *Detection of Origination*

Fig. 16 demonstrates the role played by the program, the memory, and the equipment involved when a request for service is initiated. The supervisory line scan program examines the line ferrod sensor condition, with its associated line supervisory memory, approximately ten times per second. Upon detecting a line ferrod sensor in a saturated state and its line supervisory memory in an idle state, the program recognizes an origination. The program enters the line equipment number (LEN) in the line service request hopper.

5.2 *Connection of Line to Digit Receiver*

The first action of the dialing connection program, as illustrated in Fig. 17, is to examine the line service request hopper for an entry. Upon detecting an entry, the dialing connection program seizes an originating register and stores the customer's line equipment number in it (from the line service request hopper). After storing the line equipment number, the dialing connection program transfers control to the translation program, giving it the calling customer's line equipment number. The translation program returns with the originating line class information, consisting of: (1) TOUCH-TONE or dial pulse receiver required; (2) class of line (manual, individual, party, coin); (3) type of service (flat rate, message rate). The dialing connection program stores the originating class information in the originating register, then seizes and initializes a peripheral order buffer (POB). The dialing connection program next transfers control to the network control program, giving it the customer's line equipment number, the originating register's address, and a code for the type of receiver.

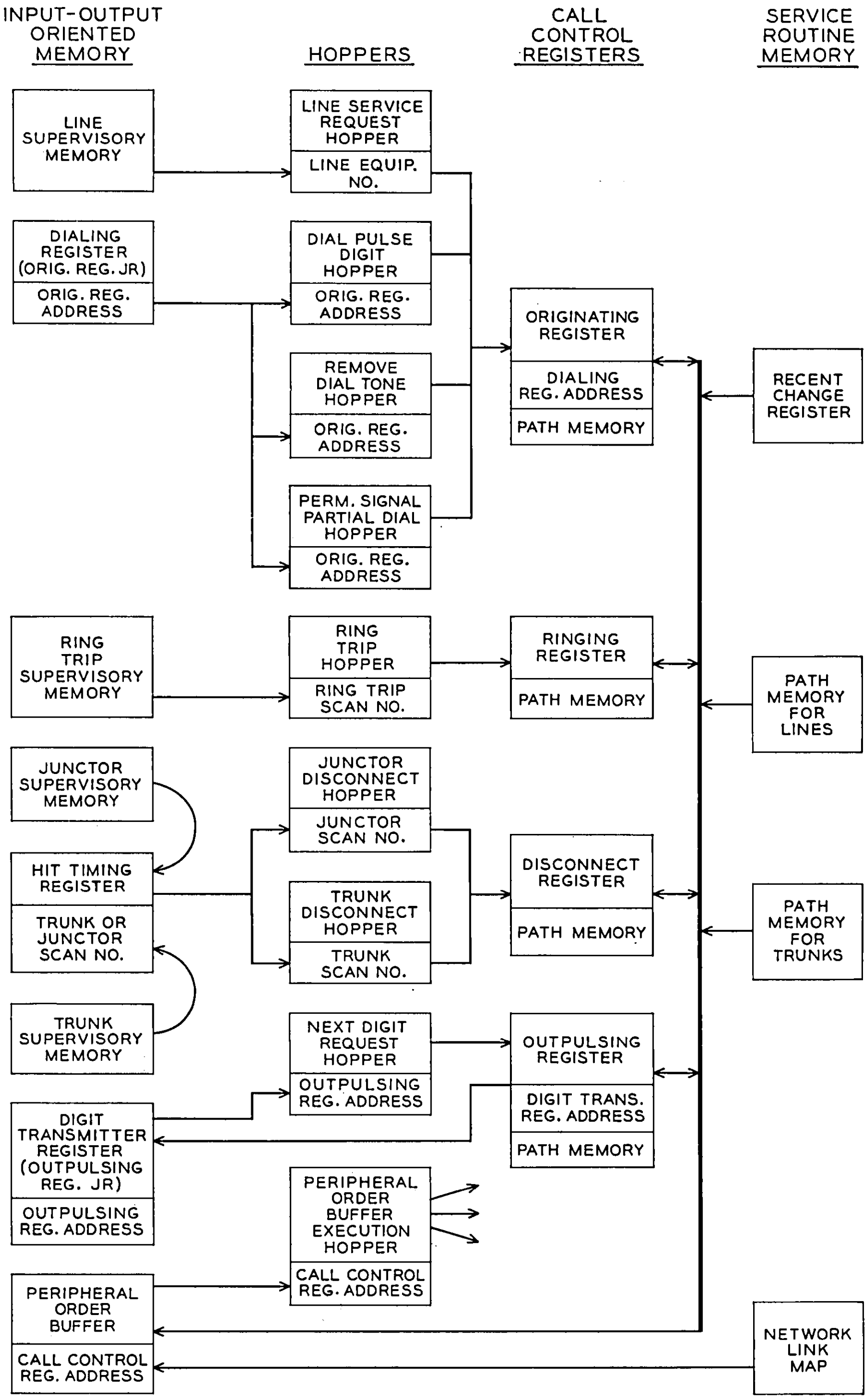

Fig. 15 — Temporary memory used for processing calls.

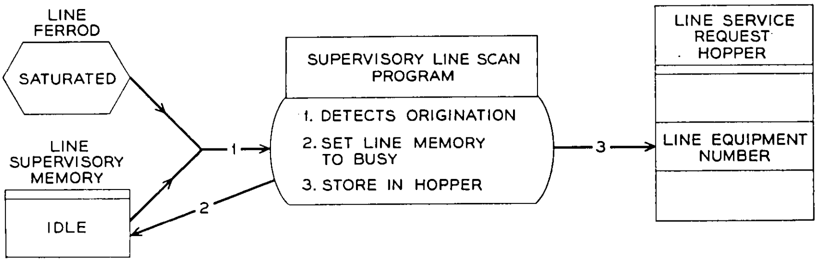

Fig. 16 — Detection of origination.

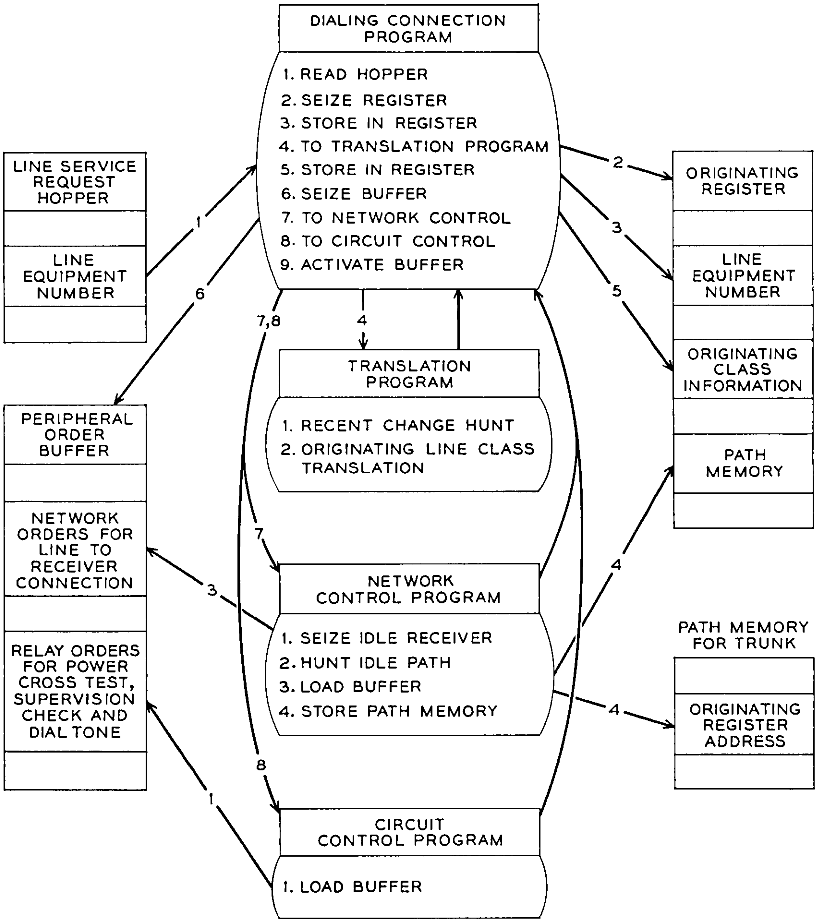

Fig. 17 — Initial actions for connection of line-to-digit receiver.

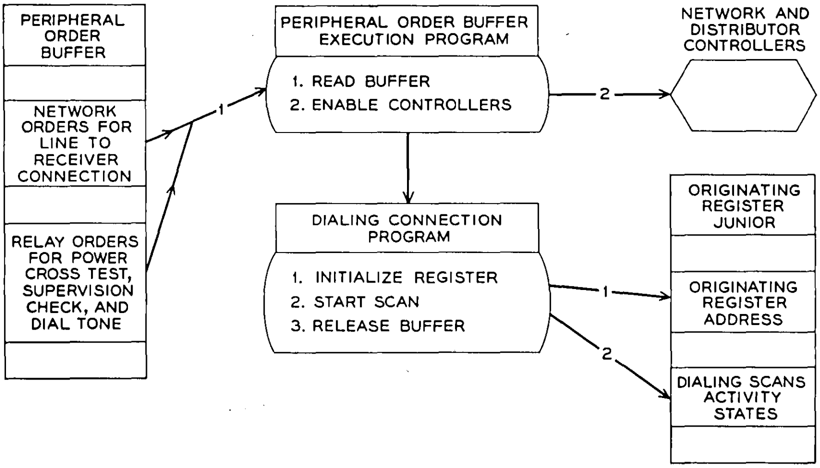

Fig. 18 — Final actions for connection of line-to-digit receiver.

The network control program loads the POB with instructions to establish the network connection between the customer's line and the receiver's trunk network number. The circuit control program loads the relay and scan operations required to perform the power cross test, transfer of supervision check, and application of dial tone. After completion of the loading, program control is returned to the dialing connection program which activates the POB.

As shown in Fig. 18, the POB execution program causes the instructions in the POB to be carried out. The successful execution of these instructions establishes a configuration as shown in Fig. 19; the originating line is connected to the digit receiver by a path through the line link and trunk link networks. Dial tone is applied to the originating

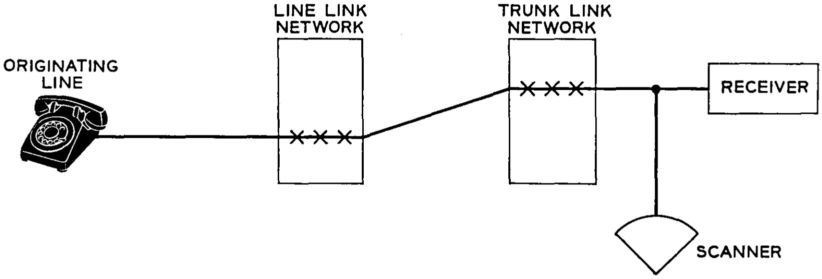

Fig. 19 — Receiver connection.

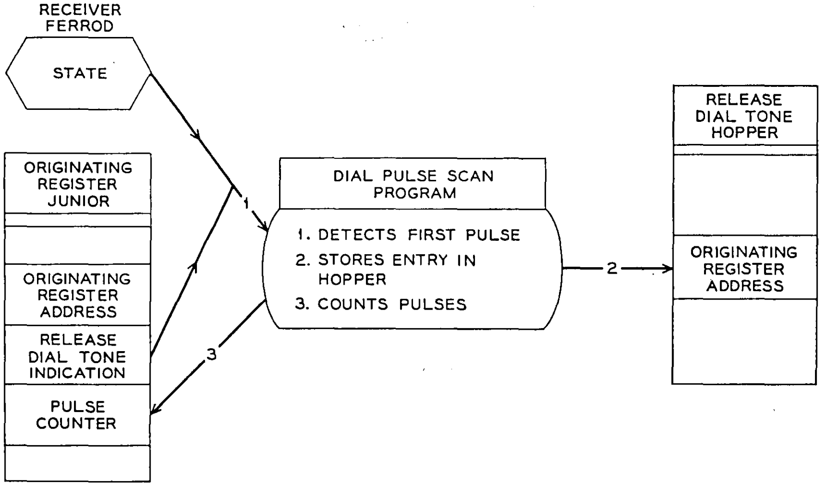

Fig. 20 — Detection of first pulse.

line, and supervision for abandonment is performed at the digit receiver. Upon successful execution of the instructions in the POB (as shown in Fig. 18), control returns to the dialing connection program. The dialing connection program releases the POB, stores the originating register address in the originating register junior, and sets indications in the originating register junior which initiate scanning for dial pulses, abandons, interdigital, permanent signal, and partial dial timing.

5.3 *Digit Analysis*

5.3.1 *Release of Dial Tone*

As shown in Fig. 20, the dial pulse detection program examines the ferrod associated with the pulsing relay of the receiver, and the originating register junior, to count dial pulses and to recognize the first pulse of the first digit. When the first pulse of the first digit is detected, the dial pulse scan program stores the originating address in the remove dial tone hopper and increments the pulse counter.

The digit analysis program (as shown in Fig. 21) regularly examines the remove dial tone hopper. On detecting an entry, the digit analysis program seizes and initializes a POB. The digit analysis program then transfers control to the circuit control program, giving it the receiver's trunk network number. The circuit control program loads the necessary

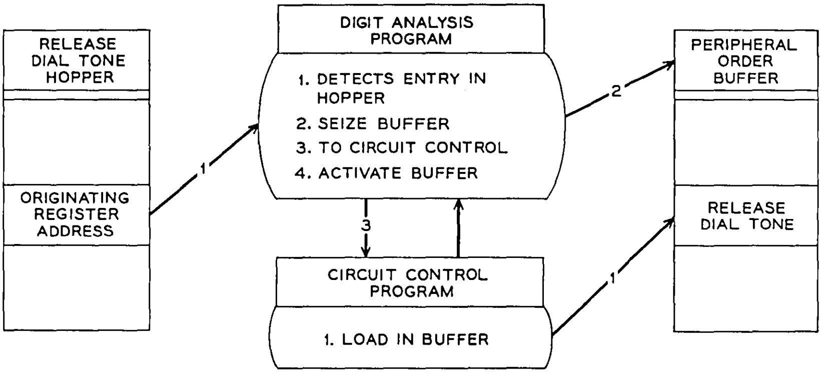

Fig. 21 — Initial actions for the release of dial tone.

instructions in the POB to release dial tone and then returns to the digit analysis program, which then activates the POB.

Upon successful execution of the POB (as shown in Fig. 22), control returns to the digit analysis program. This program marks a dial tone released indication in the originating register and releases the POB.

5.3.2 *Reception of Digits*

As shown in Fig. 23, if the receiver ferrod remains in a saturated state for a period of 120 to 240 milliseconds, the abandon-interdigital timing

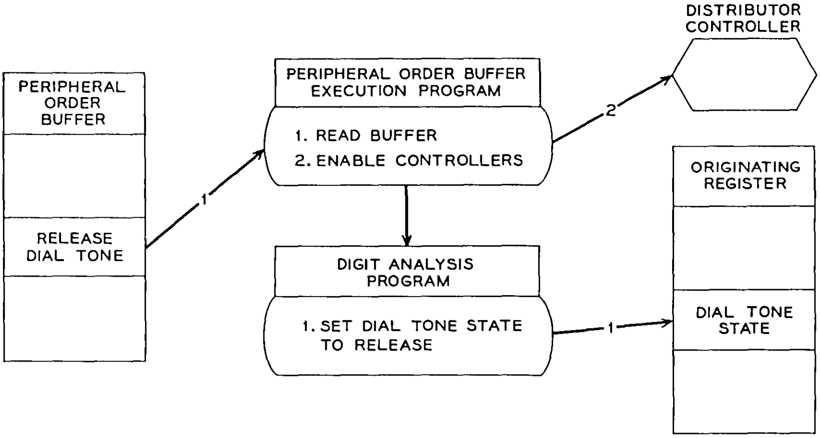

Fig. 22 — Final actions for the release of dial tone.

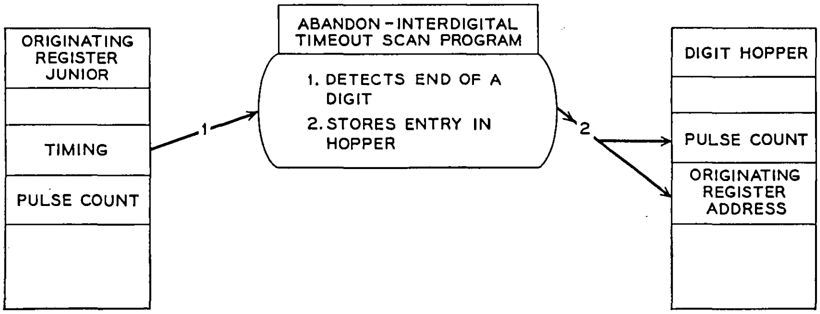

Fig. 23 — Reception of digits.

program determines that this is the end of a digit. The program interrogates the originating register junior for the pulse count and the originating register address and stores both items in the dial pulse digit hopper.

The digit analysis program (as shown in Fig. 24), scheduled by the executive control program, detects the entry in the dial pulse digit hopper, stores the pulse count in the originating register, and increments a digit counter. When the digit analysis program recognizes that the third digit has been received, it delivers the first three digits to the translation program. The translation program returns the following three-digit class information to the digit analysis program: (1) special service code dialed; (2) invalid code dialed; (3) interoffice code dialed,

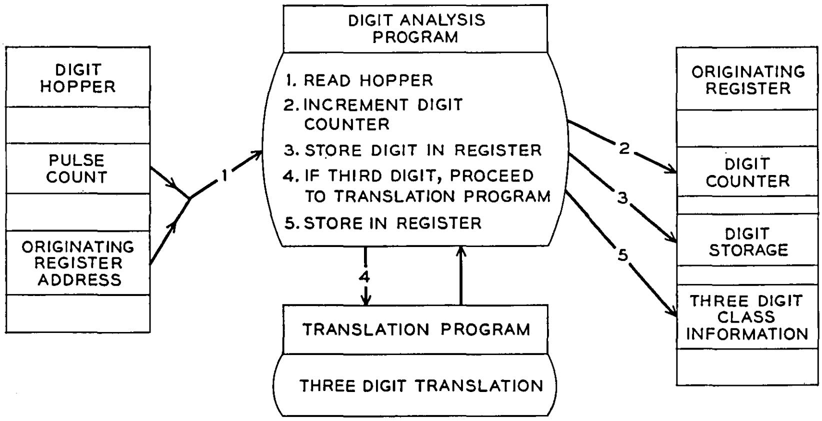

Fig. 24 — Analysis of third digit.

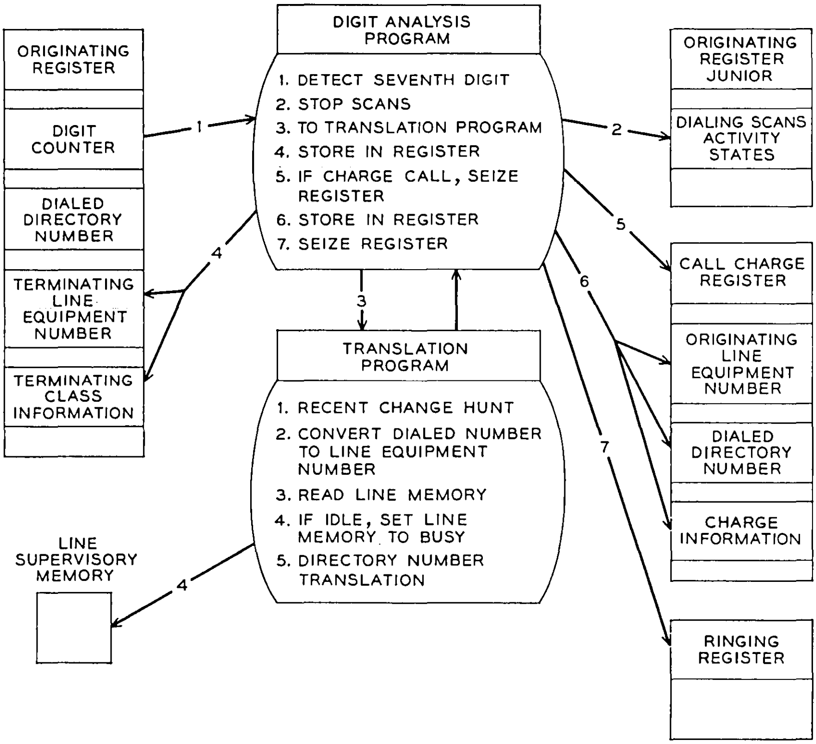

Fig. 25 — Analysis after end of dialing.

expect seven digits; (4) interoffice code dialed, expect ten digits; (5) intraoffice code dialed; and (6) charge call or free call.

5.3.3 *End of Dialing*

On the intraoffice call of this example, when the digit analysis program determines that the entry in the digit hopper is the seventh digit (as shown in Fig. 25), it shuts off the scan programs that detect abandon-interdigital time-outs, dial pulses, permanent signals, and partial dials by properly marking the originating register junior. The digit analysis program transfers to the translation program and requests a directory number translation. The translation program converts the directory number to a terminating line equipment number and terminating class. The translation program examines the terminating line's supervisory memory to see whether the line is busy. If idle, it marks the line supervisory memory busy and then extracts the directory number translation. The directory number class information consists of: (1) busy line found, (2) invalid number, (3) idle line found, (4) busy but special treatment, (5) temporary transfer activated, and (6) trunk group found. The translation program places this information in its buffer memory so that it can be passed to the digit analysis program, which in turn stores this information in the originating register. The digit analysis program determines whether it is a chargeable call. If chargeable, a call charge register is seized, initialized, and linked to the originating register. The digit analysis program stores in the call charge register the originating line equipment number, charge information, and the dialed directory number. The digit analysis program then seizes and initializes a ringing register, links the ringing register with the originating register and call charge register, and then transfers control to the ringing and answer detection program.

5.4 *Ringing and Answer Detection*

5.4.1 *Establishing the Ringing Connection*

The ringing portion of the ringing end answer detection program (as shown in Fig. 26) seizes and initializes a POB and transfers to the network control program after giving it the originating register and ringing register addresses. The network control program idles the receiver, seizes idle ringing and audible ringing tone circuits, hunts an idle path from originating line to the audible tone circuit, hunts an idle path from the terminating line to the ringing circuit, reserves a talking path between the originating line and the terminating line, and loads the POB with instructions to establish two connections. The first connection is from the originating line to the audible ringing tone circuit. The second is from the terminating line to the ringing circuit. It also stores the path memory specifying the above network configuration in the ringing register path memory annex. The network control program returns control to the ringing program, which requests the circuit control program to load the POB with instructions to control relays and scan actions in the two circuits. On return, the ringing program releases the originating register and activates the POB.

As shown in Fig. 27, after the POB execution program successfully executes the instructions, control returns to the ringing program. The final actions in establishing a ringing connection are to set the audible tone circuit supervisory memory in a state such that the trunk super-

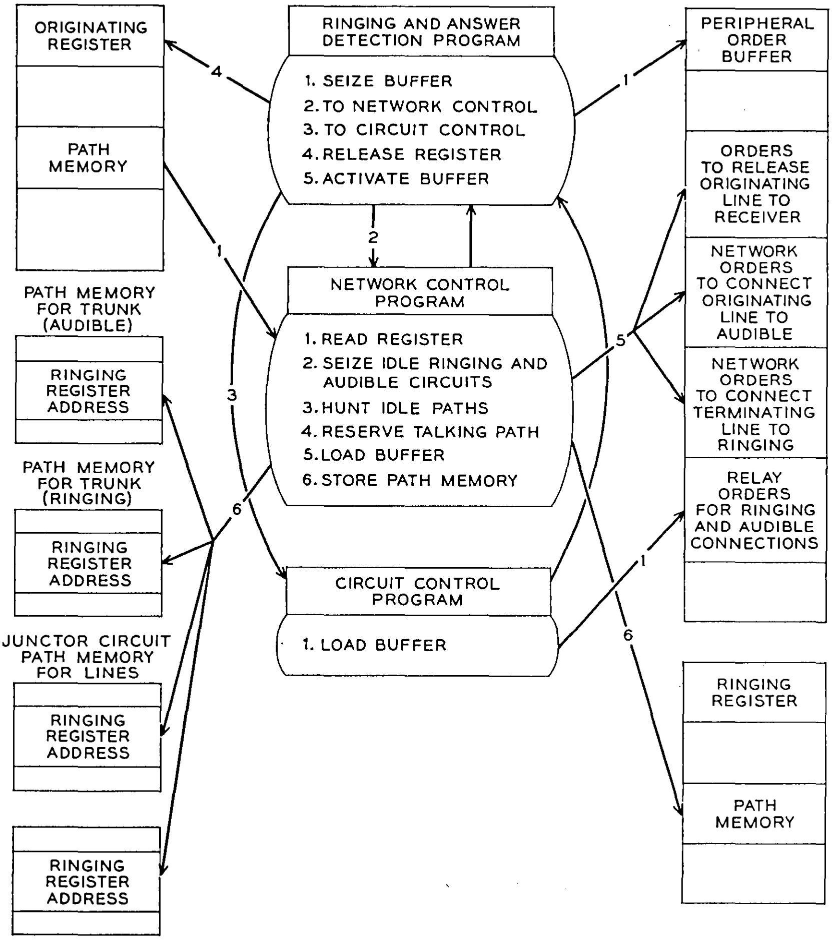

Fig. 26 — Initial actions for the ringing and audible connection.

visory scan program will detect a disconnect and the ringing circuit supervisory memory in a state such that the ringing trip scan will detect an answer by the called customer.

The successful execution of the POB actions in setting up ringing establishes the configuration shown in Fig. 28. The originating line is connected to an audible ringing tone circuit through the line link and trunk link networks; the terminating line is connected to the ringing circuit by a connection through the line link and trunk link networks; and a path through the line link network to a junctor circuit is reserved between the originating and terminating line. Supervision of the origi-

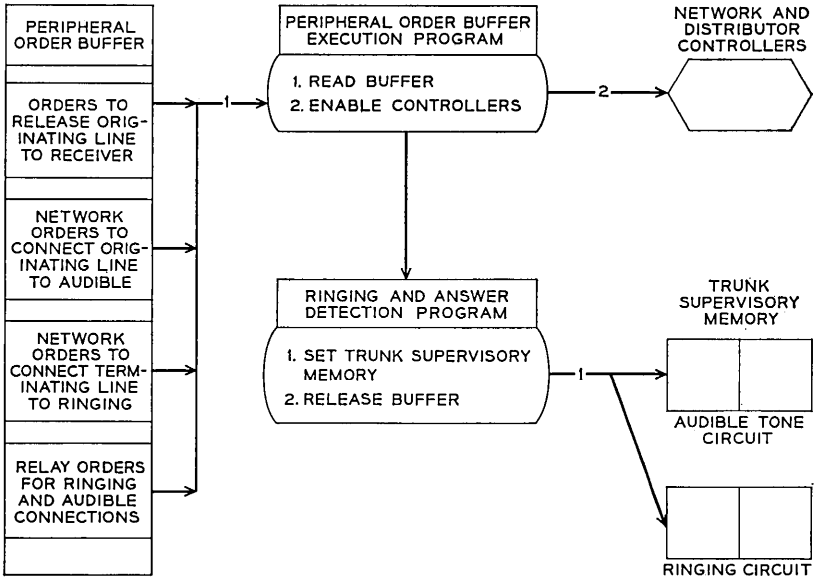

Fig. 27 — Final actions for the ringing and audible connection.

nating line is maintained at the audible ringing tone circuit, and the terminating line is supervised at the ringing circuit.

5.4.2 *Answer Detection*

The ring trip scan program (as shown in Fig. 29) examines the ring trip ferrod and the ringing circuit supervisory memory ten times per second. If the ring trip scan program detects the ring trip ferrod in an

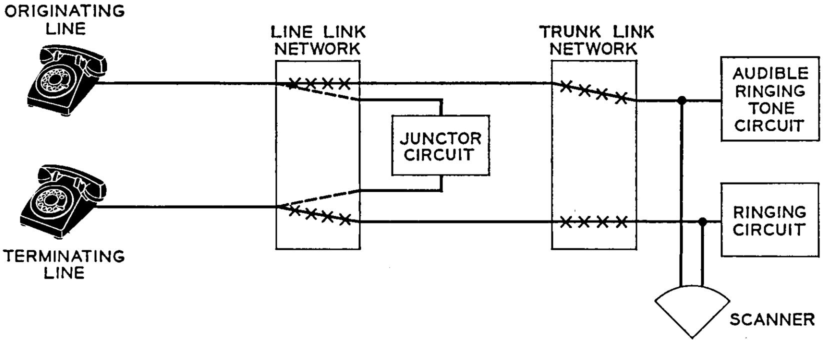

Fig. 28 — Ringing and audible connection.

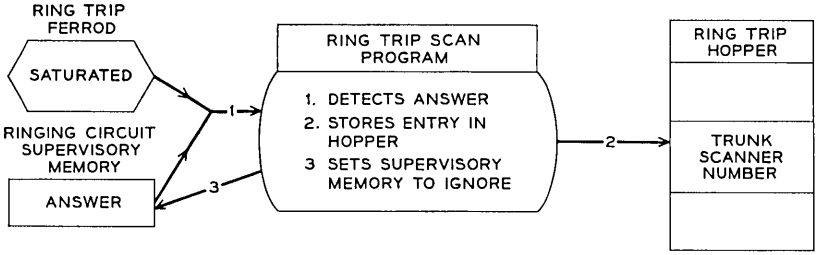

Fig. 29 — Detection of answer.

off-hook state and the ringing supervisory memory in an active state, it recognizes this condition as an answer. The ring trip scan program sets the ringing circuit supervisory memory to the ignore state and loads the trunk scanner number in the ring trip hopper. The answer detection part of the ringing and answer detection program (as shown in Fig. 30), when scheduled by the executive control program, examines the ring trip hopper. Upon detecting an entry, the answer detection program delivers the trunk scanner number to the translation program, which translates the trunk scanner number to its trunk network number and to the address of its associated path memory word. This information is then made available to the answer detection program. It seizes and initializes a POB and sets the audible trunk supervisory memory to the "ignore" state. It then transfers to the network control program, giving it the addresses of the ringing and call charge registers.

The network control program loads the POB with the instructions necessary to release the connection between the originating line and the audible ringing tone circuit, to release the connection between the terminating line and the ringing circuit, and to establish a talking path between the originating and terminating lines. The network control program also (1) idles the ringing and audible tone circuits (2), loads information associated with the talking path in the call charge register's path memory annex, and (3) places the address of this call charge register in the junctor's path memory words. The network control program then returns to the answer detection program, which requests the circuit control program to load the necessary relay and scan instructions to close the talking path. Then the answer detection program activates the POB.

As shown in Fig. 31, after the instructions stored in the POB are carried out, the answer detection program sets both sides of the junctor supervisory memory to busy, releases the POB, releases the ringing

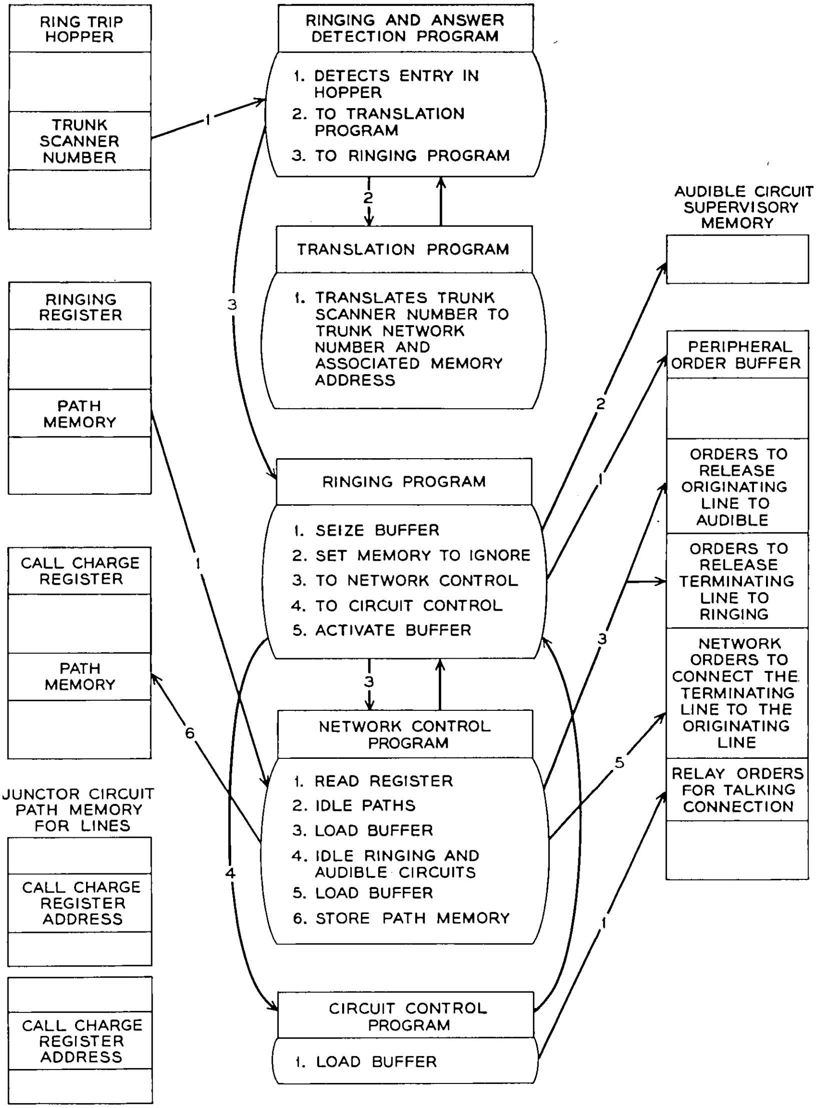

Fig. 30 — Initial actions for the talking connection.

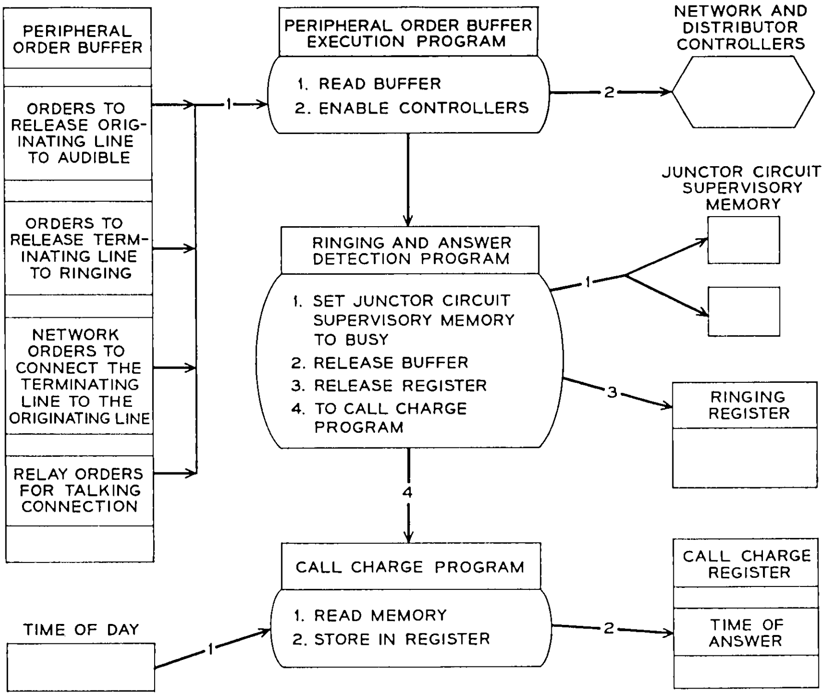

Fig. 31 — Final actions for the talking connection.

register, and transfers to the call charge program. The call charge program enters the time of answer (after reading the time of day) in the call charge register.

The talking connection between originating and terminating lines is established (as shown in Fig. 32) through the line link network. Super-

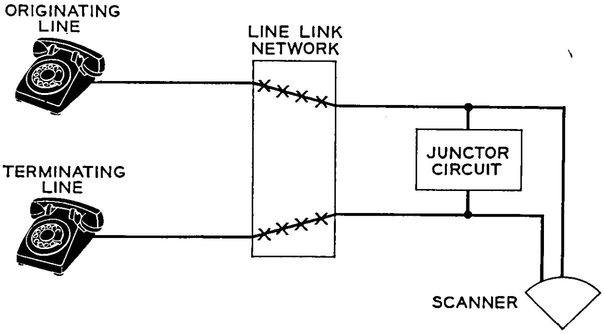

Fig. 32 — Talking connection.

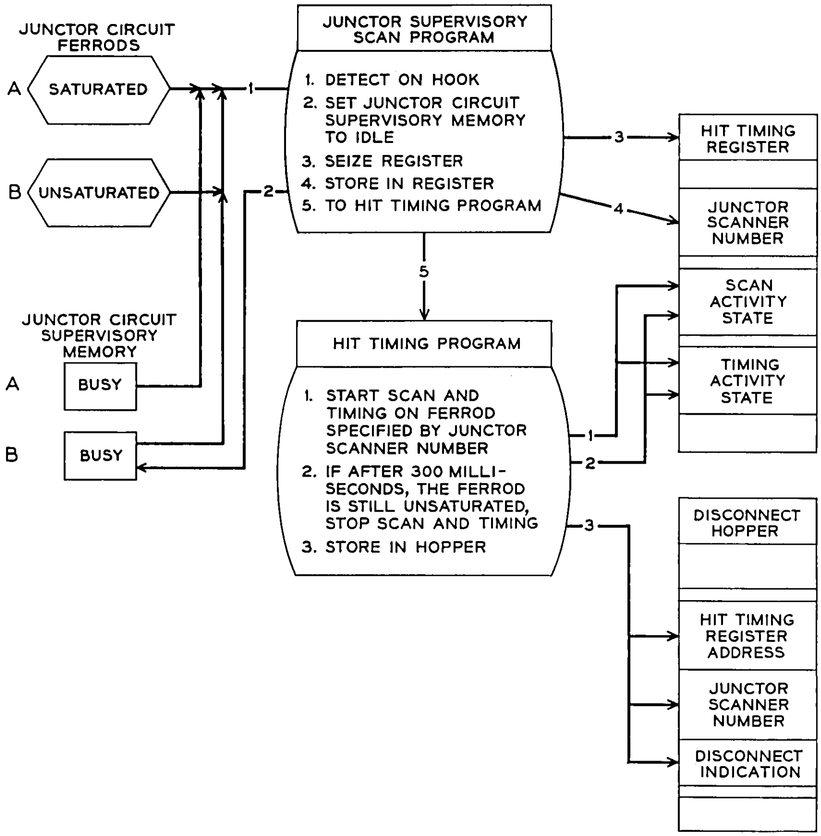

Fig. 33 — Detection of on-hook and hit timing.

vision of the originating and terminating lines takes place at the junctor circuit. The call charge register is in control of the call up to the time of disconnect.

5.5 *Disconnect*

Ten times per second the junctor supervisory scan program (as shown in Fig. 33) examines the state of the junctor ferrod and the junctor supervisory memory. If the junctor ferrod is unsaturated and the junctor supervisory memory (side B, Fig. 33) is in the busy state, the junctor supervisory scan program sets the junctor supervisory memory (side B) in the idle state. The junctor supervisory scan program then seizes and initializes a hit-timing register by placing the junctor scanner number in the hit-timing register to start a directed scan of the junctor ferrod.

Three hundred milliseconds after the initial entry is stored in the hit-timing register, the hit-timing program reads the ferrod specified by the scanner number, and, if the ferrod still indicates on-hook, it recognizes a disconnect. The hit-timing program enters the junctor scanner number, the hit-timing register address, and a disconnect indication in the junctor disconnect hopper.

Later, the disconnect program (as shown in Fig. 34) removes the entry from the junctor disconnect hopper and transfers to the translation program after giving it the junctor scanner number. The transla-

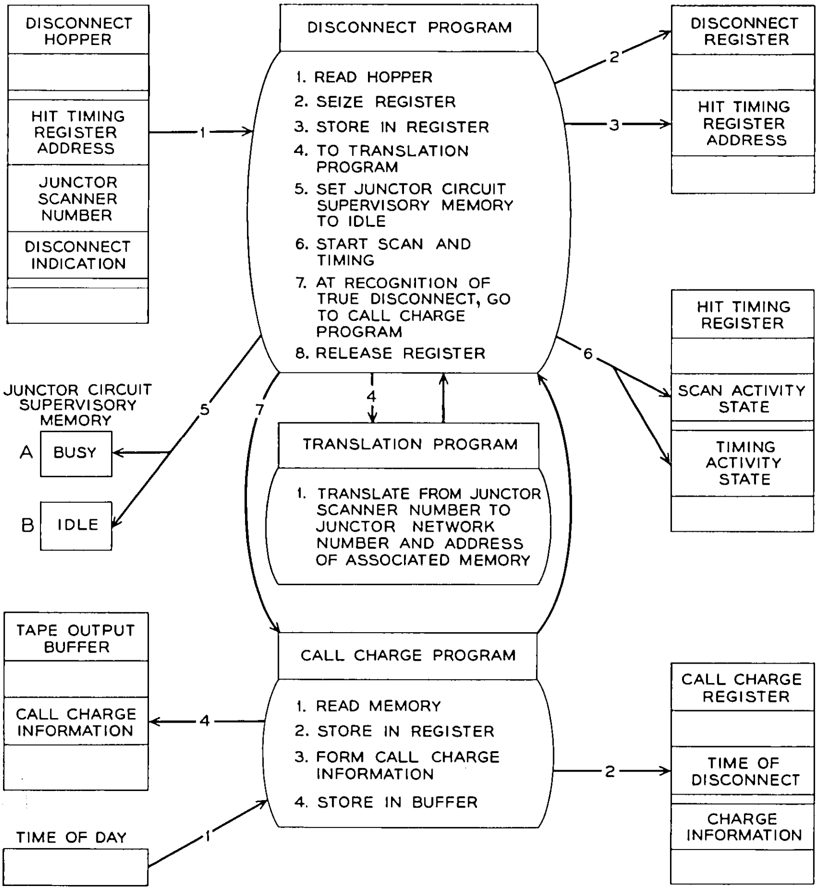

Fig. 34 — Detection of disconnect and charging actions.

tion program translates the junctor scanner number to the network numbers of the junctor terminals and obtains the addresses of the associated path memory. The translation program then returns these to the junctor disconnect program. The disconnect program seizes a disconnect register, stores in it the junctor network numbers and the hit-timing register address, sets the junctor supervisory memory (side A, Fig. 34) to the idle state, and links a disconnect register with the call charge register. The call charge then records disconnect time in the call charge register. From the call charge register the disconnect program determines that the originating customer has disconnected. The disconnect program also initiates directed scans of the both junctor circuit ferrods. If the called customer disconnects or the calling customer reoriginates before 10 to 12 seconds have elapsed, the disconnect program stops the directed scans, releases the hit-timing register and transfers to the call charge program after giving it the call charge register address and a disconnect indication.

The call charge program loads the charge information into the tape output buffer. The call charge program returns control to the disconnect program. As shown in Fig. 35, the disconnect program seizes and initial-

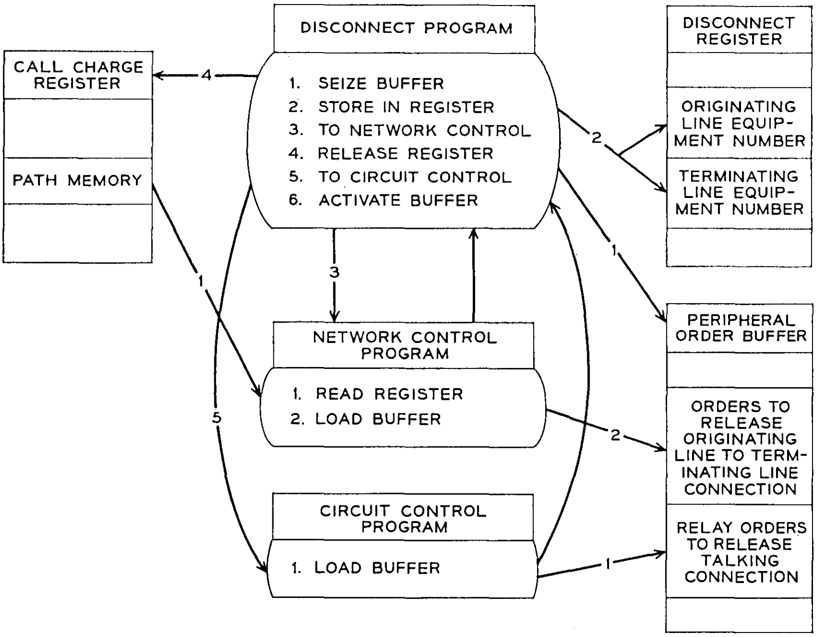

Fig. 35 — Initial disconnect actions.

izes a POB and transfers control to the network control program, giving it the call charge register address. The network control program loads the POB with the network actions necessary for restoration of the line ferrod. The network control program then returns to the disconnect program, which transfers to the circuit control program for the loading of the necessary relay actions. On return, the disconnect program releases the call charge register and activates the POB.

As shown in Fig. 36, after the relay orders stored in the POB are carried out, the disconnect program releases the POB and delivers to the translation program the originating and terminating line equipment numbers. The translation program converts the line equipment numbers to their line memory addresses and makes these available to the disconnect program. The junctor disconnect program sets the originating and terminating line supervisory memory to the idle state and releases the disconnect register.

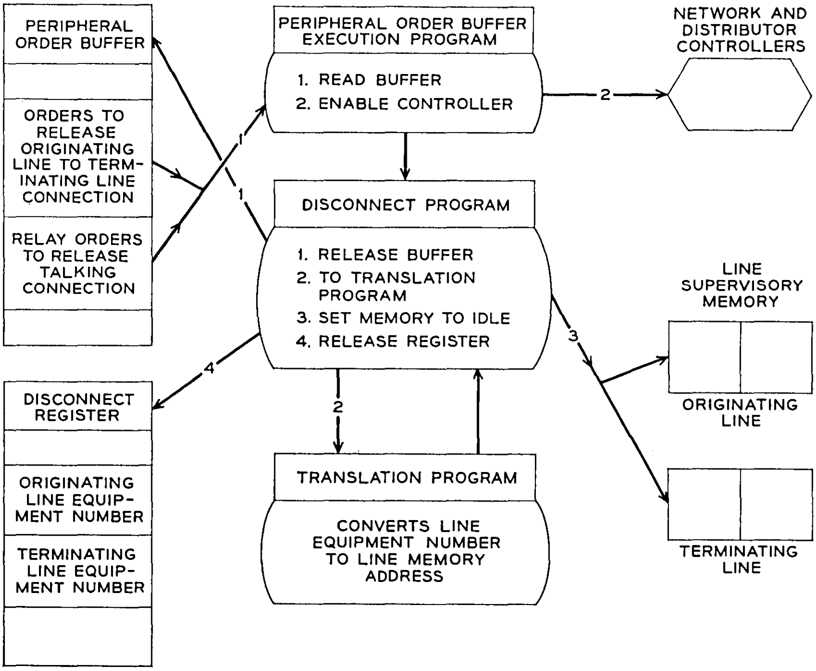

Fig. 36 — Final disconnect actions.

VI. CONCLUSION

The No. 1 ESS solves the problem of interconnecting telephone customers by centralizing the decision-making and the memory required to process telephone calls in an electronic data processor. As a result, trunk and service circuits have been greatly simplified.

The foregoing pages have described the manner in which the program, aided by circuits and by temporary memory, processes telephone calls. A simple intraoffice call has been used to illustrate the procedure followed in processing a particular type of call. However, the No. 1 ESS must offer many other services; hence programs must be provided to process other types of calls. The basic framework described here is supplemented in order to offer the full range of modern telephone services.

Although the variety of telephone services and equipment results in a large program to control the system, the use of a stored program offers an economical means to accomplish many present switching tasks and a flexible means for accomplishing the numerous future switching functions.

VII. ACKNOWLEDGMENT

Many of our colleagues have contributed to the planning necessary to implement call processing in the No. 1 ESS. Many of these contributions are discussed in greater detail in the other papers included in this issue of the Bell System Technical Journal. In addition, the authors acknowledge the work of numerous members of the systems engineering, program system design, and programming organizations concerned with the No. 1 ESS.

REFERENCES

1. Keister, W., Ketchledge, R. W., and Vaughan, H. E., No. 1 ESS System Organization and Objectives, B.S.T.J., this issue, p. 1831.
2. Biddulph, R., Budlong, A. H., Casterline, R. C., Funk, D. L., and Goeller, L. F., Line, Trunk, Junctor, and Service Circuits in No. 1 ESS, B.S.T.J., this issue, p. 2321.
3. Feiner, A., and Hayward, W. S., No. 1 ESS Switching Network Plan, B.S.T.J., this issue, p. 2193.
4. Freimanis, L., Guercio, A. M., and May, H. F., No. 1 ESS Scanner, Signal Distributor, and Central Pulse Distributor, B.S.T.J., this issue, p. 2255.
5. Harr, J. A., Hoover, Mrs. E. S., and Smith, R. B., Organization of the No. 1 ESS Stored Program, B.S.T.J., this issue, p. 1923.
6. Ulrich, W., and Vellenzer, Mrs. H. M., Translations in the No. 1 Electronic Switching System, B.S.T.J., this issue, p. 2533.

Translations in the No. 1 Electronic Switching System

By W. ULRICH and MRS. H. M. VELLENZER

(Manuscript received January 13, 1964)

Translations are the means of storing and retrieving office and customer information in a No. 1 electronic switching system installation. The translation scheme must be sufficiently general to handle special telephone services in addition to the items stored as cross connections in present telephone systems. The categories of translation information, the techniques of storage, the means for specifying translation data, and means for making changes therein, are described in this article.

I. INTRODUCTION

The information recorded in the storage or memory units of a No. 1 ESS office consists of four parts:

(1) the transient information about telephone calls in progress and the present state of all lines and trunks in the office,

(2) a program for controlling all system operations that is basically identical in all offices,

(3) a parameter table in the program store (semipermanent storage unit) containing certain information which varies from office to office and which changes only when major additions are made to an office, and

(4) translation information, which includes the bulk of the information that varies from office to office, some of which changes from day to day.

This article is concerned with the translation information and the portion of the program that is used to fetch and administer this information.

The following are the basic categories of translation information, described for the moment in simple form.

(1) Originating line translation: this translation indicates any special treatment of an originating subscriber, and specifies the directory number to be charged for his calls.

(2) Terminating translation: this translation specifies which terminating line should be connected to a calling customer or trunk when a directory number is dialed by the customer or received from an incoming trunk.

(3) Trunk translations: in the No. 1 ESS, a trunk distributing frame allows a trunk circuit in any frame to be connected to any position on the No. 1 ESS switching network. This requires a flexible trunk equipment location to trunk network position translation, as well as the inverse. In addition, the nature and complexity of miscellaneous trunk circuits and the fact that these trunk circuits are served by general-purpose (master) scanners (to detect conditions within the circuit), and central pulse distributors and signal distributors (to change relay states within the circuit) require a translation to let the ESS program know which of these are connected to a particular trunk circuit.

In addition, it is necessary to know which trunks belong to which trunk groups, since a trunk is usually seized because it is an available member of a desired trunk group.

(4) Office code translations: The first three digits of a dialed number must be interpreted to check for validity, detect intraoffice calls, and to select a route for interoffice calls. For some 10-digit calls, a 6-digit translation is necessary.

(5) Routing and charging translations: a route, as derived by the office code translation, is only a route pattern; this must be interpreted to find out which trunk group to use for an interoffice call, and how many digits to pulse forward to the distant office. In case all the trunks in this group are busy, an alternate route must be provided. If a coin zone call is made from a coin telephone, an indication must be sent to the operator so that she may quote the charge; for other charge calls, a "billing index" is recorded on an automatic message accounting (AMA) record along with other details of the call so that the customer will be charged the correct amount for the call. In addition, routing provides information as to the proper disposal of calls to vacant office codes, misdialed calls, incompletely dialed calls, and other similar situations whose treatment differs in different applications of the system.

In summary, translations make it possible for a general-purpose telephone call control program[1] to function in any central office, by providing in a standard form information specific to this office concerning directory numbers, office codes, line and trunk equipments, and routing and charging procedures.

The nature of the information provided by the translations requires that translation data be changeable. Translation data are stored on twistor magnet cards[2] in the program store. Current changes are received as messages from a teletypewriter (used as a major input to the system) and are then stored in the variable memory or call store; thereafter, they are periodically transcribed into the program store, using the program store card writer available as part of the master control center of every office.

The translation problem may be broken up into five parts.

(1) What translations must be performed? This problem will be discussed in terms of the input-output requirements of the ESS translation programs.

(2) In what format are translation data stored in the ESS? The method of storing translation data dictates the translation program, which interprets the translation data derived from the input quantity in such a way as to give the full required output to the telephone operational program.

(3) How are the original translation data specified by a telephone operating company? In this article we will describe some of the forms which have been developed to simplify the problem of specifying translation data. It is important that even the most complex translation items be easily specified.

(4) How are changes in translation data introduced into the system? The ESS program which accepts change data from a teletypewriter, converts these data into a form usable in the system and stores it in the variable memory or call store will be described.

(5) How do we transcribe revised and/or additional translation data into the semipermanent memory or program store from the call store? The process of adding, revising, and deleting translation information in the program store will be described.

II. THE CHARACTERISTICS OF THE TRANSLATION PROGRAM

The translation program (see Fig. 1) is a collection of related subroutines. It is requested by a call control program whenever the latter requires information about a specific item, called the "input parameter" to the translation program. These input parameters are stored in a central control register at the time the translation program is entered. Within one category, such as line translations, there exist a number of input situations, usually specified by entering the translation program at a different entrance point. Whenever the translation program has finished its work, it transfers back to the requesting program. In accomplishing its task, the translation program records its output information

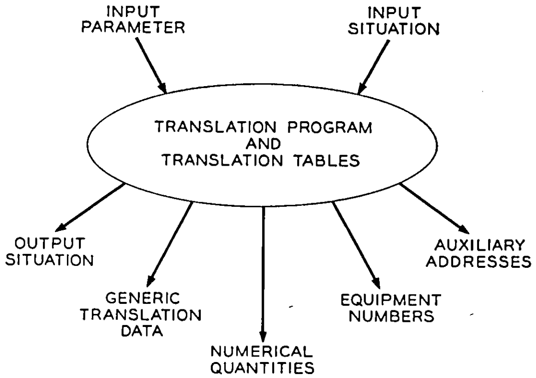

Fig. 1 — Input-output description of translations.

in central control registers and in fixed locations of the call store. If it recognizes an unusual situation, it modifies its return point in the program that requested the translation. The outputs are of five kinds:

(1) Special output situations are the result of finding a special condition as a result of making the translation. For example, if we are making a directory number translation and we find the directory number is unassigned, we wish to indicate that the call should be routed to an intercept operator; we indicate this and other special output situations by modifying the program address to which we return after completing the translation program.

(2) Equipment numbers are the binary addresses required to select a line or trunk network appearance, to operate a relay using a central pulse distributor or signal distributor, or to read a line or trunk scan point.

(3) Numerical quantities such as directory numbers, trunk group numbers, billing indices, and route pattern numbers have the same number of bits and format in all offices; the same quantity may eventually lead to different actions in different offices.

(4) Generic data are nonnumeric output information having the property that a particular binary configuration has the same meaning in all offices. For example, part of the output data from a line equipment translation made in response to a service request is the information concerning whether this is a two-party line and whether it has a TOUCH-TONE subset; to provide this information, a particular group of output bits exists which can be interpreted in the same manner by the call control program in any office.

(5) Auxiliary addresses are program store or call store addresses at which translation information may be found. Sometimes it is more convenient to give as an output the address at which information may be found than it is to give the information. For example, if part of the translation is a list, such as an abbreviated dialing list, it would be impractical to copy the entire list at the time an originating translation is made. Instead, the auxiliary address provides the means for finding the right item in this list at the proper time in the call. The information stored in the block specified by an auxiliary address may consist of generic data, equipment numbers, numerical quantities and auxiliary addresses.

The above is a summary of the characteristics of the translation program in terms of inputs and outputs. The program itself is mainly a series of table look-ups, simple data conversions, and checks for special auxiliary data. Because translations are made so frequently, it is important that the translation program consume minimum time. Because of the volume of translation data, it is important that it be densely and efficiently packed. Because of the large number of required variations in operation and because of the unknown requirements of the future, it is important that the translation scheme be flexible and have ample room for growth of features and services.

The translation program must work with a mixture of data in the call and program stores. The call store contains translation changes representing items of data, such as the class of new customers recently connected to the system, which must be up-to-date but which have not yet been transcribed into the program store. The program store contains the bulk of translation data, including, unfortunately, whatever information has been rendered obsolete by the new information in the call store. The translation program must provide the up-to-date data to the telephone program.

Numerical quantities as defined previously exist in the system; these pose a problem for the program. We must ensure that numerical quantities are never directly examined but are either recorded without examination or are merely stored to act as inputs for a subsequent translation. This makes it possible for all translation outputs to be handled in a standard way in all offices. For example, one part of the line class of service is a numerical quantity representing specialized call routing for this class of service. This quantity may be different for the same general class of service — e.g., PBX toll diversion beyond two message units — in different offices. (The types of classes of service required are too diverse to make the number of a particular class standard in all offices without incurring a heavy economic penalty in all offices.) However, this presents no problem to the office program because it never examines this part of the class of service; it merely stores it, later uses it as an input parameter for the routing translation, and then receives modified routing data. The translation *program* is insensitive to the value of numerical quantities.

III. INPUT-OUTPUT DESCRIPTION OF TRANSLATIONS

3.1 *Line Translations*

The input parameter for line translations is the line equipment number, which is the network appearance of the line in question. The chief outputs are the directory number (a numerical quantity) and the class of service, a combination of a numerical quantity and generic data.

The generic class data consist of a 6-bit major class word, plus a group of bits representing the presence or absence of some particular service or feature, such as a TOUCH-TONE subset, abbreviated dialing, call transfer, dial add-on, etc. (Space exists for many more bits than have yet been assigned to features or services.) The major class represents mutually exclusive aspects of the class of service, such as denied, unassigned, two-party, manual originating, multiline hunting group, or coin. The code for a major class is standard in all offices.

The numerical part of the class of service is a 10-bit number representing the specialized charging and routing or CHART (CHArge and RouTe) class. As previously mentioned, this number is used as an input parameter for routing translations.

Because two-party lines require more complex translation data (two originating classes, two directory numbers per line), an auxiliary address is part of the translation output of a two-party line translation. This auxiliary address is later used along with the party indication as an input parameter to a special translation program for obtaining the originating class of service of the particular party, as contrasted with the particular line.

In the discussion on multiline hunting groups (MHG)* in the directory

---

* We use the term MHG to refer to a method of selecting an idle line from a group in the central office, as distinguished from the term PBX, which refers to a type of equipment on the customer's premises. In general, an MHG is connected to a PBX on the customer's premises, but some of the smaller PBX's are treated at the central office as a series completion group. Series completion is handled at the central office by attempting sequentially to connect to a series of directory numbers. The main attribute of an MHG is that one directory number may be associated with many lines.

number translation below, it will be seen that each line in the MHG has a special busy-idle bit in the call store, grouped within a series of such bits associated with the MHG. If an MHG line originates, the translation program automatically busies the special busy-idle bit. (The service request detection program[1] has already marked the regular busy-idle bit busy, but that program has no way of knowing that the requesting line was in an MHG or, if so, which line within which MHG.) Thus, an MHG line can be treated very much like a regular line by the service request processing program.

If a customer has abbreviated dialing and dials an abbreviated code, the translation must provide the directory number corresponding to that code.

If a customer is connected to certain auxiliary equipment, such as an answering service, a special sleeve lead* condition must be created in an auxiliary line circuit to control this equipment. The sleeve lead represents the busy-idle state of the line. When the customer goes off-hook, this sleeve lead must be grounded by operating a relay. Since the conventional No. 1 ESS line circuit does not provide such a relay, nor the means for controlling one, a special relay in the auxiliary line circuit controlled by a general-purpose output of a signal distributor is used for applying the ground to the sleeve lead. The translation must provide the indication that such an auxiliary line circuit must be controlled (this is one of the bits of generic class data) and must provide the equipment number of the signal distributor point used for controlling this circuit.

A 3-bit disconnect guide is retained throughout the call. Two of the bits refer to specific situations, coin and add-on privilege. The latter requires timing to distinguish between a flash and a disconnect, since a flash is a signal to request a dialing receiver so that another telephone may be dialed and added to the present connection. The third bit is general-purpose and indicates that some special action is required at disconnect time, the special action to be indicated by the translation. Included in this category are lines with sleeve lead circuits (idle must be restored by releasing the relay) and multiline hunting group lines (MHG busy-idle bit must be restored).

A number of special output situations also exist in line translations. The output situation problem is handled as follows:

---

* In electromechanical systems, the sleeve lead is a third wire of the connection within the office. The auxiliary equipment can be connected to this point. Every effort was made to make the No. 1 ESS compatible with present customer station equipment.

Suppose there are four special output situations in addition to the normal output situation. The program requesting the translation then places four transfer instructions to the programs corresponding to the four special situations, immediately followed by the program for handling the normal case. Special output situations are discovered in the course of making the translations; the requesting program must be prepared to encounter these situations. The translation program will transfer back to the return address (J)* for the first special situation, to (J) + 1 for the second situation, (J) + 2 for the third situation, (J) + 3 for the fourth situation and (J) + 4 for the normal case. (This avoids the execution time of an extra transfer in the normal case.) This scheme permits several programs to request a particular translation and to have a standard method of handling special output situations that are signaled by the translation program.

The special output situations are as follows:

(1) Unassigned line originates.

(2) Line from master control center originates. Dialing from this line has completely different meaning than dialing from a customer's line.

(3) Line marked in trouble originates. This may well be the signal that the trouble has been cleared and that the line is now also available for terminating calls. The temporary translation routing calls for this number to an operator or announcement will have to be cleared if the subscriber actually dials.

3.2 *Directory Number Translations*

The input parameter for directory number translations is a directory number. A directory number translation is made only when it is already known that the call terminates in the local central office. The directory number is in one of three versions:

(1) Normalized office code plus four binary-coded decimal digits. A *normalized office code* is a 5-bit number representing a particular 3-digit office code of the many that may be handled by one ESS; each of these 3-digit codes corresponds to a different normalized office code. The normalized office code is obtained from the office code translation made when a local subscriber dials a full 7-digit number, or when an incoming trunk sends a full 7-digit number.

(2) Four or five binary coded decimal digits plus the class of an incoming trunk. These must be interpreted to derive the implied normalized office code for this trunk. (Communication of directory numbers

---

* The J register[3] is used to store the return address. It is set up via the J option at the time of the transfer to the translation program.

among central offices is frequently accomplished by sending only the last four or five digits.)

(3) Standard ESS format, consisting of a 10-bit quantity representing the binary version of the hundreds, tens and units digits, and a 7-bit quantity representing the *number group number*, the identification of the group of 1000 directory numbers to which this directory number belongs. This format might have been derived from an abbreviated dialing translation or from a call transfer translation.

The object of the directory number translation is to find the equipment location of a line associated with the called number and to provide any special information necessary to complete a call to such a line. The directory number translation program checks the busy-idle bit associated with the called line and, if it is idle, marks it busy. If the line associated with the called directory number is busy and has the series completion feature, the translation program will try the directory number to which the called line series completes. If the called directory number has the call transfer service in effect, calls will be transferred to a different directory number; if the latter is not in the local office, the translator output is simply the directory number to which the call is to be transferred.

For any call that can be completed in the local office, the directory number translator returns the line equipment number and the terminating class of either the called subscriber or the line to which his call has been switched because of series completion or transfer. The terminating class information consists entirely of generic data. It consists of a 6-bit major class word having the same meaning and coding as the originating major class word, an indication of the type of ringing signal to be applied, and an additional group of bits representing the presence or absence of particular terminating features and equipment, such as ground start, series completion, and call tracing.

If the directory number is that of a multiline hunting group, the directory number translation hunts for an idle line in the group. The equipment number is then that of the idle line, while the class is that of all the lines in the group. The translation program marks the idle line busy. Subsequent terminating call actions are similar to those for calls terminating to individual lines.

If the called line has an auxiliary line circuit, then the address of the signal distributor point for operating a relay to apply ground to the sleeve lead is provided by the translation.

In addition to the normal case of a line found and available, four special output situations exist:

(1) called line busy

(2) called directory number unassigned; route to intercept

(3) called directory number is associated with a trunk group. This will happen for official numbers that are associated with operator trunk functions.

(4) called directory number has transferred its calls to a number outside this central office. The new directory number is provided as the output of the translation.

3.3 *Office Code, Routing, and Charging Translations*

The office code, routing, and charging translations are probably the most complicated of the translations which occur in the ESS. From an input-output point of view, an office code is given and full routing and charging information is supplied. Internally, a number of translations take place before these final results are given.

A special attribute of office code translations is that the translation depends not only on which number was dialed, but on who dialed it. The chart class of the originating customer will have an effect on the routing and charging. For example, a customer whose toll calls are denied will clearly have a different route when he tries to dial a toll call than a regular individual service customer. Similarly, a customer on a four-party line, who, when making a toll call, must be routed via a centralized automatic message accounting office in order to have his directory number requested by an operator, may well be routed differently than an individual or two-party customer making the same toll call. While these unusual routings are fortunately the exceptions, it does mean that fundamentally the translation consists of finding the appropriate data entry in a two-dimensional, rather than one-dimensional, matrix.

The situations described above could, of course, be handled by program means alone. For example, it would be possible to check if the customer has toll denial, and if so, to see whether this is a toll call, or to check whether the customer is on a four-party line, and if he is, check to see if this is a toll call. But such a scheme would lack flexibility. It would not be prepared for unexpected situations. The more generalized approach uses less real time and is able to handle unexpected situations provided the latter do not exceed the limitations of the overall plan.

As mentioned previously, that aspect of a customer's class of service which affects the routing of his calls is the chart class. A chart class is a 10-bit number; thus the number of chart classes is limited to 1024.

The office code, routing and charging translations are shown diagrammatically in Fig. 2. The memory layouts of office code translators are

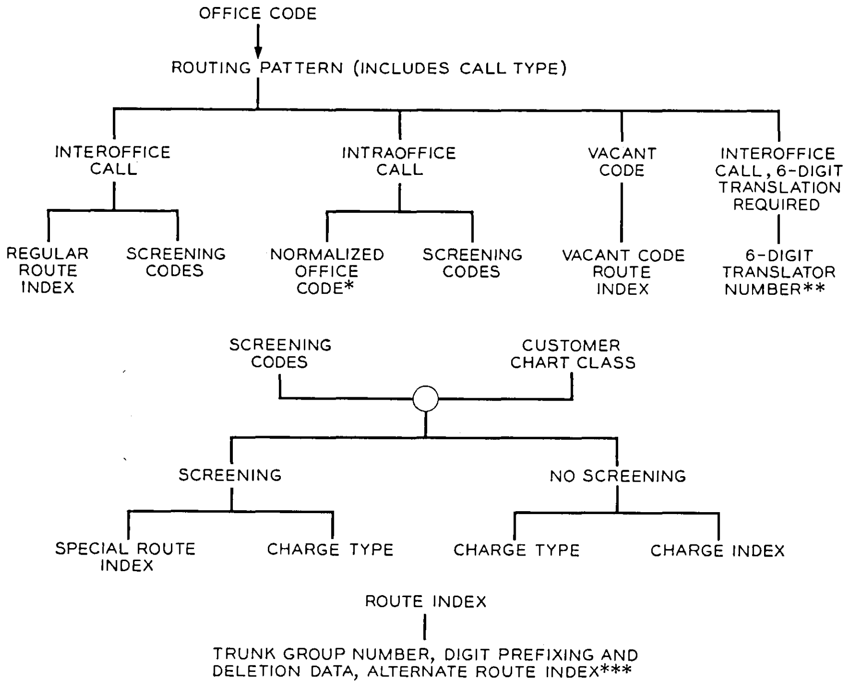

*USED FOR SUBSEQUENT DIRECTORY NUMBER TRANSLATION

**USED FOR A SUBSEQUENT TRANSLATION; IN THIS TRANSLATION DIGITS 4,5 AND 6 WILL BE USED AS AN INDEX IN THE SPECIFIED TRANSLATOR TABLE

***USED IF ALL TRUNKS IN THE SPECIFIED GROUP ARE BUSY; THIS ALTERNATE ROUTE INDEX IS THEN TRANSLATED IN THE SAME WAY AS THE ORIGINAL ROUTE INDEX, AND MAY LEAD TO FURTHER ALTERNATE ROUTING

Fig. 2 — Office code, routing and charging translations.

discussed more fully in Section IV, and are shown in Fig. 7. Associated with each office code is a routing pattern. The route pattern first identifies the category of the call, i.e., vacant code, intraoffice, 7-digit interoffice, 10-digit interoffice, 3-digit call, etc. For interoffice codes, this routing pattern gives a regular route index and a series of 15 screening codes corresponding to 15* divisions of the chart classes, or charts. A route index is a number which implies a trunk group plus appropriate digit deletion and digit prefixing information, plus another route index for alternate routing in case the first trunk group is busy. By proper linkage of route indexes, it is possible to create any desired pattern of

---

* The number 15 is an engineering compromise between a larger number, which would cost extra memory per route pattern, and a smaller number which might excessively limit the screening flexibility.

alternate routing among different trunk groups used for different destinations. A regular route index is used for this call provided no screening takes place. If screening takes place, a special route index will be found and substituted for the regular route index.

Associated with each chart class is a list of 32 or 64 special route indexes or charge indexes.* The route pattern will contain a screening code for each chart. The translation program will then take the screening code associated with the particular chart of which this subscriber's chart class is a member, and if that screening code is n, will read the nth word of the chart class table. This nth word will either provide a substitute or special route index, or it will provide a charge index to be transcribed on the AMA tape. In either case, a charge type is also found. A charge type indicates such items as whether the call is free, whether a detailed AMA entry (including both the calling and called subscriber's directory number) or bulk AMA entry (including only the calling subscriber's number) will be made, whether the entry must include the length of time of the call or whether an entry may be made as soon as the called subscriber answers.

The office code translation must also provide information as to whether overlap outpulsing is used on the route associated with this call. If overlap outpulsing is to be used, it means that pulsing to the distant office must start after the subscriber dials his hundreds digit, i.e., before he has finished dialing. This means that the connection for outpulsing must be set up before the normal time.

The office code translation program must also take into account the question of whether a subscriber dialed a prefix that he was not supposed to dial, or failed to dial a necessary prefix. The standard prefixes of the future in the Bell System are a 1 for station-paid toll calls and a 0 for person-to-person and special calls. However, not all customers will have the same rules for dialing a prefix 1; for example, dial TWX customers may not have to dial a 1 for toll calls, whereas regular customers will have to dial this 1. We must route the call to an appropriate announcement if the 1 is omitted in dialing by a regular customer.

For an intraoffice call, the office code translation must provide the normalized office code of this call. This is a necessary input for subsequent directory number translations (see above). For interoffice calls, if a 6-digit translation is required, the office code translation must provide the number of the table containing this particular 6-digit translation. Subsequently, a translation will be performed using this table, with digits 4, 5 and 6 as the index within the table, since digits 1, 2 and 3 have

---

* The following description is further clarified in Section IV and Fig. 9.

already been used in the first translation to select the table. (Prefix 1 or 0 is not counted as a digit in the above discussion.)

3.4 *Trunk Translations*

Fig. 3 gives a diagram of the required trunk circuit translations. There is a significant difference in the required translations between universal trunks and miscellaneous trunk and service circuits. With a universal trunk circuit, a trunk scanner number implies a trunk signal distributor number; universal trunk circuits do not have any associated central pulse distributor points, since one of the requirements of a universal trunk is that it contain only signal distributor controlled relays. Translations must be made from trunk scanner number to trunk network number and vice versa.* The trunk scanner number is the source of information concerning a seizure or disconnect. The trunk network number must be obtained in order to set up a connection to this trunk circuit. A translation from trunk network number to the trunk scanner and signal distributor numbers is required in order to operate the trunk circuit relays when we have seized a particular trunk on the basis of a

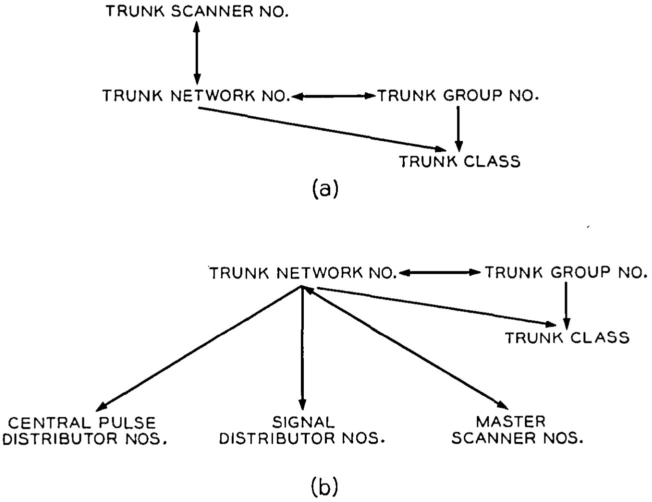

Fig. 3 — Trunk translations.

---

* A trunk distributing frame is interposed between the trunk switching frames and the trunk frames, so that any trunk equipment may be connected to any trunk network appearance.

hunt based on network numbers. A translation from trunk network number to trunk group number is required, since the administration of available trunks within a group is made on the basis of the trunk group number. We must be able to find the class of any trunk, and this is done most conveniently by having a translation from the trunk group number to class and from the trunk network number to class.

For miscellaneous trunk circuits the same basic translations are necessary with the following additions: since the master scanner is used for miscellaneous trunk circuits, it is necessary to substitute a master scanner to trunk network number and reverse translation for the original trunk scanner to trunk network number translation. Because the miscellaneous trunks and service circuits are controlled from signal distributor and central pulse distributor points which have no relation to the master scanner number, a translation is required to find the signal distributor and central pulse distributor numbers necessary for controlling a particular trunk circuit.

The trunk class is in a standard 4-word array. The trunk class words are:

(1) common and outgoing information
(2) incoming information
(3) special operator options
(4) trunk circuit program index.

The fourth word contains the trunk circuit program index. This is an indication to the program of the type of trunk circuit; each type of trunk has a different index. The third translation word contains special operator options indicating such items as the type of coin control action to be taken with this trunk. The second word contains incoming information, including the number of digits to be received, the type of incoming pulsing, and whether a start dial signal is expected; for the case of trunks with 4-digit incoming pulsing, a normalized office code is required to steer the call to the proper office code if the particular ESS installation handles more than one office code. The first translation word contains common and outgoing options such as the type of supervision on the trunk, the type of pulsing, the type of trunk circuit (incoming, outgoing or two-way) and details on the form of the outpulsing (for example, start dial signals on dial pulse outpulsing).

Presumably, the trunk class information for any particular trunk takes much less than four words. However, since the number of different trunk classes in any office is relatively small, the gain in having a standard program which will always know what information to expect in a particular bit is greater than the loss of having an unnecessarily large area of memory devoted to the trunk class detailed information. For a particular trunk group, a code is stored which is expanded into the 4-word array; the 4-word block is stored in memory only once if two trunk groups have the same class.

Other translations associated with trunks include the hunt for an idle trunk. In the case of the directory number translation, it is convenient for the translation program to make the busy check because the translation program has all necessary equipment numbers already generated. It is equally convenient for translations to make the hunt for an idle trunk and to make such a trunk busy, to hunt for an outgoing transmitter associated with a particular trunk, to hunt for an idle terminal in a conference trunk, and to restore trunks in memory to the idle state after a disconnect or after the discovery of a blockage in the network.

Table I summarizes the universal trunk translations required for an incoming call. The call is detected by means of a seizure signal recognized by a trunk scanner. The trunk scanner address must be translated to find the trunk network number, so that a receiver may be connected to the incoming trunk. In addition, the class of the trunk must be derived, so that the proper receiver may be connected. The trunk class is derived by translation from the trunk network number. The trunk class also indicates how many digits are expected over this trunk. Finally, the trunk class is also needed to give the call processing program which controls the trunk circuit relays the necessary information as to the type of trunk involved. This information is given in the form of a circuit program index, an identifying number unique to each particular type of trunk circuit configuration. Finally, the trunk network number is used to permit the call processing programs to mark the appropriate path memory for all paths to be associated with this trunk during this call.

Incoming calls are not normally screened, because screening is per-

TABLE I — INCOMING CALL TRUNK TRANSLATIONS

Quantity	Function
Trunk scanner no. ↓	seizure or disconnect signal discovered at this scan point
Trunk network no. ↓	used for network path hunt and network memory changes
Trunk class code ↓	compact version of trunk class, used to find detailed trunk class information
Trunk class	used to determine the type of incoming receiver needed, incoming pulsing details, type of trunk circuit

formed at the originating office. The translation corresponding to an office code translation is merely one to find out which intraoffice code has been called so that the proper directory number translation may be made.

Disconnect is recognized by the scanner at the trunk circuit. It is again necessary to make a translation from the trunk scanner number to the trunk network number so that the disconnect signal may be associated with the proper path information; the trunk class must be found so that the trunk release operations may be controlled.

Table II summarizes the universal trunk translations necessary for an outgoing call. The trunk was initially seized because it was a member of the trunk group indicated by the route index which was found by the office code translation. For outgoing calls, the route index indicates the number of digits to be pulsed plus any digit prefixing information. The class of the trunk is necessary in this case primarily to select the type of transmitter to be used in connection with this outgoing trunk and to provide the circuit program index necessary to control this trunk.

In order to control a trunk circuit and in order to mark the trunk busy it is necessary to know the scanner number associated with the trunk; for this purpose, a trunk network number to trunk scanner number translation is necessary.

TABLE II — OUTGOING CALL TRUNK TRANSLATIONS

Quantity	Function
Office code	Dialed by customer
↓	
Route index	
↓	
Trunk group	
↓	
Trunk class	Used for selecting outpulsing transmitter, and indicating type of trunk circuit
Network number of idle trunk	Used for network path hunt and network memory changes
↓	
Trunk scanner number	Used for making scan point memory busy
⋮	
At disconnect time:	
Trunk scanner number	Disconnect detected at this scan point
↓	
Trunk network number	Used for making network memory changes at disconnect time
↓	
Trunk group number	Used for updating list of idle trunks in group
↓	
Trunk class code	Compact version of trunk class, used to find detailed trunk class information
↓	
Trunk class	Used to determine the type of trunk circuit

A disconnect may be initiated by either subscriber at the trunk circuit. A translation from trunk scanner number to trunk network number is necessary at this time to find the proper network path information, plus class.

3.5 *Miscellaneous Translations*

A number of other translations exist, not associated with the basic telephone operation. Some of these are for maintenance purposes. Alarm indications are connected to the master scanner; when such a scan point becomes active, a translation must be made to discover the meaning of this particular alarm indication. If a particular unit is being diagnosed for faulty operation, a list of the scan points for examining the maintenance outputs of the unit and a list of signal distributor and central pulse distributor points for applying test signals to that unit must be provided.

Translations must also be provided for the details of traffic counts peculiar to a specific office, including indications of which traffic counters are to be printed out on a teletypewriter.

In general, translations must provide information on any item that a telephone company may change on a day-to-day or long-term basis.

IV. MEMORY LAYOUT

A major aspect of the translation problem is that of storing the large volume of the translation data in memory. The design of the memory layout was influenced by three requirements:

(a) The data can be stored in either program store (PS) or call store (CS).

(b) The data must be densely packed in order to conserve memory space.

(c) The output of a translation must consist of generic data, equipment numbers, and numerical quantities.

Because of requirement (a), a 23-bit word was chosen as the basic translation word (TW). Its physical location is either a 23-bit CS word, the right part (23 bits) of a 37-bit* PS word, or the left parts (14 bits each) of two consecutive PS words. In the latter case, the first of the two words contains the 14 least significant, the second one the 9 most significant bits of the translation word.

An exception from the rule of the 23-bit translation word is found in abbreviated dial and transfer lists. It was found that 23 bits were inadequate, but 28 bits were adequate, for most entries in such a list. A

---

* Of the 44 bits in each program store word, 7 are check bits; hence only 37 useful bits of data are available in each word.

list word therefore consists of 14 bits; two such words form a list entry. Such lists are preferably stored in the upper or left bits of program store words. In the call store, such list words are stored in two 23-bit words.

Translation data exist in the PS as a collection of tables. The set of tables devoted to each type of input parameter is called a "translator." Corresponding to the various input parameter types, there are line equipment number translators, directory number translators, 3-digit code translators, trunk network number translators, etc.

Translators are composed of subtranslators, each subtranslator corresponding to a growth unit of the central office. For instance, there is a subtranslator per line switch frame, per trunk switch frame, per number group (i.e., block of 1000 directory numbers), etc.

Subtranslators are joined together to form a translator in the following way:

The binary representation of the input parameter is divided into two parts, the *subtranslator selector* identifying the unit and the *index* identifying the item within the unit. A head table contains the addresses of all subtranslators. The head table exists for the ultimate size expected for the particular central office, but only as many subtranslators are provided as have corresponding units, and new ones are added as the number of units increases (see Fig. 4).

A subtranslator is a table which consists of one translation word (TW) per index. This word, the primary translation word, contains either the complete data connected with the input parameter, or if one word is not sufficient, a reference address to an auxiliary block where the data are stored in auxiliary translation words. To make the recognition of auxiliary addresses possible, the complete data cannot start with three leading zeros; a word whose three leading bits are zeros is then interpreted as an auxiliary address.

The requirement for conserving memory space suggests the technique of using abbreviated codes for generic data. The call control programs which use translation need directly usable information. Therefore, generic data consist of separate groups of bits for each item described. The number of bits must be large enough to allow for all possible values of the data, whether they occur in a particular office or not. For instance, the type of outpulsing used on outgoing trunks is described in 3 bits to allow for all possible types of transmitters, although there might be only one type, multifrequency transmitters, in actual use. By listing the values of the generic data which occur frequently in a particular office and assigning consecutive numbers to them, one arrives at an abbreviated code for the actually occurring data combinations in a particular office. The detailed version of this data is therefore stored

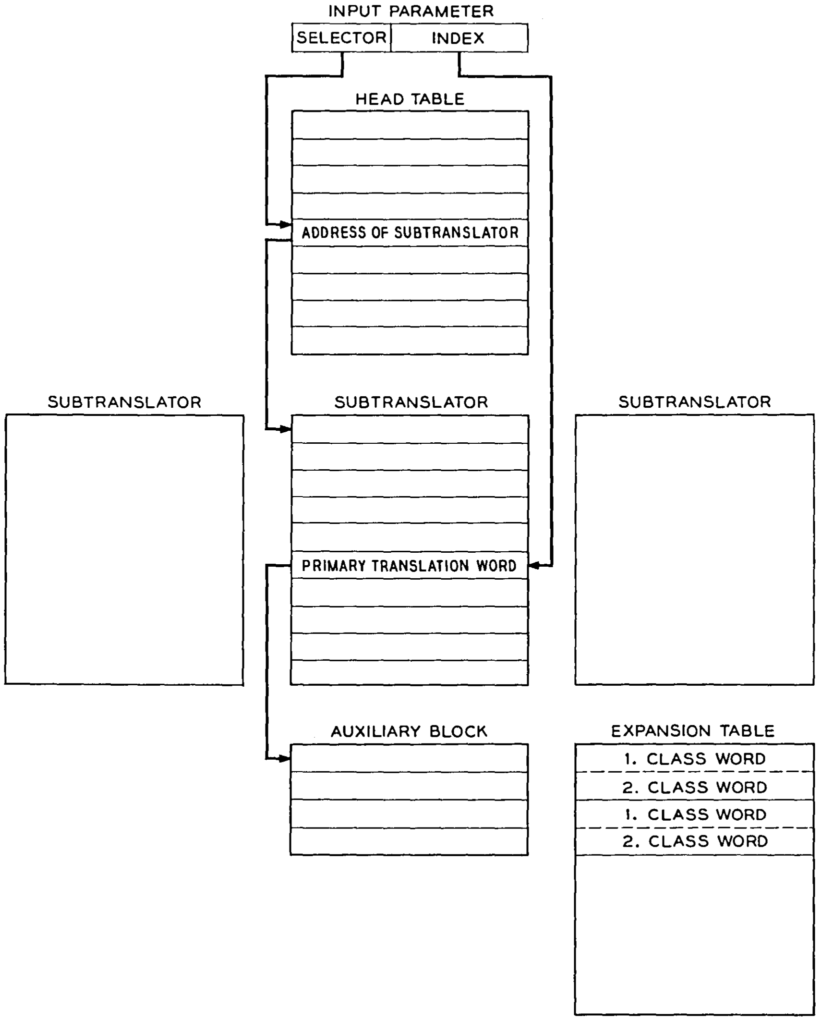

Fig. 4 — Pictorial description of a translator.

once in an expansion table; everywhere else the abbreviated code is stored. Since the call control programs are interested in generic data, the translation program expands the abbreviated code (which is not generic) before delivering it to the call control program.

Examples for the use of abbreviated codes are the line class of service, the trunk class, and the route index:

(a) Class of service includes equipment information, special service information, and routing and charging information. In the detailed form, it occupies two translation words. For a reason which will soon become apparent, the size of the abbreviated codes is limited to 6 bits, which makes it possible to use them for the 56* classes of service most frequently occurring in a particular office. Consequently, for many lines the primary translation word is sufficient to hold the originating information, i.e., the directory number (17 bits) and the abbreviated code (6 bits). Lines for whose originating class of service no abbreviated code exists need at least four words of storage, one for the auxiliary address, one for the directory number, and two for the class of service.

(b) The trunk class describes equipment and use of a trunk or service circuit. When spelled out in detail in the trunk class expansion table, the data occupy four translation words. However, the abbreviated trunk class code appearing in the trunk network number translator and the trunk group number translator is only 8 bits long, allowing for 256 different classes of trunks in a particular office.

(c) A route index is an 11-bit abbreviated code for a particular routing describing the first-choice trunk group, the alternate route and special treatment. The detailed route information, taking up two translation words each, is stored in the route index expansion table.

To summarize: a translator consists of a head table, one or more subtranslators, auxiliary blocks, and possibly expansion tables (see Fig. 4).

A detailed description of the line equipment number translator is given here as an example (see Fig. 5). It has four types of primary TW's:

(a) The TW contains an auxiliary address (complex class of service).

(b) The TW contains an abbreviated class code and a directory number (simple class of service).

(c) The TW contains the abbreviated code for MHG lines, the MHG number and the terminal number (i.e., the position in the multiline hunting list).

(d) The TW is zero (unassigned line).

The class expansion table contains two class words for each abbreviated code. They provide for the following categories:

(a) major class: a code for the mutually exclusive aspects of the class of service, as individual line, coin line, multiline hunting group, etc.

(b) feature class: a group of bits representing the presence or absence of some equipment and service features as TOUCH-TONE dialing, ground start, abbreviated dialing, variable or preset transfer, etc.

---

* 56 instead of 64 since codes 0 to 7 are not usable. Their binary representation, starting with 000, conflicts with the code for an auxiliary address.

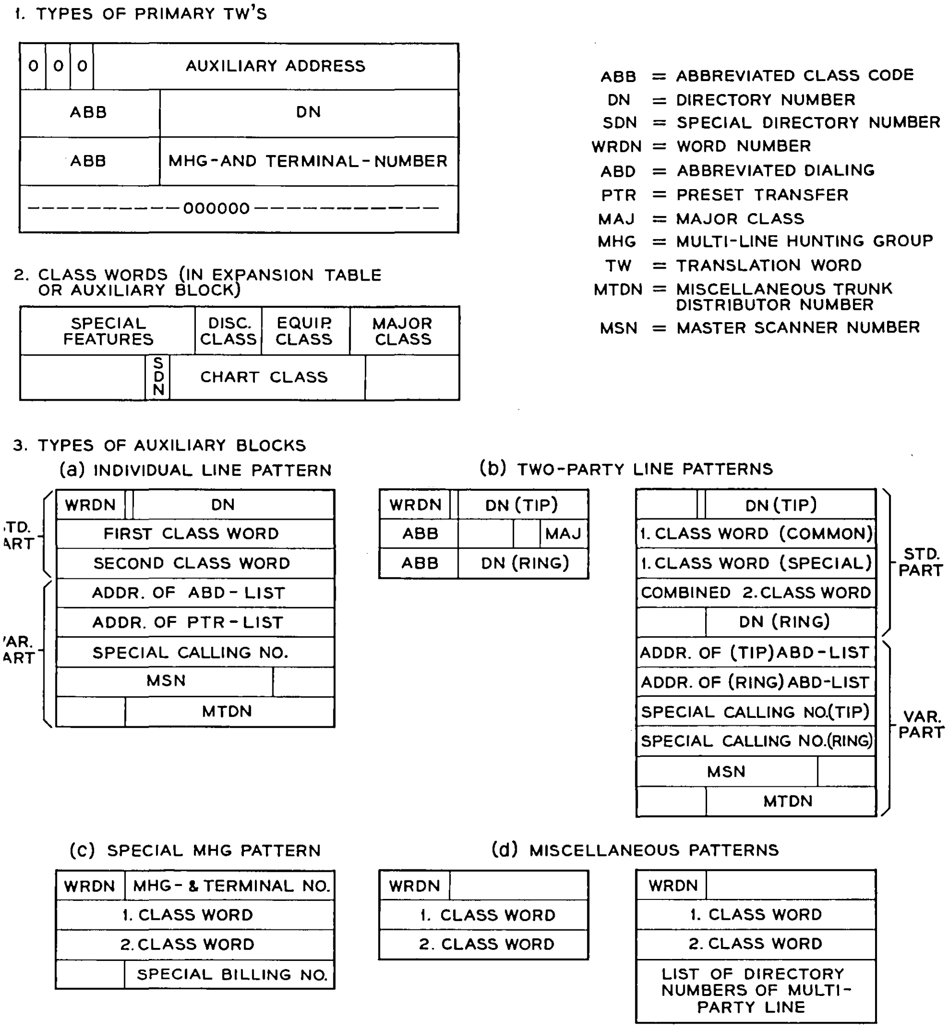

Fig. 5 — Data stored in line equipment number translator.

(c) chart class: a code representing the charging and routing directions

(d) disconnect class: a group of bits indicating the action to be taken at disconnect time.

The auxiliary blocks appear in several patterns:

(a) Individual line pattern: this pattern contains as the standard part the directory number and the two class words (which provide the same categories as those in the expansion table). The following variable part may be entirely or partially missing depending on the class of service. It contains successively the address of an abbreviated dial list, the address of a transfer list, a calling number which differs from the billing number, and sleeve lead auxiliary line circuit data.

(b) Two-party line pattern: this comes in an abbreviated and in an expanded form. In the abbreviated form, the pattern contains abbreviated class codes and directory numbers for both parties and, for reasons of expediency, the common major class and equipment features. In the expanded form, it contains the detailed data for both parties. The common equipment features and disconnect class are stored only once. The variable part of the pattern contains, if they exist, the addresses of the abbreviated dial lists both for tip and for ring party, special calling numbers for both parties, and the common sleeve lead data.

(c) MHG pattern: If a line from a multiline hunting group is not billed to the main directory number, or if its ground start feature differs from that of the majority of lines in the group, an auxiliary block is required which contains the MHG number, terminal number, two class words, and billing number (either special or common).

(d) Miscellaneous patterns exist for multiparty lines and the line from the master control center.

(e) Multiline hunting groups have their own miscellaneous translator. Its head table contains for each group, identified by its PBX number, the address of a common block. The common block contains the main directory number, two originating and one terminating class words, and the hunting list as a standard part. A variable part may contain the address of an abbreviated dial list, and/or sleeve lead data for an electromechanical overflow counter.

The office code translations require a number of special techniques in order to include the screening facility previously described. The translation memory layouts are shown in Fig. 6. The first step in making an office code translation is to find a route pattern number associated with each office code. This is done by looking in a table of a thousand office codes to find a route pattern number. Assume that the route pattern for a given office code is 41. Via the route pattern address table, this route pattern number is expanded into the address of the corresponding route pattern information. The route pattern information is a 5-word block. The first word contains a route index (the standard route index) and the call type information. The next 4 words contain 15 screening codes corresponding to the 15 charts or divisions of chart classes.

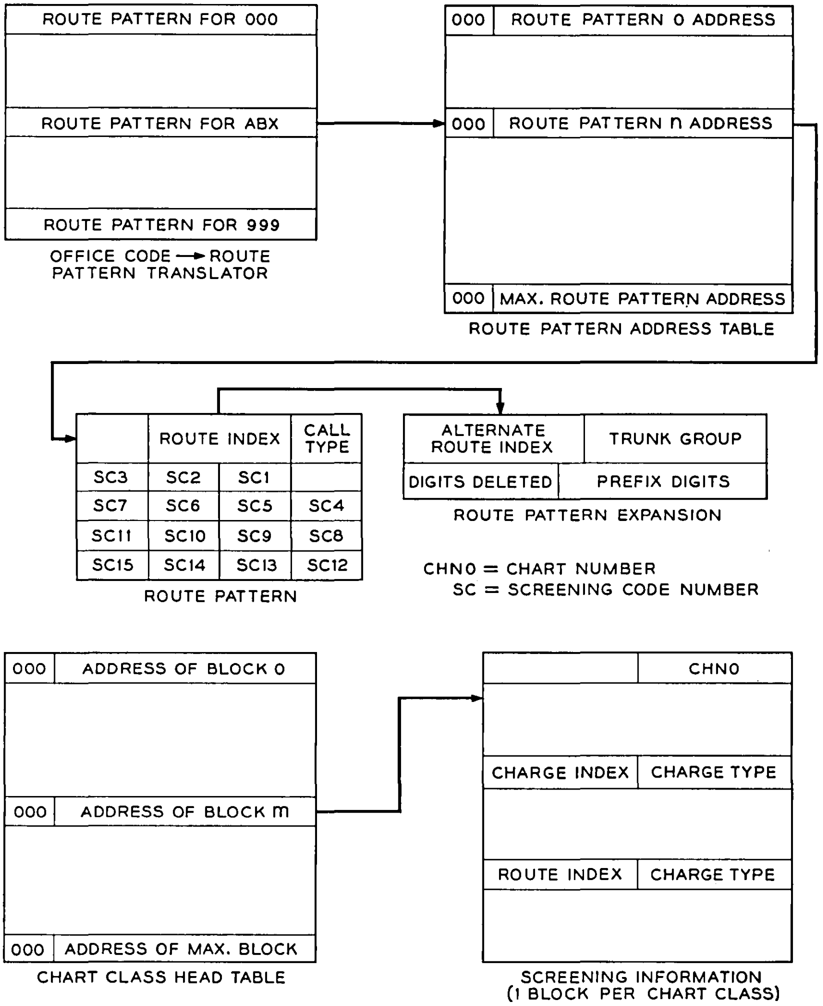

Fig. 6 — Memory layouts for office code translations.

Next, the originating customer's chart class must be used to find screening and charging information. If this chart class is M, the *m*th word of the chart class head table indicates the address of the block of screening information. A preliminary word in this block gives the chart number (1–15) corresponding to the block. If the chart number is, for example, 11, then SC11 in the route pattern would indicate the word in the screening information block which is applicable to this call.

If SC11 = 23, word number 23 of the screening information block is the desired screening word. The contents of this screening word are the charge type and either the billing index (if no screening is invoked) or a special route index (if screening is invoked).

The route index is separately expanded into 2 words of data giving the first-choice trunk group, an alternate route index in case this trunk group is busy, and an indication of how many digits are to be deleted and/or which digits are to be prefixed for outpulsing over the trunk group indicated by this route index.

Other cases, such as vacant codes, intraoffice codes, and codes requiring six-digit translations, are handled by variations of this basic technique. For example, if six-digit translation is required, the expansion on the route pattern indicates that an auxiliary three-digit translation is required and that this translation is stored at a table starting with a given address.

Translation data which have recently been changed are stored in the call store until they have been transcribed into the program store. While in the call store, such entries are referred to as recent changes (RC's).

RC's are stored in the same form as the data will later have in the program store, i.e., as primary and auxiliary TW's. However, since they do not appear in the context of a subtranslator, their association with a particular input parameter must be established. This is done by storing with them their primary translation address or TAG, i.e., the address of the subtranslator location associated with the primary TW.

An RC entry therefore consists of a primary part and possibly an auxiliary block. The primary part occupies two call store words, an RC register. The first word contains the TAG and the status bits, and the second word contains the primary TW.

The four states of the status bits correspond to the four possible states of an RC:

11 — temporary, i.e., do not incorporate RC into PS;
10 — permanent, i.e., incorporate RC into PS;
01 — delayed, i.e., RC is not yet active; and
00 — deleted, i.e., inactive or no RC.

A temporary recent change is used in connection with certain services which require a change of translation information that is not meant to be permanent. For example, the record that a subscriber wants calls to his telephone number to be transferred temporarily to another telephone number is not meant to be entered in the permanent translation record of the system. The record should be used in making the terminating translation whenever the subscriber is called; it must temporarily override the permanent translation information. However, the permanent translation information must not be lost, because it contains all aspects of his normal service which are reinstated when the temporary change of translation is deleted. Temporary translation changes are used in connection with temporary transfers, or with an indication that a line is temporarily out of service because of trouble.

The primary RC's are stored in the primary RC area in ascending order of their TAG's. RC's with the same TAG but with different status (and data) may exist simultaneously. If they do, they are arranged in the order: temporary, permanent, delayed, and deleted.

If an RC requires auxiliary data, it is stored temporarily in the auxiliary RC area and the primary TW is referenced to this temporary auxiliary block.

RC's must be available for translation. Therefore, before translation data are read from the program store, a search is made through the RC area for possible superseding information. For some translations, such as trunk and 3-digit code translations, the search may be bypassed if an RC indicator, a call store bit dedicated to this function, indicates that no RC exists at this time for the translator.

The search through the primary RC area is performed as a so-called "binary hunt."

Let us assume that the RC area contains exactly $2^n - 1$ entries, as shown in Fig. 7. Therefore, there is a central register which divides the area into a lower and an upper half. Since the RC's in the area are ordered according to their TAG's, comparing the primary translation address of the item for which the translation is about to be made with the TAG in the central register renders a three-way decision: an RC for the item is found in the central register, an RC may exist in the lower half, or an RC may exist in the upper half. If no RC is found in the central register, the search is continued in either the lower or the upper half, which is again an interval of the size $2^m - 1$. The process is continued either until an RC is found in a central register or until the interval is reduced to size $2^1 - 1 = 1$. If no RC is found within n steps, then it has been proven that no RC for the item to be translated exists.

The restriction that the size of the RC area be exactly $2^n - 1$ registers is unnecessary. If the size is m, the area is considered to consist of two overlapping sections of size $2^n - 1$. After an initial decision as to which section applies, the hunt can proceed exactly as described above. Again, after $n + 1$ steps, it is proven that no RC for the item to be translated exists.

Considering the fact that in most cases no RC will be found, a modifi-

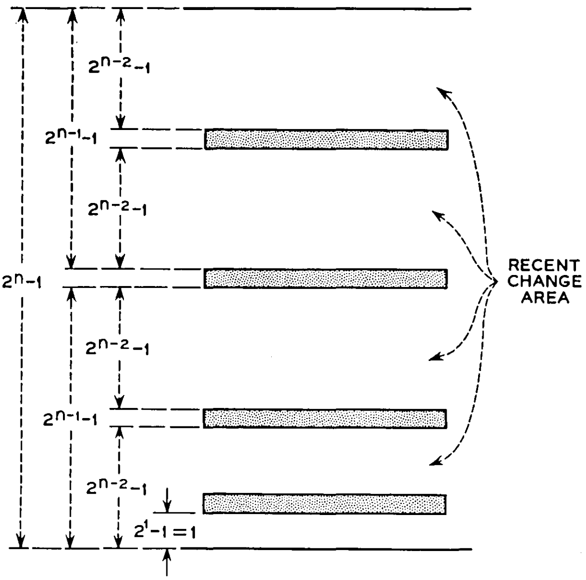

Fig. 7 — Recent change hunt.

cation to accelerate the hunt was designed by substituting a time saving two-way decision for the three-way decision: if an RC exists at all, it may be in the central register or the lower half of the interval, or it may be in the upper half. If an RC exists in some central register, it is considered to be in the lower half; the hunt is then continued, and from then on the result of the decision will always be the upper division, with the final result that the hunt ends in the register just below the one with the found RC. By examining as a final step the register just above the "end" register, either the RC is found or its nonexistence determined.

Auxiliary data are always obtained at the address stored in the primary TW. The translation program does not care whether it is a temporary or a permanent auxiliary address.

V. INITIAL PREPARATION OF TRANSLATION DATA

Fig. 8 shows how translation data enter the system. Originally, the telephone company fills out forms from which punched cards are derived. These punched cards are processed by a general-purpose computer program and are then placed on twistor cards which are inserted into the ESS program store. Subsequent information is inserted by means of

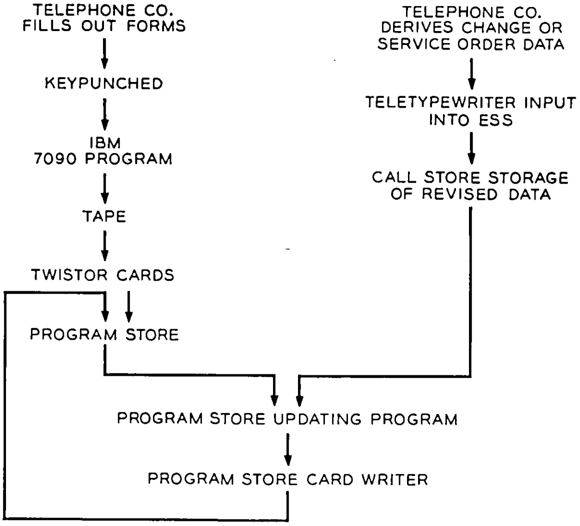

Fig. 8 — Method of placing translation data in program store.

a teletypewriter message typed into the system; the system then stores the translation information corresponding to this information in the RC area of the call store. During the actual running of the system, the call store is always checked for any updating information of the program store translation information, so that the translation program delivers the most current translation information. Periodically, the old records from the program store and the recent changes from the call store are processed, and a new set of program store cards are created using the program store card writer. The change messages are then deleted from the call store, and the associated memory is again made available for new change messages.

A set of forms for deriving the original translation data was created for use by operating telephone companies. In creating these forms, an attempt was made to simplify the task of filling in the high-runner information and to make the complicated data conversions a part of the general-purpose computer program for taking the contents of these forms and creating the information to go on the program store.

Fig. 9 shows the major form used for line information. The form is organized by directory numbers and is headed by an office code and hundreds indication. These forms were designed to simplify keypunching. The small numbers shown on these forms indicate the column of an IBM card into which the appropriate information is to be entered. The

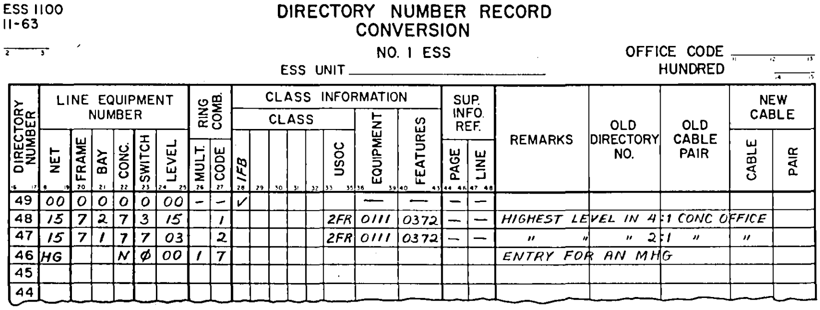

ESS 1100
11-63

DIRECTORY NUMBER RECORD
CONVERSION
NO. 1 ESS
ESS UNIT ____________

OFFICE CODE ____
HUNDRED ____

DIRECTORY NUMBER 16 17	LINE EQUIPMENT NUMBER: NET 18 19	FRAME 20	BAY 21	CONC. 22	SWITCH 23	LEVEL 24 25	RING COMB.: MULT. 26	CODE 27	CLASS INFORMATION: CLASS: 1FB 28	29	30	31	32	USOC 33 35	EQUIPMENT 36 39	FEATURES 40 43	SUP. INFO. REF.: PAGE 44 46	LINE 47 48	REMARKS	OLD DIRECTORY NO.	OLD CABLE PAIR	NEW CABLE: CABLE	PAIR
49	00	0	0	0	0	00	–	–	✓						—	—	—	—					
48	15	7	2	7	3	15		1						2FR	0111	0372	—	—	HIGHEST LEVEL IN 4:1 CONC OFFICE				
47	15	7	1	7	7	03		2						2FR	0111	0372	—	—	" "	" 2	:1 "	"	
46	HG			N	0	00	1	7											ENTRY FOR AN MHG				
45																							
44																							

Fig. 9 — Form used for line information.

office code and hundreds information, being common to an entire page of a form, is placed in the left columns of the card so that it can be simply duplicated in going from card to card. It is followed in the sequence of columns by the last two digits of the directory number and the line equipment number. This line equipment number is written in the standard format of line equipment numbers in the ESS, i.e., a 2-digit network number, a 1-digit frame number, a 1-digit bay number within the frame, a 1-digit concentrator number, a 1-digit switch number and a 2-digit level number. All the digits of the line equipment number must be filled in unless the directory number is associated with more than one line equipment number. This is the case for a multiline hunting group. If a particular directory number is associated with such a group, the person filling in the directory number record fills in the letters MHG in the network and frame columns, and the number of the hunting group in subsequent columns.

Next comes a pair of columns for ringing combinations. For all individual lines nothing is filled in. For two-party lines, the number 1 or 2 is filled in, and for multiparty lines an M is written in the first column and the code is written in the second column.

Next comes a group of columns for the class information of the customer. This class is summarized in a uniform service order code (USOC) and two 4-digit numbers summarizing the special equipment and features associated with this subscriber. The five most common USOC codes in a particular office will be written in as headings for the first five columns, and a check mark will then indicate if a subscriber's class of service is one of these. If not, the 3-digit USOC designation is written in the last column of the class heading. The equipment and features columns consist of two 4-digit octal numbers which specify special equipment and special features associated with this line. Each of the octal numbers summarizes a maximum of three binary conditions. It should therefore be quite easy to remember the significance of each of these octal characters, especially those pertaining to features that are very common. For a subscriber who has no special equipment or features, it is sufficient to have the equipment and features columns blank.

If additional digital information is required, this information is found in a supplementary reference form, and the basic directory number record merely points to the page and line on this form at which this supplementary information is to be found. Supplementary information includes such items as sleeve lead circuit scanner and signal distributor addresses, abbreviated dialing lists, fixed transfer lists and series completion lists.

This directory number record is straightforward, especially for lines with simple features and equipment information. For the lines which have more complicated information, a somewhat higher degree of knowledge of the system is required. For example, it is necessary to know that when a line has a sleeve lead as part of its auxiliary line equipment, it is necessary to fill in supplementary information; this supplementary information should be the master scanner and signal distributor number of the sleeve lead circuit.

For multiline hunting groups, the form shown in Fig. 10 is used. Each terminal in a multiline hunting group is identified by the group number and the group terminal number. It is, of course, necessary to specify the line equipment of each terminal. The main directory number of the MHG must be shown, and if a particular terminal is to be reached on a nonhunting basis using another directory number, this must also be specified. The make-busy arrangements must be specified, and the

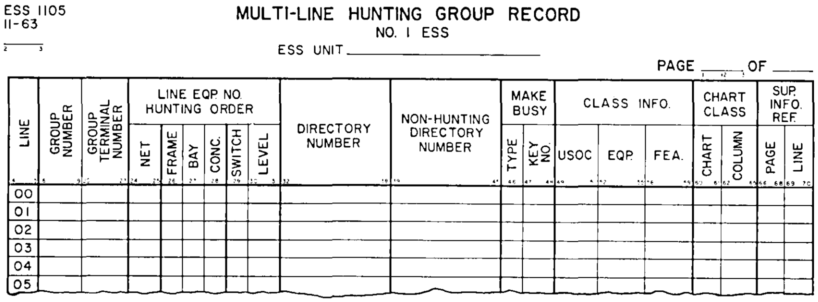

ESS 1105
11-63

MULTI-LINE HUNTING GROUP RECORD
NO. 1 ESS
ESS UNIT ____________

PAGE ____ OF ____

LINE	GROUP NUMBER	GROUP TERMINAL NUMBER	LINE EQP. NO. HUNTING ORDER						DIRECTORY NUMBER	NON-HUNTING DIRECTORY NUMBER	MAKE BUSY		CLASS INFO.			CHART CLASS		SUP. INFO. REF.	
			NET	FRAME	BAY	CONC.	SWITCH	LEVEL			TYPE	KEY NO.	USOC	EQP.	FEA.	CHART	COLUMN	PAGE	LINE
00																			
01																			
02																			
03																			
04																			
05																			

Fig. 10 — Form used for entering multiline hunting group information.

USOC code, equipment, and features may have to be specified separately for different terminals if not every line in the hunting group has identical treatment. In the case of MHG's, a single USOC code may specify a number of different toll diversion treatments, so that it is necessary to indicate the specific chart class. (Normally, a chart class is implied by the USOC code.) Supplementary information may be required for at least some of the terminals in the hunting group if, for example, they have sleeve leads.

The trunk forms are relatively straightforward and will not be described in detail here. They present the information that is necessary for making the translations indicated in Section III.

The specification of the 3-digit translations is considerably more complicated. Five different forms must be filled out. Furthermore, there is considerable interrelationship among these five forms.

The first and simplest of these forms is the basic 3-digit translation form in which, for every 3-digit code, a rate and route pattern, simply a 4-digit number, is specified (see Fig. 11). All office codes having the same rate and route pattern must have the property that all classes of service in the particular office are routed and charged in an identical manner. A similar form is filled out for each 6-digit translator.

Next, a rate and route pattern record must be filled out (see Fig. 12). This pattern gives a regular route index, a call type, an indication of whether overlap outpulsing can be used with the regular route index, and a series of 15 screening codes. If this is an intraoffice call route pattern, the normalized office code is substituted for the regular route index. Each intraoffice office code must have a separate route pattern.

The screening codes that are written in the 15 double columns must have corresponding entries on the form shown in Fig. 13. This form has

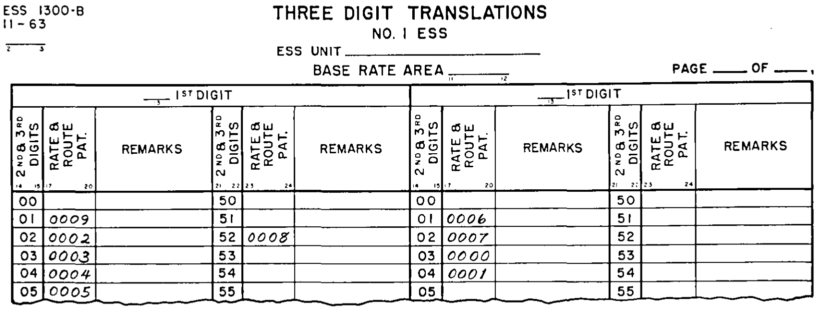

ESS 1300-B
11 - 63
2 3

THREE DIGIT TRANSLATIONS
NO. 1 ESS
ESS UNIT ______
BASE RATE AREA ______ 11 12
PAGE ____ OF ____

____ 1ST DIGIT 3						____ 1ST DIGIT 13					
2ND & 3RD DIGITS 14 15	RATE & ROUTE PAT. 17 20	REMARKS	2ND & 3RD DIGITS 21 22	RATE & ROUTE PAT. 23 24	REMARKS	2ND & 3RD DIGITS 14 15	RATE & ROUTE PAT. 17 20	REMARKS	2ND & 3RD DIGITS 21 22	RATE & ROUTE PAT. 23 24	REMARKS
00			50			00			50		
01	0009		51			01	0006		51		
02	0002		52	0008		02	0007		52		
03	0003		53			03	0000		53		
04	0004		54			04	0001		54		
05	0005		55			05			55		

Fig. 11 — Three-digit translation form.

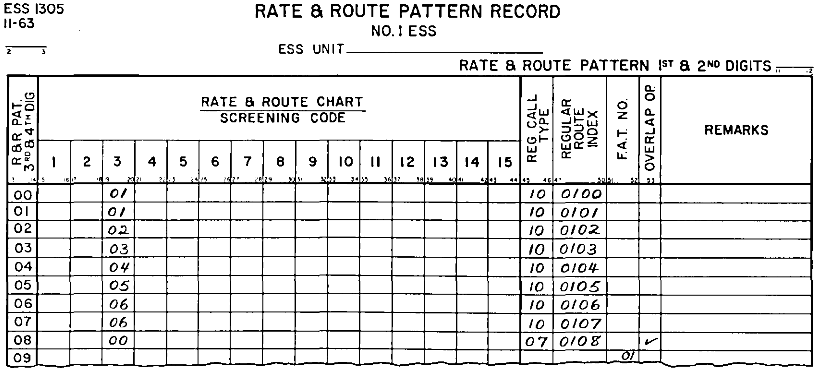

ESS 1305
11-63

RATE & ROUTE PATTERN RECORD
NO. 1 ESS
ESS UNIT ____
RATE & ROUTE PATTERN 1ST & 2ND DIGITS ____

R&R PAT. 3RD & 4TH DIG.	RATE & ROUTE CHART SCREENING CODE															REG. CALL TYPE	REGULAR ROUTE INDEX	F.A.T. NO.	OVERLAP OP.	REMARKS
	1	2	3	4	5	6	7	8	9	10	11	12	13	14	15					
00			01													10	0100			
01			01													10	0101			
02			02													10	0102			
03			03													10	0103			
04			04													10	0104			
05			05													10	0105			
06			06													10	0106			
07			06													10	0107			
08			00													07	0108		✓	
09																		01		

Fig. 12 — Rate and route pattern record.

two columns devoted to each chart class. Associated with each screening code is a charge index and sometimes a special route index.

To illustrate the problem of filling out these forms, let us consider only that aspect of the forms dealing with the translation necessary for wide area telephone service (WATS). We will consider here only interstate WATS. This service permits all subscribers to dial calls outside their state within certain zones on bands. Six different bands are provided, and a customer is able to reach all bands up to the farthest band that he is allowed to reach. For example, a customer in New York subscribing to band 6 will be able to call anyone in the continental U. S. outside New York State, whereas a customer having only band 1 service can call only a few of the surrounding states. The office code form has been filled out for a few typical office codes. These office codes include 9 numbering plan area (NPA) codes (codes indicating a 10-digit call to an area outside the subscriber's 7-digit area) and one conventional 7-digit code. Different route patterns have been assigned to each of these codes, and the route patterns are expanded on the rate and route pattern record. Route patterns 0 through 7 are associated with call type 10 (a 10-digit call). Whereas route pattern 8 is associated with a 7-digit code, route pattern 9 is associated with a 6-digit foreign area translator. Since routing will be done on the basis of the 6 digits dialed, no route index is specified. Nine different regular route indexes are shown for the nine route patterns. In addition, a series of screening codes for chart 3 has been assigned. Chart 3 is the chart assumed to be used in the local office for the WATS classes of service.

In Fig. 13, columns are labeled by the appropriate class of service.

ESS 1304-A
11-63

RATE AND ROUTE CHART 03
TITLE
NO. 1 ESS
ESS UNIT

PAGE 1 OF —,

SCREENING CODE	SUBSCRIBERS CLASS OF SERVICE																							
	COLUMN 0001						COLUMN 0002						COLUMN 0003						COLUMN 0004					
	WATS 1M						WATS 2M						WATS 3M						WATS 4M					
	SPEC ROUTE INDEX	CHG.	ACC		SP. CALL TYPE	REM.	SPEC ROUTE INDEX	CHG	ACC		SP. CALL TYPE	REM.	SPEC ROUTE INDEX	CHG.	ACC		SP. CALL TYPE	REM.	SPEC ROUTE INDEX	CHG.	ACC		SP. CALL TYPE	REM.
			I	O					I	O					I	O					I	O		
00	0081	000					0081	000					0081	000					0081	000				
01		015						015						015						015				
02	0081	000						015						015						015				
03	0081	000					0081	000						015						015				
04	0081	000					0081	000					0081	000						015				
05	0081	000					0081	000					0081	000					0081	000				
06	0081	000					0081	000					0081	000					0081	000				
07																								

(a)

ESS 1304-A
11-63

RATE AND ROUTE CHART 03
TITLE
NO. 1 ESS
ESS UNIT

PAGE 2 OF —,

SCREENING CODE	SUBSCRIBERS CLASS OF SERVICE																							
	COLUMN 0005						COLUMN 0006						COLUMN 0007						COLUMN 0008					
	WATS 5M						WATS 6M						WATS 1F											
	SPEC ROUTE INDEX	CHG.	ACC		SP. CALL TYPE	REM.	SPEC ROUTE INDEX	CHG	ACC		SP. CALL TYPE	REM.	SPEC ROUTE INDEX	CHG.	ACC		SP. CALL TYPE	REM.	SPEC ROUTE INDEX	CHG.	ACC		SP. CALL TYPE	REM.
			I	O					I	O					I	O					I	O		
00	0081	000					0081	000					0081	000										
01		015						015						015										
02		015						015					0081	000										
03		015						015					0081	000										
04		015						015					0081	000										
05		015						015					0081	000										
06	0081	000						015					0081	000										
07																								

(b)

Fig. 13 — Rate and route chart.

Two types of WATS classes of service exist, measured-time and full-time. Customers who have WATS measured-time service are charged a base rate for a certain number of hours of calling time, and are charged for overtime on a time basis. Customers who have WATS full-time service are allowed to call for an indefinite amount of time for the basic rate. Six of the seven screening codes refer to the six bands of WATS: the seventh refers to intrastate numbers. All interstate WATS customers are denied intrastate calls and are routed to a special announcement indicated by special route index 0081. Customers who are allowed to complete their calls because the calls are within their allotted bands are routed via the regular route. The charge index for measured-time WATS customers is assumed to be 15 and for full-time WATS customers is assumed to be 16. (The charge index numbers are for this particular office.) If, on the other hand, a customer is denied the right to make this call because the call is outside his band, there is no charge, a condition indicated by charge index 0. In examining the rate and route chart it can be seen that customers with WATS 1 service are allowed to call any codes within screening code 1, customers with WATS band 2 service within screening codes 1 and 2, . . . , and WATS band 6 service customers are allowed to dial any office codes with screening codes 1–6. For example, any office code having a route pattern which has a screening code 4 on chart 3 would be denied to the customer with WATS 1M, 2M and 3M, and would be permitted to customers with class of service WATS 4M, 5M and 6M.

The chief difference between the WATS 1F and WATS 1M customer is a different charge index for those calls that are not denied. This charge index then implies what type of charge record will be made of this call. (Presumably, in this case, the operating company is interested in taking data even though no charge will be made on each individual call.)

The translation forms have a dual use. They are used for creating the initial translation information and they become part of the office records. When subsequent changes are made they are made on these forms. A number of other forms, similar to the forms described, have also been created for maintaining office records. However, the above records contain most of the information necessary for generating the original line, trunk, and office code translation information. These forms are then punched on IBM cards and go through an extensive sorting, checking and data conversion program. This program has been written for an IBM 7090 computer and is approximately 15,000 words long. To compile the data for a 5000-line office should require approximately one hour of running time.

VI. PROCESS OF ACCEPTING RECENT CHANGES

The bulk of all RC's are introduced into the No. 1 ESS through service orders sent over the service order teletypewriter. A service order is the form by which the operating company informs everyone concerned of the pertinent facts of pending changes on customers' lines and telephone numbers. The message is expressed in telephone company language and may contain, from the viewpoint of ESS, both significant and superfluous information. (For example, the fact that a pink phone should be installed is not pertinent translation data in ESS.)

Fig. 14 shows a copy of a service order with its various fields. The first three fields on the first line are intended to hold the service order number, the activation code, and the service order type. The activation code indicates whether an RC should become effective immediately or

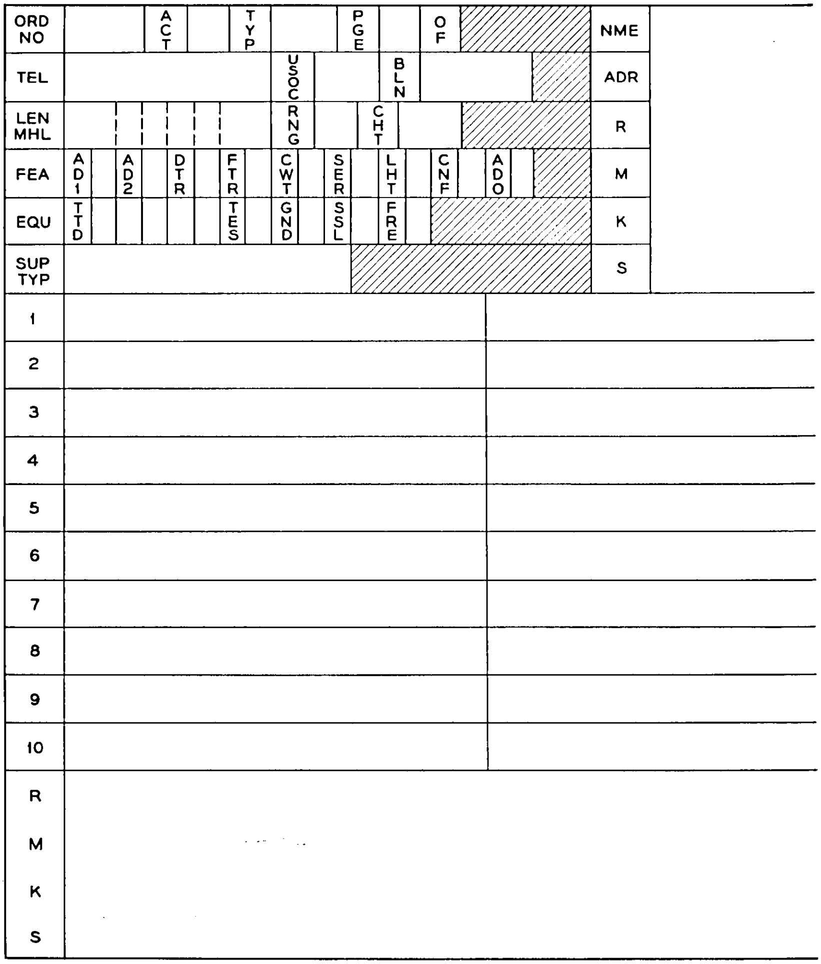

Fig. 14 — Service order format.

be delayed. The service order type (in order, out order, change directory number, change class of service, etc.) indicates how to process the following data.

The fields on the second line are reserved to hold directory number, unified service order code (USOC), and billing number, if it differs from the calling directory number. The third line has the fields for the line equipment number, or the MHG number if the service order refers to a multiline hunting group, the type of ring, and the chart class. The next two lines have the fields for all service and equipment features. A check in one of them indicates the existence of the feature in question. Then follows a field for the type of supplementary data. If this type is not blank, the supplementary data, such as an abbreviated dial or transfer list, or sleeve lead data, or a multiline hunting list, follow on the lines underneath.

When an RC is introduced via the teletypewriter, the data are selected from the appropriate fields as a function of the service order type, and digested. If the format is not correct, the RC is rejected. Otherwise, the code in the field is translated from telephone company language into the cipher used inside ESS. For example, unified service order code (USOC) 1FR (one party flat residential) is translated into the codes for major class = individual line, and chart class = flat rate; line equipment number 02425212 is translated into its binary form 00101001101101100. The translated item is then stored in the proper place of the auxiliary block of memory in the call store which is seized at the start of the assembly of any new RC. The proper position within this block is determined by a pattern decided upon by an examination of early data. If the pattern allows a variable-length block of memory, the largest size is selected initially and revised downward as more information is absorbed.

In this way, the RC is gradually built up in the auxiliary area regardless of whether the block will finally be retained or not. At the end of the assembly, a compressibility check is made. If the class of service allows an abbreviated code, the auxiliary block is abandoned, and only a primary entry with complete data remains. If the data cannot be compressed, the primary entry is made up with the reference to the auxiliary block already prepared. In any case, the primary RC is entered into an RC buffer register.

The RC buffer register is an intermediate storage location in which the primary RC's are stored before being inserted in the ordered RC area. This buffer storage is necessary so that the actual insertion can take place whenever spare time is available in the system.

Supplementary data, such as abbreviated dialing or fixed transfer lists which are not part of an auxiliary block, are also temporarily assembled in the auxiliary area. For each of the items in the lists, a primary RC entry will then be made as room in the RC buffer allows.

Insertion consists of the following steps: first, the point of insertion in the ordered list is determined. Then a search is made for an inactive RC register in the neighborhood of the point of insertion. If such a "hole" is found, all entries between the point of insertion and the hole are moved to create a "hole" at the point of insertion. Finally, the primary RC from the buffer is inserted there.

The RC buffer is administered sequentially, with the top entry following the bottom entry, and emptied on a first-in, first-out basis.

The time spent in the insertion process is unpredictable, because it depends on the number of RC registers between the point of insertion and the first available empty space. Occasionally, this time might exceed the allowable limit permitted by the main program of the system. Therefore, the insertion sequence is temporarily interrupted if the allowable time has expired, and continued later when time is again available.

In order to minimize insertion time, an effort is made to scatter the active RC's over the entire primary area. This effect is achieved by merely changing the status bits of an RC that is to be removed to the "deleted" or inactive code. Eventually, it will be overwritten in the insertion process, since a deleted status is the indication of an available space.

No action is taken to delete auxiliary blocks. As soon as the reference to them becomes inactive in the primary RC, they are "dead," scattered between still-active blocks. A consolidation routine is required which is performed every night. This routine rearranges the scattered active blocks into a contiguous file. It is a very time-consuming routine. It runs through all primary RC's, singling out those which have a reference address to an auxiliary block in the still unarranged area, comparing the reference addresses, and in the end arriving at the RC with an auxiliary block nearest to the end of the consolidated area. This block is then moved to close the gap and its reference address is changed. The process is repeated until all "dead" spaces are squeezed out.

Most service orders request a delayed activation of the change. In this case, the primary RC or RC's for line equipment number and/or directory number are given delayed status until activation is called for by dialing the service order number from a special telephone line termination.

In order to preserve the connection between service order number and resulting RC's, an RC entry with the service order number as TAG is made, whose primary TW contains either a line equipment number, a directory number or an MHG number to identify the primary RC's which have to be activated. If more than one such identifier is needed, a reference address leads to an activation block which contains them. At activation time, the entry which contains the service order number is deleted, while entries identified by the service order number are given "permanent" status.

Changes on trunk circuits or office codes are treated in a way similar to those originated by service orders. They are normally introduced over the maintenance channel of the teletypewriter. They lack a service order number and therefore cannot be accepted on a delayed basis. Although they use telephone company terminology, their format is closer to the needs of ESS.

VII. PROGRAM STORE UPDATING

When recent changes have accumulated in the call store, they are transcribed onto the program store. The future location of primary RC's is predetermined by their TAG. The future location of auxiliary blocks is chosen when the RC is received, and the location stored as the permanent auxiliary address in a control word preceding the auxiliary block. This control word is not part of the auxiliary block and is not carried over to the program store.

It is required that any number of modules be updated at a time and also that the updating of a module may be interrupted at any time without harm.

For each card of a module about to be changed, a card image is prepared in the call store by copying into it the contents of the old PS card. Then a search is made through the RC area to find the RC data modifying the card image. The address of the 64 words in the card corresponds to 64 program store addresses. Whenever a permanent RC with a TAG equaling one of those addresses is found, the corresponding card image location is changed. If the primary TW contains anything but a temporary auxiliary address, it is transcribed as such. If the primary TW contains a temporary auxiliary address, the control word of the auxiliary block containing the future permanent auxiliary address is transcribed instead (see Fig. 15).

If the primary TW contains a temporary auxiliary address, whether

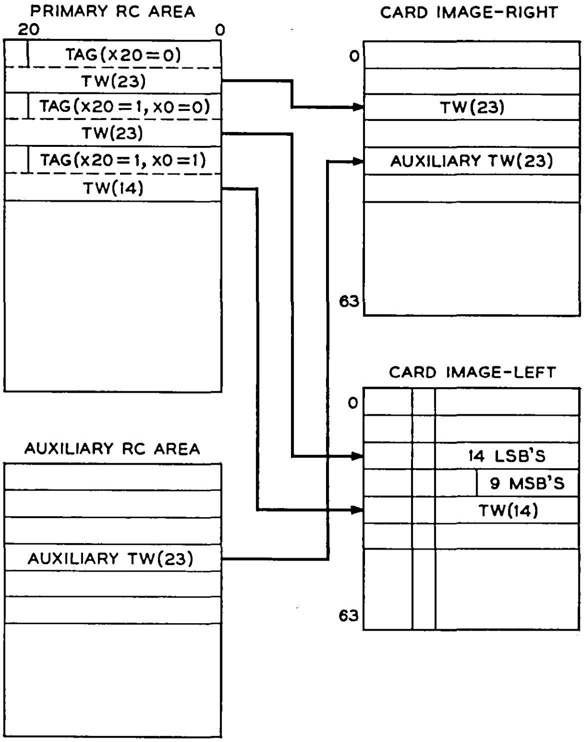

Fig. 15 — Transcription of recent changes from the RC area to the card image.

the TAG belongs to the card or not, the permanent auxiliary address is examined and the following cases are distinguished:

(a) None of the auxiliary TW's belong on the card.

(b) The auxiliary block starts on the card. It may or may not end on it.

(c) The auxiliary block ends, but does not start, on the card.

(d) Sixty-four auxiliary TW's in the middle of the auxiliary block belong on the card.

Whatever portion of the auxiliary block belongs on the card is then transcribed onto the card image.

The card images thus prepared are used to write new memory cards. After a module has been written and inserted into the PS, a limited verification takes place. An error in a changed word does not cause rejection, since the RC is still available.

After an arbitrary number of modules has been written, verified, and duplicated,* the RC area is updated; the RC data which were correctly transcribed to the PS are eliminated as follows:

All primary RC's with permanent status are examined, and the following cases are distinguished:

(a) The primary TW contains anything but a temporary auxiliary address. The primary TW in the RC area is compared with its counterpart in PS. If both are equal the RC is deleted.

(b) The primary TW contains a temporary auxiliary address. Each auxiliary TW in call store is compared with the contents of the program store words at the location of the permanent auxiliary address. If all words match, the block is considered correctly transcribed. If the primary TW in PS already contains the permanent auxiliary address, the primary RC is deleted. If it does not yet have the right reference address, the primary TW in the RC area is changed by replacing the temporary with the permanent auxiliary address. If the block was not correctly transcribed, no action is taken.

This method of updating the RC area explains why the limited verification method is permissible: if a changed word is incorrectly transcribed to the PS, no harm is done, since the RC is not deleted. It will be corrected at a later time.

This method of updating also makes the writing of modules independent of each other. For instance, if an auxiliary block overflows from one module into the next one, and if either module is revised, the RC will stay intact until the other part is done. Or, if the primary RC is in one module, the auxiliary block in another, either module may be written without consideration of the other one. Also, the writing of a module can be interrupted without any damaging effect, since no changes in the RC area are made before the three steps of writing, verifying and duplicating are completed.

Available space in the PS translation area is administered via linked lists of available space. The lists are first created in PS when the original translation data are installed. Lists are maintained for spaces of 2, 3, · · · , 31 words, and one list is maintained for larger spaces, both in the right and the left halves of the PS. Each of the larger spaces contains the address of the next large space and contains its own length. As new space is needed, or as active space is relinquished, the linked lists and their headcells are updated via the recent change mechanism. If space

---

* The first of the two duplicate modules is written as described above. The second is merely copied from the first one.

is seized from a larger area, the length information for this area is updated.

VIII. CONCLUSION

The translation plan for No. 1 ESS has accomplished a number of goals. It has provided:

(1) compact storage of subscriber, trunk and office code data — data that are currently stored in cross connections in electromechanical systems,

(2) convenient means for handling changes in such information,

(3) facilities for providing much of the information that permits a generic program to handle a specific No. 1 ESS installation,

(4) convenient forms of input and output data for use by a generic office program, and

(5) convenient means for introducing translation information changes in a working office.

Translations have been a major tool in making a generic No. 1 ESS possible and efficient.

IX. ACKNOWLEDGMENTS

Many of our colleagues have made substantial contributions to the No. 1 ESS translation scheme. In particular, we would like to acknowledge the contributions of J. H. Carran, D. F. Peckens, D. P. Bannon and H. R. Appenzeller, who worked out the plan of associating the various equipment numbers in the ESS and who worked out the cutover forms; Mrs. E. Fong and Miss S. H. Wiley, who programmed and debugged much of the basic translation program; Miss B. Reaugh, who programmed the translation information change program; Mrs. A. C. Some, who did much of the early work of deducing the translation requirements; W. G. Feger, W. H. List, and R. R. Scotson, who are writing the program to convert the data on the cutover forms into data to be stored in translation tables; and L. S. Tuomenoksa, who did much of the work on an earlier system that was a sound starting point for the present scheme. In addition, we would like to thank our colleagues at Bell Laboratories who, in deriving system programs, discovered many of the requirements for the translation and made many valuable suggestions, and our colleagues at New Jersey Bell Telephone Co. American Telephone and Telegraph Co., and Western Electric Co. who supplied so much sound constructive criticism in the derivation of useful translation forms.

REFERENCES

1. Carbaugh, D. H., Drew, G. G., Ghiron, H., and Hoover, Mrs. E. S., No. 1 ESS Call Processing, B.S.T.J., this issue, p. 2483.
2. Ault, C. F., Gallaher, L. E., Greenwood, T. S., and Koehler, D. C., No. 1 ESS Program Store, B.S.T.J., this issue, p. 2097.
3. Harr, J. A., Taylor, F. F., and Ulrich, W., Organization of No. 1 ESS Central Processor, B.S.T.J., this issue, p. 1845.

System Testing of the No. 1 Electronic Switching System

By G. HAUGK, S. H. TSIANG and L. ZIMMERMAN

(Manuscript received January 27, 1964)

Plans for testing the hardware and software and for evaluating overall system operation of the No. 1 electronic switching system are described. Program and hardware test facilities and the early results achieved using these facilities on the first two No. 1 ESS installations are presented.

I. INTRODUCTION

Planning for system testing started at the beginning of the No. 1 electronic switching system (ESS) development.[1] Test facilities were designed concurrently with the design of the system. This paper describes the test plan being followed, the test facilities that are being used and the results that were obtained on the first two No. 1 ESS installations.

The first No. 1 ESS, located at the Holmdel Laboratories, is being used for checking system design. The second No. 1 ESS at Succasunna, N. J., is the first of a large number of systems scheduled for commercial service.

Fig. 1 broadly illustrates three sequential periods of testing. Factory tests are followed by system tests and, after cutover of an office to service, by maintenance tests.[2] Fig. 1 also depicts system evaluation, an activity which has its beginnings in the planning and design stages and carries through many issues of a new system.

Factory testing is a subject on which there are many views. Most views include some degree of device and package testing, and inspection for workmanship — such as the quality of the wired connections. Beyond that they range from continuity checks of mounting plate assemblies and major units to functional tests of groups of major units or subsystems, and on out to rather complete system testing. The major units of the Holmdel system, after very little factory testing, were shipped directly to Bell Laboratories for extensive design testing prior to use in the

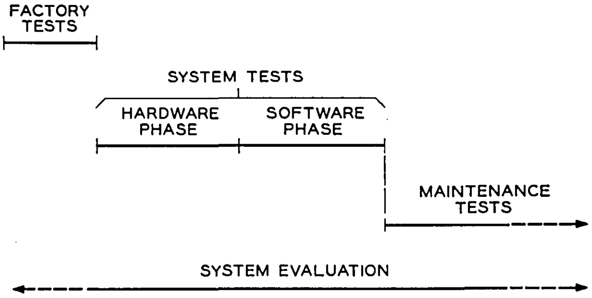

Fig. 1 — Test diagram.

system. With the availability of test specifications, the major units for the Succasunna system underwent considerable factory testing prior to shipment.

The system test interval (see Fig. 1) consists of two sequential phases, hardware and software (program). At installations beyond the early No. 1 installations the software phase will largely disappear. The debugging of programs which provide new features will be accomplished on the Holmdel system. When this point is reached, testing at the field site becomes what is known as "installation testing." This paper deals with system testing. However, much of the test planning and many of the facilities and techniques for system testing can be and are being applied to installation testing by the Western Electric Company.

II. HARDWARE TESTING

System hardware testing checks the proper functioning of all units as a system. The major units of the No. 1 ESS are the central control, program store, call store, central pulse distributor, and peripheral units. The peripheral units include the signal distributor, scanner, network, and master control center. The teletypewriter, automatic message accounting unit, memory card (program store memory) writer, and control display and test panel are all parts of the master control center.

For the first No. 1 ESS system at Holmdel, the hardware testing was intended to prove the system design both from the hardware and logic standpoints. Although most units had been individually tested, they had never worked together as a system. Many maintenance features,[2] such as those in the central control, could be tested only during system testing.

The hardware testing is done in two stages, manual and program. Manual testing comprises only a very small part of the total effort. The hardware testing is essentially accomplished by program means. Special programs, called "X-ray programs," were designed for this purpose. The term "X-ray" is used to convey the idea of examining the internal and basic functions of the system. Two aspects of hardware testing are the detection and location of troubles. The latter is by far the more difficult. One objective in the design of the X-ray programs was to simplify the method used in hardware testing. The programs developed not only detect troubles at system speed but also help in locating them easily and quickly.

2.1 *Manual Hardware Testing*

Manual hardware testing includes all tests not performed by use of X-ray programs. Many of these tests, such as power testing and continuity checking of interunit wiring, are rudimentary in nature and perhaps not properly classified under system testing. On the other hand, some manual testing, particularly that carried out on the Holmdel system, can be considered system testing — for example, the pulsing and monitoring of the systems communication buses[3] using pulse generators and oscilloscopes to ferret out system noise problems.

In the No. 1 ESS the central control is the basic control unit and the most complex unit in the system. It governs the flow of information and coordinates the action of all other units. The program store is used to store the program of the system and data such as the translation information associated with each customer.[4]

In the plan that is being followed for No. 1 ESS testing, the goal is to bring the central control and the program store to a state where they can be operated together on X-ray programs as soon as possible in order to fully test themselves and other units of the system. With a proper installation sequence, manual testing and in fact X-ray testing, can progress while many major system units are being installed. The total hardware test period, therefore, can be shortened.

Manual testing of the central control and program store primarily consists of testing the central control's ability to send addresses to and receive instructions from the program store. In addition, central control's ability to execute a few simple instructions is checked before X-ray programs are used. At the conclusion of these manual tests only a very small fraction of the vast amount of circuitry in the central control[5] has been tested. The manual testing of the central control and program store is carried out with the aid of a central control manual tester (see Fig. 2). This test set is mobile and plugs into a central control. Using

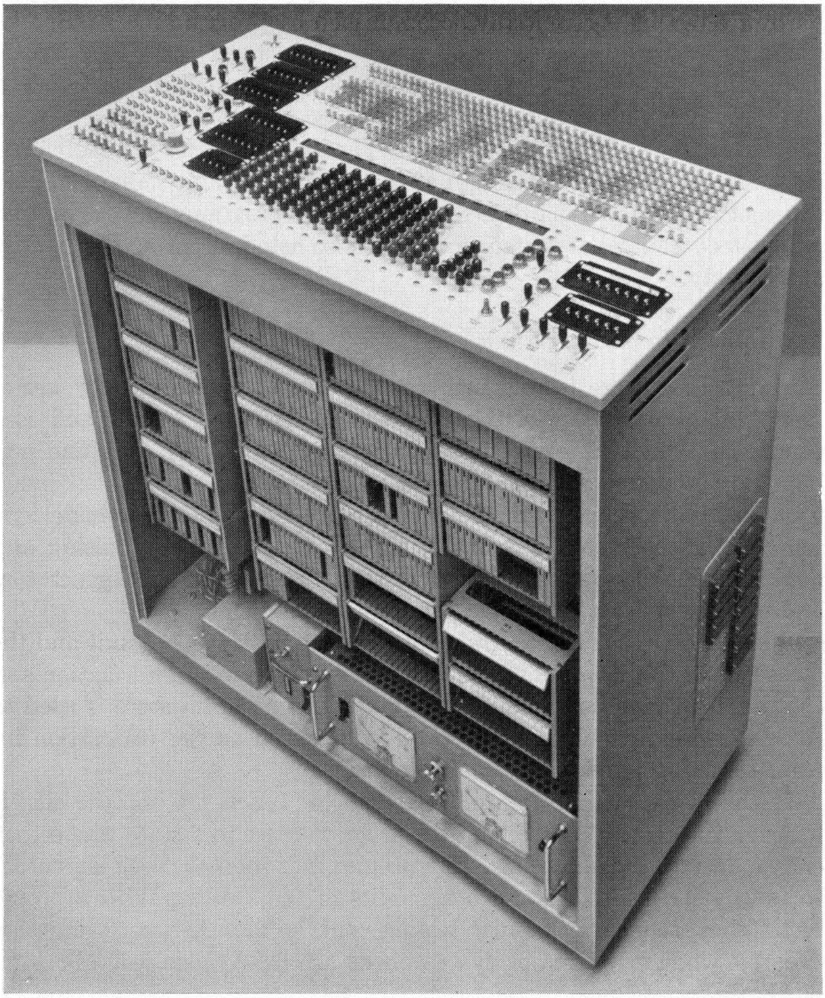

Fig. 2 — Central control manual tester.

this set one is able to

(1) insert instructions and control the execution of instructions by central control,

(2) simulate the response of any unit to central control,

(3) monitor key points in the central control,

(4) monitor outputs of the program store, call store and scanners, and

(5) generate signals to stop or interrupt[4] the system or automatically

insert program instructions when a selected program store or call store address is reached.

The last feature is used when a central control is under program control. In fact, the central control manual tester is the primary tool used with the X-ray programs.

2.2 *Programmed Hardware Testing*

The No. 1 ESS is a program-controlled machine having a high degree of control centralization. This made possible the use of programs, very powerful tools, for system testing. Also, because of the high degree of control centralization, common testing is emphasized. That is, once the central control operates with the program store, it is used to test itself and the rest of the system in a "bootstrap" manner.

The basic central control circuits are tested first. Using the basic central control functions, the central pulse distributor is tested next, and in the process additional central control functions are tested. In a similar manner, the call store and the peripheral units are added in turn. The unit to be tested is selected by switches on the central control manual tester.

The X-ray programs are designed to test at operating speed bit-by-bit and function-by-function a system which has not been previously operated. The underlying principle employed in the design of the X-ray programs is to start with simple tests to check out basic circuits, then gradually extend into other circuits using, insofar as possible, only previously tested circuits. Each test in the X-ray program checks for a known test result and is designed to check a particular circuit or function.

A generalized sequence chart for the X-ray programs is shown in Fig. 3. The programs go from test to succeeding test until a failure occurs. When this happens, a transfer is made to a failure leg. What happens in this leg is dependent upon the circuit-controlled option which has been selected by the user. These options are provided in the central control manual tester which is plugged into the system during the X-ray tests. The options are stop, record and advance, and recycle.

Stopping freezes the machine in a state as close as possible to the trouble condition. Pertinent information about the state of the system at the time the error occurred is preserved and displayed on the central control manual tester.

Record and advance is an attempt to save the data in the central control registers and continue. The data are typed out via a teletypewriter at the end of every test that fails.

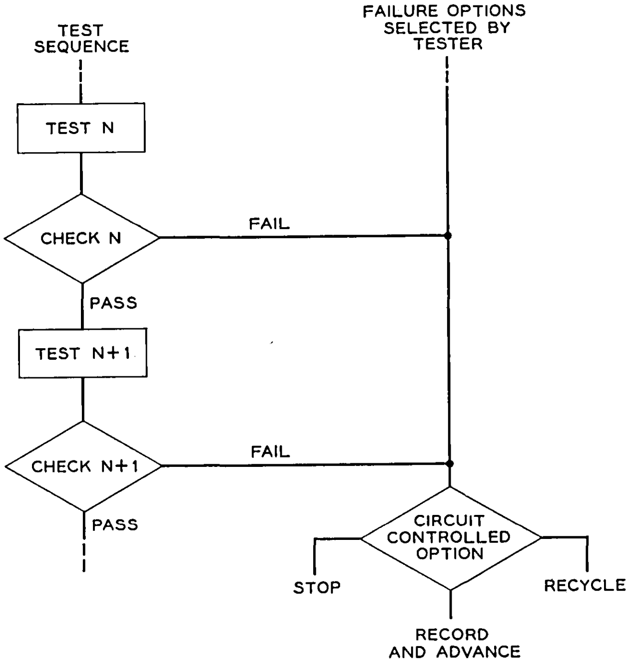

Fig. 3 — Generalized X-ray sequence.

Recycle provides a means to continually repeat the test at system speed. Therefore, any part of a circuit can be examined with an oscilloscope under dynamic conditions.

The normal mode of operation is to use the stop option to detect a trouble. With the machine stopped, lamps on the central control manual tester (J-register display)[4] are used to determine the program store address of the test which failed. For each test a comment indicating the possible source of trouble, should the test fail, is given in the program listing. Other lamp displays on the central control manual tester yield further information regarding the trouble. At this point the trouble is localized. Additional information about the trouble can be obtained by recycling the test. Using this procedure, which requires the use of the X-ray program listing, circuit schematics and the oscilloscope, a trouble is usually tracked down quickly.

The X-ray programs for most of the system units are divided into two parts, single system and duplicate system. A single-system X-ray is used to test a single unit. A duplicated system X-ray tests multiple-unit arrangements and maintenance features. All X-ray tests are made with a central control-program store combination.

For reliability and maintenance purposes[2] all units, with the exception of those which affect only single customers, are duplicated. The duplicated units normally run in parallel. Each is checked against its mate by match circuits while performing identical functions. It is possible, however, with minor hardware modifications, to split the system into two independent systems. Such an arrangement, using a central control manual tester on each system, has been used during single-system X-ray testing. This method of operation accelerates single-system X-ray testing, thereby reducing the hardware testing period. For duplicated system X-ray tests, the split system arrangement is not applicable.

The X-ray programs used prior to cutover and the maintenance programs used after cutover of an office to service are similar, since they both test the same hardware. In what follows, some of the factors which caused differences are discussed.

Maintenance programs have stringent real-time and complicated interface requirements because they must share real time with call programs. The X-ray programs, used before a system is providing telephone service, are not time-shared with call programs. In addition, the X-ray programs need not share the system memories with call programs.

The primary maintenance tool used when a No. 1 ESS is giving telephone service is the dictionary.[8] A maintenance dictionary is a table relating the printouts of diagnostic test results with corresponding faulty plug-in packages. The dictionary technique is built upon the assumption that a trouble has just occurred in a working system. However, at the outset of the hardware phase of system testing, multiple faults must be assumed in the system and the dictionary technique is not applicable.

The maintenance programs have available to them all of the hardware maintenance facilities — for example, working teletypewriters and match circuits. On the other hand, during much of the hardware phase of system testing the hardware maintenance facilities are not usable as tools.

The dictionary technique makes use of the pattern of test failures which results from a series of tests applied over large amounts of circuitry. The X-ray technique makes use of the information at the first test that fails in a series of tests, each of which is applied over small amounts of circuitry.

In Table I these factors are summarized. In the last column of the table an S or C indicates whether a factor results in simplification or complication in the design of the X-ray programs.

TABLE I — TEST PROGRAM COMPARISONS

Factor	X-Ray	Maintenance	Result
Time shared with call programs	no	yes	S
Memory shared with call programs	no	yes	S
Use of auxiliary test sets and instruments	yes	no	S
Multiple faults in every unit	yes	no	C
System maintenance facilities available	no	yes	C

The assignment of central pulse distributor, scanner, and signal distributor points varies from office to office. The X-ray program obtains the addresses of these points and other items which vary from office to office by reference to a translation area,[6] provided for system programs, in the program store. Thus the X-ray program is usable in any No. 1 ESS installation.

III. SOFTWARE TESTING

The large system program for No. 1 ESS is at least as complex as the hardware used to carry out the program. The early systems are being used for design debugging of the software as well as the hardware.

3.1 *Hardware Facilities*

During system testing of No. 1 ESS, input-output, control, and monitoring facilities, which can be used for program debugging, are provided by the central control manual tester and the system's maintenance teletypewriter, automatic message accounting magnetic tape unit, and control display and test unit. However, because of the large amount of program debugging being done at the Holmdel Laboratories, additional facilities were added to the Holmdel system to provide greater speed and flexibility.

The additional input-output facilities provided at Holmdel consist of a card reader, a high-speed printer and a magnetic tape unit.

A card reader, which reads 100 cards per minute, is used as an alternative to the teletypewriter to load information into the ESS. This means of loading information is a more reliable means of repeatedly introducing information than the teletypewriter, is more flexible and is about 10 times faster than teletypewriter tape. The information is read into the system via No. 1 ESS scanners. This reader has also been provided at Succasunna for use in program debugging.

A high-speed printer, which prints 80 characters per line at 1000 lines per minute, is used as an alternative to the teletypewriter to dump information from the ESS. It is more than 100 times faster than the teletypewriter. The printer provides a practical means of obtaining large amounts of data from the system without excessive use of machine time and eliminates the delay that is encountered in obtaining printed copy if magnetic tape is used. The system communicates with the printer via the peripheral bus.[3]

The tape reader assembler and processor (TRAP) is a facility used to control the transfer of data from magnetic tape to program store twistor cards via the memory card writer. TRAP has been provided at both the Holmdel and Succasunna installations because of the frequent changes required on twistor cards during the program debugging period. In addition, the TRAP unit at Holmdel has been modified and connected to the system's peripheral bus so that its magnetic tape unit can be used in loading and unloading system information. The magnetic tape unit is about 12 times faster than the high-speed printer.

At Holmdel a program test console (console) is used in place of a central control manual tester; it provides greatly expanded monitor and control facilities. In appearance, the most striking difference between these units (see Figs. 2 and 4) results from the 2544 monitor lamps on the console as opposed to a 442-lamp display on the central control manual tester. The console simultaneously monitors 864 points in each central control. These points include almost all of the central control flip-flops. The remaining lamps are used to monitor key points in all other units of the system. The view of system status provided by these lamps is especially important in debugging maintenance programs.

The console also provides three additional displays. A cathode ray tube display of the program flow is obtained by using a digital-to-analog converter on a program store address register. Because the No. 1 ESS is controlled by a repetitive executive control program, this display provides a picture which gives immediate indication of program response to external inputs and detection of anomalies in program flow.

For call stores, in which 24-bit words are stored, there are two console displays. One makes use of program control to display the contents of any set of 31 call store locations as a 31 × 24 array of spots on a cathode ray tube. Another circuit, not program-controlled, uses a bank of 24 lamps to provide a continuous display of the contents of any selected call store location.

The console and central control manual tester both provide similar control of the central control clock for stopping, manually stepping, and

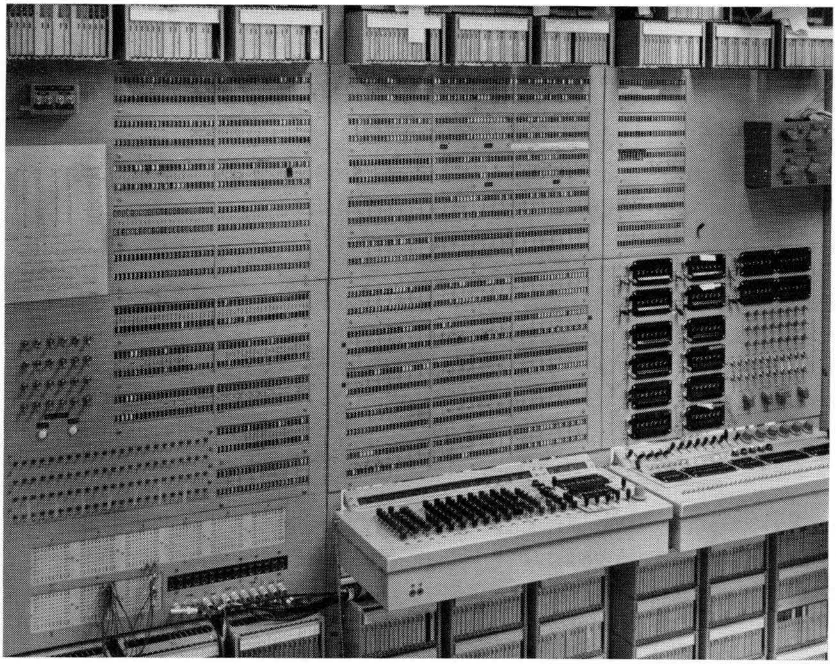

Fig. 4 — Program test console.

inserting simulated inputs. The console connects to all units of the duplicated system, while a central control manual tester can be connected to only a single central control. The console is capable of more fully controlling the duplicated system, as well as being able to control either half. In addition, the console provides manual control over many of the important maintenance features such as the inhibition of system interrupts.[4]

A simplified picture of program debugging closely parallels that of circuit debugging. Inputs are applied and outputs are checked. If trouble is suspected, internal conditions must be examined. To obtain easy access to information about any selected point in a program, flagging facilities are provided in the console and the central control manual tester. A flag is a signal generated under specified conditions which can be used to (a) stop the system, (b) light a lamp, or (c) interrupt the system. The console has provisions for generating fourteen distinct flags. The mechanisms for generating flags are:

(1) program address match — There are eight sets of switches on which program addresses can be set up. Whenever the central control

addresses the program store to an address which has been selected, a flag is generated.

(2) call store address match — There are four sets of switches used to select call store addresses in a manner similar to selecting program store addresses. In addition, reading or writing and/or a bit configuration for the data may be specified as additional conditions on the generation of flags.

(3) call store block match — There are two call store block match circuits identical to the call store address match circuits except that two sets of switches are provided with each circuit to define a range of addresses. The address condition for the flag is satisfied whenever a call store address is used which falls within a selected range.

3.2 *Programmed Facilities*

To expedite program debugging a programmed ESS utility system has been designed around the flag generators. The teletype or card reader is used to insert information into the system to define the function to be performed when a flag generator causes an interrupt. The function to be performed can be made up of any combination of the following:

(1) dump — The contents of call store or central control memory locations are written on the teletypewriter, high-speed printer, or TRAP magnetic tape.

(2) write — Information previously entered in the system (via card reader, teletypewriter or magnetic tape) is transferred into preselected call store or central control memory locations.

(3) trace — This sets up a central control mode which causes a dump to be performed at each program transfer.

Upon the completion of any of the above items, program control is transferred back to the point which was interrupted.

(4) jump — Jump specifies a program address to which control is transferred.

(5) patch — This causes the system to transfer program control to instructions which have been previously written in the call store.

The utility system outlined above was designed to be usable, with some restrictions, for program debugging using the central control manual tester. Most of the restrictions arise because the central control manual tester does not have any call store block match circuits and has only two program store and two call store address match circuits.

The program debugging facilities described were designed so that program test conditions could be submitted to the system and results obtained with a minimum expenditure of ESS machine time.

IV. OPERATIONAL TESTING

Operational testing verifies that the hardware and the system program satisfy system requirements. So as not to delay the introduction of a new system into service, this phase of testing must be started early enough to insure time to take corrective action as required.

The early systems must be subjected to extensive operational testing. These tests, among other things, must

(a) check all call features without and with traffic,
(b) verify traffic handling capability,
(c) verify traffic counts,
(d) verify AMA accuracy,
(e) check all maintenance features,
(f) evaluate maintenance dictionaries,
(g) check system capability at temperature and voltage limits, and
(h) check transmission and crosstalk characteristics.

At later installations these items will be tested, but much less extensively. In addition, installation tests include other items such as

(a) verify all translations (lines, trunks, etc.),
(b) test all lines, and
(c) test all trunk circuits.

V. EXPERIENCE

Fig. 5 presents a simplified picture of key events in the testing of the Holmdel system during the year 1963. The arrival times of the central controls (CC's) and the program stores (PS's) are shown. System testing did not really start until the receipt of program store 1. Prior to that time central control 1, which was shipped from the factory without benefit of factory testing, underwent extensive manual testing. The early manual tests were primarily of continuity, while later tests were functional, using program instructions inserted via the central control manual tester. Intervals for the wiring of major central control design changes are also indicated. The start of the use of X-ray programs, the beginning of system program debugging on one shift, and the expansion of this effort to two shifts as well as the first No. 1 ESS telephone call made using an X-ray program are also shown.

Fig. 6 presents a simplified picture of key events in the testing of the Succasunna system.

Figs. 7 and 8 show the total number of troubles cleared per month at Holmdel and Succasunna during 1963. They are broken down into three categories: wiring, circuit pack, and other troubles.

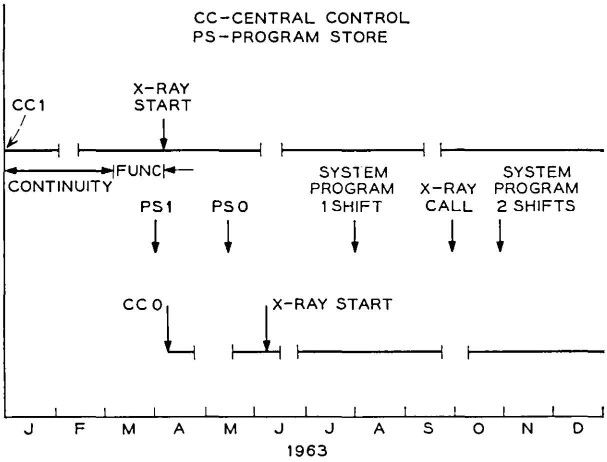

Fig. 5 — Holmdel system events.

Circuit pack troubles were running about 35 a month on the Holmdel system and somewhat higher than this at Succasunna at the end of 1963. There are approximately 11,500 circuit packs in each of the systems. Experience with the Morris ESS[7] and other electronic systems indicates that an order-of-magnitude reduction can be expected in the package failure rate as an electronic system moves from the testing and wiring change period into service.

Many of the earlier wiring troubles encountered at Holmdel were attributable to the factory. A lower proportion of the wiring troubles at

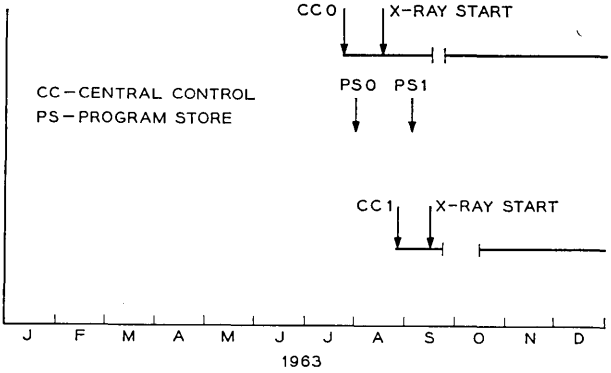

Fig. 6 — Succasunna system events.

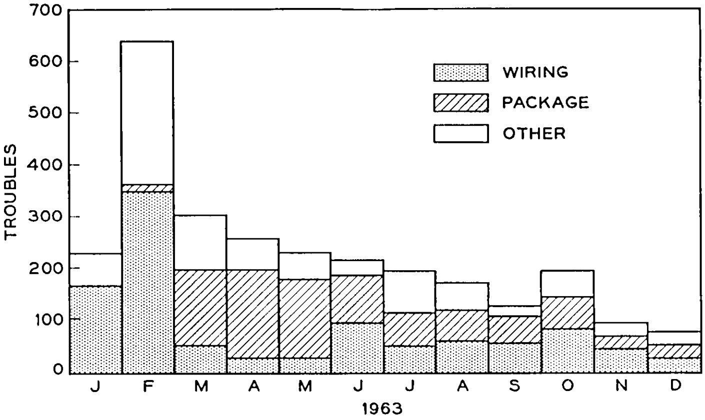

Fig. 7 — Troubles cleared per month at Holmdel.

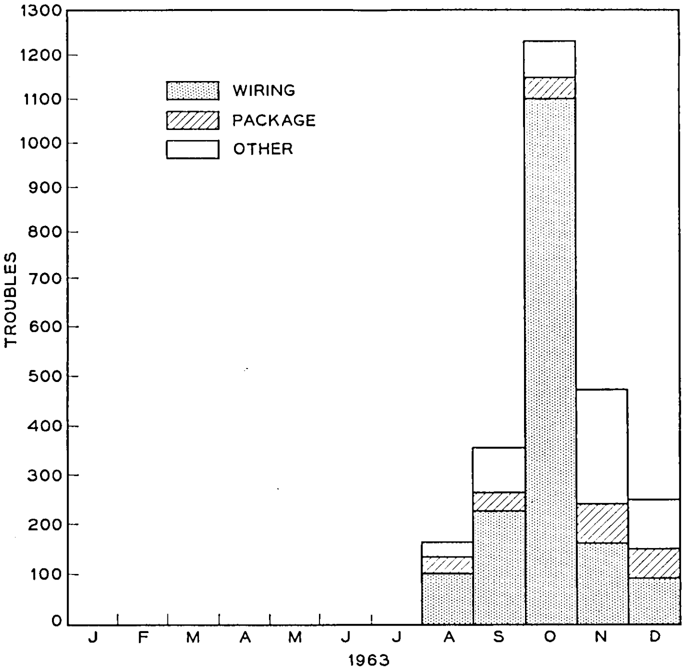

Fig. 8 — Troubles cleared per month at Succasunna.

Succasunna are attributable to the factory. They, like the later wiring troubles at Holmdel, are more frequently chargeable to installation and design change wiring.

Included in the category of other troubles are logic and circuit design problems uncovered in system testing. This source has been a major contributor to design changes necessary to realize an operational system.

The principal sources of program problems are programming error, clerical error, requirement change and program improvement. Fig. 9 shows the number of program problems encountered per month on the Holmdel system during 1963. These were found and corrected while debugging X-ray and system programs. Since Holmdel is the first No. 1 ESS, it was necessary to do much of this work, particularly the debugging of X-ray programs, concurrently with the debugging of the hardware. On the average, one program problem was cleared for every 55 program words verified.

System testing using X-ray programs read from program stores began at Holmdel on April 5, 1963 (see Fig. 5) and at Succasunna on August 16, 1963 (see Fig. 6). This work was carried out on a two- and three-shift basis at both places. Fig. 10 gives the number of troubles cleared per shift-month at Holmdel and Succasunna and makes a comparison by referencing them to the month in which X-ray testing started at each location. As can be seen, troubles were found at a faster rate at Succasunna than at Holmdel. The major reason for this is that testing on the Succasunna system made use of X-ray programs that had already been debugged on the Holmdel system.

The size of a system hardware testing task is dependent not only on the number of system units involved but also on their complexity. Complex units have larger X-ray programs associated with them than less complex units. This suggests better ways of measuring the size of a system hardware testing task than merely totaling the number of units in-

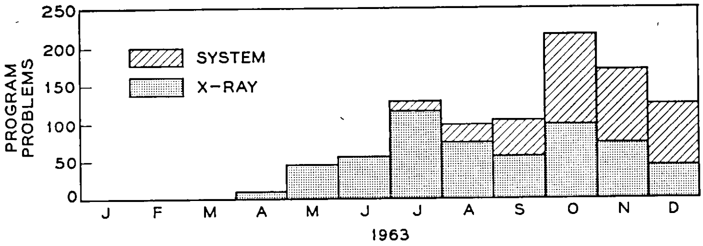

Fig. 9 — Program problems encountered per month on the Holmdel system.

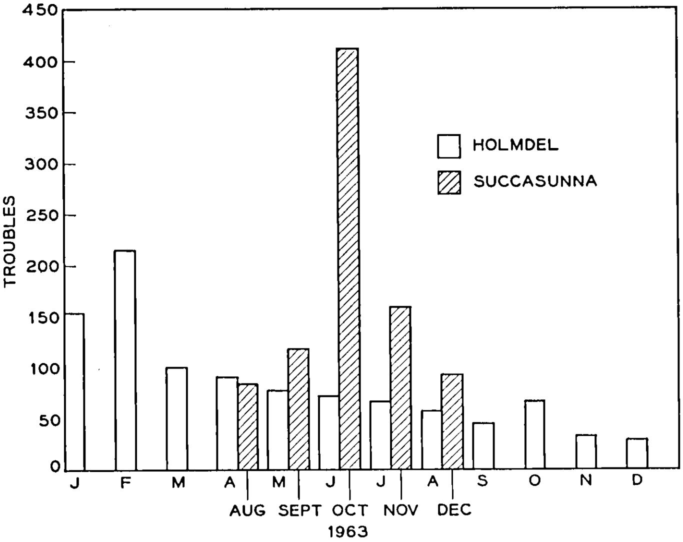

Fig. 10 — Troubles cleared per shift-month at Holmdel and Succasunna.

volved. A more meaningful and easy-to-use measurement is the sum of the products of the number of units and the number of associated X-ray program words, unit-words. This concept is illustrated for several No. 1 ESS units in Table II.

Using cumulative unit-words per shift, a comparison of the initial progress at Holmdel and Succasunna is given in Fig. 11. The solid-line curves show the progress by actual date. The dashed-line curve references the progress at Succasunna to the Holmdel X-ray start date. The more rapid progress at Succasunna was made possible by the use of debugged X-ray programs and by the absence of troubles common to both systems that had already been cleared at Holmdel.

Fig. 12 is a plot of the progress made in debugging X-ray programs concurrent with their use in debugging the Holmdel system hardware. As can be seen, the verification of these programs was nearing completion

TABLE II — UNIT-WORDS FOR REPRESENTATIVE UNITS AT SUCCASUNNA

Unit	Number	Words/Unit	Unit-Words
Central control	2	19,100	38,200
Central pulse distributor	2	840	1,680
Call store	4	3,750	15,000
Master scanner	2	1,120	2,240

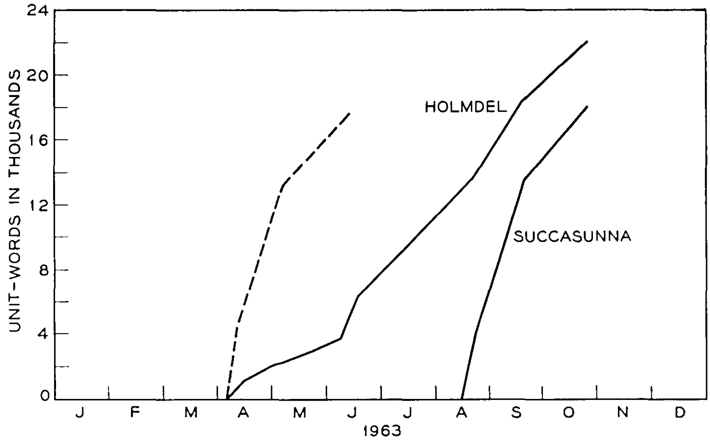

Fig. 11 — Cumulative unit-words per shift at Holmdel and Succasunna.

at the end of 1963. Also shown is the early experience in debugging system and utility (see Section III) programs. By using the data given in this figure and the dates on which system program debugging started as a one-shift and later two-shift operation (see Fig. 5), it can be calculated that an average rate of 2000 words per shift-month was realized.

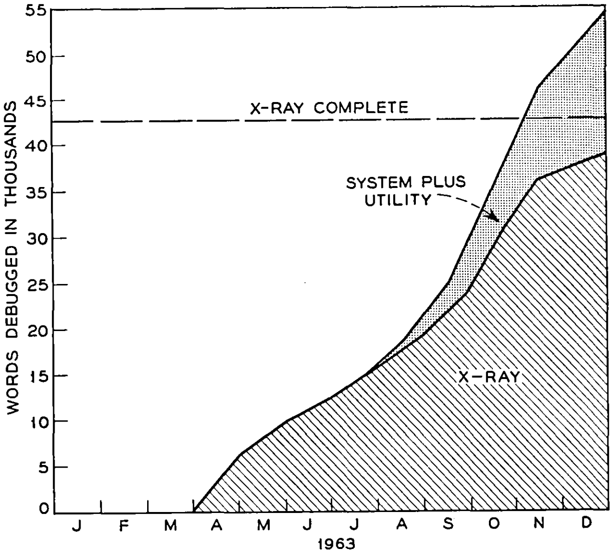

Fig. 12 — Program debugging progress on the Holmdel system.

VI. ACKNOWLEDGMENTS

The authors wish to thank their numerous colleagues who participated in test planning, the development of test facilities and programs, and in carrying out the testing reported on in this paper. The contributions and assistance of T. T. Butler, R. S. Cooper, T. S. Greenwood, B. G. Hemmendinger, F. R. Huff, J. L. Kodner, H. D. Straley and D. R. Teeters deserve particular mention. The advice and encouragement of H. E. Vaughan has been of great value.

REFERENCES

1. Keister, W., Ketchledge, R. W., and Vaughan, H. E., No. 1 ESS System Organization and Objectives, B.S.T.J., this issue, p. 1831.
2. Downing, R. W., Nowak, J. S., and Tuomenoksa, L. S., No. 1 ESS Maintenance Plan, B.S.T.J., this issue, p. 1961.
3. Connell, J. B., Hussey, L. W., and Ketchledge, R. W., No. 1 ESS Bus System, B.S.T.J., this issue, p. 2021.
4. Harr, J. A., Taylor, F. F., and Ulrich, W., Organization of No. 1 ESS Central Processor, B.S.T.J., this issue, p. 1845.
5. Cagle, W. B., Menne, R. S., Skinner, R. S., Staehler, R. E., and Underwood, M. D., No. 1 ESS Logic Circuits and Their Application to the Central Control, B.S.T.J., this issue, p. 2055.
6. Ulrich, W., and Vellenzer, Mrs. H. M., Translations in the No. 1 Electronic Switching System, B.S.T.J., this issue, 2533.
7. Haugk, G., and Yokelson, B. J., Experience with the Morris Electronic Switching System, IEEE Trans., Part 1, Comm. and Elect., No. 64, Jan., 1963, pp. 605–610.
8. Tsiang, S. H., and Ulrich, W., Automatic Trouble Diagnosis of Complex Logic Circuits, B.S.T.J., **41,** July, 1962, pp. 1177–1200.

Contributors to This Issue

Cyrus F. Ault, B.E.E.E., 1950, University of Southern California; M.S., 1955, Stevens Institute of Technology; Bell Telephone Laboratories, 1955—. He first worked on the electronic switching of the Morris, Illinois, trial installation. He is now working on the program store (twistor) of No. 1 ESS. Member, IEEE.

Rulon Biddulph, B.S., 1925, Brigham Young University; Bell Telephone Laboratories, 1929—. Mr. Biddulph has engaged successively in investigations of the physiological acoustics of the hearing process, optical recording and reproduction of stereophonic sound, magnetic recording, antisubmarine subsurface ordnance, acoustic torpedoes, the structure and specification of speech, and the automatic recognition of spoken digits. He is currently concerned with transmission aspects of No. 1 ESS. Member, Acoustical Society of America.

Albert H. Budlong, B.N.S., 1945, B.E.E., 1948, M.S. (Physics), 1950, faculty, 1950–1953, Marquette University; Bell Telephone Laboratories, 1953—. He was initially associated with a group engaged in switching training and later supervised a group conducting switching training courses. He currently supervises a group engaged in the design of trunk and service circuits for No. 1 ESS. Member, Sigma Pi Sigma and Pi Mu Epsilon. Visiting Lecturer in Electrical Engineering at Stevens Institute of Technology.

William B. Cagle, B.S.E.E., 1953, University of Oklahoma; Bell Telephone Laboratories, 1953—. Mr. Cagle was first engaged in the design of semiconductor logic circuits for the Morris, Illinois, experimental electronic switching system. He subsequently supervised the characterization of the semiconductor devices, design of the logic circuits, and logic design of the central control and signal processor for No. 1 ESS. At present he heads a department responsible for development of the PICTUREPHONE set, mobile telephones, and exploratory development of lineless telephones. Member, IEEE, Tau Beta Pi, Eta Kappa Nu and Sigma Tau.

DAVID H. CARBAUGH, B.S.E.E., 1959, University of Pittsburgh; M.E.E., 1961, New York University; Bell Telephone Laboratories, 1959—. At the Laboratories he has been chiefly concerned with the system program development of No. 1 ESS.

R. C. CASTERLINE, B.S.E.E., 1956, Newark College of Engineering; Western Electric Co., 1941–1951; Bell Telephone Laboratories, 1951—. With Western Electric, Mr. Casterline was engaged in the inspection and testing of radio and radar equipment. With Bell Laboratories he was until 1956 a member of the component development department, where he was engaged in testing and evaluating ferroelectric devices and analog computer networks. In 1956 he transferred to the electronic switching department and has been concerned with circuit design for the Morris, Illinois, field trial and with trunk and service circuit development for No. 1 ESS.

J. G. CHEVALIER, B.E.E., 1951, Ohio State University; Bell Telephone Laboratories, 1956—. He has been engaged in various phases of printed wiring processes and applications for military projects and No. 1 ESS. More recently he has worked on the design and packaging of electronic equipment and the study of contact finishes.

JOSEPH B. CONNELL, B.S., 1958, University of Rhode Island; M.E.E., 1960, New York University; Bell Telephone Laboratories, 1958—. Mr. Connell worked on the maintenance planning aspects of the No. 1 ESS system design and served as an instructor in the communications development training program. He presently supervises a group responsible for generating systems engineering requirements dealing with new applications and new services for No. 1 ESS. Member, IEEE, Tau Beta Pi and Phi Kappa Phi.

DANIEL DANIELSEN, Ing. (Electrical Engineering), 1949, Stockholm Technical Institute; Bell Telephone Laboratories, 1953—. He was engaged in the circuit design and systems development of several phases of electronic switching systems. He has worked on the recording of AMA data on magnetic tape, data transmission over voice-frequency channels, and switching network design for No. 1 ESS. At present, he is concerned with the problem of interchange of data between No. 1 ESS and remotely located data recording systems.

H. J. DOUGHERTY, B.S.E.E., 1955, M.S.E.E., 1956, University of Maine; New England Telephone and Telegraph Co., 1941–1956; Bell

Telephone Laboratories, 1956—. He was first engaged in the design and development of circuits for the experimental electronic switching system. More recently he has been concerned with formulating systems engineering requirements for electronic switching systems. He presently supervises a group responsible for ESS operating requirements and maintenance. Member, IEEE and Tau Beta Pi.

Randall W. Downing, B.S.E.E., 1959, University of Washington; M.E.E, 1961, New York University; Bell Telephone Laboratories, 1959—. He has been concerned primarily with the problems of providing automatic maintenance facilities for electronic switching systems. He presently supervises a group responsible for the maintenance planning and programming for the control units of No. 1 ESS. Member, ACM, IEEE, Phi Beta Kappa, Tau Beta Pi and Eta Kappa Nu. Associate Member, Sigma Xi.

Glen G. Drew, B.S.E.E., 1936, Rutgers University; Bell Telephone Laboratories, 1946—. After assisting in the development of automatic message accounting and crossbar tandem circuits, he worked with an exploratory development group studying the introduction of electronic techniques to telephone switching. Since then he has been engaged in various aspects of electronic switching developments. He currently supervises a group responsible for the introduction of metropolitan office features in No. 1 ESS. Member, Tau Beta Pi, Phi Beta Kappa and IEEE.

Kermit S. Dunlap, B.S. (Eng. Physics), Lehigh University, 1937; Bell Telephone Laboratories, 1937—. He first joined an acoustics research group, where he was concerned with tone generators for customer key pulsing systems. During World War II, he worked on antiaircraft fire-control analog computers. In 1946, he joined the newly formed electronic switching research group, where he was engaged in the first electronic switching experimental projects. In 1954, he transferred to the No. 1 ESS development department, where he now supervises the group on switching network design. Member, IEEE and Phi Beta Kappa.

R. K. Eisenhart, B.S.M.E., 1957, Pennsylvania State University; M.E.E., 1959, New York University; Bell Telephone Laboratories, 1957—. Mr. Eisenhart was first engaged in the development of the automatic photographic processor used in conjunction with the flying-spot store of the Morris electronic switching system. At present he supervises a group responsible for the design of apparatus and equipment used in No. 1 ESS. Member, Pi Tau Sigma and Tau Beta Pi.

ALEXANDER FEINER, M.S. (Electrical Engineering), 1952, Columbia University; Bell Telephone Laboratories, 1953—. He has been engaged in the application of electronic techniques to switching. At present he heads a department responsible for the development of switching networks, trunks and scanners, and for transmission aspects of No. 1 ESS. Member, Sigma Xi.

JAMES G. FERGUSON, B.S.E.E., 1923, Queen's University (Canada); Northern Electric Co., 1923–1926; Bell Telephone Laboratories, 1926—. Prior to World War II he developed equipment for step-by-step central offices, community dial offices, private branch exchanges, and station systems. Through the war, he supervised the equipment development of a variety of radio and radar projects. From 1945 to 1958 he was responsible for the equipment development of the No. 5 crossbar, and since that time he has made equipment studies for No. 1 ESS. Life member, IEEE.

LAIMONS FREIMANIS, Technische Hochschule, Munich; B.S.E.E., 1951, M.S.E.E., 1952, Michigan State University; Bell Telephone Laboratories, 1952—. He first worked on development of signaling systems for Civil Aeronautics Administration networks. Since completing the communications development training program he has been engaged in exploratory and development work on electronic switching systems. Member, Tau Beta Pi, Eta Kappa Nu and Sigma Pi Sigma.

DOLIVE L. FUNK, B.E.E., 1956 and M.S.E. (E.E.), 1957, University of Florida; Bell Telephone Laboratories, 1957—. He prepared the switching network controller automatic maintenance for the ESS trials at Morris, Ill. On No. 1 ESS he worked on the duplication, switching, and maintenance of the central pulse distributor and was also responsible for designing the automatic maintenance of trunk and service circuits. He is currently planning the operational testing of No. 1 ESS. Member, IEEE.

LEE E. GALLAHER, B.S.E.E., 1951, M.S.E.E., 1956, Case Institute of Technology; Bell Telephone Laboratories, 1955—. He first worked on the design of the flying-spot store for the Morris experimental central office, and later worked on the design of the program stores for No. 1 ESS. Member, Sigma Xi and Tau Beta Pi.

RICHARD M. GENKE, B.S.E.E., 1954, University of Wisconsin; M.S.E.E., 1961, Columbia University; Bell Telephone Laboratories, 1954—. Since 1954 Mr. Genke has been engaged in memory system development for electronic switching systems, including the barrier grid store for the Morris electronic central office and the No. 1 ESS call store. Member, Tau Beta Pi and Eta Kappa Nu.

H. GHIRON, B.S., 1952, M.S., 1954, Massachusetts Institute of Technology; Bell Telephone Laboratories, 1955—. He has been engaged in systems development work, first for the Morris ESS experiment and currently for the No. 1 ESS. Member, A.C.M., IEEE and Sigma Xi.

L. F. GOELLER, JR., B.E.E., 1953, M.E.E., 1954, University of Virginia; Bell Telephone Laboratories, 1954—. Since coming to Bell Laboratories he has worked on circuits for electronic switching systems. Member, IEEE.

T. SPENCER GREENWOOD, B.S.E.E, 1951, Northeastern University; M.S.E.E, 1953, Massachusetts Institute of Technology; Bell Telephone Laboratories, 1953—. Since starting at the Laboratories, Mr. Greenwood has been associated with the development of memory systems for electronic switching. These included the barrier grid store and flying-spot store used in the Morris experimental electronic switching system, and the permanent magnet twistor store for No. 1 ESS. Member, Eta Kappa Nu, Tau Beta Pi, Sigma Xi and IEEE.

W. E. GRUTZNER, B.S.E.E, 1935, Cooper Union; Bell Telephone Laboratories, 1925—. He first worked for the Laboratories as an office boy, draftsman, and instructor. Since 1935 he has worked in various equipment development organizations, including trial installations; panel, step-by-step, and toll analyzation; radar development; and No. 1 and No. 5 crossbar. He also worked in the systems engineering department, where he supervised a group responsible for the establishment of requirements for audio recording and announcement systems. At present, he is in charge of a group responsible for the equipment development of No. 1 ESS switching networks and associated peripheral equipment.

ANTHONY M. GUERCIO, B.S.E.E., 1955, Mississippi State University;

M.S.E.E., 1960, New York University; Bell Telephone Laboratories, 1955—. He was initially associated with a group developing the flying-spot store. After completing the communications development training program, he worked on scanners until recently. He is now a member of a common systems circuit group. Member, Tau Beta Pi and Phi Kappa Phi.

PHILIP A. HARDING, B.E.E., 1954, Cooper Union; M.S.E.E., 1960, Columbia University; Bell Telephone Laboratories, 1954—. He has been primarily concerned with the development of No. 1 ESS call stores. He presently supervises a group concerned with development of memories, design of logic circuits, and evaluation of semiconductor devices for application in No. 1 ESS and the DAC systems. Member, Tau Beta Pi.

J. A. HARR, B.S., 1940, Roanoke College; M.S. (Applied Science), 1951, Harvard University; Bell Telephone Laboratories, 1955—. Mr. Harr worked in the Harvard Computation Center from 1947 to 1955. His work involved both design and programming of computers developed by the staff of the computation center. Since 1955 he has been engaged in both the design of central control equipment and programming of the electronic switching system. He is now Head, Electronic Switching Programs Department. Member, Harvard Engineering Society.

G. HAUGK, B.S.E.E, 1952, Newark College of Engineering; New York University; Western Electric Company, 1947–1948; Bell Telephone Laboratories, 1952—. After completing the communications development training program course, Mr. Haugk worked on design of circuits for electronic switching systems for three years. Following this he supervised a group responsible for field trial and testing of electronic switching systems. He presently heads a department responsible for No. 1 ESS evaluation, personnel training, and information activities. Member, IEEE.

W. S. HAYWARD, JR., A.B., 1943, S.M., 1947, Harvard University; Bell Telephone Laboratories, 1947—. He was first engaged in traffic studies of telephone switching systems. Since 1958 he has been working on the systems engineering of the No. 1 ESS. Member, IEEE, Operations Research Society of America, Association for Computing Machinery and Society of Harvard Engineers and Scientists.

H. ROBERT HOFMANN, B.E.E., 1957, University of Florida; M.E.E., 1962, New York University; Bell Telephone Laboratories, 1957—. Mr. Hofmann first worked on the experimental ESS remote line concentrator, followed by work on the ferreed switch. Later he was involved in the design of the ferrod used in the No. 1 ESS scanner. More recently he was concerned with circuits for the No. 1 ESS switching network control. At present, he is working on the addition of centrex to No. 1 ESS. Member, Sigma Tau.

ERNA S. HOOVER, B. A., 1948, Wellesley College; Ph.D., 1951, Yale University; Bell Telephone Laboratories, 1954—. Mrs. Hoover has been engaged in systems engineering studies, including the formulation and evaluation of the system plans for the No. 1 ESS data processor and its program. Member, Association for Computing Machinery, Association for Symbolic Logic, American Philosophical Association and Phi Beta Kappa.

LUTHER W. HUSSEY, A. B., 1923, Dartmouth College; A.M., 1924, Harvard University; B.S.E.E., 1930, Union College; Bell Telephone Laboratories, 1930—. Mr. Hussey's major activities have been in the development and application of semiconductor devices, starting with studies of copper-oxide and similar devices for modulators in carrier systems, and magnetic materials such as permalloy for amplifiers and pulse generators. He was active in the early development of transistors and in exploratory work on their applications. At present he is supervising a group working in the control area of No. 1 ESS. Senior member, IEEE.

WILLIAM KEISTER, B.S.E.E., 1930, Alabama Polytechnic Institute; Bell Telephone Laboratories, 1934—. His early work with Bell Laboratories was on switching and signaling systems. During World War II, he instructed Army and Navy personnel on the operation and maintenance of fire-control radar equipment. He organized and taught courses on switching circuit design to Laboratories personnel and is co-author with A. E. Ritchie and S. H. Washburn of the book *The Design of Switching Circuits*. In 1958 he was appointed Director, Electronic Switching Systems Engineering Center, with responsibility for the engineering planning of electronic telephone switching systems. Member, IEEE, Eta Kappa Nu, Tau Beta Pi and Phi Kappa Phi.

RAYMOND W. KETCHLEDGE, B.S. and M.S., 1942, M.I.T.; Bell Telephone Laboratories, 1942—. Until 1946 he was associated with military developments in the fields of infrared detection and underwater sound. During the next six years, Mr. Ketchledge participated in the development of a submarine cable system and a broadband coaxial carrier system. In 1953 he became responsible for gas tube and storage tube development as an electron tube development engineer. The next year he was appointed a switching system development engineer, responsible for electronic memories and switching networks for electronic switching systems. Mr. Ketchledge was made Assistant Director of Switching Systems Development in 1956. He became Director, Electronic Switching Laboratory at Holmdel in 1959. He has had 51 U.S. patents issued and 5 are pending. Member, Sigma Xi; Senior Member, IEEE.

D. C. KOEHLER, B.S.E., 1941, University of Illinois; M.S.E.E., 1950, Stevens Institute of Technology; Bell Telephone Laboratories, 1941—. He first participated in the mechanical design of the M9 gun data computer, various bombsight and antiaircraft radar equipment, the M13 depth-charge mechanism, and switching relays. Since 1954 he has supervised the mechanical design of the memory systems for both the Morris trial and No. 1 ESS. These systems have included the barrier grid store, the flying-spot store, the ferrite sheet call store, the twistor program store, and related equipment for handling and writing the twistor memory cards. He is also responsible for the No. 1 ESS frameworks, cable racks and end guards. Member, Tau Beta Pi and Phi Kappa Phi.

N. A. MARTELLOTTO, B.E.E., B.S. (Applied Mathematics), 1957, Georgia Institute of Technology; M.S.E.E., New York University, 1959; Bell Telephone Laboratories, 1957—. Mr. Martellotto was initially associated with the Bell System data processing project, where he did some preliminary logic design work and also contributed to a machine aids to design program system. Using a general-purpose computer as a tool, he later did exploratory work on the analysis of logic circuits and also completed an interpretive simulation program for the No. 101 electronic switching system. He currently supervises the compiler program group in No. 1 ESS with the responsibility for developing several utility system programs. Member, IEEE, Tau Beta Pi and Eta Kappa Nu.

HAROLD F. MAY, B.S.E.E., Cooper Union, 1927; graduate studies at New York University and Polytechnic Institute of Brooklyn; P.E., New York State; New York Telephone Company, 1922–1929; Teleregister Corporation, 1929–1954; Bell Telephone Laboratories, 1954—. He has been associated with special customer service developments, stock quotation services, air traffic control, military digital and analog computer simulators, magnetic drum applications to crossbar systems, and electronic switching systems. At present, he is supervising a group which is concerned with peripheral sensing and control functions and transmission in No. 1 ESS. Member, IEEE, Communications Switching Committee and Communications Division.

ROBERT S. MENNE, B.E.E., 1953, Clarkson College of Technology; M.S.E.E., 1959, Newark College of Engineering; Bell Telephone Laboratories, 1953—. After completing the communications development training program, he worked on transmission system terminal equipment. Since 1958 he has been engaged in the logic design of circuits for the No. 1 ESS central control. Member, Eta Kappa Nu.

J. S. NOWAK, Bell Telephone Laboratories, 1955—. Mr. Nowak has worked in the system planning area on the Morris experimental electronic telephone central office. He is currently concerned with the system planning and maintenance requirements for No. 1 ESS.

H. OEHRING, B.S. (Mathematics), Lafayette College, 1958; M.S. (Mathematics), Ohio University, 1960; Bell Telephone Laboratories, 1960—. He has assisted in the assembler and macro language design of PROCESS III, written utility routines for computers, and engaged in military systems probability studies. Currently, he is engaged in real-time programming and debugging of the No. 1 ESS stored program. Member, Sigma Pi Sigma.

MARVIN C. PAULL, B.E.E., 1952, Clarkson College of Technology; Bell Telephone Laboratories, 1953—. At Bell Laboratories his work has included studies in the use of magnetic cores in computer design, research and development in the logical design of computer circuitry, and computer programs. Member, IEEE, Eta Kappa Nu and Tau Beta Pi.

HELMO RAAG, B.S.E.E., 1953, Oklahoma State University; M.S.E.E., 1959, New York University; Bell Telephone Laboratories, 1953—. He completed the communications development training program in 1956. He was first engaged in the development of the flying-spot store and permanent magnet twistor memory systems for electronic switching systems, and later supervised a group concerned with the development of the ferreed crosspoint. Since 1962 he has been supervisor of the group developing the master control center for the No. 1 ESS project. Member, Eta Kappa Nu, Phi Kappa Phi and Pi Mu Epsilon.

Philip G. Ridinger, B.S.E.E., 1950, Lehigh University; M.S.E.E., 1960, Stevens Institute of Technology; Bell Telephone Laboratories, 1950—. He has been engaged in the exploratory development of remote line concentrators, ferreed crosspoints, and space division switching networks. More recently he worked on the design of the master control center for No. 1 ESS, and is presently in charge of a group responsible for the design of common systems circuits and the remote switching unit. Member, Eta Kappa Nu and Tau Beta Pi.

Robert S. Skinner, B.S.E.E., 1939, University of Kansas; Southwestern Bell Telephone Company, 1939–1942; Bell Telephone Laboratories, 1942—. Mr. Skinner has been engaged in the development of military radar systems, the Nike-Ajax system, and the civil emergency reporting system, as well as a variety of telephone switching systems. He presently supervises a group responsible for control equipment design for electronic switching systems. Senior member, IEEE.

Michael T. Skubiak, B.S.M.E., 1959, University of Akron; M.S.E.M., 1963, Ohio State University; Bell Telephone Laboratories, 1959—. He has been engaged in the development of the printed wire board connector, four-wire ferreed switch, and the distributing frames for No. 1 ESS. He currently is a supervisor of an equipment design group for UNICOM. Member, Sigma Tau, Pi Mu Epsilon and Sigma Xi.

Robert B. Smith, A.B., 1950, M.A., 1951, Ph.D., 1957, Yale University; Bell Telephone Laboratories, 1956—. Mr. Smith has been engaged in programming development for electronic switching systems. He is at present in charge of a group preparing call processing programs for No. 1 ESS. Member, Association for Computing Machinery, American Mathematical Society and Phi Beta Kappa.

Robert E. Staehler, B.S.E.E., 1947, The College of the City of New York; M.S.E.E., 1948; further graduate studies, Polytechnic Institute of Brooklyn; Bell Telephone Laboratories, 1948—. His early work was on local signaling systems, voice-frequency toll signaling systems, and early Nike missile trainer studies. Since 1953 he has been engaged in development work on electronic switching systems. He headed the department responsible for the development of the memory systems for the experimental field trial of the electronic central office in Morris, Illinois, and the central control and temporary memory circuits for No. 1 ESS. Currently, as Director, Electronic Switching Projects Laboratory, he has responsibility for the development of electronic voice, message, and data switching projects. Member, IEEE, Eta Kappa Nu, Tau Beta Pi and Sigma Xi.

A. A. STOCKERT, B.S.E.E., 1957, University of Dayton; M.S.E.E., 1959, New York University; Bell Laboratories, 1957—. He was first engaged in the design of aircraft control data links. He is currently engaged in maintenance program planning for No. 1 ESS.

FRANK F. TAYLOR, B.S.E.E., 1955, University of Kentucky; Bell Telephone Laboratories, 1955—. His work at Bell Laboratories has included circuit and logic design in the development of electronic telephone switching systems. He has also taught courses in electronic switching as part of the Laboratories sponsored operating engineers training program. Member, Eta Kappa Nu and Tau Beta Pi.

S. H. TSIANG, B.S., 1947, University of Nanking; M.S., 1949, Carnegie Institute of Technology; Union Switch and Signal, 1949–1956; Bell Telephone Laboratories, 1956—. Mr. Tsiang has worked on maintenance and administration circuits and requirements for an experimental electronic central office. Currently he is engaged in test planning, programming and field testing for the No. 1 electronic switching system.

LEE S. TUOMENOKSA, B.S., 1952, Worcester Polytechnic Institute; S.M., 1954, Massachusetts Institute of Technology; Bell Telephone Laboratories, 1954—. Mr. Tuomenoksa first worked on operational program design for the Morris experimental switching system. Since then he has supervised a group responsible for No. 1 ESS maintenance planning and programming. Member, IEEE, ACM, Tau Beta Pi, Sigma Xi and Eta Kappa Nu.

W. ULRICH, B.S., 1952, M.S., 1953, Dr. Eng. Science, 1957, Columbia University School of Engineering; Bell Telephone Laboratories, 1953—. Mr. Ulrich was first engaged in the design of automatic maintenance circuits and programs for the experimental electronic central office installed in Morris, Illinois. In 1959, he started working on the No. 1 ESS; on this project, he worked on over-all systems coordination, central control organization, control of the network, translations, and the equipment numbering and addressing plan. Since February, 1964, he has headed a department developing programs for UNICOM, a military communications system.

M. DEAN UNDERWOOD, B.S., 1952, Pennsylvania State University; Bell Telephone Laboratories, 1952—. Mr. Underwood's early work was concerned with improving the properties of point contact diodes. Since graduating from the communications development training program, he has been engaged in the design of semiconductor circuits for applications in electronic switching systems.

H. EARLE VAUGHAN, B.S. (in C.E.), 1933, Cooper Union; Bell Telephone Laboratories, 1928—. Mr. Vaughan joined the transmission research department in 1928. He was first engaged in work on voice-operated devices and studies of the effects of speech and noise on voice frequency signaling systems. During World War II he worked on anti-aircraft computers, fire-control radar, and other military projects. He was later concerned with digital techniques and systems, data transmission, and electronic switching systems. He holds many patents and has written several papers in technical journals. He was appointed switching systems research engineer in 1955, and Director of Systems Research in 1958, in charge of research on television, mobile radio, switching and integrated communication systems. He was appointed Director, Electronic Switching System Center in 1962, with responsibility for system design and programming of a new electronic switching system. Fellow, IEEE.

HILDEGARD M. VELLENZER, M.S. (mathematics), 1939, Johann Wolfgang Goethe University, Frankfurt; Bell Telephone Laboratories, 1957—. Her entire career at Bell Laboratories has been in the area of electronic switching.

D. H. WETHERELL, B.S.E., 1923, Lafayette College; Western Electric Company, 1923; Bell Telephone Laboratories, 1925—. Mr. Wetherell worked on development of equipment for all types of telephone switching systems until World War II, when he was supervisor of a group responsible for the design of airborne radar systems for the armed forces. After the war, he supervised a group working on the development of equipment for toll telephone switching systems and later headed a group responsible for the development of circuits and equipment for nationwide dialing. At present, he is in charge of a department engaged in the design and development of equipment for No. 1 ESS.

L. ZIMMERMAN, B.E.E., 1952, Brooklyn Polytechnic Institute; Bell

Telephone Laboratories, 1952—. After completing the communications development training program course, Mr. Zimmerman worked in a telephone switching exploratory development group. Since 1956 he has been engaged in various aspects of testing electronic switching systems. Member, Eta Kappa Nu, Tau Beta Pi and Sigma Xi.

Index to No. 1 ESS Issue