83322240

CONTROL DATA

CDC® STORAGE MODULE DRIVE

BK5XX

DIAGRAMS
WIRE LISTS

Volume 2 of 2

HARDWARE MAINTENANCE MANUAL

REVISION RECORD

REVISION	DESCRIPTION
01 (09-15-76)	Preliminary manual released.
02 (09-26-76)	Incorporate I/O changes in diagrams.
03 (10-19-76)	Added diagrams applicable to 60 pin I/O and Sector and Index signals on B cable. Also corrected errors.
A (12-15-76)	Manual released including Engineering Change Orders 48092, 48151, 48240B, 48256.
B (05-11-77)	Manual revised including Engineering Change Orders 48437, 48560; Field Change Order 48518. Technical and editorial changes.
C (08-02-77)	Manual revised including Engineering Change Order 48477; Field Change Orders 48477 and 48560. Technical and editorial changes.
D (10-14-77)	Manual revised to include Engineering Change Order 48716. Technical and editorial changes.
E (01-30-78)	Manual revised to include Engineering Change Orders 48941, 48567. Technical and editorial changes.
F (03-28-78)	Technical and editorial changes.
G (06-09-78)	Manual updated to include 55807 (Release BK5A1D), 55112 and 55157. Update also includes technical and editorial changes.
H (10-05-78)	Manual updated with ECOs 55122, 55280, 55248A, and 55325A. Update includes technical and editorial changes.
J (02-02-79)	Manual updated with ECO 55229, 55492A, FCO 55492 plus additional technical and editorial changes.
K (05-23-79)	Manual updated with ECOs 55438, 55663, 55476A, 55682, 55697A, 55743, 55742, 55633A, 55728, 55658, FCO 55422 plus additional technical and editorial changes.

REVISION LETTERS I, O, Q AND X ARE NOT USED.

©1976,77,78,79,80,81,82,83 84,85
By Control Data Corporation
Printed in the United States of America

Address comments concerning this manual to:
Control Data Corporation
Twin Cities Disk Division
Customer Documentation Dept.
5950 Clearwater Drive
Minnetonka, Mn. 55343
or use Comment Sheet in the back of this manual.

REVISION RECORD (Contd)

REVISION	DESCRIPTION
L (08-01-79)	Manual updated with ECOs 55785, 55804, 55821, 55810, plus additional technical and editorial changes.
M (09-19-79)	Manual updated with ECOs 55835, 55854 plus additional technical and editorial changes.
N (11-20-79)	Manual updated with ECOs 55923, 55909, 55839, 55898 plus additional technical and editorial changes.
P (02-06-80)	Manual updated with ECOs 55992, 55956, 55844B, 60031, 60032, plus additional technical and editorial changes.
R (05-20-80)	Manual updated with ECOs 60136, 60137, 60115A plus additional technical and editorial changes.
S (07-09-80)	Manual updated with ECOs 60171, 60169, 60204, 55952A, plus additional technical and editorial changes.
T (12-11-80)	Manual updated with ECOs 60240, 60246, plus additional technical and editorial changes.
U (09-14-81)	Manual updated with ECOs 60448, 60450, 60467, 60453, 60499, DJ00007, DJ00022, DJ00023, DJ00026, FCO 60448, plus additional technical and editorial changes.
V (12-22-81)	Manual updated with ECOs DJ00021, DJ00030, DJ00046, DJ00075, DJ00085, DJ00099, DJ00180, plus additional technical and editorial changes.
W (05-05-82)	Manual updated with ECOs DJ00201, DJ00207, DJ00219, DJ00275, FCO DJ00201, plus additional technical and editorial changes.
Y (06-02-83)	Manual updated with ECOs DJ00436, DJ00228, plus additional technical and editorial changes.
Z (07-25-84)	Manual updated with ECO DJ00399A, plus additional technical and editorial changes.
AA (02-08-85)	Manual update with ECO DJ00771 (class II ECOs DJ00666, 708A, 728A, 734, 735, 761, 785, 788). Technical and editorial changes.

LIST OF EFFECTIVE PAGES

Sheet 1 of 6

New features, as well as changes, deletions, and additions to information in this manual are indicated by bars in the margins or by a dot near the page number if the entire page is affected. A bar by the page number indicates pagination rather than content has changed.

PAGE	REV	PAGE	REV
Cover	-	1-6	P
Blank	-	1-7	P
Title P	-	1-8	P
ii	AA	1-9	G
iii	AA	1-10	J
Blank	-	LD-Div	-
v	AA	Blank	-
vi	AA	1-11	M
vii	AA	1-12	M
viii	Z	1-13	M
ix	Z	Blank	-
x	Z	1-14.1	W
xi	Z	1-14.2	W
xii	Z	1-14.3	W
xiii	AA	Blank	-
xiv	Y	1-15	K
xv	AA	1-16	E
Blank	-	1-17	Z
xvii	AA	1-18	E
xviii	AA	1-19	T
xix	AA	1-20	T
xx	AA	1-20.1	Z
xxi	AA	1-20.2	Z
xxii	AA	1-20.3	Z
xxiii	AA	1-20.4	Z
Blank	-	1-20.5	Z
xxv	AA	Blank	-
xxvi	AA	1-20.7	Z
S-1 Div	-	1-20.8	Z
Blank	-	1-20.9	Z
1-1	H	1-20.10	Z
1-2	A	1-21	K
1-3	G	1-22	Z
1-4	A	1-23	Z
1-5	S	1-24	Z

LIST OF EFFECTIVE PAGES (Contd)

Sheet 2 of 6

PAGE	REV	PAGE	REV
1-25	Y	1-48.1	Z
1-26	A	1-48.2	Z
1-27	H	1-48.3	Z
Blank	-	Blank	-
1-28.1	Y	1-48.5	Z
1-28.2	Y	1-48.6	Z
1-28.3	Y	1-48.7	Z
Blank	-	Blank	-
1-28.5	AA	1-49	U
1-28.6	G	1-50	T
1-28.7	AA	1-51	T
Blank	-	1-52	T
1-29	Y	1-52.1	Z
1-30	Y	1-52.2	Z
1-31	Y	1-52.3	Z
1-32	Y	1-52.4	Z
1-33	Y	1-52.5	AA
Blank	-	1-52.6	AA
1-35	Z	1-52.7	Z
1-36	Y	1-52.8	AA
1-37	Y	1-52.9	AA
Blank	-	Blank	-
1-38.1	AA	1-52.11	Z
1-38.2	Z	1-52.12	Z
1-38.3	AA	1-52.13	Z
Blank	-	1-52.14	Z
1-39	Y	1-52.15	Z
1-40	C	1-52.16	Z
1-41	T	1-52.17	Z
1-42	A	1-52.18	Z
1-43	C	1-53	U
Blank	-	1-54	T
1-44.1	Y	1-55	T
1-44.2	Y	1-56	T
1-44.3	Y	1-56.1	T
1-44.4	Y	Blank	-
1-44.5	Y	1-56.3	Z
Blank	-	1-56.4	Z
1-45	Z	1-56.5	Z
1-46	T	1-56.6	Z
1-47	T	Blank	-
Blank	-	1-57	W

LIST OF EFFECTIVE PAGES (Contd)

Sheet 3 of 6

PAGE	REV	PAGE	REV
1-58	W	1-97	Z
1-59	T	1-98	Z
Blank	-	1-99	Z
1-61	W	1-100	Z
1-62	W	1-100.1	Z
1-63	A	1-100.2	Z
Blank	-	1-100.3	Z
1-65	W	1-100.4	Z
1-66	W	1-101	Z
1-67	A	1-102	Z
Blank	-	1-103	Z
1-69	Z	1-104	Z
1-70	A	1-105	Z
1-71	A	1-106	T
1-72	Z	1-107	A
1-73	K	1-108	T
1-74	A	1-109	Z
1-75	A	1-110	Z
1-76	A	1-111	AA
1-77	Z	1-112	U
1-78	W	1-113	AA
1-79	Z	1-114	AA
Blank	-	1-114.1	V
1-81	W	1-114.2	P
1-82	W	1-114.3	P
1-83	T	1-114.4	P
Blank	-	1-114.5	AA
1-85	Y	1-114.6	AA
1-86	Y	1-114.7	AA
1-87	A	1-114.8	AA
Blank	-	1-115	AA
1-89	Z	1-116	AA
1-90	A	1-117	Y
1-91	A	1-118	AA
1-92	Z	1-119	Y
1-93	K	Blank	-
1-94	A	1-121	AA
1-95	A	1-122	AA
1-96	A	1-123	U
1-96.1	Z	1-124	U
1-96.2	Z	1-125	U
1-96.3	Z	1-126	U
1-96.4	Z		

LIST OF EFFECTIVE PAGES (Contd)

Sheet 4 of 6

PAGE	REV	PAGE	REV
1-127	U	1-163	A
Blank	-	Blank	-
1-128.1	Z	1-165	K
1-128.2	Z	1-166	A
1-128.3	Z	1-167	A
1-128.4	Z	Blank	-
1-129	K	1-168.1	P
1-130	G	1-168.2	P
1-131	G	1-168.3	P
Blank	-	Blank	-
1-133	P	1-169	Y
1-134	P	1-170	Y
1-135	K	1-170.1	Z
1-136	A	1-170.2	Z
1-137	K	1-171	Y
1-138	A	1-172	A
1-139	P	1-173	C
1-140	P	Blank	-
1-141	K	1-174.1	AA
1-142	A	1-174.2	Y
1-143	K	1-174.3	AA
1-144	A	Blank	-
1-145	K	1-175	S
1-146	A	1-176	S
1-147	A	1-177	S
Blank	-	Blank	-
1-149	K	1-179	Y
1-150	A	1-180	L
1-151	A	1-180.1	Y
Blank	-	Blank	-
1-153	K	1-181	AA
1-154	A	1-182	AA
1-155	A	1-183	Y
Blank	-	1-184	S
1-156.1	P	1-184.1	V
1-156.2	P	Blank	-
1-156.3	P	1-184.3	Z
Blank	-	1-184.4	Z
1-157	K	1-185	K
1-158	A	1-186	K
1-159	A	1-186.1	Z
Blank	-	1-186.2	Z
1-161	K	1-187	Z
1-162	A		

LIST OF EFFECTIVE PAGES (Contd)

Sheet 5 of 6

PAGE	REV	PAGE	REV
1-188	J	2-15	C
1-188.1	Y	2-16	A
1-188.2	Y	2-17	A
1-188.3	Y	2-18	M
Blank	-	2-19	M
1-188.5	Z	2-20	C
1-188.6	Y	2-21	A
1-188.7	Y	2-22	A
Blank	-	2-23	A
1-189	Z	2-24	M
1-190	J	2-25	A
1-191	J	2-26	A
Blank	-	2-27	A
1-193	L	2-28	A
1-194	J	50 P-Div	-
1-194.1	J	Blank	-
Blank	-	2-29	W
1-195	S	2-30	A
1-196	C	2-31	A
1-196.1	Z	2-32	A
1-196.2	Z	2-33	A
1-196.3	Z	2-34	W
1-196.4	Z	2-35	A
S-2 Div	-	2-36	A
Blank	-	2-37	A
2-1	A	2-38	A
2-2	S	2-39	C
60 P-Div	-	2-40	A
Blank	-	2-41	A
2-3	W	2-42	A
2-4	A	2-43	A
2-5	A	2-44	C
2-6	A	2-45	A
2-7	M	2-46	A
2-8	A	2-47	A
2-9	W	2-48	A
2-10	A	IS-Div	-
2-11	A	Blank	-
2-12	A	2-49	W
2-13	A	2-50	A
2-14	A	2-51	A

LIST OF EFFECTIVE PAGES (Contd)

Sheet 6 of 6

PAGE	REV	PAGE	REV
2-52	A	2-73	Z
2-53	A	2-74	W
2-54	W	2-75	P
2-55	A	2-76	P
2-56	A	2-77	P
2-57	A	2-78	P
2-58	A	2-79	P
2-59	C	2-80	P
2-60	A	2-81	P
2-61	A	2-82	P
2-62	A	2-83	P
2-63	A	2-84	Z
2-64	C	2-85	Z
2-65	A	2-86	P
2-66	A	2-87	P
2-67	A	2-88	P
2-68	A	2-89	P
S&IOABC-Div	-	Blank	-
Blank	-	Cmt Sht	-
2-69	Z	Rtn Env	-
2-70	P	Blank	-
2-71	P	Cover	-
2-72	P		

PREFACE

This manual contains maintenance information applicable to the BK5XX Storage Module Drives (SMDs) listed in the configuration charts (found following the table of content). The configuration charts define each of the equipments covered by this manual in terms of cabinet mounting styles, cabinet colors, and the various electronic features provided. Since this manual covers all of the various configurations available on the SMD, it is necessary to understand exactly which configuration you have in order to know which procedures in this manual are applicable to your drive.

This manual provides the logic and wiring information relating to the SMDs. The manual assumes that the reader is already trained in the use of normal mechanical and electric repair equipment. In addition, the manual assumes that the reader has a working knowledge of the use and interpretation of logic.

lnformation in this manual is divided into two sections:

Section 1 - Diagrams

Section 2 - Wire Lists

Other manuals, also applicable to the SMDs covered in this manual, are as follows, and are available from Control Data Literature Distribution Services, 308 North Dale Street, St. Paul MN 55103.

Publication No.	Title
83322150*	Hardware Maintenance Manual Volume 1 - Installation and Checkout, Maintenance, Parts Data.
83322200*	Hardware Reference Manual - General Description, Operation, Theory of Operation, Discrete Component Circuits.

Publication No.	Title
83322440	CDC Microcircuits Volume I, Functional Descriptions of Integrated Circuits.
83324440	CDC Microcircuits Volume II, Functional Descriptions of Integrated Circuits.
83323770	A Guide for the Disk Drive Operator

*Note: The following manuals are unique to the BK5A9J:

83322960	Hardware Maintenance Manual Volume I - Installation and Checkout, Maintenance, Parts Data.
83322980	Hardware Reference Manual - General Description, Operation, Theory of Operation, Discrete Components Circuits.

CONTENTS

Important Safety Information and Precautions	xv
Configuration Chart	xvii
Abbreviations	xxv
1. DIAGRAMS	
Introduction	1-1
Diagram Conventions	1-1
Symbology	1-1
Qualifying Symbol	1-1
Element Identifier	1-2
Physical Location Code	1-2
Abbreviations	1-2
Logic Levels	1-2
Signal Names	1-2
Intersheet References	1-2
Diagram Cover Sheets	1-4
Physical Description	1-5
Logic Diagram Sets	1-11
2. WIRE LISTS	
Introduction	1-2
Reading Wire Lists	2-1
Signal Name or Number Identification	2-1
Origin/Destination	2-1
Z Level	2-2
Notes	2-2
60 Pin I/O Wire List	2-3
50 Pin I/O Wire List	2-29
Index and Sector in B Cable Wire List	2-49

FIGURES

1-1	Electronic Component Assembly	1-1
1-2	Intersheet Referencing	1-3
1-3	Physical Location Codes	1-8
1-4	Backpanel Layout	1-9
1-5	Chassis Map	1-10
2-1	Example of Logic Wirewrap List	2-1
2-2	Z Levels	2-2

TABLES

1-1	Logic Voltage Levels	1-2
1-2	Physical Location Codes	1-6

IMPORTANT SAFETY INFORMATION AND PRECAUTIONS

Proper safety and repair is important to the safe, reliable operation of this unit. Service should be done by qualified personnel only. This maintenance manual describes procedures recommended by the manufacturer as effective methods of servicing the unit. Some of these procedures require the use of specially designed tools. For proper maintenance and safety, these specially designed tools should be used as recommended.

The procedures in this maintenance manual and labels on the unit contain warnings and cautions which must be carefully read and observed in order to minimize or eliminate the risk of personal injury. The warnings point out conditions or practices that are potentially hazardous to maintenance personnel. The cautions point out practices which, if disregarded, could damage the unit and make it unsafe for use.

For the safety of maintenance and operating personnel, the following precautions must be observed:

- Perform all maintenance in accordance with the procedures given in this manual.
- Read and observe all cautions and warnings provided in the procedures and labeled on the unit.
- Use the special tools called out in the maintenance procedure.
- Observe sound safety practices when performing maintenance.
- Use caution when troubleshooting a unit that has voltages present. Remove power from unit before servicing or replacing components.
- Wear safety glasses when servicing units.
- Wear safety shoes when removing or replacing heavy components.

It is also important to understand that these warnings and cautions are not exhaustive. The manufacturer could not possibly know, evaluate and advise maintenance personnel of all conceivable ways in which maintenance might be performed or the possible risk of each maintenance technique. Consequently, the manufacturer has not completed any such broad evaluation. Thus, any persons who use any non-approved maintenance procedure or tool must first satisfy themselves that neither their safety nor the unit performance will be jeopardized by the maintenance techniques they select.

CONFIGURATION CHART

EQUIP	TLA	POWER V	POWER HZ	DATA CAP (MB)	CH	A CABLE CONFIG	CLR[4] CODE	CAB MTG STYLE
BK5A1A	47173002	120	60	80	S	60-pin[1]	A	30-in rk
BK5A1B	47173003	220/240	50	80	S	60-pin[1]	A	30-in rk
BK5A1D	47173085	220/240	50	80	S	60-pin	AH	30-in rk
BK5A1E	47292521	120	60	80	S	S&IOBC	AX	30-in rk
BK5A1F	47292522	220/240	50	80	S	S&IOBC	AX	30-in rk
BK5A1G	47292542	120	60	80	S	60-pin[1]	BG	uni cab
BK5A1H	47292543	220	50	80	S	60-pin[1]	BG	uni cab
BK5A1J	47292597	120	60	80	S	S&IOBC	CE	30-in rk
BK5A1K	47292551	240	50	80	S	60-pin	BB	30-in rk
BK5A1L	47292598	220	50	80	S	S&IOBC	CE	30-in rk
BK5A1M	47292573	220	50	80	S	60-pin[1]	A	30-in rk
BK5A1N	82398035	220	50	80	S	S&IOABC	CY	30-in rk
BK5A1P	82398041	220	50	80	S	S&IOABC	DG	30-in rk
BK5A2A	47173004	120	60	80	D	60-pin[1]	A	30-in rk
BK5A2B	47173005	220/240	50	80	D	60-pin[1]	A	30-in rk
BK5A3A	47173006	120	60	80	S	60-pin[1]	B	30-in rk
BK5A3B	47173007	220/240	50	80	S	60-pin[1]	B	30-in rk
BK5A3C	47292519	120	60	80	S	60-pin	AR	36-in rk
BK5A3D	47292520	220/240	50	80	S	60-pin	AR	36-in rk
BK5A3E	82398023	120	60	80	S	S&IOABC	CT	36-in rk
BK5A3F	48292544	220	50	80	S	60-pin	B	36-in rk
BK5A3G	82398026	220	50	80	S	S&IOABC	CT	36-in rk
BK5A3H	47292561	220	50	80	S	60-pin[1]	B	36-in rk
BK5A3J	82398042	220	50	80	S	S&IOABC	DH	36-in rk
BK5A3K	47292579	220	50	80	S	60-pin	BP	36-in rk
BK5A3M	47292593	220	50	80	S	S&IOABC	CA	36-in rk
BK5A3N	82398045	120	60	80	S	S&IOABC	DL	36-in rk
BK5A3P	82398046	220	50	80	S	S&IOABC	DL	36-in rk
BK5A4A	47173008	120	60	80	D	60-pin[1]	B	36-in rk
BK5A4B	47173009	220/240	50	80	D	60-pin[1]	B	36-in rk

Table Continued on Next Page

CONFIGURATION CHART (Contd)

EQUIP	TLA	POWER V	POWER HZ	DATA CAP (MB)	CH	A CABLE CONFIG	CLR[4] CODE	CAB MTG STYLE
BK5A5A	47173016	120	60	80	S	60-pin[1]	C	ped cab
BK5A5B	47173017	220/240	50	80	S	60-pin[1]	C	ped cab
BK5A5C	47173048	120	60	80	S	60-pin	J	ped cab
BK5A5D	47173049	220	50	80	S	60-pin	J	ped cab
BK5A5E	47173068	120	60	80	S	60-pin	AE	ped cab
BK5A5F	47173074	120	60	80	S	60-pin	V	ped cab
BK5A5G	47173075	220/240	50	80	S	60-pin	V	ped cab
BK5A5H	47173076	120	60	80	S	S&IOBC	W	ped cab
BK5A5J	47173088	120	60	80	S	60-pin	AJ	ped cab
BK5A5K	47173089	220/240	50	80	S	60-pin	AJ	ped cab
BK5A5L	47173090	120	60	80	S	75-pin	DA[3]	ped cab
BK5A5M	47173091	220/240	50	80	S	75-pin	DA[3]	ped cab
BK5A5N	47292504	120	60	80	S	S&IOBC	AK	ped cab
BK5A5P	47292505	220/240	50	80	S	S&IOBC	AK	ped cab
BK5A5R	47292536	120	60	80	S	60-pin	AW	ped cab
BK5A5S	47292537	220/240	50	80	S	60-pin	AW	ped cab
BK5A5T	47292538	120	60	80	S	60-pin	DA[3]	ped cab
BK5A5U	47292539	220	50	80	S	60-pin	DA[3]	ped cab
BK5A5V	47292540	120	60	80	S	60-pin	AY	ped cab
BK5A5W	47292541	220	50	80	S	60-pin	AY	ped cab
BK5A5Y	47292545	120	60	80	S	60-pin	AZ	ped cab
BK5A5Z	47292552	220	50	80	S	60-pin	BC	ped cab
BK5A6A	47173018	120	60	80	D	60-pin[1]	C	ped cab
BK5A6B	47173019	220/240	50	80	D	60-pin[1]	C	ped cab
BK5A6E	47292547	120	60	80	D	S&IOBC	BA	ped cab
BK5A6F	47292548	220	50	80	D	S&IOBC	BA	ped cab

Table Continued on Next Page

CONFIGURATION CHART (Contd)

EQUIP	TLA	POWER V	POWER HZ	DATA CAP (MB)	CH	A CABLE CONFIG	CLR[4] CODE	CAB MTG STYLE
BK5A6G	47292555	120	60	80	D	S&IOABC	CV[3]	ped cab
BK5A6H	47292556	220	50	80	D	S&IOABC	CV[3]	ped cab
BK5A7A	47173020	120	60	80	S	60-pin[1]	D	acst drw
BK5A7B	47173021	220/240	50	80	S	60-pin[1]	E	acst drw
BK5A7G	47173080	120	60	80	S	60-pin	AC	acst drw
BK5A7H	47173078	220/240	50	80	S	60-pin	AA	acst drw
BK5A7J	47292513	120	60	80	S	60-pin	BS[3]	acst drw
BK5A7K	47292514	220/240	50	80	S	60-pin	BS[3]	acst drw
BK5A7L	47292525	120	60	80	S	60-pin	AU	acst drw
BK5A7M	47292526	220/240	50	80	S	60-pin	AV	acst drw
BK5A7N	47292529	120	60	80	S	60-pin	BS[3]	acst drw
BK5A7P	47292530	220/240	50	80	S	60-pin	BS[3]	acst drw
BK5A7R	47292557	120	60	80	S	S&IOBC	BD	acst drw
BK5A7S	47292558	220	50	80	S	S&IOBC	BD	acst drw
BK5A7T	47292594	220	50	80	S	S&IOABC	CB	acst drw
BK5A7U	47292562	220	50	80	S	60-pin[1]	E	acst drw
BK5A7V	47292565	120	60	80	S	S&IOABC	BK	acst drw
BK5A7W	47292566	240	50	80	S	S&IOABC	BL	acst drw
BK5A7Y	47292574	120	60	80	S	60-pin	BK[3]	acst drw
BK5A7Z	47292575	220	50	80	S	60-pin	BL[3]	acst drw
BK5A8A	47173022	120	60	80	D	60-pin[1]	D	acst drw
BK5A8B	47173023	220/240	50	80	D	60-pin[1]	E	acst drw
BK5A8H	82398005	220	50	80	D	S&IOABC	CJ[3]	acst drw
BK5A9A	47173024	120	60	80	S	60-pin[1]	F	acst cab
BK5A9B	47173025	220/240	50	80	S	60-pin[1]	G	acst cab

Table Continued on Next Page

CONFIGURATION CHART (Contd)

EQUIP	TLA	POWER V	POWER HZ	DATA CAP (MB)	CH	A CABLE CONFIG	CLR[4] CODE	CAB MTG STYLE
BK5A9G	47173066	120	60	80	S	60-pin	X	acst cab
BK5A9H	47173067	220/240	50	80	S	60-pin	Y	acst cab
BK5A9J	47173069	220/240	50	80	S	60-pin	[3]	acst cab
BK5A9K	47173077	220/240	50	80	S	60-pin	AB	acst cab
BK5A9L	47173081	120	60	80	S	60-pin	AD	acst cab
BK5A9M	47292516	220/240	50	80	S	60-pin	BU[3]	acst cab
BK5A9N	47292510	120	60	80	S	60-pin	AL	acst cab
BK5A9P	47292515	120	60	80	S	60-pin	BT[3]	acst cab
BK5A9R	47292517	120	60	80	S	60-pin	AN	acst cab
BK5A9S	47292518	220/240	50	80	S	60-pin	AP	acst cab
BK5A9T	47292523	120	60	80	S	60-pin	AS	acst cab
BK5A9U	47292524	220/240	50	80	S	60-pin	AT	acst cab
BK5A9V	47292527	120	60	80	A	60-pin	BT[3]	acst cab
BK5A9W	47292528	220/240	50	80	S	60-pin	BU[3]	acst cab
BK5A9Z	47292564	220	50	80	S	60-pin[1]	G	acst cab
BK5B1A	47173026	120	60	80	D	60-pin[1]	F	acst cab
BK5B1B	47173027	220/240	50	80	D	60-pin[1]	G	acst cab
BK5B1G	82398027	220	50	80	D	S&IOABC	CW	acst cab
BK5B1H	82398004	220	50	80	D	S&IOBC	CK[3]	acst cab
BK5B5J	47173082	120	60	80	S	60-pin	AF	acst cab
BK5B5K	47173083	220/240	50	80	S	60-pin	AG	acst cab
BK5B5L	47292549	120	60	80	S	S&IOBC	BA	ped cab
BK5B5M	47292550	220	50	80	S	S&IOBC	BA	ped cab
BK5B5N	47292553	120	60	80	S	S&IOABC	CV[3]	ped cab
BK5B5P	47292554	220	50	80	S	S&IOABC	CV[3]	ped cab
BK5B5R	82398034	220	50	80	S	S&IOABC	CZ	ped cab
BK5B5S	47292563	220	50	80	S	60-pin[1]	C	ped cab

Table Continued on Next Page

CONFIGURATION CHART (Contd)

EQUIP	TLA	POWER V	POWER HZ	DATA CAP (MB)	CH	A CABLE CONFIG	CLR[4] CODE	CAB MTG STYLE
BK5B5T	47292572	100	60	80	S	S&IOBC	AK	ped cab
BK5B5U	47292571	100	50	80	S	S&IOBC	AK	ped cab
BK5B5W	47292581	220	50	80	S	60-pin	C	ped cab
BK5B5Y	47292591	120	60	80	S	60-pin[1]	CD	ped cab
BK5B5Z	47292592	220/240	50	80	S	60-pin[1]	CD	ped cab
BK5B6A	47173036	120	60	80	D	S&IOBC	H	ped cab
BK5B6B	47173037	220/240	50	80	D	S&IOBC	H	ped cab
BK5B6C	47173038	120	60	80	S	S&IOBC	H	ped cab
BK5B6D	47173039	220/240	50	80	S	S&IOBC	H	ped cab
BK5B7A	47173040	120	60	80	D	50-pin	C	ped cab
BK5B7B	47173041	220/240	50	80	D	50-pin	C	ped cab
BK5B7C	47173042	120	60	80	S	50-pin	C	ped cab
BK5B7D	47173043	220/240	50	80	S	50-pin	C	ped cab
BK5B8C	47173046	120	60	80	S	S&IOBC	K	ped cab
BK5B8D	47173047	220/240	50	80	S	S&IOBC	K	ped cab
BK5B9A	47173010	120	60	80	S	60-pin	L	ped cab
BK5B9B	47173011	220/240	50	80	S	60-pin	L	ped cab
BK5B9C	47173012	120	60	80	S	60-pin	M	acst cab
BK5B9D	47173013	220/240	50	80	S	60-pin	M	acst cab
BK5B9E	47173014	120	60	80	S	60-pin	N	acst drw
BK5B9F	47173015	220/240	50	80	S	60-pin	R	acst drw
BK5B9G	82398008	100	60	80	S	60-pin	C	ped cab
BK5B9H	82398009	100	50	80	S	60-pin	C	ped cab
BK5B9J	47173070	120	60	80	S	60-pin	S	acst cab
BK5B9K	47173071	220/240	50	80	S	60-pin	Z	acst cab
BK5B9L	47173072	120	60	80	S	60-pin	T	acst drw
BK5B9M	47173073	220/240	50	80	S	60-pin	U	acst drw

Table Continued on Next Page

CONFIGURATION CHART (Contd)

EQUIP	TLA	POWER V	POWER HZ	DATA CAP (MB)	CH	A CABLE CONFIG	CLR[4] CODE	CAB MTG STYLE
BK5B9N	82398006	120	60	80	S	60-pin	CG	ped cab
BK5B9P	82398036	120	60	80	S	S&IOAC	DF	ped cab
BK5B9R	82398019	120	60	80	S	S&IOABC	CL	ped cab
BK5B9S	82398020	220	50	80	S	S&IOABC	CL	ped cab
BK5B9T	82398017	120	60	80	S	S&IOABC	CM	ped cab
BK5B9U	82398018	220	50	80	S	S&IOABC	CM	ped cab
BK5B9V	82398021	120	60	80	S	S&IOABC	CS	ped cab
BK5B9W	82398022	220	50	80	S	S&IOABC	CS	ped cab
BK5B9Y	82398024	120	60	80	S	S&IOABC	CU	ped cab
BK5B9Z	82398025	220	50	80	S	S&IOABC	CU	ped cab
BK5C1E	47173092	120	60	80	S	60-pin	-	basic
BK5C1F	47173093	220/240	50	80	S	60-pin	-	basic
BK5C1G	47292535	120	60	80	S	60-pin	-	basic
BK5C1H	47292599	220	50	80	S	60-pin	CF	Nude
BK5C1J	47292585	100	50	80	S	60-pin	-	basic
BK5C1K	47292586	100	60	80	S	60-pin	-	basic
BK5C2A	47173050	120	60	80	S	60-pin	P	nude
BK5C2B	47173051	220/240	50	80	S	60-pin	P	nude
BK5C3A	47292511	120	60	80	S	60-pin[1]	AM	desk
BK5C3B	47292512	220/240	50	80	S	60-pin[1]	AM	desk
BK5C4A	47292559	120	60	80	S	S&IOBC	BE	acst cab
BK5C4B	47292560	220	50	80	S	S&IOBC	BF	acst cab
BK5C4C	47292567	120	60	80	S	S&IOABC	BH	acst cab
BK5C4D	47292568	220	50	80	S	S&IOABC	BJ	acst cab
BK5C4E	47292569	120	60	80	S	60-pin	BM	acst cab
BK5C4F	47292570	220	50	80	S	60-pin	BN	acst cab
BK5C4G	47292576	120	60	80	S	60-pin	BH[3]	acst cab
BK5C4H	47292577	220	50	80	S	60-pin	BJ[3]	acst cab
BK5C4K	47292578	220	50	80	S	60-pin	BR	acst cab
BK5C4M	47292580	220	50	80	S	60-pin	BV	acst cab
BK5C4N	82398037	220	50	80	S	S&IOABC	DC	acst cab
BK5C4P	47292582	220	50	80	S	60-pin	BW	acst cab
BK5C4R	47292583	120	60	80	S	S&IOBC	BX	acst cab
BK5C4S	47292584	220	50	80	S	S&IOABC	BY	acst cab

Table Continued on Next Page

CONFIGURATION CHART (Contd)

EQUIP	TLA	POWER V	POWER HZ	DATA CAP (MB)	CH	A CABLE CONFIG	CLR[4] CODE	CAB MTG STYLE
BK5C4T	82398044	220	50	80	S	S&IOABC	DJ	acst cab
BK5C4U	82398002	220	50	80	S	S&IOABC	CK[3]	acst cab
BK5C4W	82398007	120	60	80	S	60-pin	CH	acst cab
BK5C4Y	82398010	100	60	80	S	60-pin	F	acst cab
BK5C4Z	82398011	100	50	80	S	60-pin	G	acst cab
BK5C5A	47292595	120	60	80	S	60-pin[1]	CC	acst drw
BK5C5B	47292596	220	50	80	S	60-pin	CC	acst drw
BK5C5D	82398003	220	50	80	S	S&IOABC	CJ[3]	acst drw
BK5C5F	82398043	220	50	80	S	S&IOABC	DK	acst drw
BK5C6A	82398012	120	60	80	S	S&IOABC	CN	acst cab
BK5C6B	82398013	220	50	80	S	S&IOABC	CP	acst cab
BK5C6C	82398016	120	60	80	S	S&IOABC	CR	acst cab
[5]BK5C6D	81528302	220	50	80	S	S&IOABC	DN	acst cab
BK5C6E	82398038	220	50	80	S	S&IOABC	DD	acst drw
BK5C7A	82398039	120	60	80	S	S&IOAC	DE	ped cab
BK5C7B	82398040	220	50	80	S	S&IOAC	DB	ped cab
BK5C7C	82398047	120	60	80	S	S&IOAC	DM	acst cab
BK5C7D	82398048	220	50	80	S	S&IOAC	DM	acst cab

[1] Units built after S/C 34 have Index and Sector on A and B Cables.

[2] Units built after S/C 24 have Pack Interlocks.

[3] Units have Special Supplement.

[4] SEE TABLE 3-1 COLOR CODE CHART in HM, Vol 1

[5] VDE Unit

ABBREVIATIONS

ABR	Absolute Reserve
ABV	Above
ADDR	Address
ADRS	Address
AGC	Automatic Gain Control
AM	Address Mark
AMPL	Amplifier
BLK	Black
BLW	Below
CAR	Cylinder Address Register
CH	Channel
CHAN	Channel
CNTLGL	Centrifugal
CNTR	Counter
COMP	Compensation
CONFIG	Configuration
CONT	Continued
CR REF	Cross Reference
CYL	Cylinder
D/A	Digital To Analog
DCDR	Decoder
DIFF	Difference
DLY	Delay
DRVR	Driver
DSBL	Disable
ECL	Emitter Coupled Logic
ECO	Engineering Change Order
EMER	Emergency
EN	Enable
EOT	End Of Travel
EQUIP	Equipment
EQUIV	Equivalent
FCO	Field Change Order
FF	Flip Flop
FIG	Figure
FLT	Fault
FREQ	Frequency
FTU	Field Test Unit
FWD	Forward
GND	Ground
HD	Head
I/O	Input-Output
INTLK	Interlock
LD	Load
MAINT	Maintenance
MAX	Maximum
MB	Megabyte
MFM	Modified Frequency Modulation
MK	Mark
MUTL	Multiple
NC	No Connection
NFR	Not Field Replaceable
NEG	Negative
NO	Number
NOM	Nominal
NORM	Normal
NRM	Normal
NRZ	Nonreturn To Zero
PC PT	Piece Part
PLO	Phase Lock Oscillator
PN	Part Number
POS	Positive
PWR	Power
RCVRS	Receivers
RD	Read
RDY	Ready
REC	Receiver
REF	Reference
REG	Register

ABBREVIATIONS (Contd)

REV	Reverse
RGTR	Register
RTM	Reserve Timer
RTZ	Return To Zero
S&IOABC	Sector and Index On A & B Cable
S&IOBC	Sector and Index On B Cable
S/C	Series Code
SEC	Second
SEL	Select
SEQ	Sequence
SER	Servo
SH	Sheet
SOL	Solenoid
SR	Servo
SW	Switch
T	Track
TBS	To Be Supplied
TLA	Top Level Assembly
TP	Test Point
TRK	Track
TTL	Transistor Transistor Logic
UNREG	Unregulated
VCO	Voltage Controlled Oscillataor
W+R	Write Or Read
W·R	Write and Read
W/	With
W/O	Without
WRT	Write
WT	White
XDUCER	Transducer
XMTR	Transmitter

SECTION 1

DIAGRAMS

INTRODUCTION

Section 1 is divided into three discussions: diagram conventions, physical descriptions, and diagrams. The discussion on diagram conventions describes the elements included in the logic, and how to use the logic. The discussion on physical description identifies the functional elements on the drive, and references them to the appropriate diagrams. The logic diagrams show how the drive functions.

DIAGRAM CONVENTIONS

The conventions used in the logic diagrams are:

- Symbology
- Abbreviations
- Logic Levels
- Signal Names
- Intersheet References
- Diagram Cover Sheets

An explanation of each of the above is included in the following paragraphs.

SYMBOLOGY

The diagrams contain standard schematic symbology and logic symbology. Logic symbology, as identified in this manual, refers to integrated circuits and discrete circuits. Typically, all logic symbols contain two or three lines of information (see figure 1-1). All logic symbols have a qualifying symbol and an element identifier. Only integrated circuits have a physical location symbol.

QUALIFYING SYMBOL

The first line of any logic symbol will contain a qualifying symbol. The qualifying

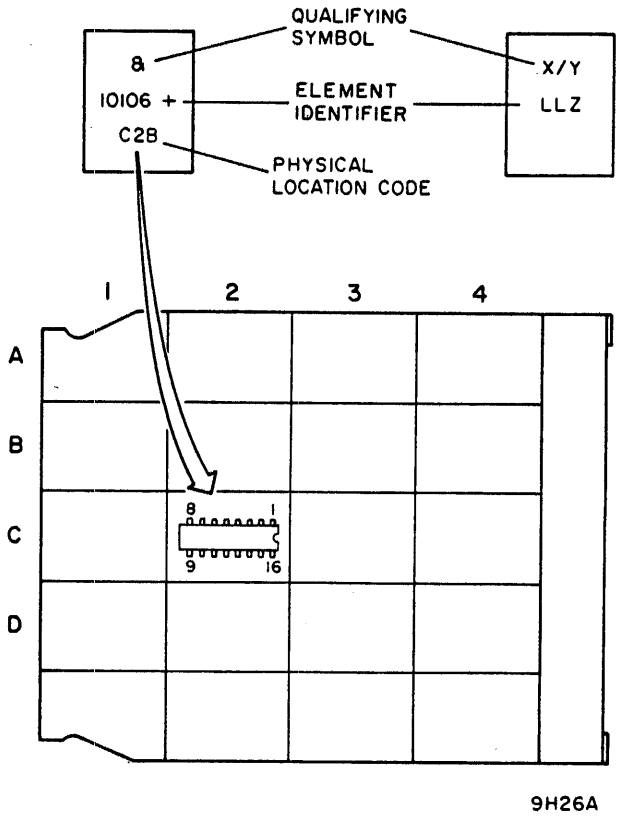

Figure 1-1. Electronic Component Assembly Layout

symbol determines the function of the circuit. Refer to Key To Logic in the reference manual for a detailed list, and explanation of the qualifying symbols used in the diagrams.

Element Identifier

The second line of any logic symbol contains the element identifier. The element Identifier defines the type of circuit involved. Integrated circuits are identified by a series of numbers (example: 175). This series of numbers may have a letter or series of letters following (example: 175H). A detailed description of all integrated circuits used can be found in the microcircuits manual. Discrete circuits are identified by three letters in a series (example: LZJ). Refer to the reference manual for a detailed explanation of particular discrete circuits.

Physical Location Code

The third line, which pertains only to integrated circuits, contains the physical location code. The physical location code is in the form of either a two digit code or a three digit code. The first two digits indicate the location of the chip in relation to its position on the card. The location of the chip can be found as follows: with the component side of the card up and the card connector to the right, form an imaginary grid on the card. Divide the card into five equal rows (using horizontal lines), and four equal columns (using vertical lines). Label the five rows A through E on the left hand side of the card, and number the columns 1 through 4 on the top of the card. To find a chip location, intersect the rows and the columns. For example, to find A1 on a card, locate the imaginary row on the left side of the card, and go across to the right on the card until row A intersects with column 1. Chip A1 is at the point of intersection. If one additional character exists (example: A1B), that character represents the section of the chip used. The B on the end of the example given represents section B of the chip at location A1. To find out where section B is on the chip, refer to the chip description in the microcircuits manual.

ABBREVIATIONS

Abbreviations are used in the logic diagrams when it is impractical or impossible to use complete nomenclature on logic diagrams. Standard abbreviations from ANSI Y1.1 were used when possible. Refer to the list of abbreviations included in the front matter for definitions of all abbreviations used in the manual.

LOGIC LEVELS

Two types of logic are used in the drives covered by this manual: TTL logic, and ECL logic. Logic voltage levels for both types are given in the table 1-1. Different circuit configurations, temperatures, and so on may result in legitimate readings that fall outside of the typical range. Such readings, however, should be suspect only in the event of trouble.

SIGNAL NAMES

All input-output signals are labeled to reflect their particular function. If an output signal has no connection, and therefore no function, it will be labeled "NC" to indicate no connection. The polarity of a signal is identified by a plus or minus sign before the signal name. A plus sign before a signal name indicates that the signal is active when the logic level is high, or in a logical 1's state. A minus sign before a signal name indicates that the signal is active when the logic level is low, or in a logical 0's state. Refer to the discussion on logic levels.

INTERSHEET REFERENCES

There are 34 sets of logic in the diagrams. The key to understanding how each set relates to another is in identifying three basic components. Each set contains cross-reference numbers, physical location codes, and pin numbers (see figure 1-2). The cross-reference number is a three digit, two part number. The first part (first two digits) indicates which set is being referenced. The second part (third digit) indicates which page of the set is being referenced. For example, in reference number 131, the first two digits indicate that set 13 is

TABLE 1-1. LOGIC VOLTAGE LEVELS

Logical State	Nominal Voltage	Typical Range
TTL "1"	+3 V	+2.5 V to +4.0 V *
TTL "0"	0 V	0 V to +0.9 V
ECL "1"	-0.9 V	-0.61 V to -0.97 V
ECL "0"	-1.8 V	-1.52 V to -2.38 V

* Measuring a TTL open collector voltage may result in a reading that is close to the actual power supply voltage.

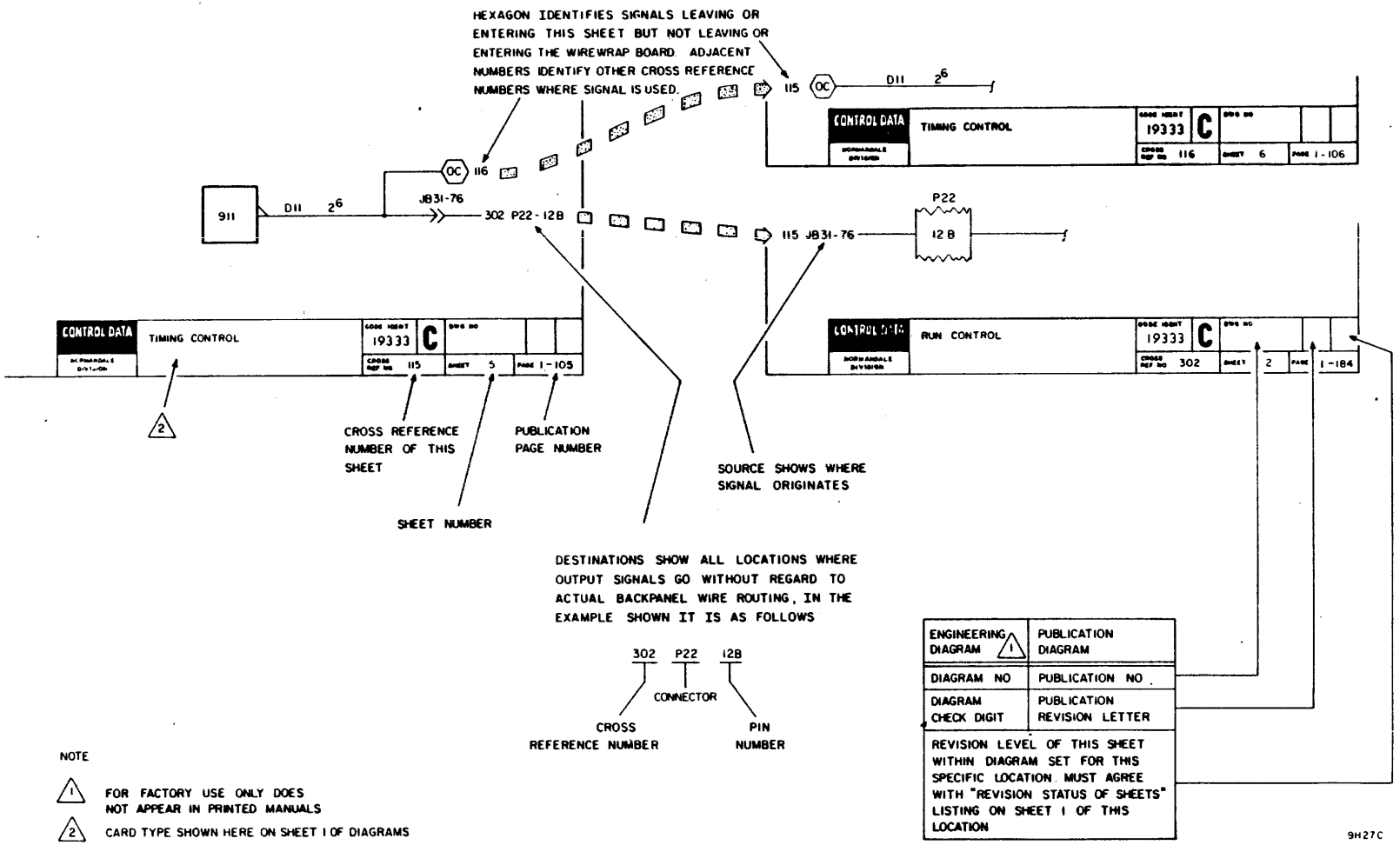

Figure 1-2. Intersheet Referencing

being referenced. The third digit indicates that page 1 of set 13 is being referenced. Since the logic is used with more than one drive configuration (example: 50 pin or 60 pin I/O), it is possible to have identical cross-reference numbers on two or more logic sets. In cases where a reference number is used on more than one logic set, each sheet of each applicable logic set will be labeled with the appropriate drive configuration. Cross-reference numbers are also used within the logic, so that logic can be traced from one logic set to another. A cross-reference number on the output of a logic signal indicates that the logical sequence continues in the logic set identified by the cross-reference number. Typically, other identifying information, such as the physical location code, or the pin number will follow the cross-reference number on the logic. A cross-reference number on the input of a signal indicates the origin of the signal. Where a logic signal does not leave the logic, but is continued on some other sheet of the same set, the cross-reference number of the destination sheet will be shown. In such cases, the cross-reference number will be preceded by a hexagon. The hexagon will be identified with a letter to indicate a specific location on the destination sheet. Where a logical sequence cannot be shown in series and it does not leave the logic sheet, "line of sight" arrows are used to indicate the origin and destination of the sequence. The end of a logical sequence will be shown with a line of sight arrow pointing away from a small circle identified with a letter. A second circle, identified with the same letter, will have a line of sight arrow pointing in the same direction as the first. The second arrow indicates where the logical sequence continues.

The physical location code is an alpha-numerical code, such as A2A05, that identifies the relationship between the logic sets and their location on the drive. All physical location codes are represented in the logic. However, several miscellaneous codes that do not warrant their own logic set are shown in a related logic set. For example, A3L2 (shown on cross-reference sheet 072) is not shown in the A3 logic set. A3L2 is shown with A2 logic, since A2 is more closely related. Refer to the table and figure on physical location codes to locate particular physical location codes.

The pin numbers used in the logic are for identifying logic signals at their respective input-output locations. Pin numbers are identified by a three character number, such as 14A. The tagging information on all input-output signals should reflect a reference number, a physical location code, and a pin number, respectively.

Logic set 34X contains the cabling information for all inter-chassis logic signals on logic sets 01X through 33X. Inter-chassis connections are designated by a small square identified with a location code, such as A3. An inter-chassis designator used at the output of a logic signal indicates that the signal leaves the assembly shown, and continues on the assembly indicated by the indicator. An inter-chassis designator at the input of the logic signal indicates that the signal originated on the assembly shown by the designator. When it becomes necessary to view the cabling in its entirety, refer to logic set 34X. Logic set 34X shows only the various cables and connectors as used in the drive. All logic chassis backpanel wiring is shown in the wirelist.

DIAGRAM COVER SHEETS

The diagram cover sheet is the first sheet of a logic set. Power and ground connections, revision status, card type information, and a list of unused circuit elements are found on the cover sheet. Power enters the drive from the Drive Power Plug (P1 on reference sheet 302), is rectified (refer to reference sheets 31X, 32X, and 33X), and then distributed to the backpanel fastons. The backpanel then distributes power to the logic cards. The cover sheets show which pins receive that power. All power connections show the point of origin for the power source except those that are most common. The most common power connections are:

- -20V faston, which feeds pin 2B on cards A01-A09
- +20V faston, which feeds pin 33B on cards A01-A09
- -5V faston, which feeds pin 1B on all cards
- +5V faston, which feeds pin 34B on all cards
- GND faston, which feeds pins 1A and 34A on all cards

The revision of each logic sheet within the logic set is shown in the upper left-hand corner of the cover sheet. The upper right-hand corner of the sheet contains a record of the changes made to the logic set. The latest revision letter shown in the revision record should always match the letter of the cover sheet.

The cover sheet also shows the card type which appears in the title block below the card name. Refer to figure 1-2 for an explanation of all pertinent information shown in the title block.

PHYSICAL DESCRIPTION

The physical arrangement of the drive is described on figures 1-3 through 1-5, and table 1-2. Figure 1-3 separates the drive into three sections. Each section and its assemblies and components have been assigned a physical location code. All physical location codes shown on figure 1-3 are listed in table 1-2. Table 1-2 identifies the physical location code by title, and refers to the logic set in which the code is shown. The drive backpanel is shown on figure 1-4. The view shown is the wired side of the backpanel. The relative position of the backpanel, and all other card assemblies in the drive, is shown on the chassis (see figure 1-5).

TABLE 1-2. PHYSICAL LOCATION CODES

PHYSICAL LOCATION CODE	TITLE	CROSS REFERENCE NUMBERS
A1	Base Assembly (AC Power System)	302
A1A01	Plus and Minus 42V Supply and Emergency Retract	31X
A1A02	Plus and Minus, Plus and Minus 12V Supplies	32X
A1A03	Plus and Minus 5V Supply	33X
A1BM1	Blower Motor	302
A1C1	Servo Capacitor (+)	312
A1C2	Servo Capacitor (-)	312
A1C5	Blower Motor Start Capacitor	302
A1C8	Transformer Tuning Capacitor	302
A1CB1	AC Power Circuit Breaker	302
A1CB2	Power Supply Circuit Breaker	302
A1FL1	Line Filter	302
A1K1	Run Triac	302
A1K2	Emergency Retract Relay	312
A1M1	Elapsed Time Meter	302
A1S4	Deck Interlock Switch	302
A1T1	AC Power Transformer	302
A1TB1	Terminal Board	302
A1TB2	Terminal Board (50 Hz S/C 31 & abv) (60 Hz S/C 34 & abv)	302
A1J1A	Power Supply Connector	31X-33X
A1J1B	Power Supply Connector	31X-33X
A1J100	Power Supply Connector	31X-33X
A1J400	Fan Connector (Acoustic Top Mount Only)	302
A1P1	AC Power Connector	302
A2	Logic Chassis	--

Table continued on next page

TABLE 1-2. PHYSICAL LOCATION CODES (Contd)

PHYSICAL LOCATION CODE	TITLE	CROSS REFERENCE NUMBERS
A2A01	Write Clock (806 KHZ)	01X
A2A02	FTU/Head Alignment Card Slot	02X
A2A03	Fine Servo Decoder	03X
A2A04	Fault Card	04X
A2A05	Data Latch	05X
A2A06	Read PLO	06X
A2A07	D/A Function Generator	07X
A2A08	Access Control NO 2	08X
A2A09	Switching Mode Enable	09X
A2A10	Interlocks and Speed Controls	10X
A2B01	Channel I Transmitters and Receivers Head Address Register	11X
A2B02	Channel I Receivers	12X
A2B03	Channel II Transmitters and Receivers	13X
A2B04	Channel II Receivers	14X
A2B05	Dual Channel Steering	15X
A2B06	Difference Generator and Controls	16X
A2B07	NRZ to Compensated MFM	17X
A2B08	Access Control and Index/Sector Decode	18X
A2B09	Access Control NO 1	19X
A2B10	Dual Channel Interrupt and Channel I	20X
A2C1	Channel I Terminator	21X
A2C2	Channel II Terminator	22X
A2D1	Channel I I/O	23X
A2D2	Channel II I/O	24X
A3	Deck Assembly	--
A3A01	Control Panel	25X
A3A02	Head Select and Read Amplifier	26X
A3A03	Writer	27X

Table continued on next page

TABLE 1-2. PHYSICAL LOCATION CODES (Contd)

PHYSICAL LOCATION CODE	TITLE	CROSS REFERENCE NUMBERS
A3A04	Power Amplifier	28X
A3A05	Track Servo Preamplifier	29X
A3C6	Drive Motor Capacitor	302
A3DM1	Drive Motor	302
A3HB1	Hysteresis Brake	302
A3K5	Start Triac	302
A3L1	Speed Transducer	103
A3L2	Velocity Transducer	072
A3L3	Pack Cover Solenoid (Optional)	102
A3S2	Heads Loaded Switch	302
A3S3	Pack Cover Switch	252
A3VC1	Voice Coil	312

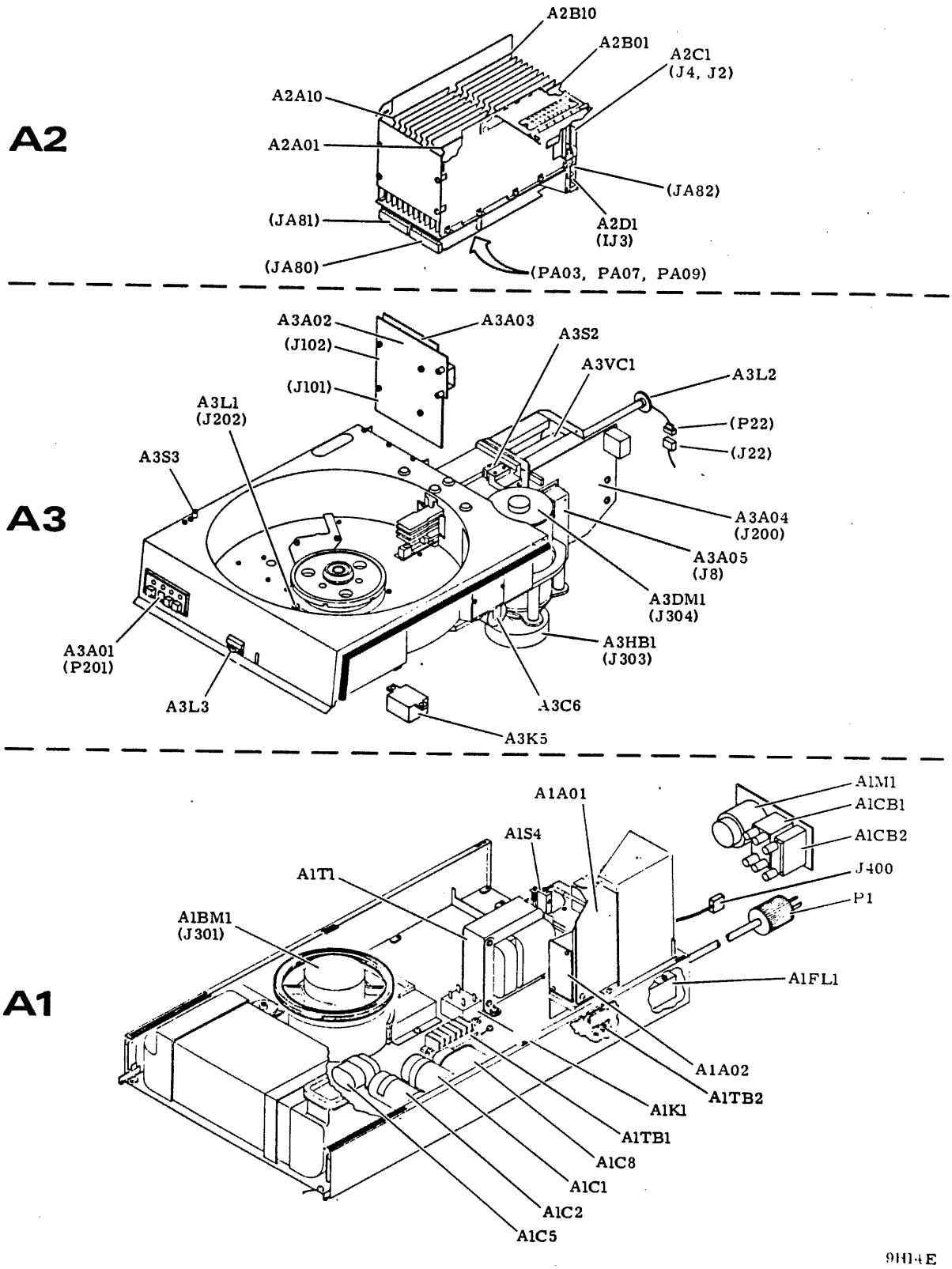

Figure 1-3. Physical Location Codes

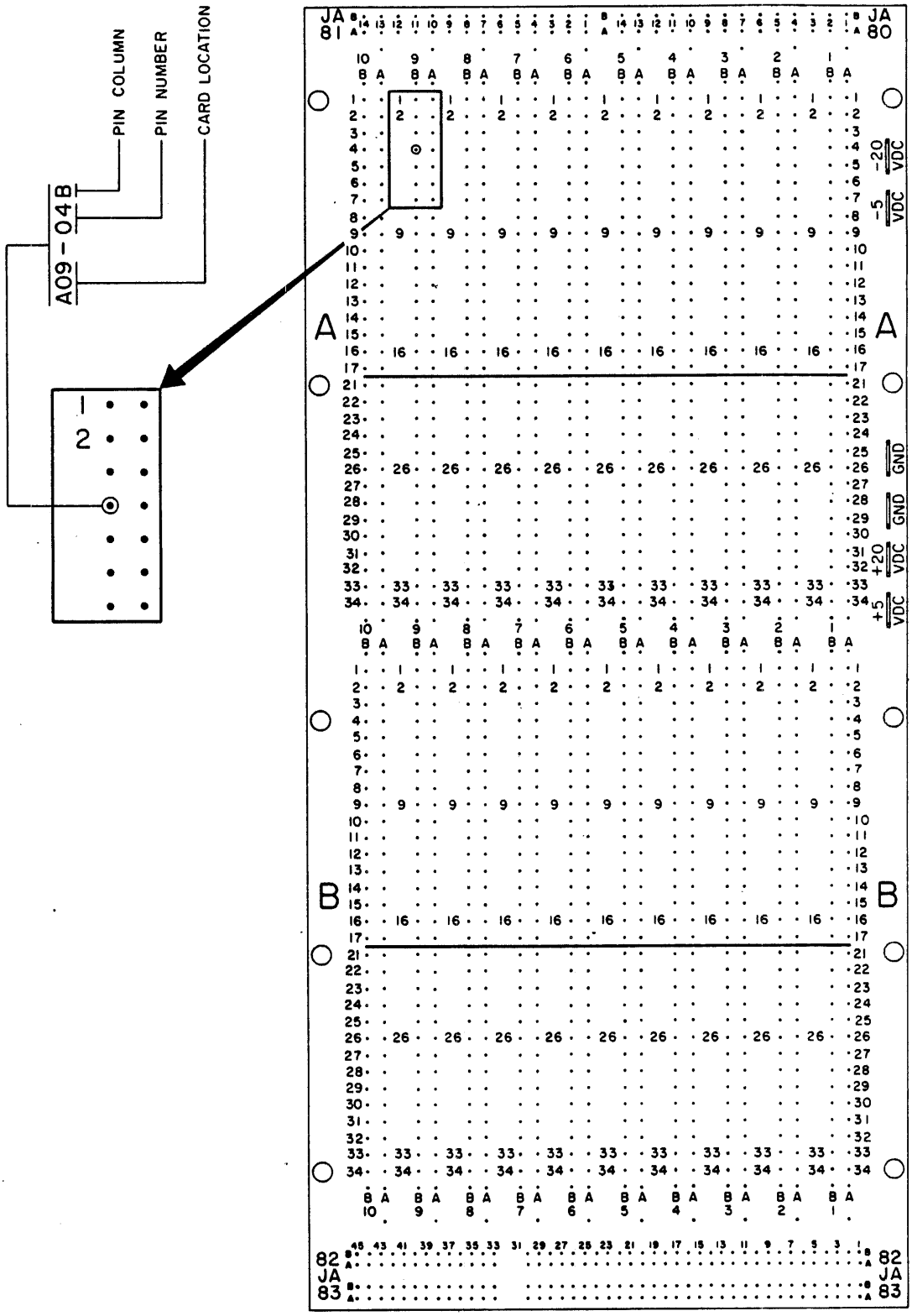

Figure 1-4. Backpanel Layout

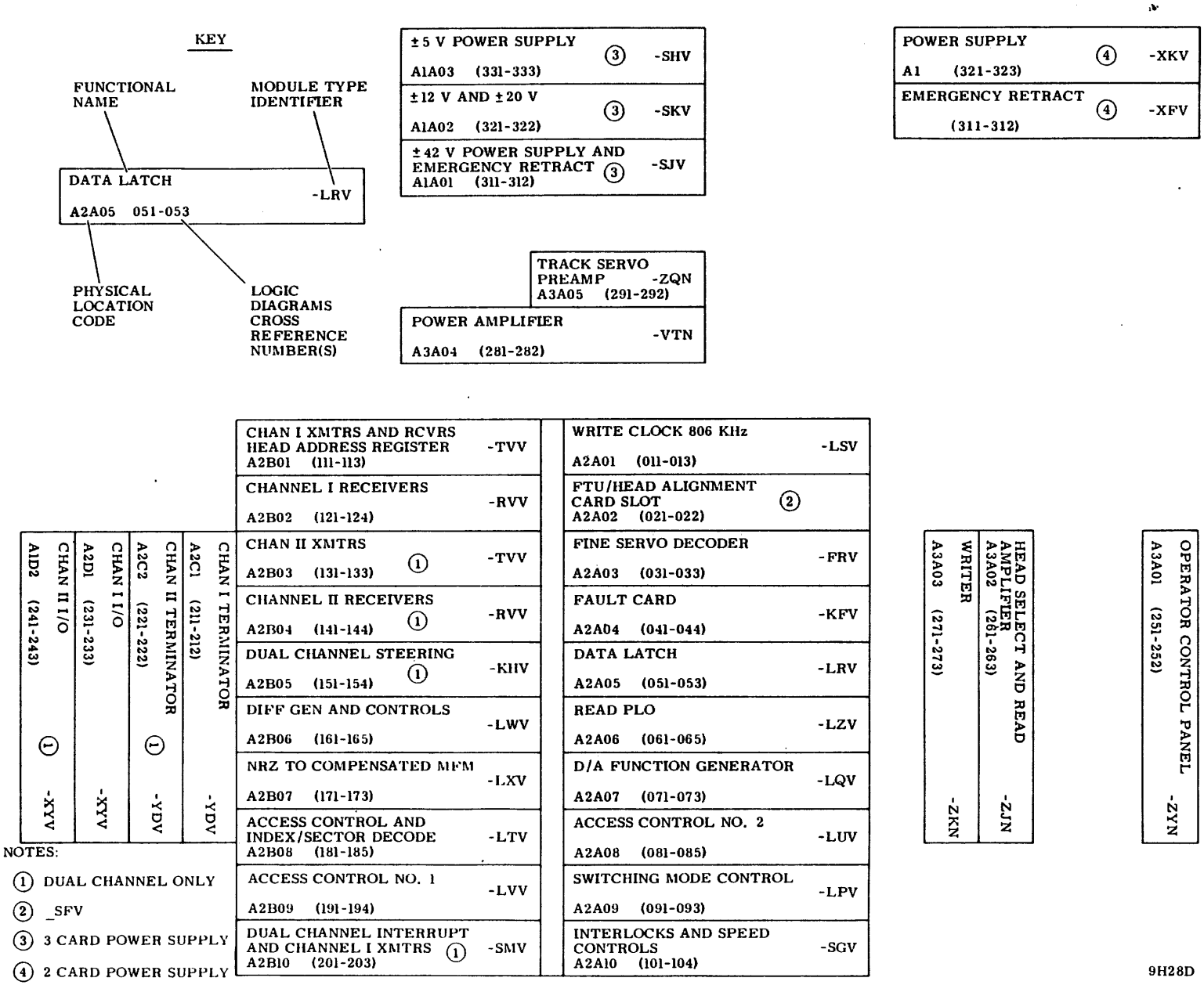

Figure 1-5. Chassis Map

LOGIC DIAGRAM SETS

REVISION STATUS OF SHEETS

1	2	3	4	5	6	7	8	9	10	11	12	13	14	15	16	17	18	19	20
A	A	A																	
B	B	B																	
C	C	B																	
D	C	D																	
E	E	D																	
F	E	F																	
G	G	F																	

REVISIONS

REV	ECO	DESCRIPTION	DRFT	DATE	CHK'D
A	PE23000	RELEASED	MLA		
B	PE48402	CORRECT DIAGRAMS	WEB	12-16-76	
C	PE48461	IMPROVE TIMING MARGIN	GR	5-10-77	
D	PE48523	ERROR CORRECTION	GR	5-10-77	
E	PE48555	IMPROVE TIMING MARGIN	GR	5-10-77	
F	PE48675	IMPROVE CLSV CARD	DM	1-25-78	
G		LABEL TEST POINTS	A.A.O	6-14-78	

UNUSED LOGIC ELEMENTS

TYPE	LOCATION	OUTPUT PIN (S)
10131	C2	14,15
10131	D2	14,15
10116	B1	6,7,14,15
10116	D1	2,3,6,7
10125	D3	4,13
10125	B2	4
140H	D4	6

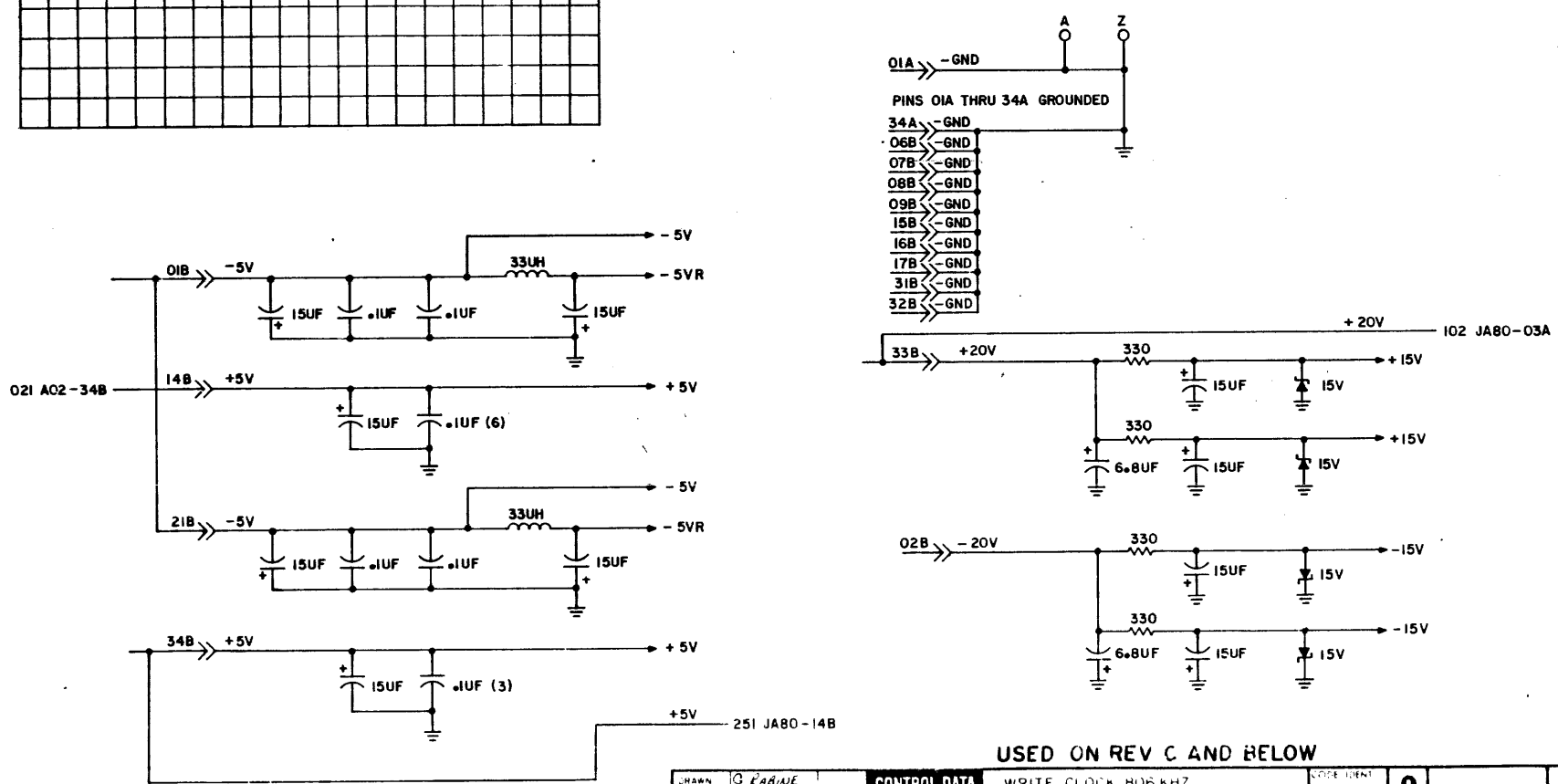

USED ON REV C AND BELOW

DRAWN	G RABINE	CONTROL DATA	WRITE CLOCK 806 KHZ TO 9.67 MHZ DIAGRAMS	CODE IDENT 19333	C	83322240	M G
CHECKED							
ENGINEER		NORMANDALE DIVISION	TYPE CLSV	SIZE 011	SHEET 1 OF 3	PAGE 1-11	
APPROVED							

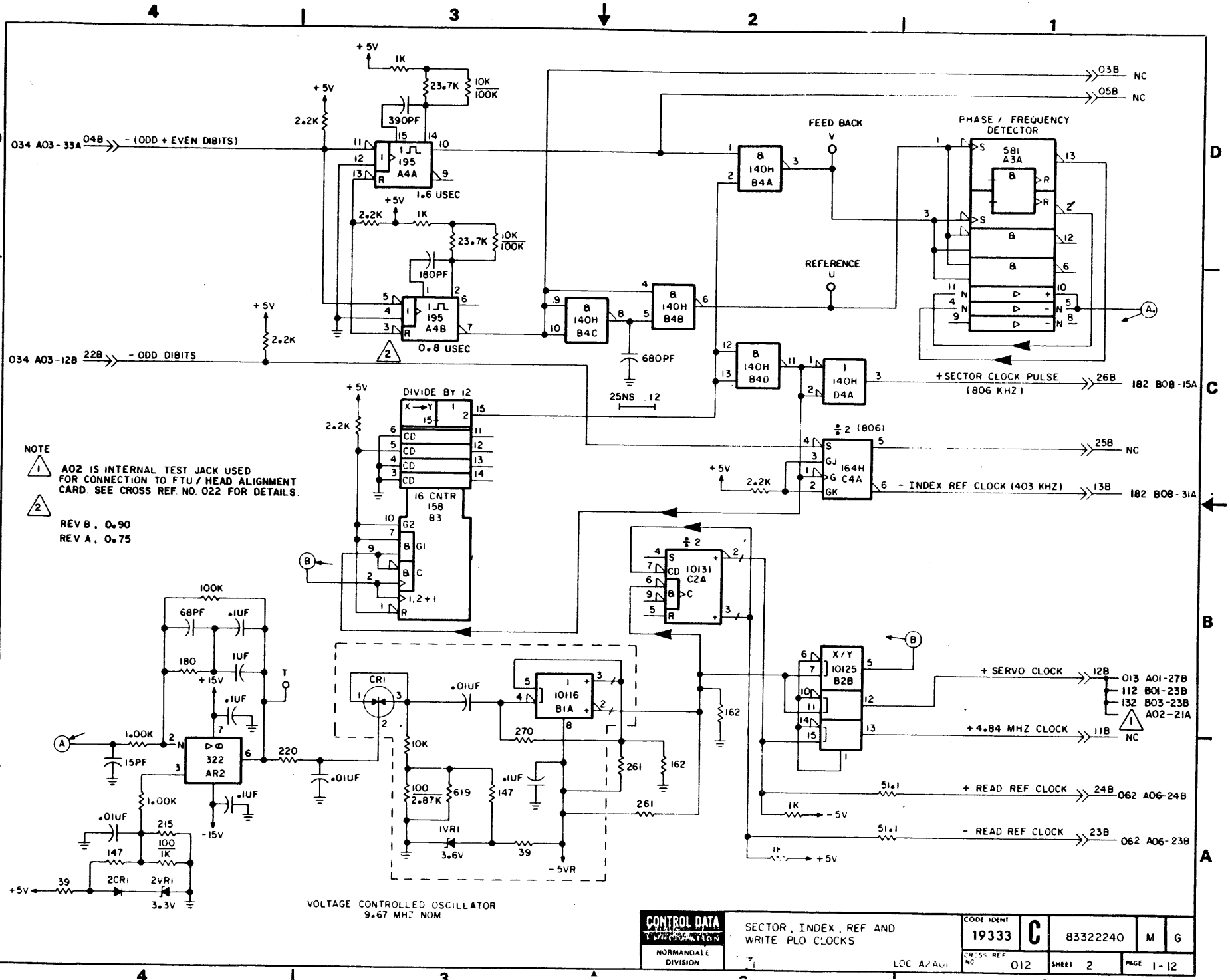

CONTROL DATA NORMANDALE DIVISION	SECTOR, INDEX, REF AND WRITE PLO CLOCKS	CODE IDENT 19333	C	83322240	M	G
	LOC A2A01	CROSS REF NO 012	SHEET 2	PAGE 1-12		

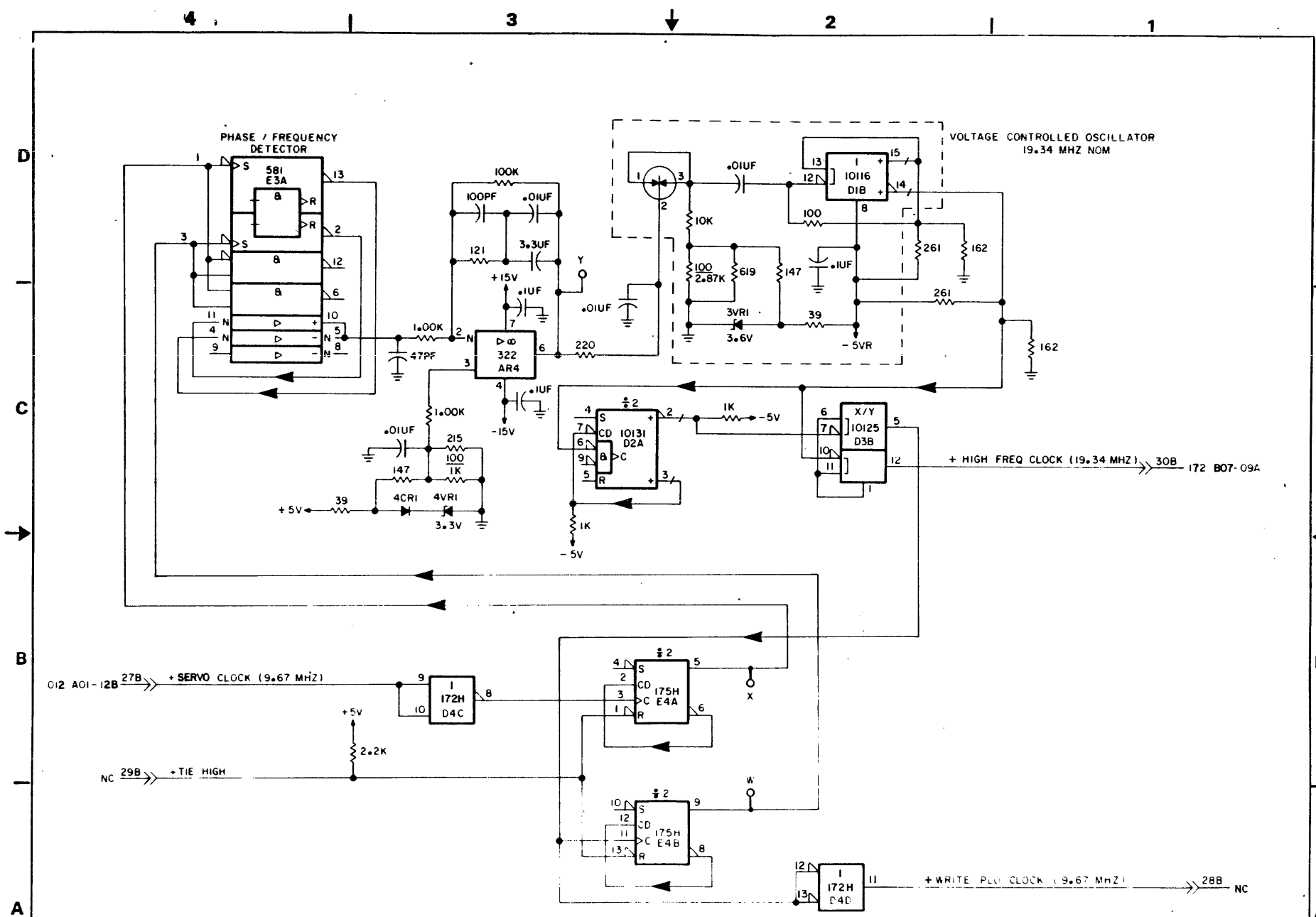

CONTROL DATA CORPORATION	SERVO AND READ	19333	C	83322240	M F
	A2A01	013	SHEET 3	PAGE 1-13/14	

REVISION STATUS OF SHEETS

1	2	3	4	5	6	7	8	9	10	11	12	13	14	15	16	17	18	19	20
A	A	A																	
B	B	B																	
C	C	B																	
D	D	D																	
E	E	E																	
F	F	F																	
G	G	G																	
H	H	G																	
J	H	J																	
K	K	K																	
L	L	L																	
M	M	M																	
N	M	M																	
P	M	M																	
R	R	R																	
S	S	R																	
T	T	T																	
U	T	U																	
V	V	U																	
W	V	W																	

UNUSED LOGIC ELEMENTS

TYPE	LOCATION	OUTPUT PIN (S)
10131	C2	14,15
10131	D2	14,15
10116	B1	6,7,14,15
10116	D1	2,3,6,7
10125	D3	4,13
10125	B2	4

REVISIONS

REV	ECO	DESCRIPTION	DRFT	DATE	CHK'D
A	PE23000	RELEASED	MLA	2-1-76	
B	PE48402	ERROR CORRECTIONS	VG	1-3-77	
C	PE48461	IMPROVE TIMING MARGIN	SB	2-28-77	
D	PE48523	ERROR CORRECTION	SB	4-6-77	
E	PE48555	MISSING IM	MA	4-19-77	
F	PE48650	CLSV CARD CHANGE	MA	7-6-77	
G	PE48675	ERROR CORRECTION	MA	7-7-77	
H	PE55185	CHANGE DELAY	MA	4-4-78	
J	PE55370	ERROR CORRECTION	A.A.O	8-10-78	
K	PE55754	IMPROVE BIAS RANGE	MA	4-10-79	
L	PE55724	OSC BIAS CKTS IMP	MA	4-12-79	
M	PE55885	RETURN CONFIG	TH	8-13-79	
N	PE57278	ADD WIRE INFO TO LOGIC	MF	11-4-80	
P	PE60081	DELETE CAPACITORS	MF	11-4-80	
R	PE60090	CHG RES AND DIODES	MF	11-4-80	
S	PE60129D	REDESIGN HFRV	MF	11-4-80	
T	PE60332	CHG TEST RESISTORS	MJ	1-11-82	
U	DJ00067	ADD NOTE TO CTR	MJ	5-12-82	DD
V	DJ00201	PLO CLOCK ERROR	MJ	5-12-82	DD
W	DJ00213	CHG CLSV CTR	MJ	5-12-82	DD

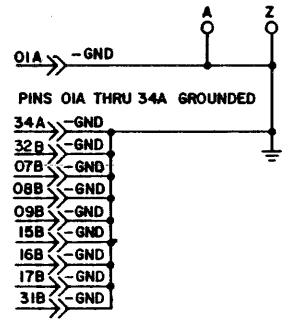

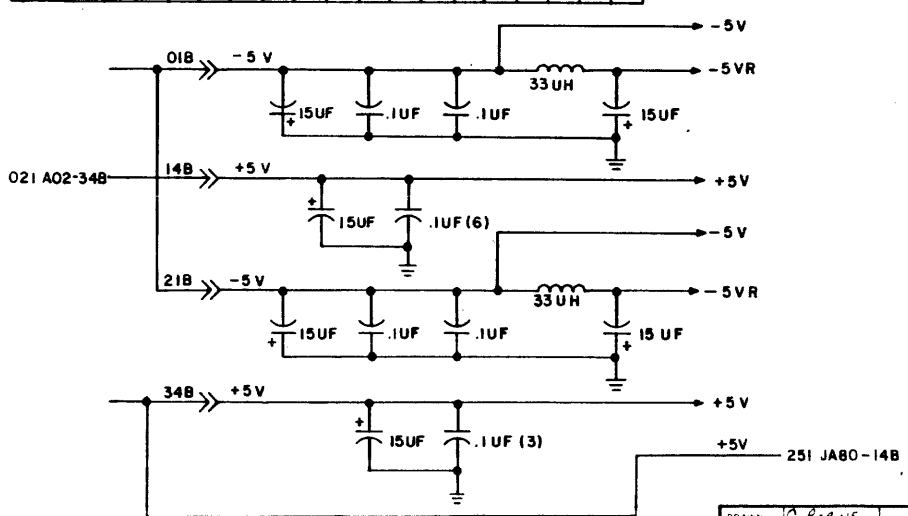

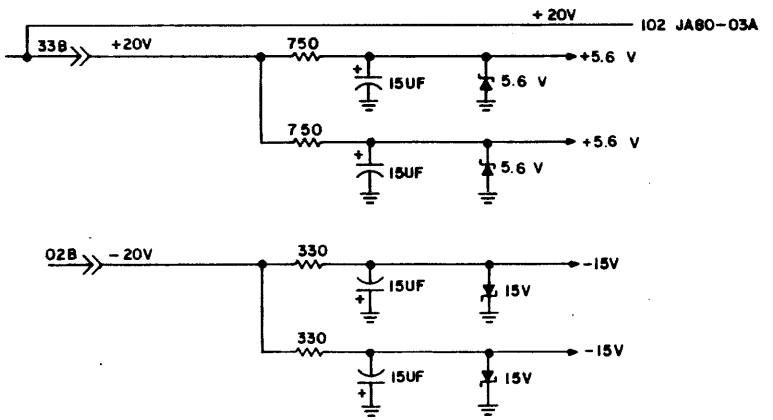

USED ON REV D AND ABOVE

DRAWN	G RABINE	CONTROL DATA	WRITE CLOCK 806 KHZ TO 9.67 MHZ DIAGRAMS	CODE IDENT 19333	C	DWG NO 83322240	W W
CHECKED							
ENGINEER		NORMANDALE DIVISION	TYPE CLSV LOC A2A01	CROSS REF NO 011		SHEET 1 OF 3	PAGE 1-14.1
APPROVED							

SMD 83214801

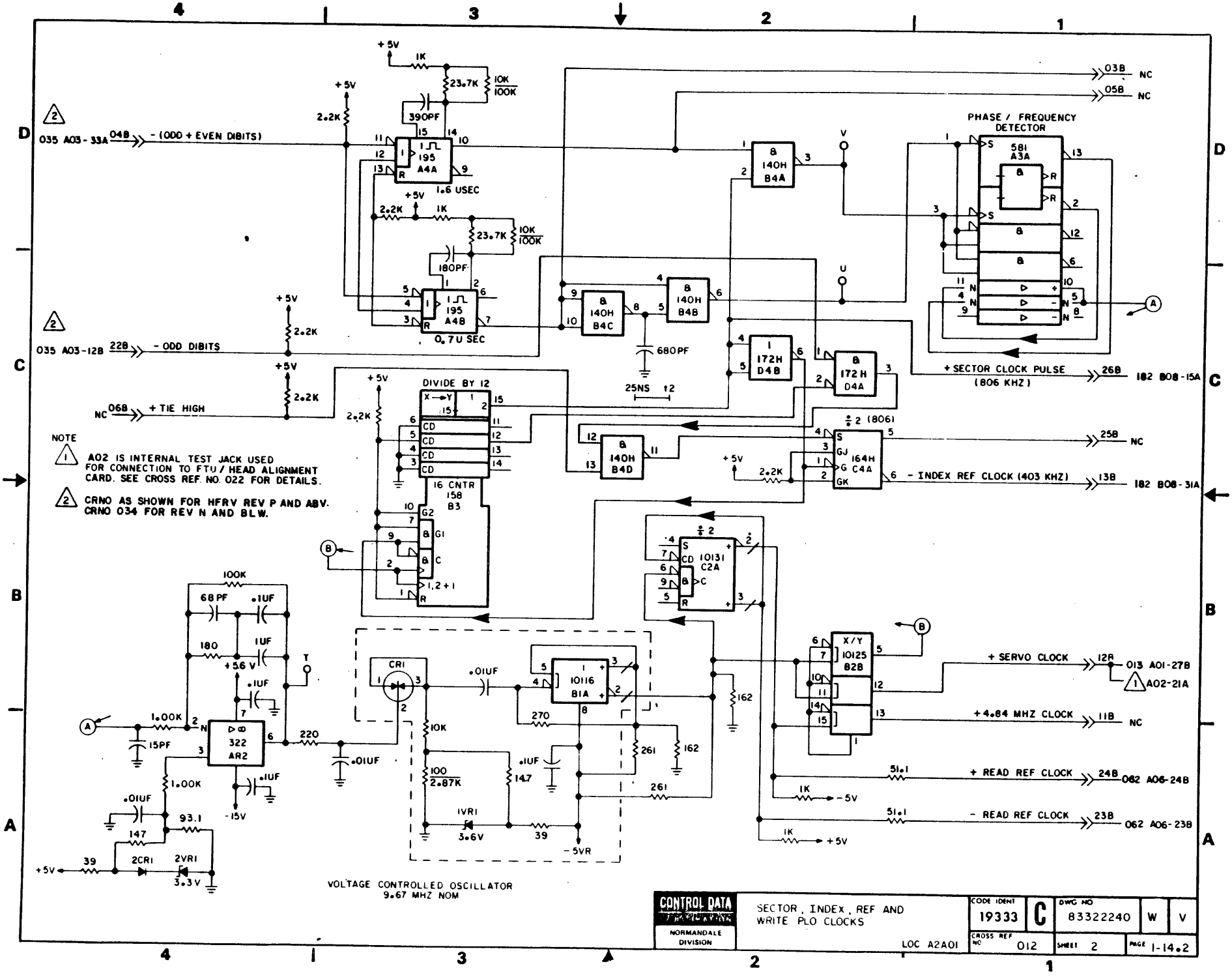

CONTROL DATA NORMANDALE DIVISION	SECTOR, INDEX, REF AND WRITE PLO CLOCKS LOC A2A01	CODE IDENT 19333	C	DWG NO 83322240 W V
		CROSS REF NO 012	SHEET 2	PAGE 1-14.2

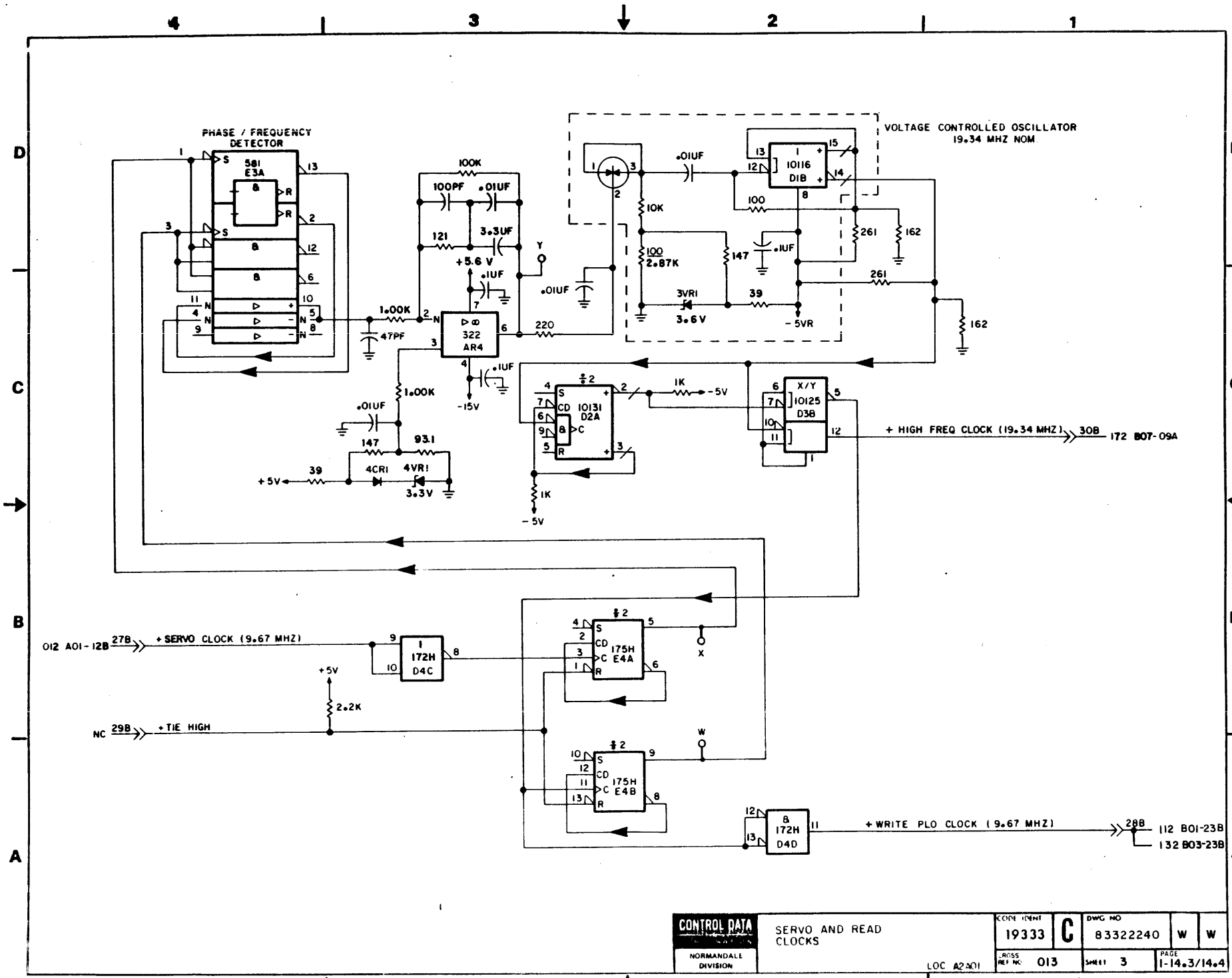

CONTROL DATA NORMANDALE DIVISION	SERVO AND READ CLOCKS	CODE IDENT 19333	C	DWG NO 83322240	W W
	LOC A2A01	CROSS REF NO 013		SHEET 3	PAGE 1-14.3/14.4

REVISION STATUS OF SHEETS																			
1	2	3	4	5	6	7	8	9	10	11	12	13	14	15	16	17	18	19	20
A	A																		
B	B																		
C	C																		
D	D																		

REVISIONS

REV.	ECO.	DESCRIPTION	DRFT	DATE	CHK'D
A	PE 23000	RELEASED	—	—	
B	PE 48402	ERR CORR			
C	PE 48568	ERR CORR	DM	7-26-77	
D	PE 48675	ERR CORR	DM	1-25-78	

01A ≫ -GND →

02B ≫ -20V → POWER AND GND SUPPLY TO HEAD ALIGNMENT CARD WHEN INSTALLING IN A02

33B ≫ +20V →

34A ≫ -GND →

34B ≫ +5V →

+5V → 011 A01-14B

APPLICABLE TO BK5XX=9762

DRAWN	8-25-76	CONTROL DATA CORPORATION NORMANDALE DIVISION	FTU/HEAD ALIGNMENT CARD SLOT WIRING DIAGRAMS LOC A2A02	CODE IDENT 19333	C	83322240	K D
CHECKED				CROSS REF 021		SHEET 1 OF 2	PAGE 1-15
ENGINEER							
APPROVED							

REF 83214802

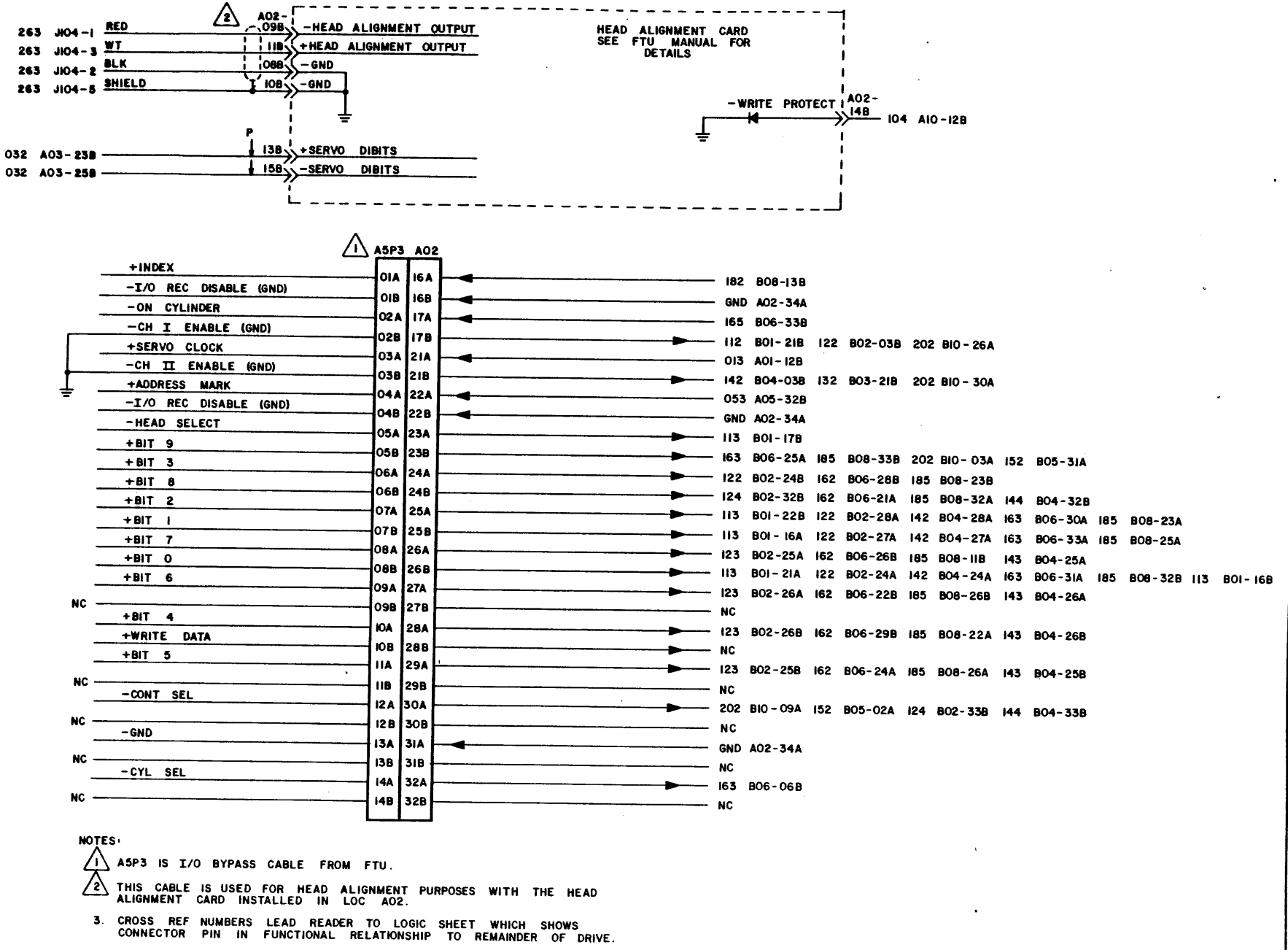

NOTES:

1. A5P3 IS I/O BYPASS CABLE FROM FTU.
2. THIS CABLE IS USED FOR HEAD ALIGNMENT PURPOSES WITH THE HEAD ALIGNMENT CARD INSTALLED IN LOC A02.
3. CROSS REF NUMBERS LEAD READER TO LOGIC SHEET WHICH SHOWS CONNECTOR PIN IN FUNCTIONAL RELATIONSHIP TO REMAINDER OF DRIVE.

CONTROL DATA CORPORATION NORMANDALE DIVISION	FTU/HEAD ALIGNMENT CARD SLOT (9762) LOC: A2A02	CODE IDENT 19333	C	83322240	E	D
		CROSS REF NO 022		SHEET 2	PAGE 1-16	

REVISION STATUS OF SHEETS

1	2	3	4	5	6	7	8	9	10	11	12	13	14	15	16	17	18	19	20
A	A	A	A																
B	B	A	A																
C	C	C	C																
D	C	D	D																
E	E	D	D																
F	E	F	D																
G	E	F	G																
H	E	F	H																

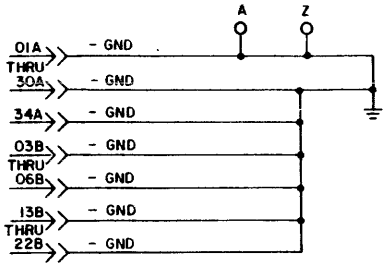

REVISIONS

REV	ECO	DESCRIPTION	DRFT	DATE	CHK'D
A	PE[illegible]	RELEASE	[illegible]	[illegible]	[illegible]
B	PE48296	CORRECT DIAGRAMS	WEB	11-1-76	
C	PE48402	ERR CORR			
D	PE48523	ERR CORR	DM	7-26-77	
E	PE48675	ERR CORR	DM	1-25-78	
F	PE55591	3215 TO 370	MF	7-15-80	
G	PE55944	CHG IC FAMILIES	MF	7-15-80	
H	PE55986	CHG RES VALUES	MF	11-4-80	

UNUSED LOGIC ELEMENTS

TYPE	LOCATION	OUTPUT PIN(S)
200	D3	4,6

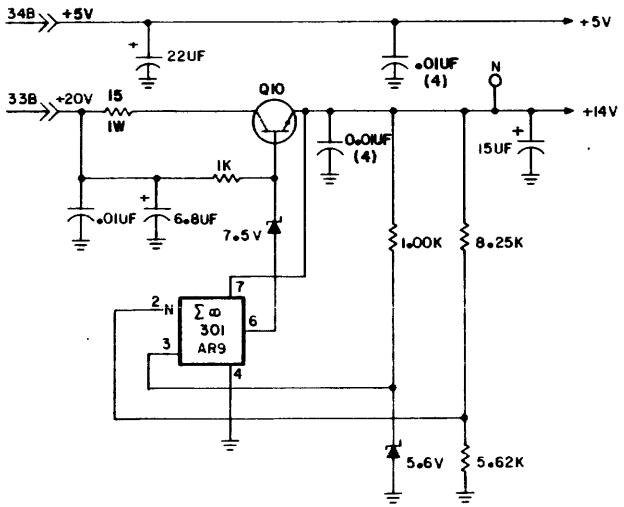

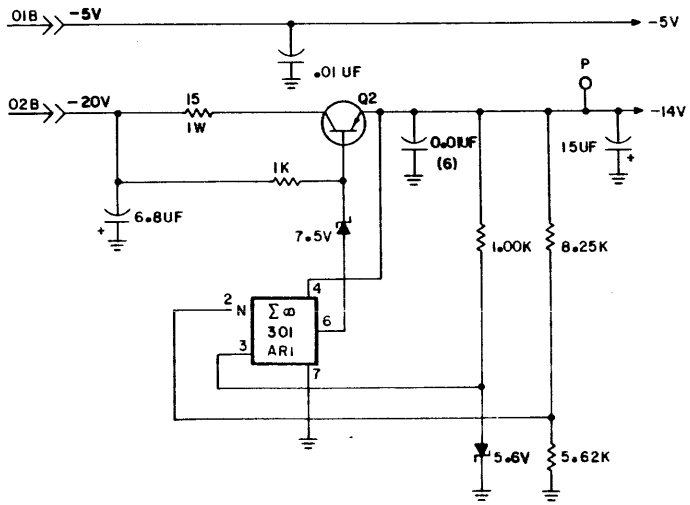

THIS SET USED FOR HFRV REV N & BELOW (BK5XX=9762)

DRAWN	M ANDERSON	CONTROL DATA CORPORATION	FINE SERVO DECODER DIAGRAMS	CODE IDENT 19333	C	83322240	Z H
CHECKED		NORMANDALE DIVISION	TYPE HFRV LOC A2A03	CROSS REF NO. 031	SHEET 1 OF 4	PAGE 1-17	
ENGINEER							
APPROVED							

REF 83214803

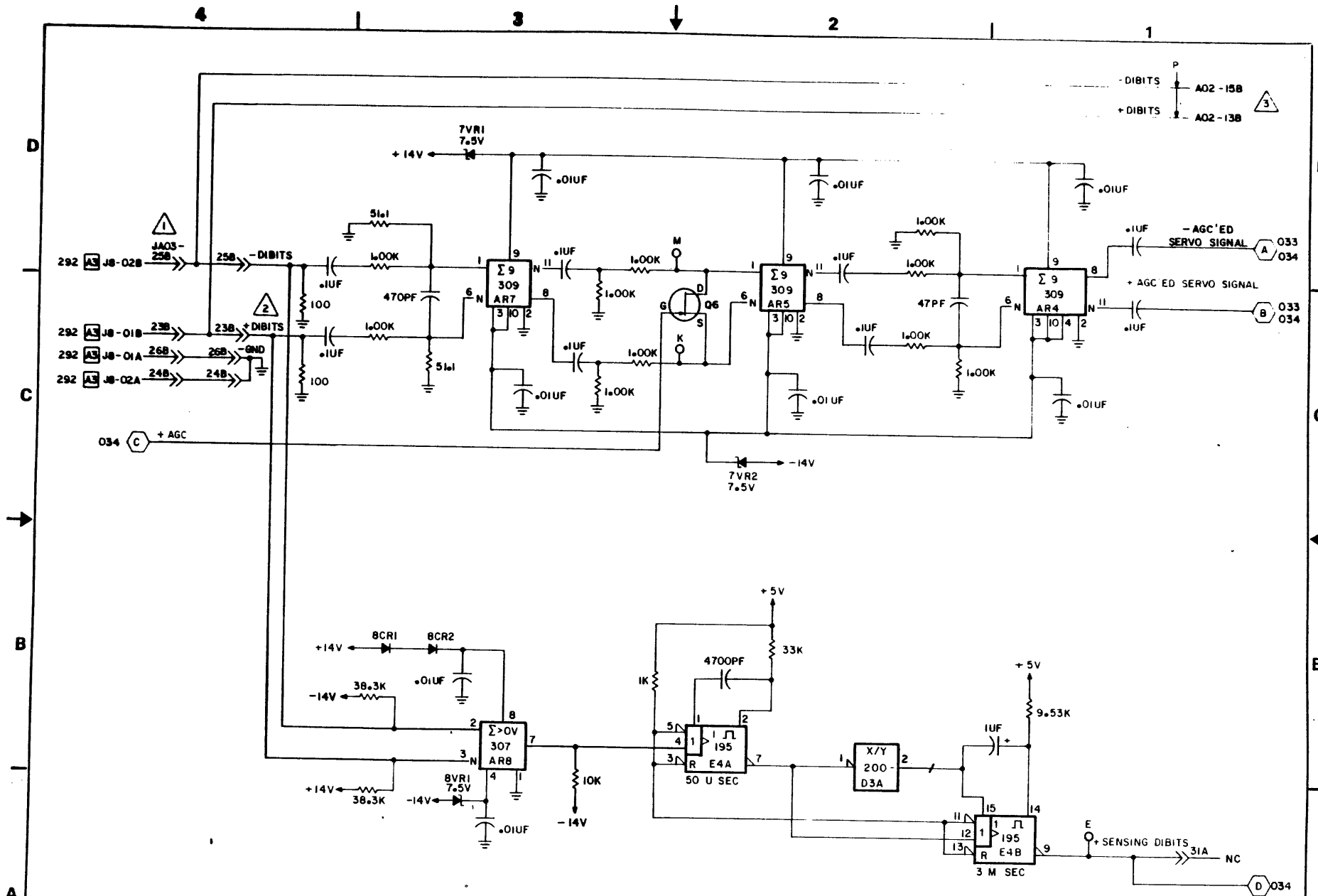

NOTES

1. REFER TO CROSS REFERENCE NUMBER 341 FOR CABLING INFORMATION.
2. DIBITS FROM SERVO PREAMP
3. TO HEAD ALIGNMENT CARD SEE CROSS REF NO 022 FOR DETAILS.

CONTROL DATA CORPORATION NORMANDALE DIVISION	SENSING DIBITS AND AGC'ED SERVO SIGNAL (9762) LOC A2A03	CODE IDENT 19333	C	83322240	E E
		HDSK REF NO 032		SHEET 2	PAGE 1-18

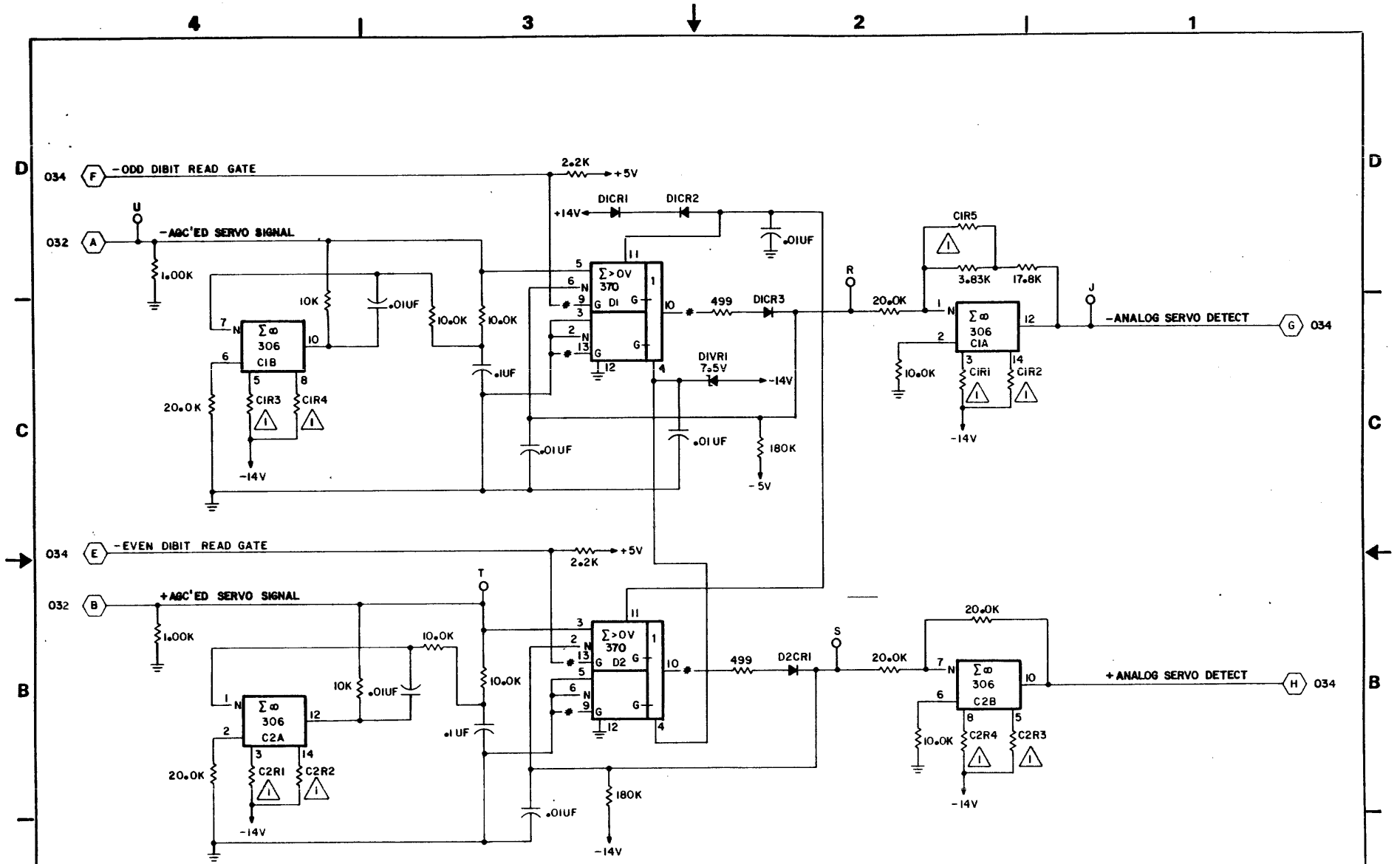

NOTES:

⚠1 TEST SELECTED RESISTORS

CONTROL DATA CORPORATION NORMANDALE DIVISION	TRACK SERVO SIGNAL AND CYL DETECT A AND B (9762) LOC A2A03	CODE IDENT 19333	C	83322240	T	F	
		CROSS REF NO 033		SHEET 3	PAGE 1-19		

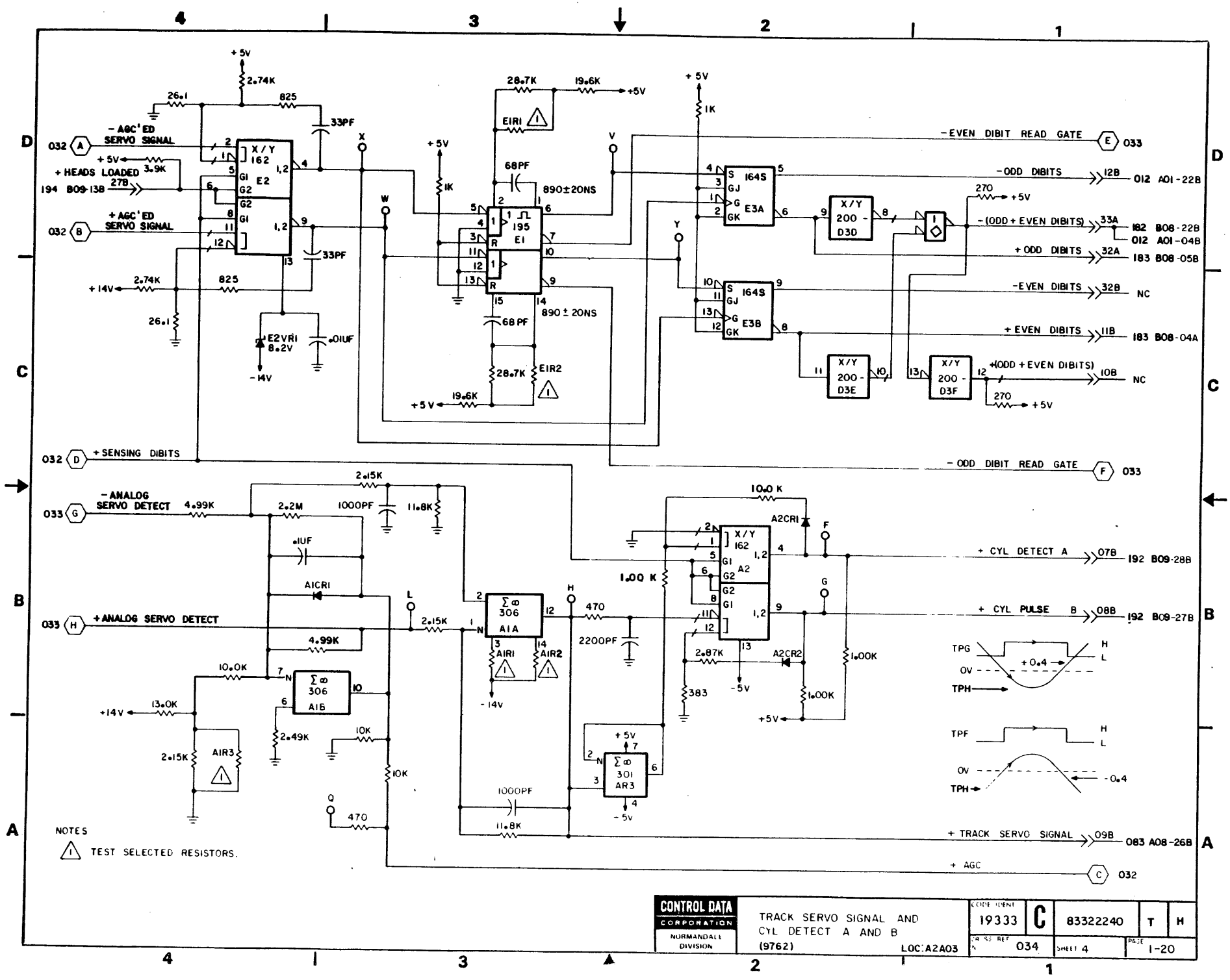

CONTROL DATA CORPORATION NORMANDALE DIVISION	TRACK SERVO SIGNAL AND CYL DETECT A AND B (9762) LOC:A2A03	CODE IDENT 19333	C	83322240	T H
		DRAWING REF NO. 034		SHEET 4	PAGE 1-20

REVISION STATUS OF SHEETS

1	2	3	4	5	6	7	8	9	10	11	12	13	14	15	16	17	18	19	20
A	A	A	A																
B	B	A	A																
C	C	C	C																
D	C	D	D																
E	E	D	D																
F	E	F	D																
G	E	F	G																
H	E	F	H																
J	J	J	J	J															
K		K																	

UNUSED LOGIC ELEMENTS

ELEMENTS	LOCATION	OUTPUT PINS (S)
324	D2	1
339	D5	7

UNUSED DIODE PACKS

LOCATION	PINS
B3	5,6,7,8,9,10,11,12

REVISIONS

REV	ECO	DESCRIPTION	DRFT	DATE	CHK'D
A	PE[illegible]	RELEASE	[illegible]		
B	PE48296	ERR CORR	MA	11-17-76	
C	PE48402	ERROR CORRECTIONS	VG	1-4-77	
D	PE48523	ERROR CORRECTION	SB	4-6-77	
E	PE48675	ERROR CORRECTION	DM	7-7-77	
F	PE55593	321S TO 370	MA	2-13-79	
G	PE55944	CHG IC FAMILIES	CB	10-17-79	
H	PE55986	CHG RES VALUES	TH	11-4-79	
J	PE[illegible]	HFRV COST REDUCTION	CB	5-15-80	
K	DJ00280	CHG CAP ON HFRV	MJ	5-24-83	

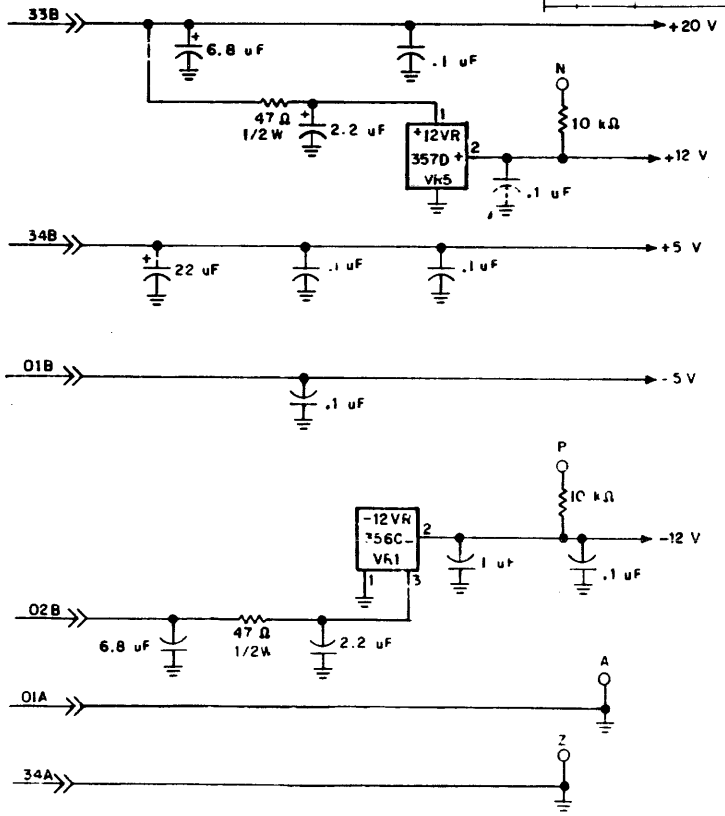

THIS SET USED FOR HFRV REV P & ABOVE (BK5XX = 9762)

DRAWN M ANDERSON	CONTROL DATA NORMANDALE DIVISION	FINE SERVO DECODER DIAGRAMS TYPE HFRV LOC A2A03	CODE IDENT 19333	C	83322240	Z K
ENGINEER			CROSS REF 031	SHEET 1 OF 5	PAGE 1-20 1	

REF 83214803

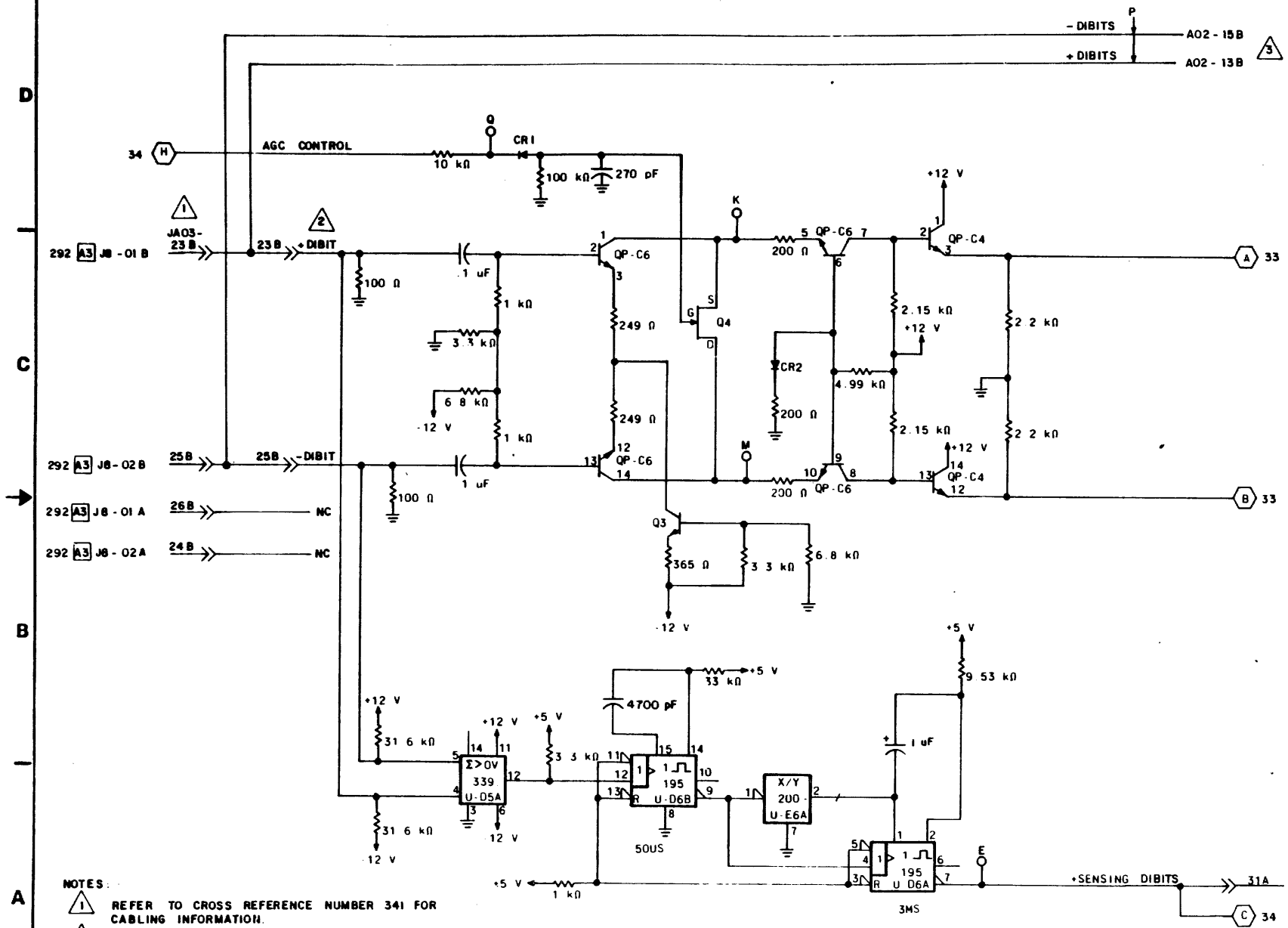

NOTES:

1. REFER TO CROSS REFERENCE NUMBER 341 FOR CABLING INFORMATION.
2. DIBITS FROM SERVO PREAMP
3. TO HEAD ALIGNMENT CARD. SEE CROSS REF NO 022 FOR DETAILS

MAGNETIC PERIPHERALS INC.	SENSING DIBITS AND AGC'ED SERVO SIGNAL (9762) LOC A2A03	N. HMANDALE PERATIONS	C	83322240	Z J
		CODE IDENT 19333		DWG NO 032	SHEET 2	1-20.2

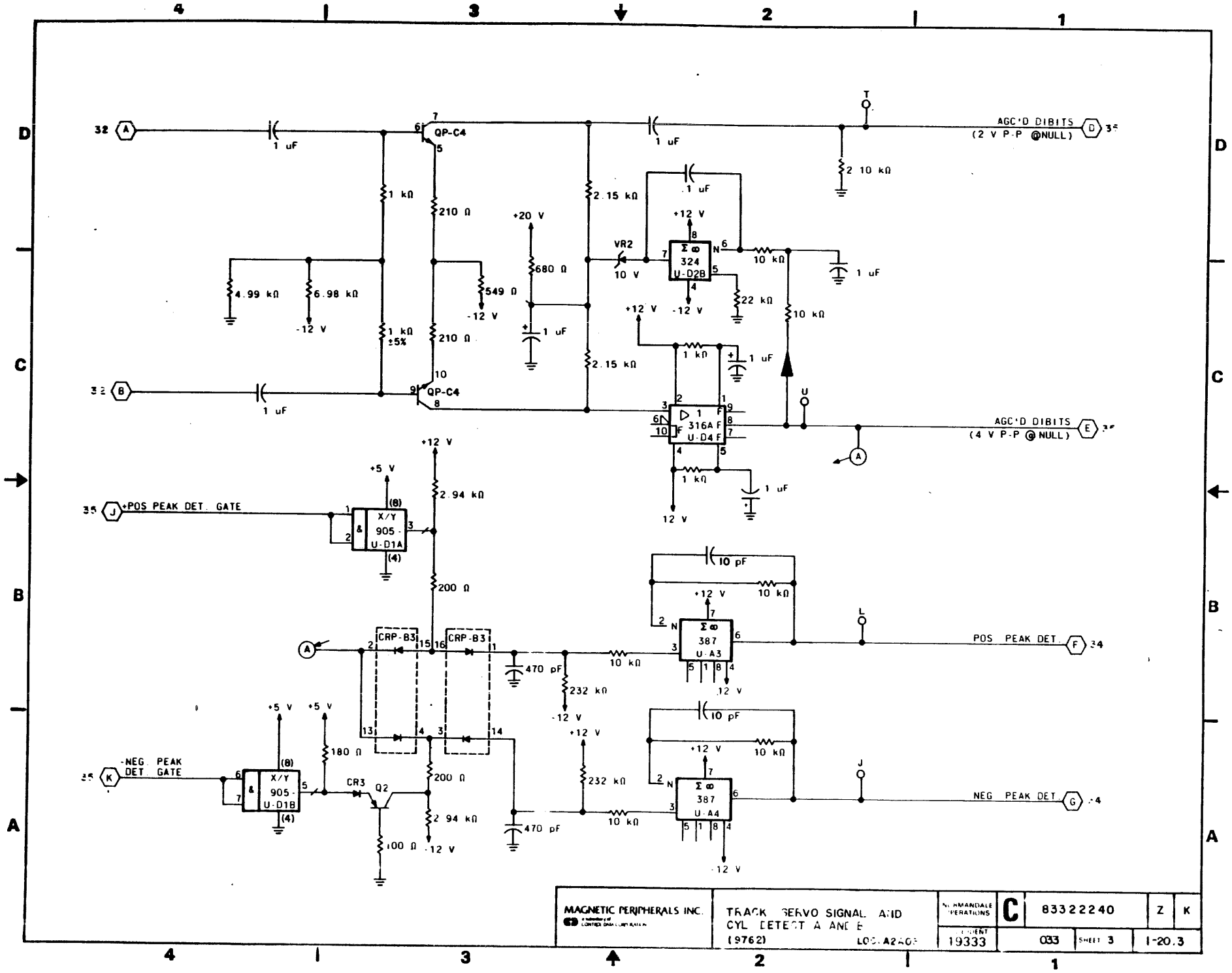

AGC'D DIBITS (2 V P-P @NULL)
AGC'D DIBITS (4 V P-P @ NULL)
+POS PEAK DET. GATE
-NEG. PEAK DET. GATE
POS PEAK DET.
NEG PEAK DET.
QP-C4
324 U-D2B
316A U-D4
X/Y 905 U-D1A
X/Y 905 U-D1B
387 U-A3
387 U-A4
CRP-B3
CR3
Q2
VR2
MAGNETIC PERIPHERALS INC.
TRACK SERVO SIGNAL AND CYL DETECT A AND B
(9762)
NORMANDALE OPERATIONS
C
83322240
Z
K
19333
033
SHEET 3
1-20.3

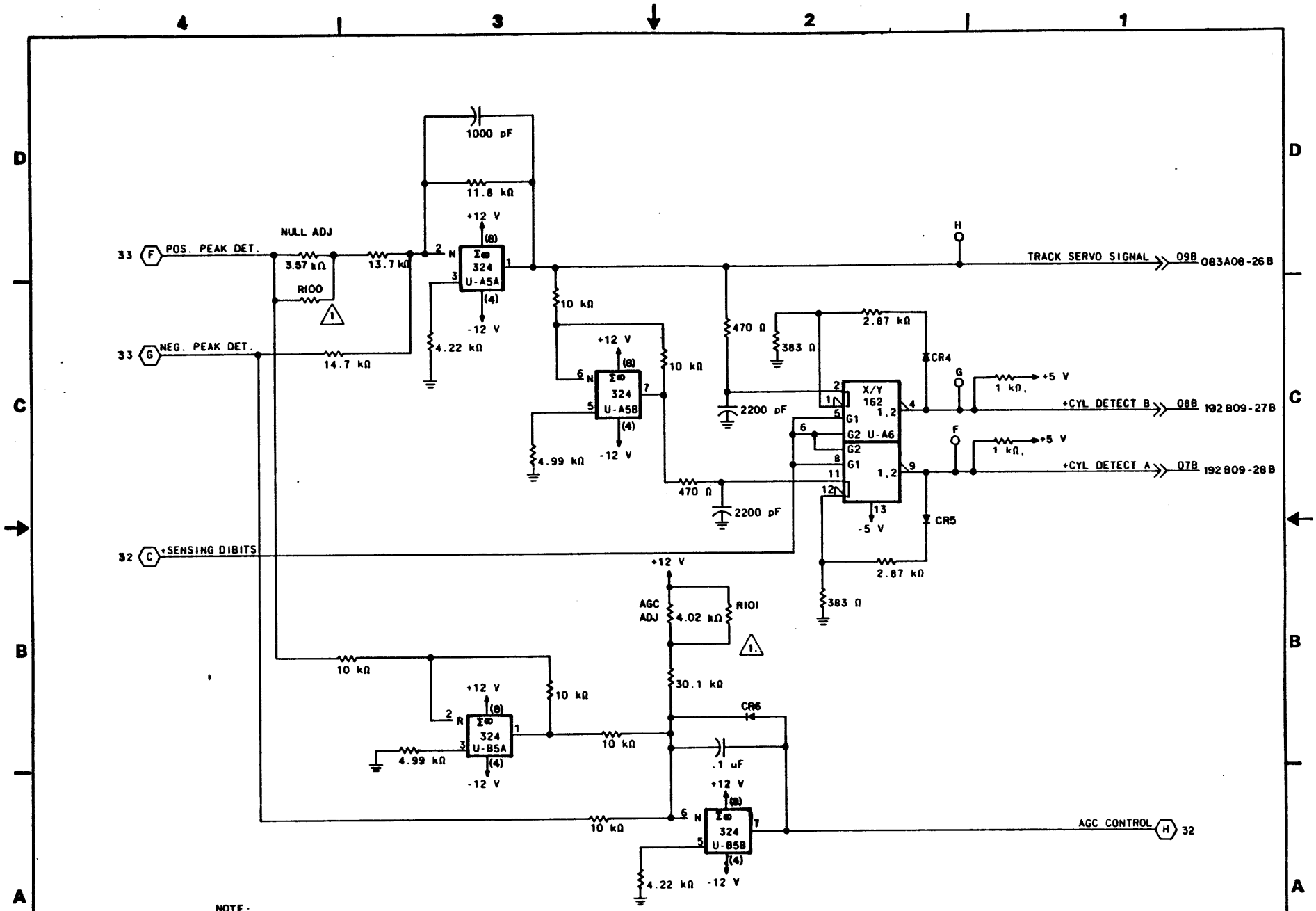
1000 pF
11.8 kΩ
+12 V
NULL ADJ
33 F POS. PEAK DET.
3.57 kΩ
R100
13.7 kΩ
Σω 324 U-A5A
-12 V
4.22 kΩ
33 G NEG. PEAK DET.
14.7 kΩ
10 kΩ
+12 V
Σω 324 U-A5B
-12 V
4.99 kΩ
10 kΩ
470 Ω
2200 pF
470 Ω
383 Ω
2.87 kΩ
CR4
X/Y 162 1,2 G1 G2 U-A6
+5 V
1 kΩ
+CYL DETECT B 08B 192809-27B
+CYL DETECT A 07B 192809-28B
-5 V
CR5
2.87 kΩ
383 Ω
TRACK SERVO SIGNAL 09B 083A08-26B
32 C +SENSING DIBITS
+12 V
AGC ADJ
4.02 kΩ
R101
30.1 kΩ
CR6
.1 uF
10 kΩ
Σω 324 U-B5A
-12 V
4.99 kΩ
Σω 324 U-B5B
4.22 kΩ
AGC CONTROL H 32
NOTE:
1 TEST SELUTED RESISTORS
MAGNETIC PERIPHERALS INC.
CYL DETECT A AND B
(9762)
LOC A2A03
NORMANDALE OPERATIONS
C
83322240
Z
J
CODE IDENT 19333
CROSS REF NO. 034
SHEET 4
I-20.4

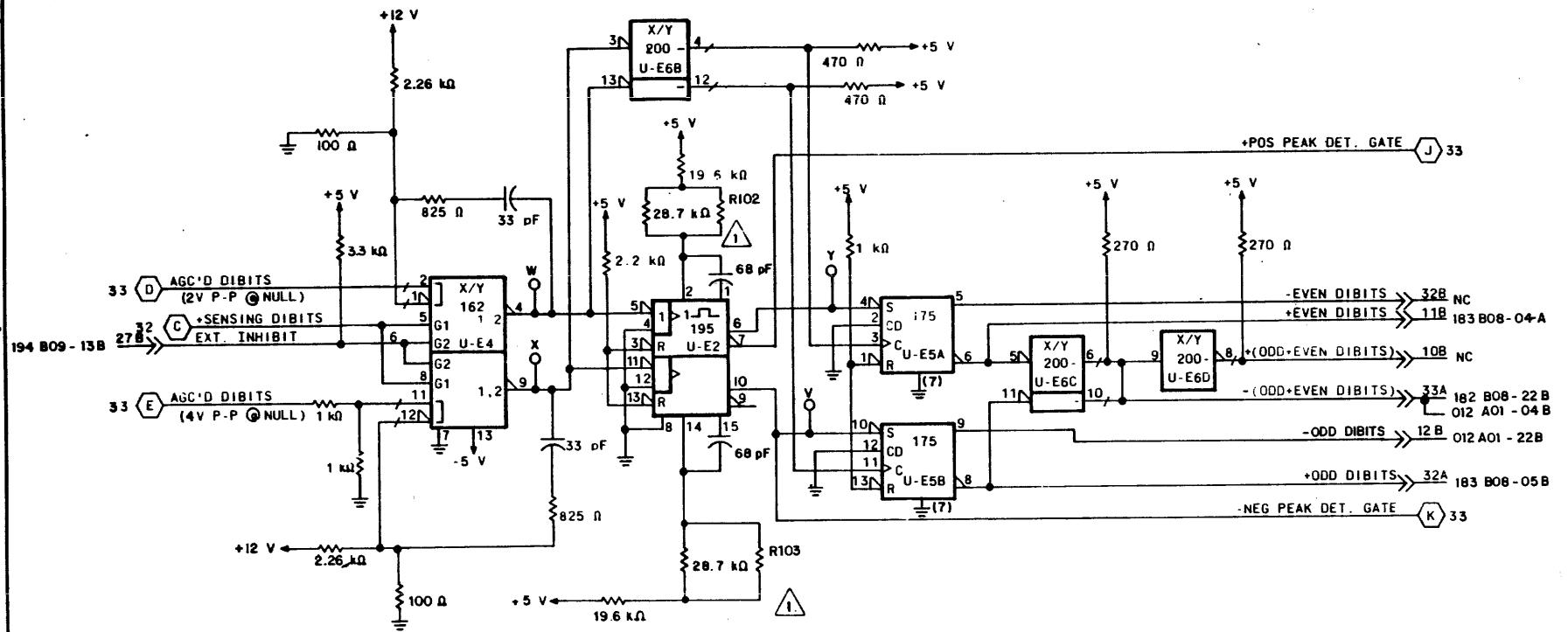

NOTE:
1 TEST SELECTED RESISTOR

MAGNETIC PERIPHERALS INC.	TRACK SERVO SIGNAL	NORMANDALE OPERATIONS	C	83322240	Z	J
	(9762) LOC. A2A03	CODE IDENT 19333	DWG REF NO 035	SHEET 5	I-20.5/6	

REVISION STATUS OF SHEETS

1	2	3	4	5	6	7	8	9	10	11	12	13	14	15	16	17	18	19	20
A	A	A	A																
B	A	B	A																
C	C	C	C																
D	D	D	D																
E	D	E	E																
F	D	E	F																
G	D	G	F																
G	D	H	F																

REVISIONS

REV	ECO	DESCRIPTION	DRFT	DATE	CHK'D
A	PE23000	RELEASED	MLA		
B	PE48296	CORRECT DIAGRAMS	WEB	11-1-76	
C	PE48402	ERR CORR			
D	PE48523	ERR CORR	DM	7-26-77	
E	PE48675	ERR CORR	DM	1-25-78	
F	PE55370	ERR CORR	A A O	6-15-78	
G	PE57173	CHANGE IC FAMILIES	MF	11-4-80	
H	PE57473A	CHG RESISTORS	MJ	FII-82	

MAINTENANCE SWITCHES AND FAULT INDICATORS ON CARD EDGE

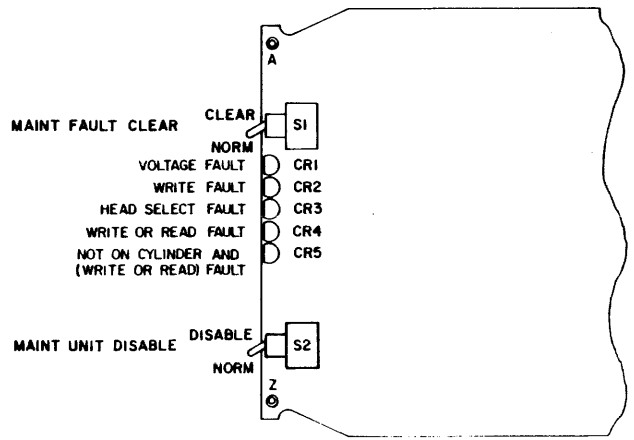

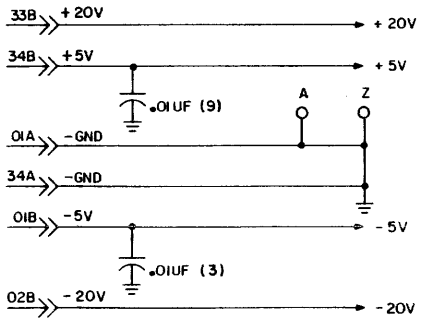

APPLICABLE TO ALL BK5XX UNITS EXCEPT BK5CI-E/F/J/K.

DRAWN	G RABINE 8/21/78	CONTROL DATA CORPORATION	FAULT CARD DIAGRAMS	CODE IDENT 19333	C	83322240	Z H
CHECKED							
ENGINEER		NORMANDALE DIVISION	TYPE DKFV LOC A2A04	CHANGE NO 041		SHEET 1 OF 4	PAGE 1-207
APPROVED							

REF 83214804

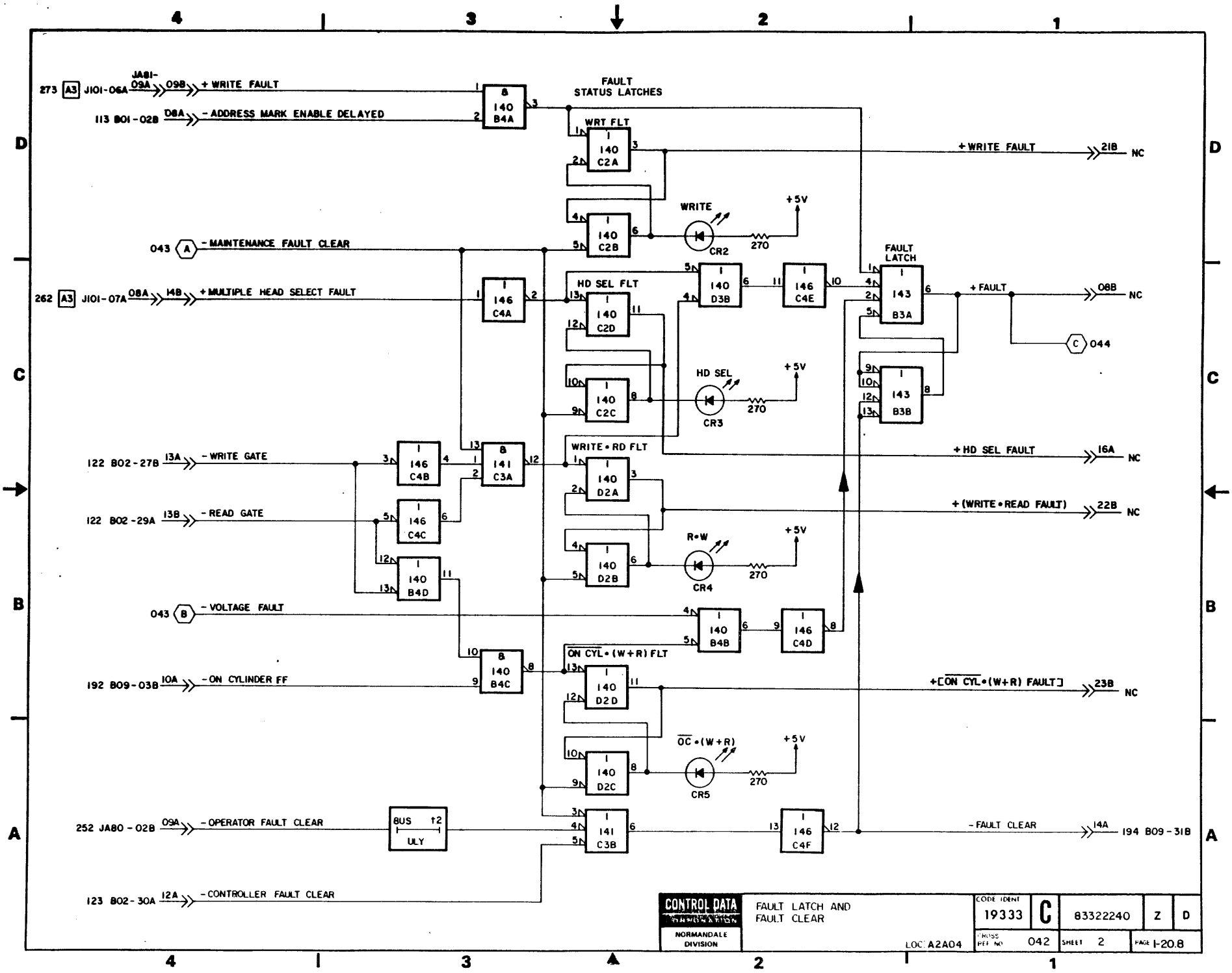
FAULT STATUS LATCHES
+ WRITE FAULT
- ADDRESS MARK ENABLE DELAYED
- MAINTENANCE FAULT CLEAR
+ MULTIPLE HEAD SELECT FAULT
- WRITE GATE
- READ GATE
- VOLTAGE FAULT
- ON CYLINDER FF
- OPERATOR FAULT CLEAR
- CONTROLLER FAULT CLEAR
WRT FLT
HD SEL FLT
WRITE • RD FLT
ON CYL • (W+R) FLT
OC • (W+R)
WRITE
HD SEL
R•W
CR2
CR3
CR4
CR5
270
+5V
FAULT LATCH
+ FAULT
+ HD SEL FAULT
+ (WRITE • READ FAULT)
+ [ON CYL • (W+R) FAULT]
- FAULT CLEAR
CONTROL DATA
NORMANDALE DIVISION
FAULT LATCH AND FAULT CLEAR
LOC A2A04
CODE IDENT 19333
C
83322240
Z
D
CROSS REF NO 042
SHEET 2
PAGE 1-20.8

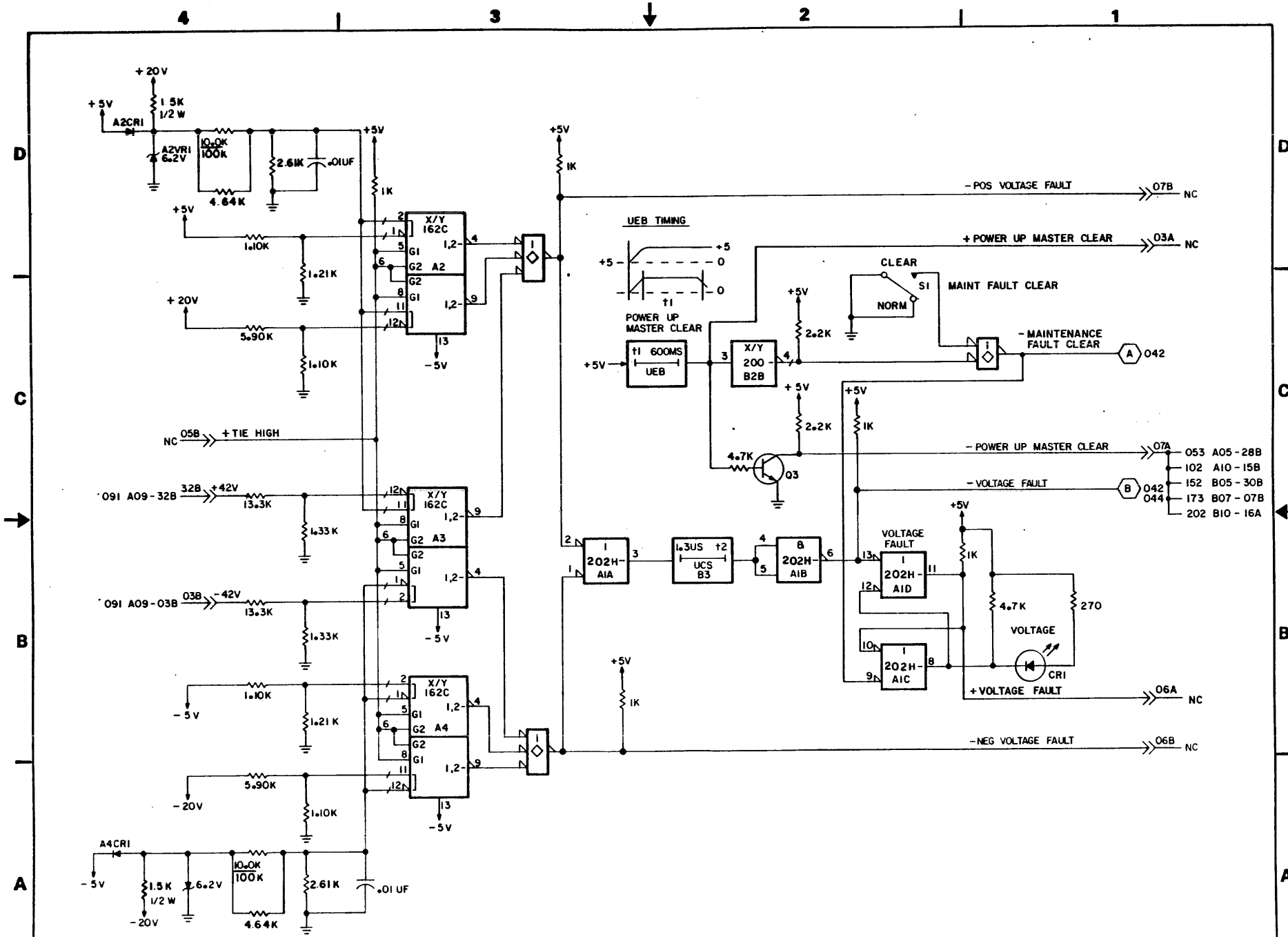

CONTROL DATA NORMANDALE DIVISION	POWER UP MASTER CLEAR, MAINT FAULT CLEAR AND VOLTAGE FAULT DETECT LOC A2A04	CODE IDENT 19333	C	83322240	Z T
		CROSS REF NO. 043		SHEET 3	PAGE 1-20.9

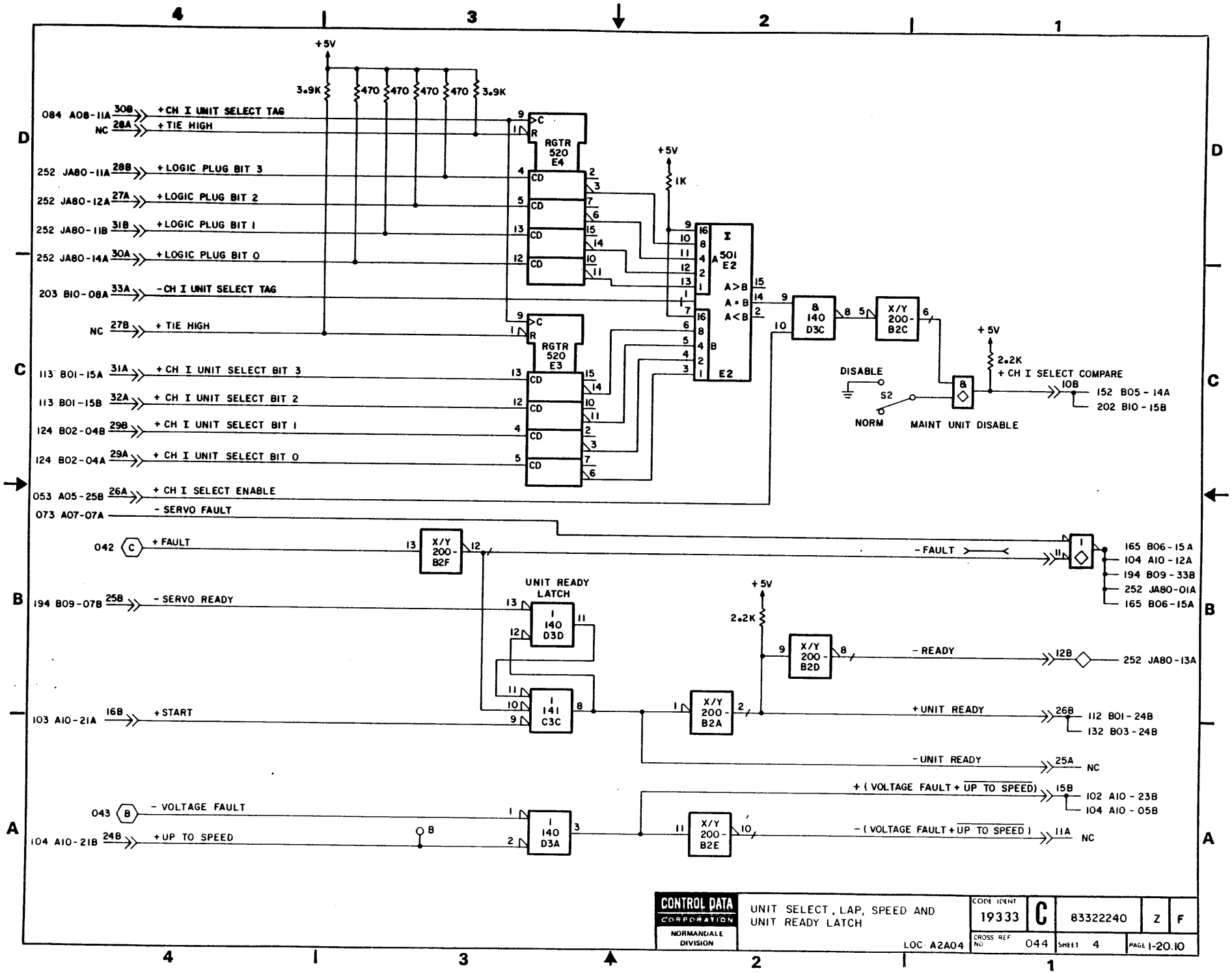

CONTROL DATA CORPORATION NORMANDALE DIVISION	UNIT SELECT, LAP, SPEED AND UNIT READY LATCH LOC A2A04	CODE IDENT 19333	C	83322240	Z	F
		CROSS REF NO 044	SHEET 4	PAGE 1-20.10		

REVISIONS

REV	ECO	DESCRIPTION	DRFT	DATE	CHK'D
A	PE23000	RELEASED	MF	4-8-81	[illegible]
	PE60448	ADD FET TO -KFV			

REVISION STATUS OF SHEETS

1	2	3	4	5	6	7	8	9	10	11	12	13	14	15	16	17	18	19	20
A	A	A	A																

MAINTENANCE SWITCHES AND
FAULT INDICATORS ON CARD EDGE

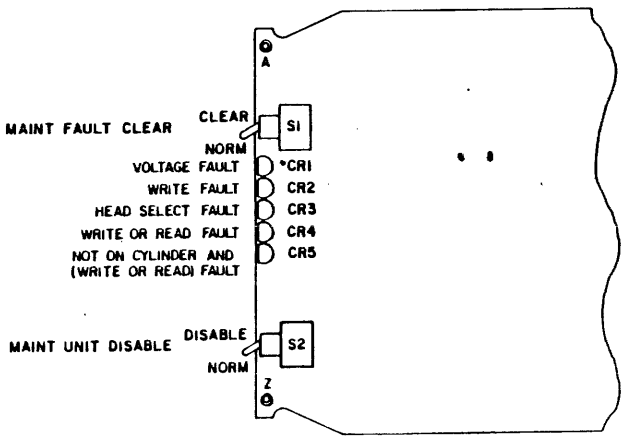

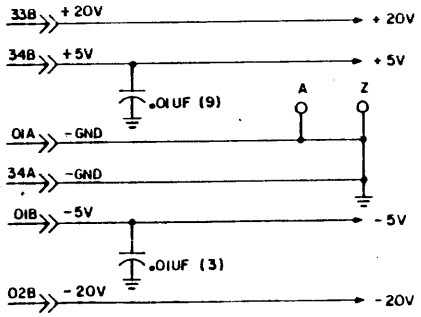

APPLICABLE TO BK5C1-E/F/J/K ONLY.

DRAWN	G. Rabine	8/21/78	CONTROL DATA	FAULT CARD DIAGRAMS	CODE IDENT 19333	C	83322240	K	A
CHECKED									
ENGINEER	[illegible]	[illegible]	NORMANDALE DIVISION	TYPE RKFV LOC A2A04	CROSS REF NO 041		SHEET 1 OF 4	PAGE 1-21	
APPROVED									

REF 83214866

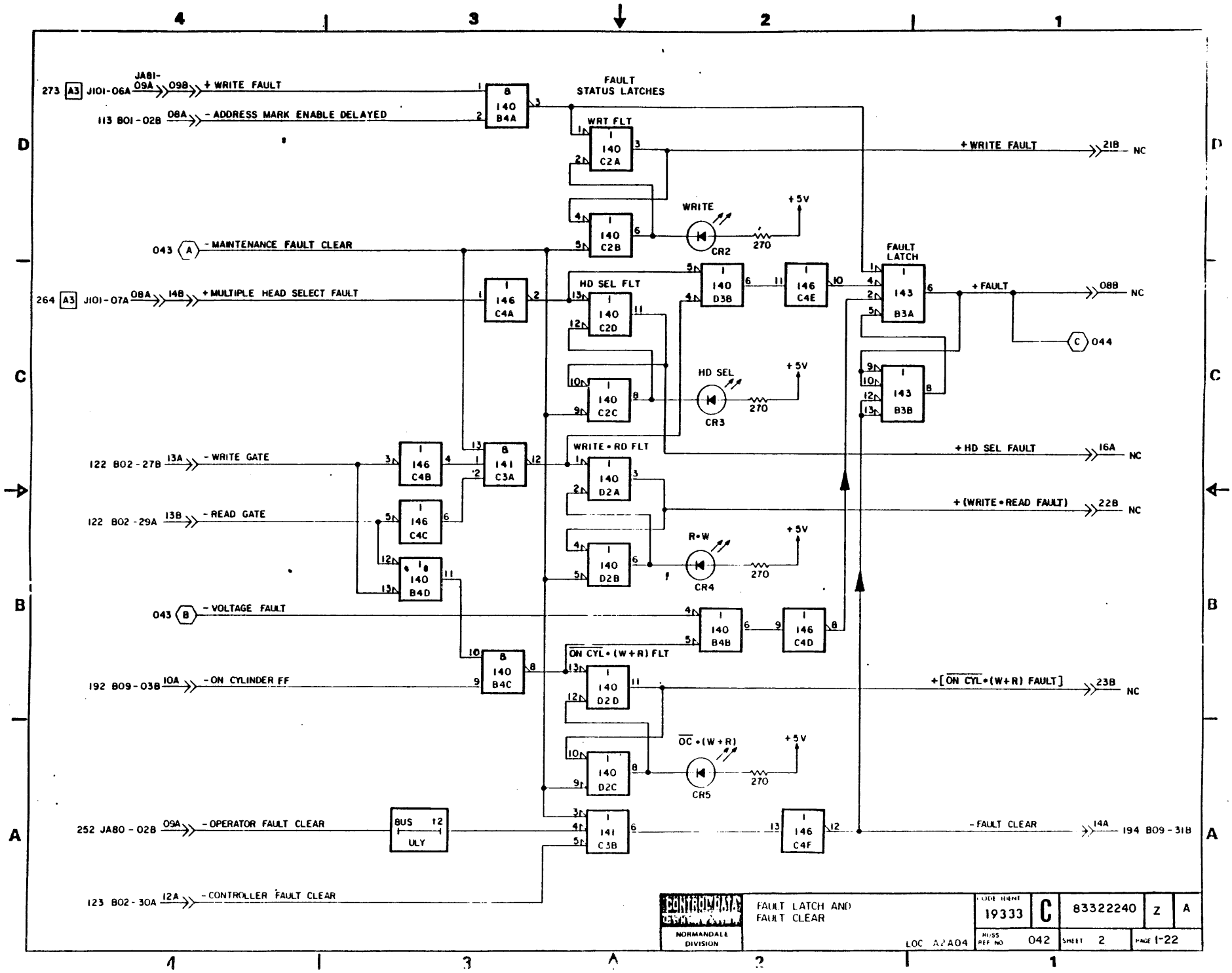
FAULT STATUS LATCHES
+ WRITE FAULT
- ADDRESS MARK ENABLE DELAYED
- MAINTENANCE FAULT CLEAR
+ MULTIPLE HEAD SELECT FAULT
- WRITE GATE
- READ GATE
- VOLTAGE FAULT
- ON CYLINDER FF
- OPERATOR FAULT CLEAR
- CONTROLLER FAULT CLEAR
WRT FLT
HD SEL FLT
WRITE • RD FLT
ON CYL • (W+R) FLT
FAULT LATCH
WRITE
HD SEL
R•W
CR2
CR3
CR4
CR5
270
+5V
+ FAULT
+ HD SEL FAULT
+ (WRITE • READ FAULT)
+ [ON CYL • (W+R) FAULT]
- FAULT CLEAR
NORMANDALE DIVISION
FAULT LATCH AND FAULT CLEAR
LOC A2A04
19333
83322240
042
SHEET 2
PAGE 1-22

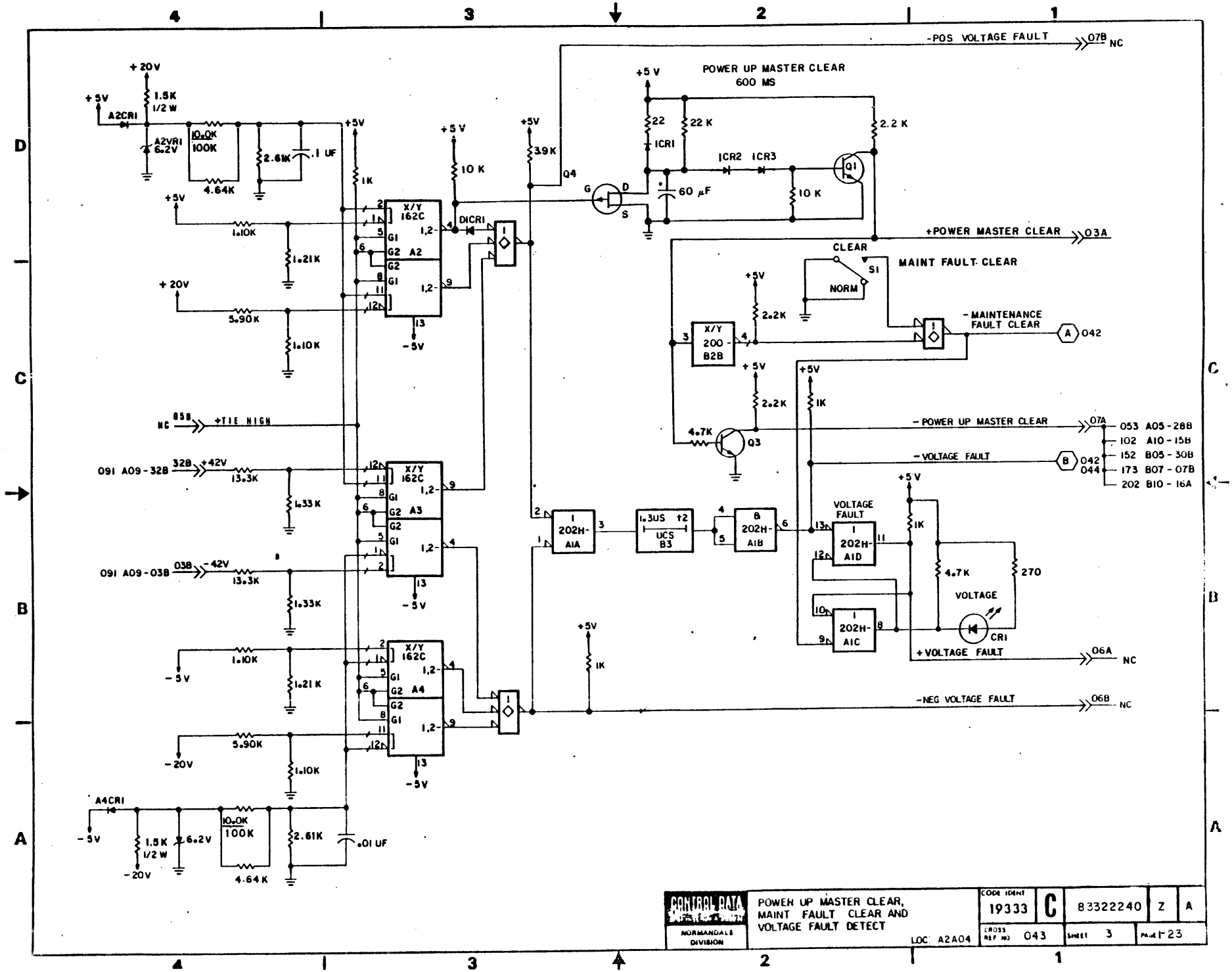

CONTROL DATA
NORMANDALE DIVISION

POWER UP MASTER CLEAR, MAINT FAULT CLEAR AND VOLTAGE FAULT DETECT

LOC: A2A04

CODE IDENT				
19333	C	83322240	Z	A
CROSS REF NO 043		SHEET 3	PAGE 1-23	

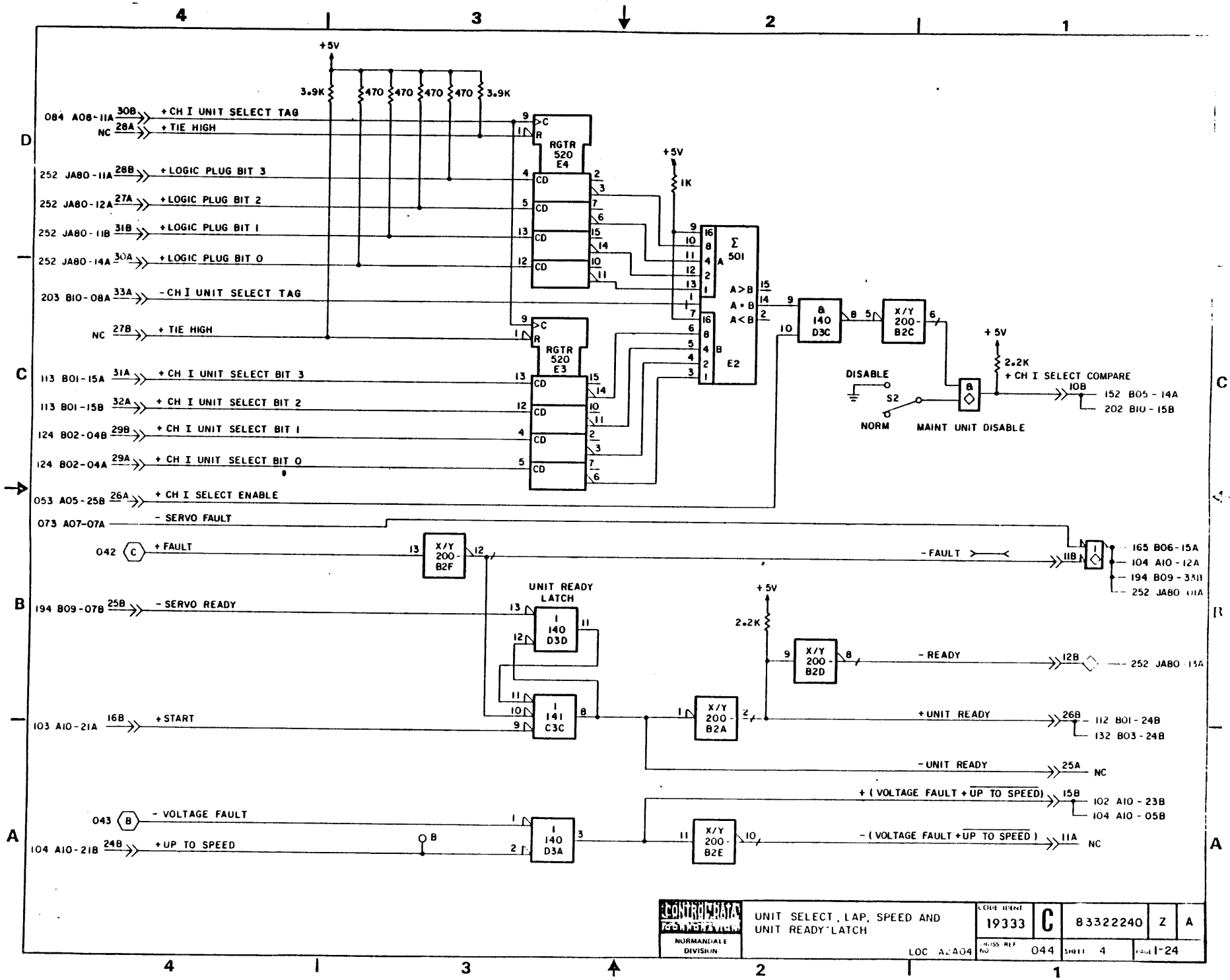
+5V
3.9K
470
470
470
470
3.9K
084 A08-11A 30B +CH I UNIT SELECT TAG
NC 28A +TIE HIGH
252 JA80-11A 28B +LOGIC PLUG BIT 3
252 JA80-12A 27A +LOGIC PLUG BIT 2
252 JA80-11B 31B +LOGIC PLUG BIT 1
252 JA80-14A 30A +LOGIC PLUG BIT 0
203 B10-08A 33A -CH I UNIT SELECT TAG
NC 27B +TIE HIGH
113 B01-15A 31A +CH I UNIT SELECT BIT 3
113 B01-15B 32A +CH I UNIT SELECT BIT 2
124 B02-04B 29B +CH I UNIT SELECT BIT 1
124 B02-04A 29A +CH I UNIT SELECT BIT 0
053 A05-25B 26A +CH I SELECT ENABLE
RGTR 520 E4
RGTR 520 E3
+5V
1K
Σ 501 E2
A>B
A=B
A<B
8 140 D3C
X/Y 200-B2C
+5V
2.2K
+CH I SELECT COMPARE
10B
152 B05-14A
202 B10-15B
DISABLE
S2
NORM
MAINT UNIT DISABLE
073 A07-07A -SERVO FAULT
042 C +FAULT
X/Y 200-B2F
-FAULT
11B
165 B06-15A
104 A10-12A
194 B09-33B
252 JA80-11A
UNIT READY LATCH
194 B09-07B 25B -SERVO READY
1 140 D3D
1 141 C3C
103 A10-21A 16B +START
+5V
2.2K
X/Y 200-B2D
-READY
12B
252 JA80-13A
X/Y 200-B2A
+UNIT READY
26B
112 B01-24B
132 B03-24B
-UNIT READY
25A
NC
043 B -VOLTAGE FAULT
104 A10-21B 24B +UP TO SPEED
1 140 D3A
+(VOLTAGE FAULT + UP TO SPEED)
15B
102 A10-23B
104 A10-05B
X/Y 200-B2E
-(VOLTAGE FAULT + UP TO SPEED)
11A
NC
CONTROL DATA
NORMANDALE DIVISION
UNIT SELECT, LAP, SPEED AND UNIT READY LATCH
LOC A2A04
CODE IDENT 19333
C
83322240
Z
A
ROSS REF NO 044
SHEET 4
PAGE 1-24

REVISION STATUS OF SHEETS

1	2	3	4	5	6	7	8	9	10	11	12	13	14	15	16	17	18	19	20
A	A	A																	
B	B	B																	
C	B	C																	

REVISIONS

REV.	ECO.	DESCRIPTION	DRFT	DATE	CHK'D
A	PE23900	RELEASED	MLA		
B	PE48402	CORRECT DIAGRAMS	WEB	12-16-76	
C		CORRECT SIGNAL NAME	MA	10-7-78	

NOTES:

1. TYPICAL CONFIGURATION FOR TERMINATORS AT-C2A, AT-C2B AND AT-B4A AS FOLLOWS:

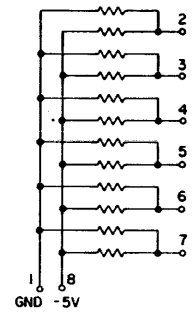

2. DELAY LINES ARE CONNECTED TO JUMPER BLOCK AS SHOWN IN DIAGRAM BELOW. ACTUAL DELAYS ARE SELECTED DURING MANUFACTURING. THIS DIAGRAM SHOWS TYPICAL CONNECTIONS. DELAY TIME FOR EACH DELAY LINE PIN RELATIVE TO PIN 6 INPUT IS SHOWN IN CHART BELOW.

PIN	DELAY TIMES (NS) B1	A2
5	5	10
4	10	20
3	15	30
2	20	40
1	25	50
13	30	60
12	35	70
11	40	80
10	45	90
9	50	100

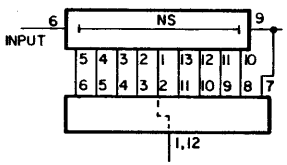

UNUSED LOGIC ELEMENTS

TYPE	LOCATION	OUTPUT PIN(S)
140	C1	3,6
164S	D2	8,9
10104	A3	2
10102	B2	9,15,14
10125	D3	12,13
10131	B3	14,15

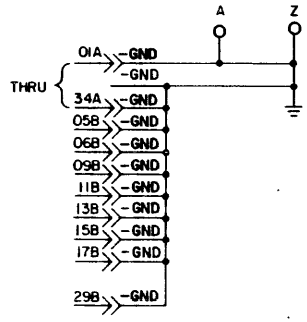

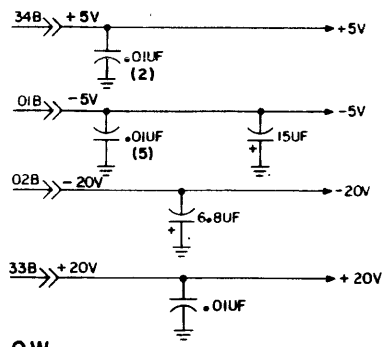

HLRV REV B AND BELOW.

DRAWN	M ANDERSON	CONTROL DATA NORMANDALE DIVISION	DATA LATCH DIAGRAMS	CODE IDENT 19333	C	83322240	Y G
CHECKED							
ENGINEER			TYPE HLRV - REV B LOC A2A05	CROSS REF NO 051	SHEET 1 OF 3	PAGE 1-25	
APPROVED							

REF 83214805

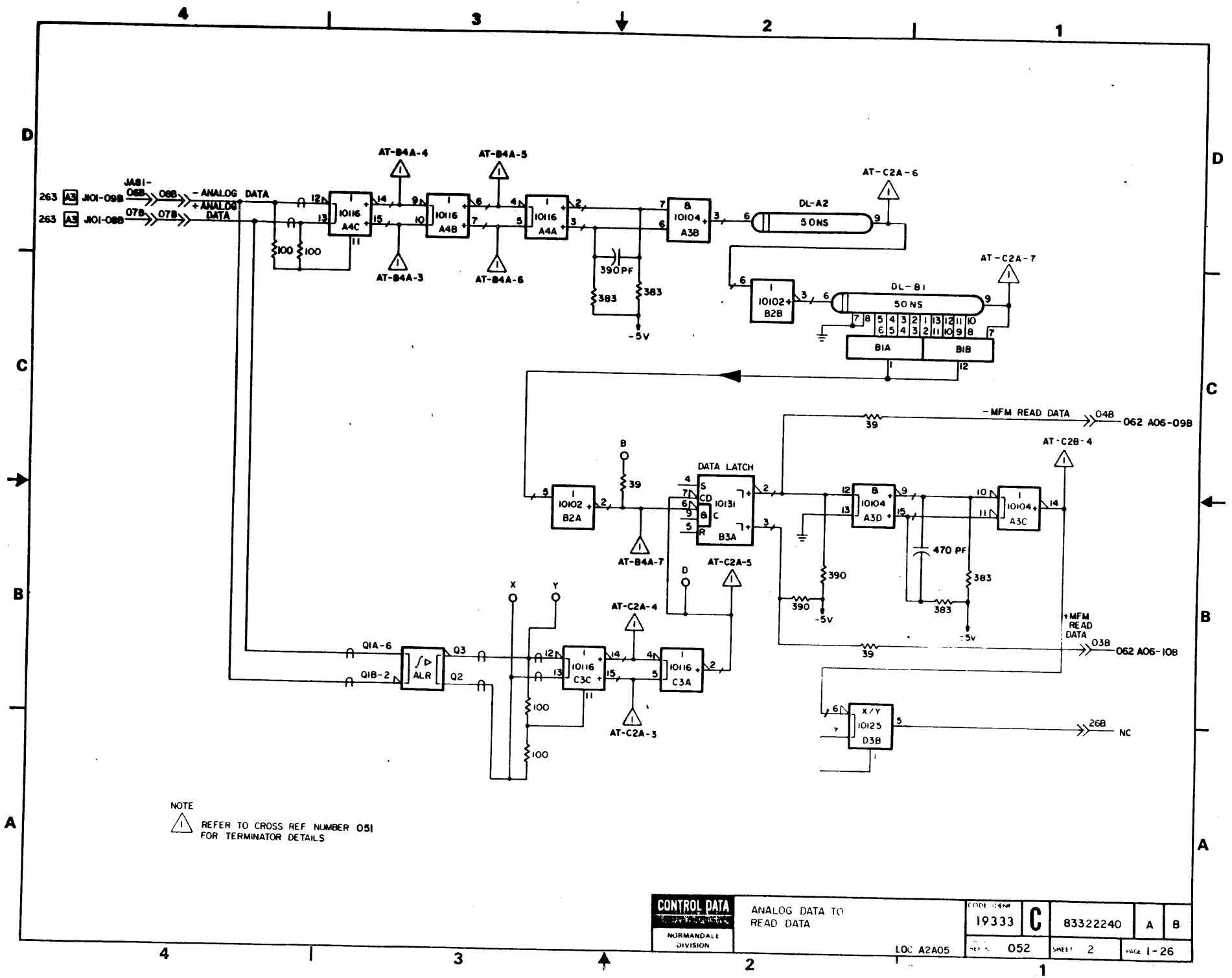
AT-B4A-4
AT-B4A-5
AT-C2A-6
AT-C2A-7
263 A3 J101-09B
263 A3 J101-07B
JA81-06B
JA81-07B
06B
07B
- ANALOG DATA
+ ANALOG DATA
10116 A4C
10116 A4B
10116 A4A
10104 A3B
DL-A2
50NS
10102 B2B
DL-B1
50NS
B1A
B1B
100
100
390PF
383
383
-5V
AT-B4A-3
AT-B4A-6
- MFM READ DATA
04B
062 A06-09B
AT-C2B-4
B
39
10102 B2A
DATA LATCH
10131 B3A
AT-B4A-7
AT-C2A-5
D
X
Y
AT-C2A-4
10104 A3D
10104 A3C
470 PF
390
390
383
383
-5V
-5V
+MFM READ DATA
03B
062 A06-10B
39
Q1A-6
Q1B-2
ALR
Q3
Q2
10116 C3C
10116 C3A
100
100
AT-C2A-3
X/Y 10125 D3B
26B
NC
NOTE
REFER TO CROSS REF NUMBER 051 FOR TERMINATOR DETAILS
CONTROL DATA
NORMANDALE DIVISION
ANALOG DATA TO READ DATA
LOC A2A05
CODE IDENT 19333
C
83322240
A
B
REV. 052
SHEET 2
PAGE 1-26

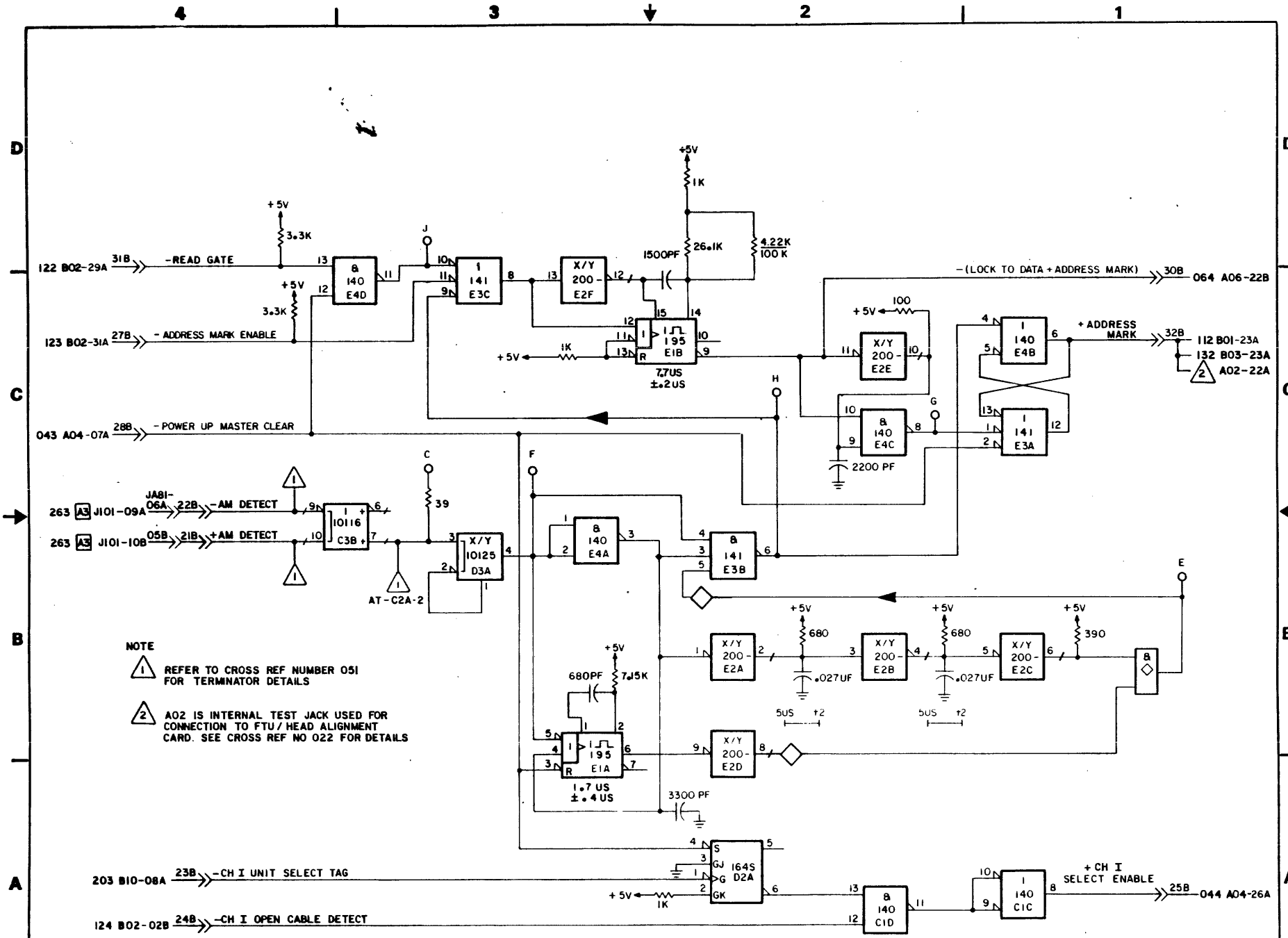
+5V
3.3K
122 B02-29A
31B
-READ GATE
123 B02-31A
27B
- ADDRESS MARK ENABLE
043 A04-07A
28B
- POWER UP MASTER CLEAR
8 140 E4D
1 141 E3C
X/Y 200- E2F
1K
26.1K
4.22K 100 K
1500PF
1 195 E1B
7.7US ±.2US
-(LOCK TO DATA + ADDRESS MARK)
30B
064 A06-22B
100
X/Y 200- E2E
1 140 E4B
+ ADDRESS MARK
32B
112 B01-23A
132 B03-23A
A02-22A
8 140 E4C
2200 PF
1 141 E3A
263 A3 J101-09A
JA81-06A
22B
-AM DETECT
263 A3 J101-10B
05B
21B
+AM DETECT
1 10116 C3B
AT-C2A-2
39
X/Y 10125 D3A
8 140 E4A
8 141 E3B
X/Y 200- E2A
680
.027UF
X/Y 200- E2B
X/Y 200- E2C
390
5US ±2
680PF
7.15K
1 195 E1A
1.7 US ±.4 US
X/Y 200- E2D
3300 PF
NOTE
1 REFER TO CROSS REF NUMBER 051 FOR TERMINATOR DETAILS
2 A02 IS INTERNAL TEST JACK USED FOR CONNECTION TO FTU/HEAD ALIGNMENT CARD. SEE CROSS REF NO 022 FOR DETAILS
203 B10-08A
23B
-CH I UNIT SELECT TAG
124 B02-02B
24B
-CH I OPEN CABLE DETECT
164S D2A
8 140 C1D
1 140 C1C
+CH I SELECT ENABLE
25B
044 A04-26A
CONTROL DATA
NORMANDALE DIVISION
LOCK TO DATA AND ADDRESS MARK DETECT
LOC A2A05
CODE IDENT 19333
C
83322240
H
C
CROSS REF NO 053
SHEET 3
PAGE 1-27/28

REVISION STATUS OF SHEETS

1	2	3	4	5	6	7	8	9	10	11	12	13	14	15	16	17	18	19	20
C	C	C																	
D	C	D																	
E	C	E																	
F		F																	
G	G																		

REVISIONS

REV	ECO	DESCRIPTION	DRFT	DATE	CHK'D
C	PE48543	HLRV IMPROVEMENT	MLA	1-31-78	
D	PE48675	ERR CORR	MLA	1-31-78	
E	PE48918	CHG DELAY	MLA	1-31-78	
F	PE22971	CORRECT SCHEMATICS	MJ	5-24-83	
G	DJ00159	CHG HEADER PINS	MJ	5-24-83	

NOTES

1. TYPICAL CONFIGURATION FOR TERMINATORS AT-C2A, AT-C2B AND AT-B4A AS FOLLOWS

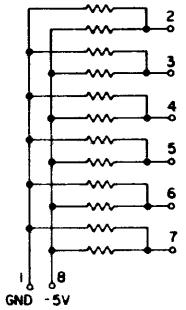

2. DELAY LINES ARE CONNECTED TO JUMPER BLOCK AS SHOWN IN DIAGRAM BELOW. ACTUAL DELAYS ARE SELECTED DURING MANUFACTURING. THIS DIAGRAM SHOWS TYPICAL CONNECTIONS. DELAY TIME FOR EACH DELAY LINE PIN RELATIVE TO PIN 6 INPUT IS SHOWN IN CHART BELOW.

PIN	DELAY TIMES (NS) B1	A2
5	5	10
4	10	20
3	15	30
2	20	40
1	25	50
13	30	60
12	35	70
11	40	80
10	45	90
9	50	100

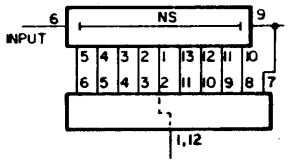

3. PINS 4, 5, 6 OF B1A AND PINS 7, 8, 9 OF B1B ARE ONLY INSTALLED WHEN REQUIRED.

UNUSED LOGIC ELEMENTS

TYPE	LOCATION	OUTPUT PIN(S)
195	A1	9, 10
164S	D2	8, 9
10104	A3	2
10102	B2	9, 15, 14
10125	D3	12, 13
10131	B3	14, 15
200	E2	2, 4, 6, 8

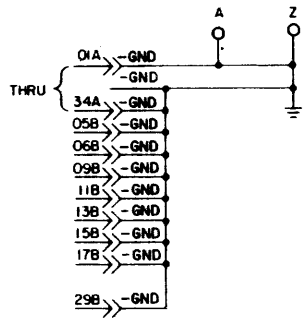

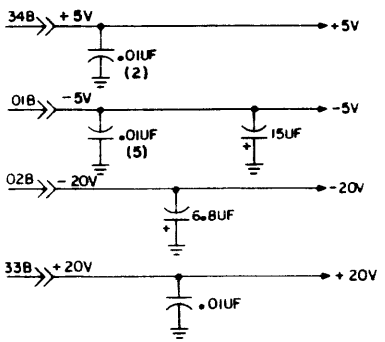

HLRV REV C AND ABOVE.

DRAWN	M ANDERSON	CONTROL DATA	DATA LATCH DIAGRAMS	CODE IDENT 19333	C	83322240	Y G
CHECKED							
ENGINEER		NORMANDALE DIVISION	TYPE HLRV-REV C LOC A2A05	CROSS REF NO 051	SHEET 1 OF 3	PAGE 1-28.1	
APPROVED				REF: 83214805			

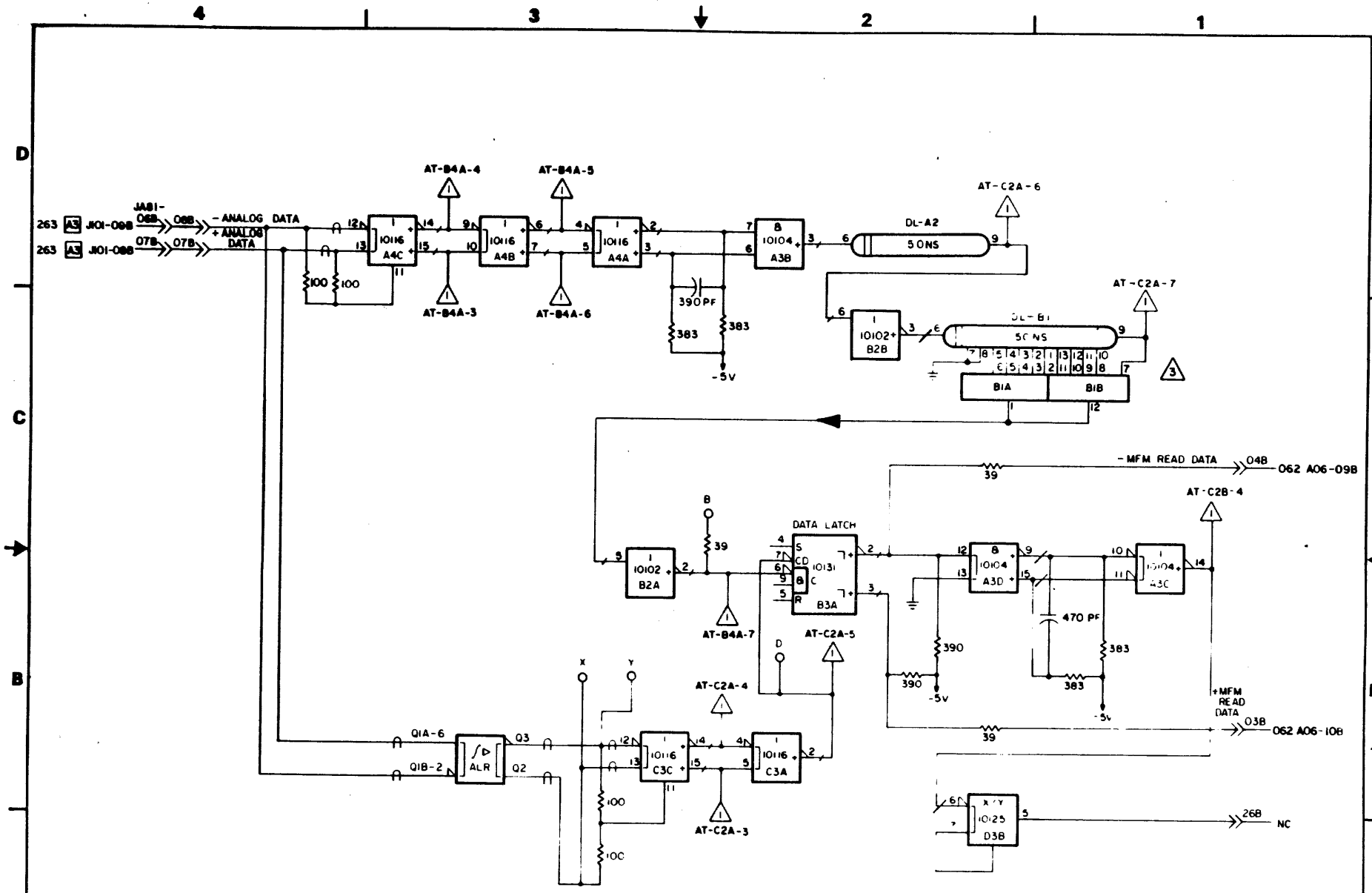

CONTROL DATA NORMANDALE DIVISION	ANALOG DATA TO READ DATA	19333	C	83322240	Y G
		052	SHEET 2		REV 1-28.2

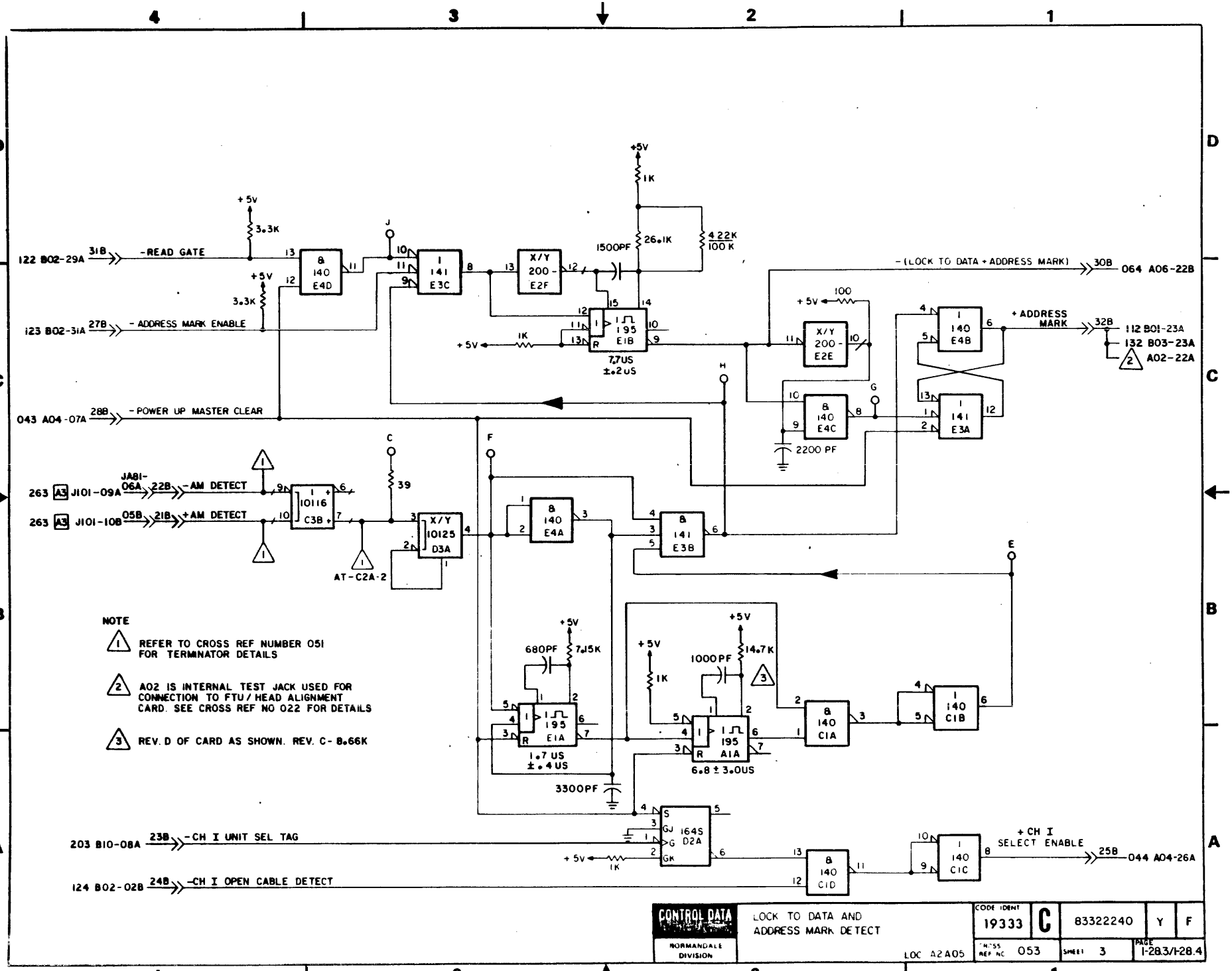
122 B02-29A 31B -READ GATE
123 B02-31A 27B - ADDRESS MARK ENABLE
043 A04-07A 28B - POWER UP MASTER CLEAR
263 A3 J101-09A JA81-06A 22B -AM DETECT
263 A3 J101-10B 05B 21B +AM DETECT
203 B10-08A 23B -CH I UNIT SEL TAG
124 B02-02B 24B -CH I OPEN CABLE DETECT
- (LOCK TO DATA + ADDRESS MARK) 30B 064 A06-22B
+ ADDRESS MARK 32B 112 B01-23A 132 B03-23A A02-22A
+ CH I SELECT ENABLE 25B 044 A04-26A
AT-C2A-2
7.7US ±.2US
1.7 US ±.4 US
6.8 ± 3.0US
3300PF
2200 PF
680PF
1000PF
NOTE
1 REFER TO CROSS REF NUMBER 051 FOR TERMINATOR DETAILS
2 A02 IS INTERNAL TEST JACK USED FOR CONNECTION TO FTU / HEAD ALIGNMENT CARD. SEE CROSS REF NO 022 FOR DETAILS
3 REV. D OF CARD AS SHOWN. REV. C- 8.66K
CONTROL DATA NORMANDALE DIVISION
LOCK TO DATA AND ADDRESS MARK DETECT
LOC A2A05
CODE IDENT 19333
C
83322240
Y
F
CROSS REF NO 053
SHEET 3
PAGE 1-28.3/1-28.4

REVISIONS					
REV	ECO	DESCRIPTION	DRFT	DATE	CHK'D
A	PE55112 PE23000	RELEASED CHG HLRV TO KLRV FOR BK5B6 A-D	[illegible]	[illegible]	[illegible]
B	PE57245	CORRECT DIAGRAMS	MJ	5-25-83	
C	DJE2000 DJ72000A	XFER FROM PE FORMAT CHANGE	M.R.	1-29-86	
D	DJ00788	ELIM RWK KLRV	M.R.	1-29-86	

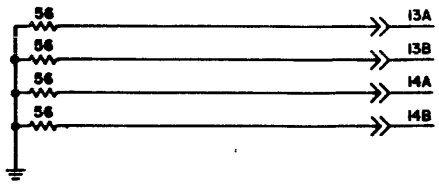

NOTES

1 TYPICAL CONFIGURATION FOR TERMINATORS AT-C2A, AT-C2B AND AT-B4A AS FOLLOWS

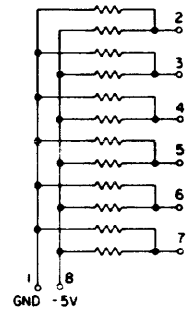

2 DELAY LINES ARE CONNECTED TO JUMPER BLOCK AS SHOWN IN DIAGRAM BELOW. ACTUAL DELAYS ARE SELECTED DURING MANUFACTURING. THIS DIAGRAM SHOWS TYPICAL CONNECTIONS. DELAY TIME FOR EACH DELAY LINE PIN RELATIVE TO PIN 6 INPUT IS SHOWN IN CHART BELOW.

PIN	DELAY TIMES (NS)	
	B1	A2
5	5	10
4	10	20
3	15	30
2	20	40
1	25	50
13	30	60
12	35	70
11	40	80
10	45	90
9	50	100

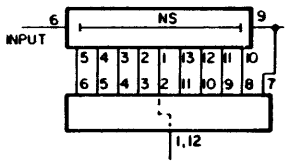

UNUSED LOGIC ELEMENTS

TYPE	LOCATION	OUTPUT PIN (S)
195	A1	10,9
164S	D2	8,9
10104	A3	2
10102	B2	9,15,14
10125	D3	12,13
10131	B3	14,15
200	E2	2,4,6,8

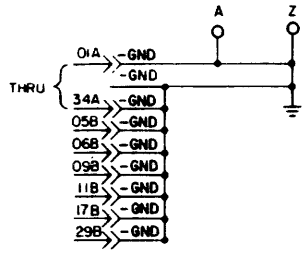

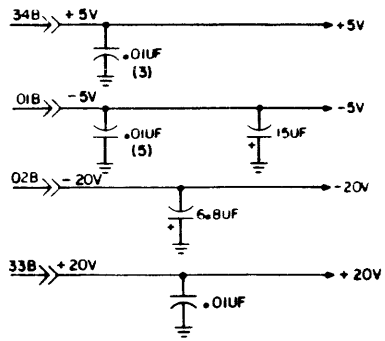

THIS SET USED FOR BK5B6A-D

DRAWN	M ANDERSON	3 1 71	CONTROL DATA TWIN CITIES DISK DIVISION	DATA LATCH DIAGRAMS	CODE IDENT 19333	C	83322240 AA D
CHECKED							
ENGINEER	R DARWIN	3 8 78		TYPE KLRV LOC A2A05	CROSS REF NO. 051	SHEET 1 OF 3	PAGE 1-28.5
APPROVED							

REF 83214853

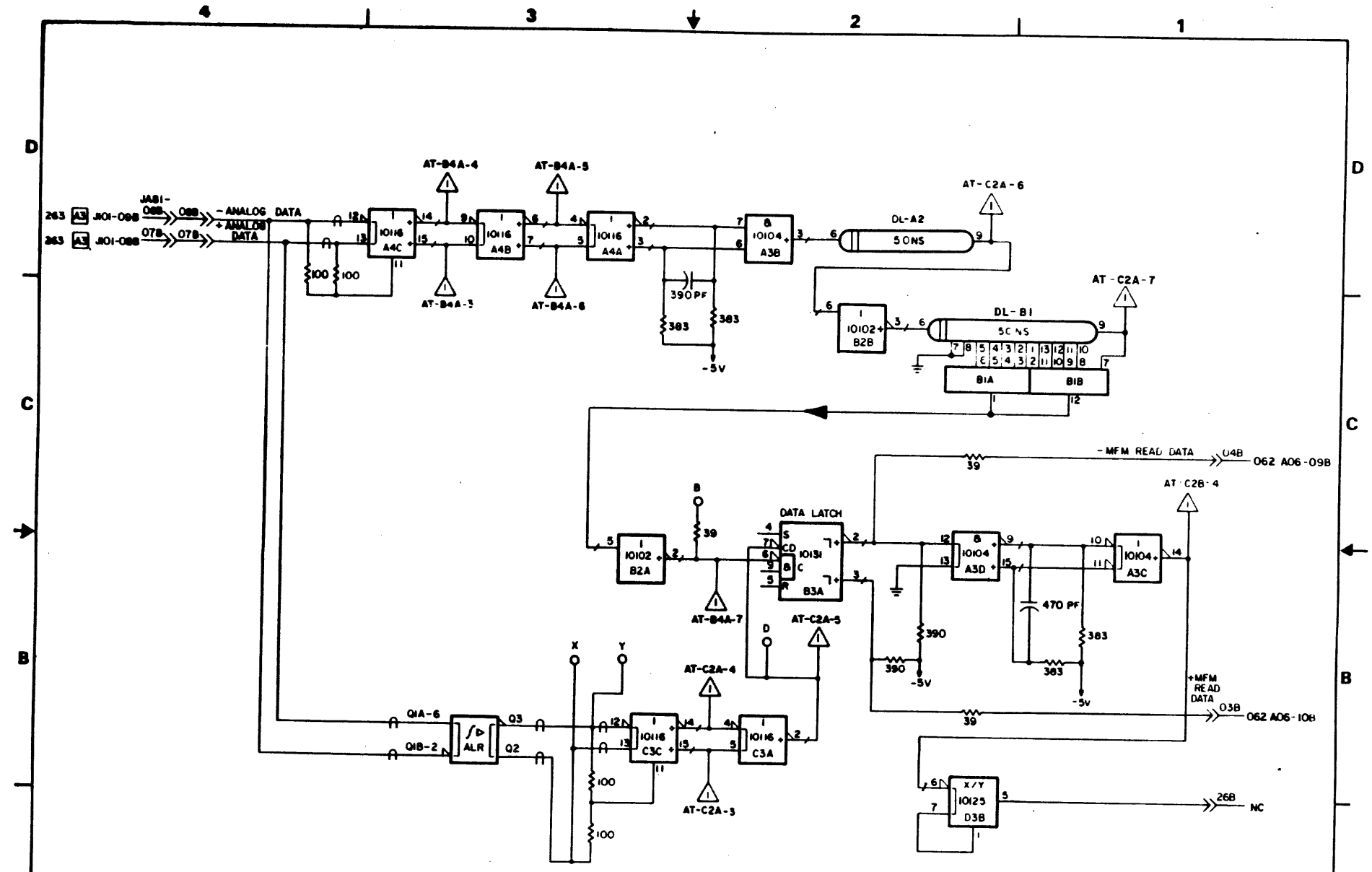

CONTROL DATA NORMANDALE DIVISION	ANALOG DATA TO READ DATA	LOC A2A05	CODE IDENT 19333	C	83322240 G A
			CROSS REF NO. 052	SHEET 2	PAGE 1-28.6

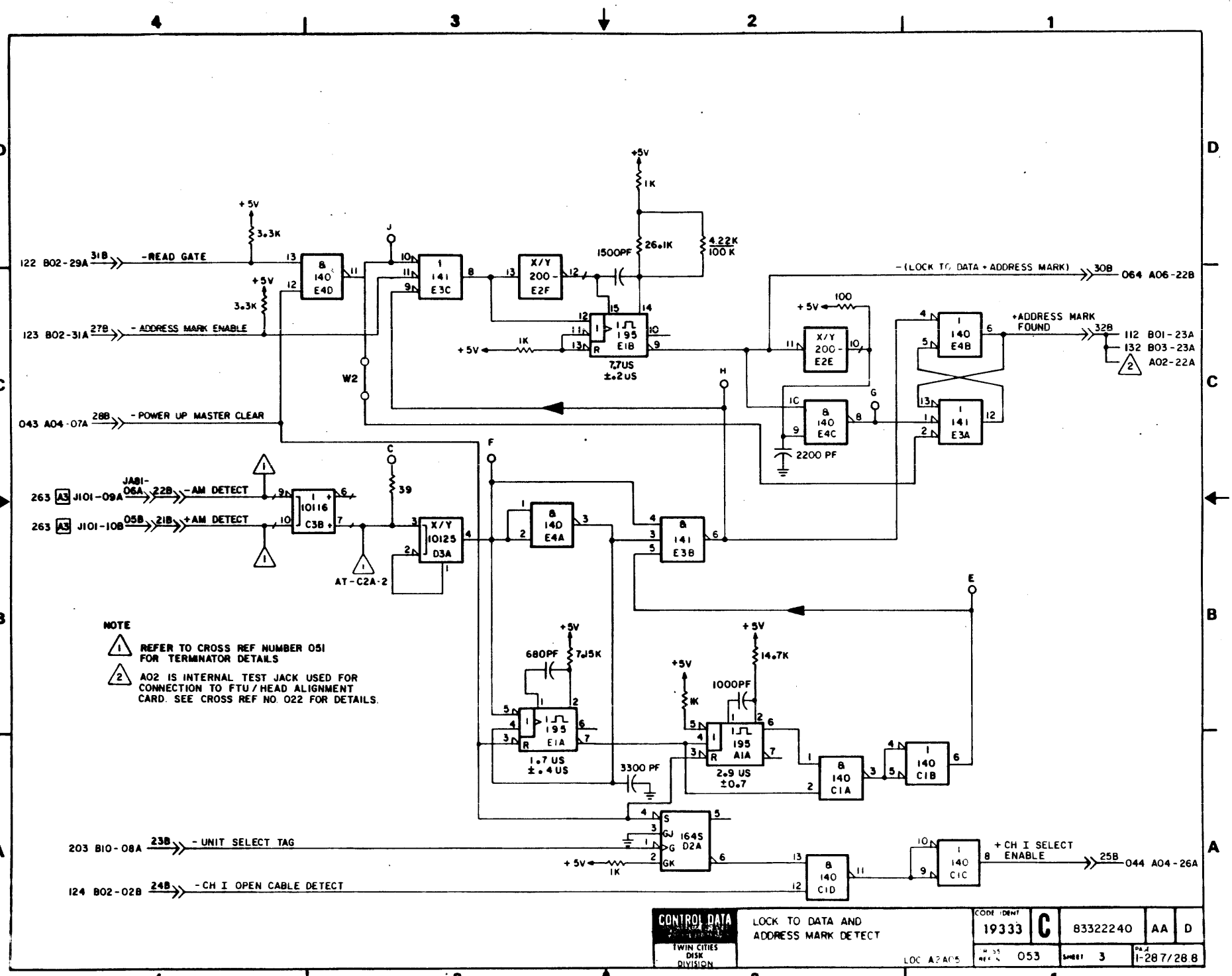
122 B02-29A 31B -READ GATE
123 B02-31A 27B - ADDRESS MARK ENABLE
043 A04-07A 28B - POWER UP MASTER CLEAR
263 A3 J101-09A JA81-06A 22B -AM DETECT
263 A3 J101-10B 05B 21B +AM DETECT
203 B10-08A 23B - UNIT SELECT TAG
124 B02-02B 24B -CH I OPEN CABLE DETECT
-(LOCK TO DATA + ADDRESS MARK) 30B 064 A06-22B
+ADDRESS MARK FOUND 32B 112 B01-23A 132 B03-23A A02-22A
+CH I SELECT ENABLE 25B 044 A04-26A
+5V
3.3K
1K
26.1K
4.22K 100 K
1500PF
100
2200 PF
39
680PF
7.15K
14.7K
1000PF
3300 PF
7.7US ±.2US
1.7 US ±.4 US
2.9 US ±0.7
W2
AT-C2A-2
NOTE
1 REFER TO CROSS REF NUMBER 051 FOR TERMINATOR DETAILS
2 A02 IS INTERNAL TEST JACK USED FOR CONNECTION TO FTU / HEAD ALIGNMENT CARD. SEE CROSS REF NO. 022 FOR DETAILS.
CONTROL DATA
TWIN CITIES DISK DIVISION
LOCK TO DATA AND ADDRESS MARK DETECT
LOC A2A05
CODE IDENT 19333
C
83322240
AA
D
053
SHEET 3
PAGE 1-28.7/28.8

REVISION STATUS OF SHEETS

1	2	3	4	5	6	7	8	9	10	11	12	13	14	15	16	17	18	19	20
A	A	A	A	A															
B	B	B	B	B															
C	C	B	B	B															
D	C	D	B	B															
E	C	E	B	B															
F	F		F																
G	G		G																
H	H	H	H	H															
J		J																	

REVISIONS

REV	ECO	DESCRIPTION	DRFT	DATE	CHK'D
A	PE23000	RELEASED	MLA		
B	PE48402	CORRECT DIAGRAMS	GR	12-16-76	
C	PE55604	CORRECT DIAGRAM	TH	7-26-79	
D	PE55862	BIAS ADJUSTMENT	MF	7-13-81	
E	PE60250	IMPROVE YIELD	MF	7-13-81	
F	DJ00011	CORRECT DIA'S	MF	7-13-81	
G	DJ00011A	LOGIC DIA ERRORS	MJ	5-25-83	
H	DJ22000	XFER FROM PE	MJ	5-25-83	
J	DJ00439	BD BLANK CHG BLZV	MJ	5-25-83	

NOTES:

1 TYPICAL CONFIGURATION FOR TERMINATORS ATA3, ATB2, ATB3, ATB4, ATC3, ATD4, ATE2 AS FOLLOWS

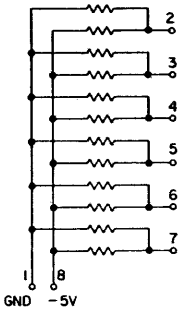

NOTE 2 SEE LOWER LEFT CORNER

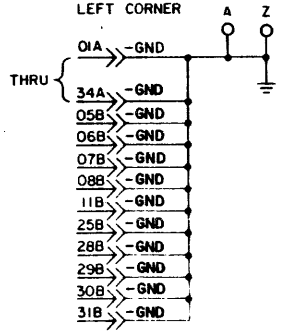

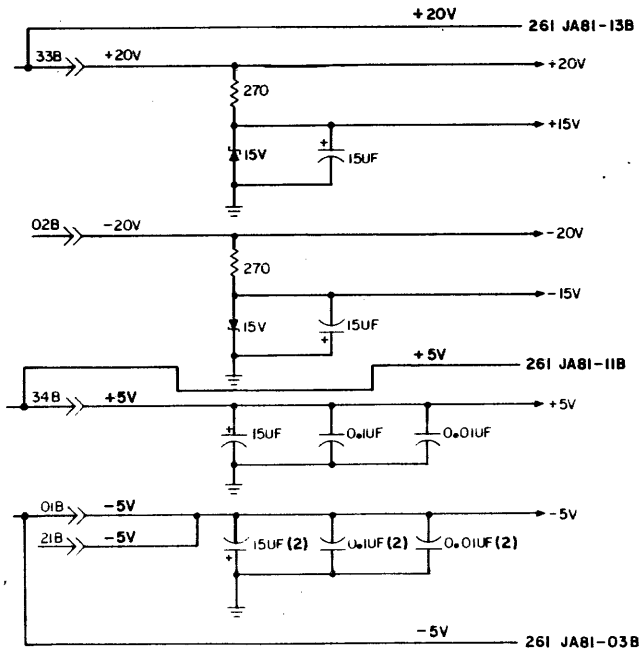

UNUSED LOGIC ELEMENTS

TYPE	LOCATION	OUTPUT PIN (S)
10131	E4	2,3
10116	E1	14,15
10116	C3	2,3,14,15
10125	D4	4,5

2 DELAY LINES ARE CONNECTED TO JUMPER BLOCK AS SHOWN IN DIAGRAM BELOW. ACTUAL DELAYS ARE SELECTED DURING MANUFACTURING. THIS DIAGRAM SHOWS TYPICAL CONNECTIONS. DELAY TIME FOR EACH DELAY LINE PIN RELATIVE TO PIN 6 INPUT IS SHOWN IN CHART BELOW.

PIN	DELAY TIMES (NS) B1	A2
5	5	10
4	10	20
3	15	30
2	20	40
1	25	50
13	30	60
12	35	70
11	40	80
10	45	90
9	50	100

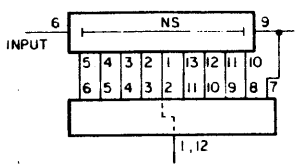

DRAWN	M ANDERSON	CONTROL DATA CORPORATION	READ PCB DIAGRAMS	CODE IDENT 19333	C	83322240	Y J
CHECKED		NORMANDALE DIVISION					
ENGINEER		TYPE BLZV	LOC A2A06	061	SHT 1 OF 5	PAGE 1-29	
APPR							

REF 83214806

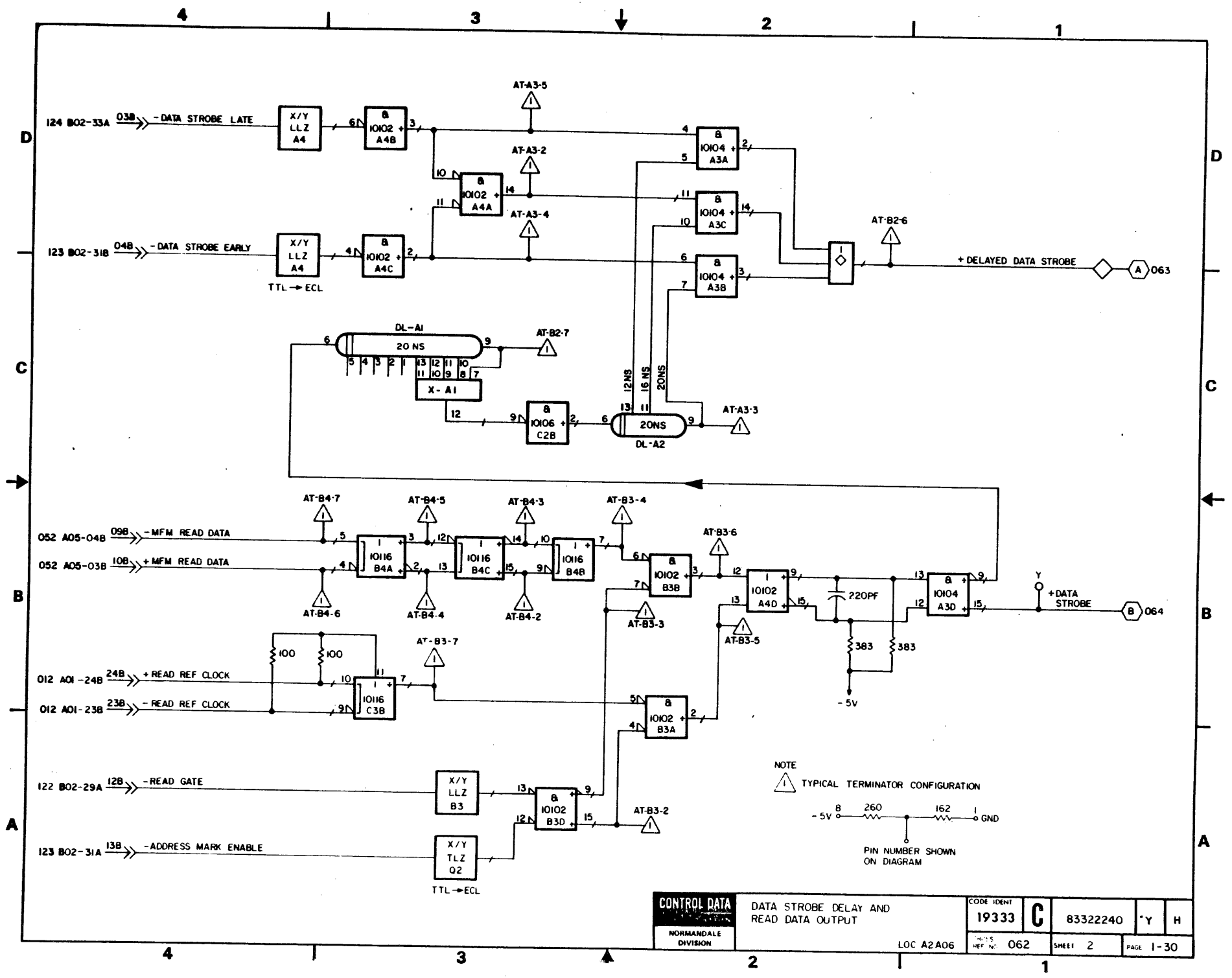
124 B02-33A
03B
-DATA STROBE LATE
X/Y LLZ A4
10102 A4B
AT-A3-5
AT-A3-2
10102 A4A
AT-A3-4
123 B02-31B
04B
-DATA STROBE EARLY
X/Y LLZ A4
TTL → ECL
10102 A4C
10104 A3A
10104 A3C
10104 A3B
AT-B2-6
+DELAYED DATA STROBE
A 063
DL-A1
20 NS
AT-B2-7
X-A1
10106 C2B
12NS
16 NS
20NS
20ONS
DL-A2
AT-A3-3
052 A05-04B
09B
-MFM READ DATA
052 A05-03B
10B
+MFM READ DATA
10116 B4A
10116 B4C
10116 B4B
AT-B4-7
AT-B4-5
AT-B4-3
AT-B3-4
AT-B4-6
AT-B4-4
AT-B4-2
10102 B3B
AT-B3-6
AT-B3-3
AT-B3-5
10102 A4D
10104 A3D
220PF
383
383
-5V
Y
+DATA STROBE
B 064
012 A01-24B
24B
+READ REF CLOCK
012 A01-23B
23B
-READ REF CLOCK
100
100
10116 C3B
AT-B3-7
10102 B3A
NOTE
TYPICAL TERMINATOR CONFIGURATION
-5V
8
260
162
1
GND
PIN NUMBER SHOWN ON DIAGRAM
122 B02-29A
12B
-READ GATE
X/Y LLZ B3
10102 B3D
AT-B3-2
123 B02-31A
13B
-ADDRESS MARK ENABLE
X/Y TLZ Q2
TTL → ECL
CONTROL DATA
NORMANDALE DIVISION
DATA STROBE DELAY AND READ DATA OUTPUT
LOC A2A06
CODE IDENT 19333
C
83322240
Y
H
DRAWING REF NO. 062
SHEET 2
PAGE 1-30

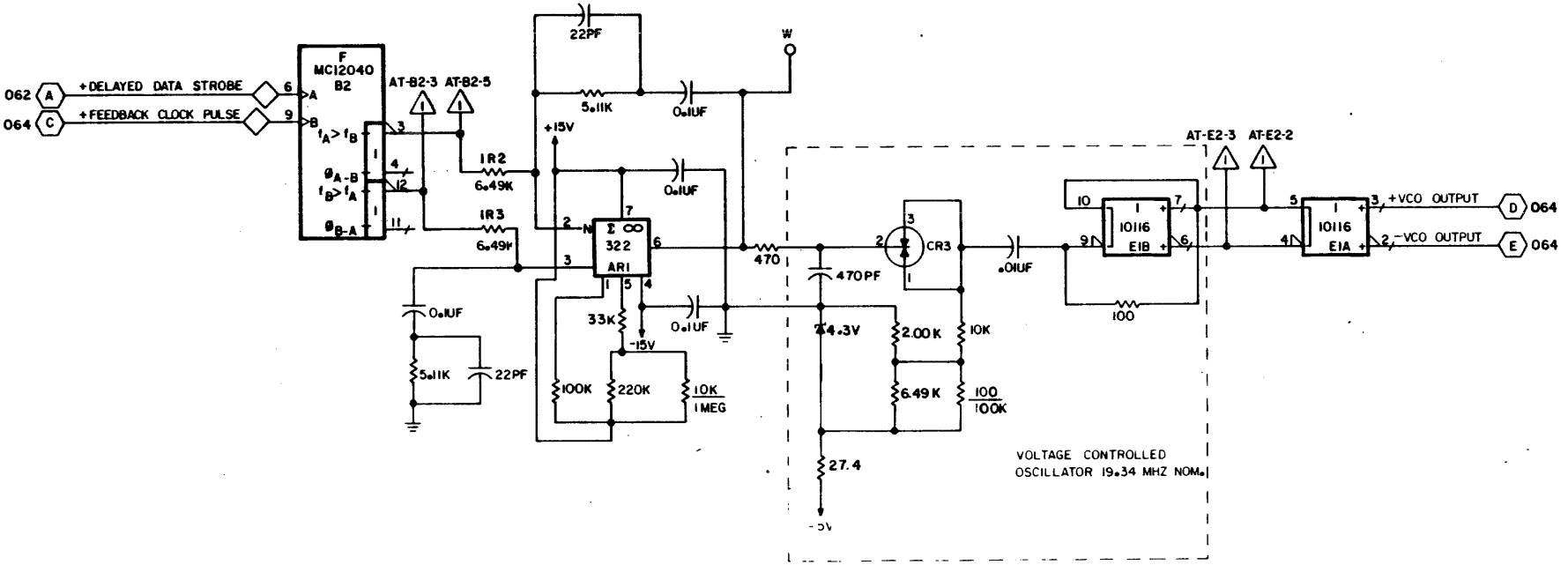

NOTE

1 TYPICAL TERMINATOR CONFIGURATION

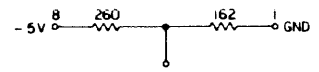

PIN NUMBER SHOWN ON DIAGRAM

CONTROL DATA CORPORATION NORMANDALE DIVISION	VCO OUTPUT		CODE IDENT 19333	C	83322240	Y J
		LOC A2A06	REV 063	SHEET 3	PAGE 1-31	

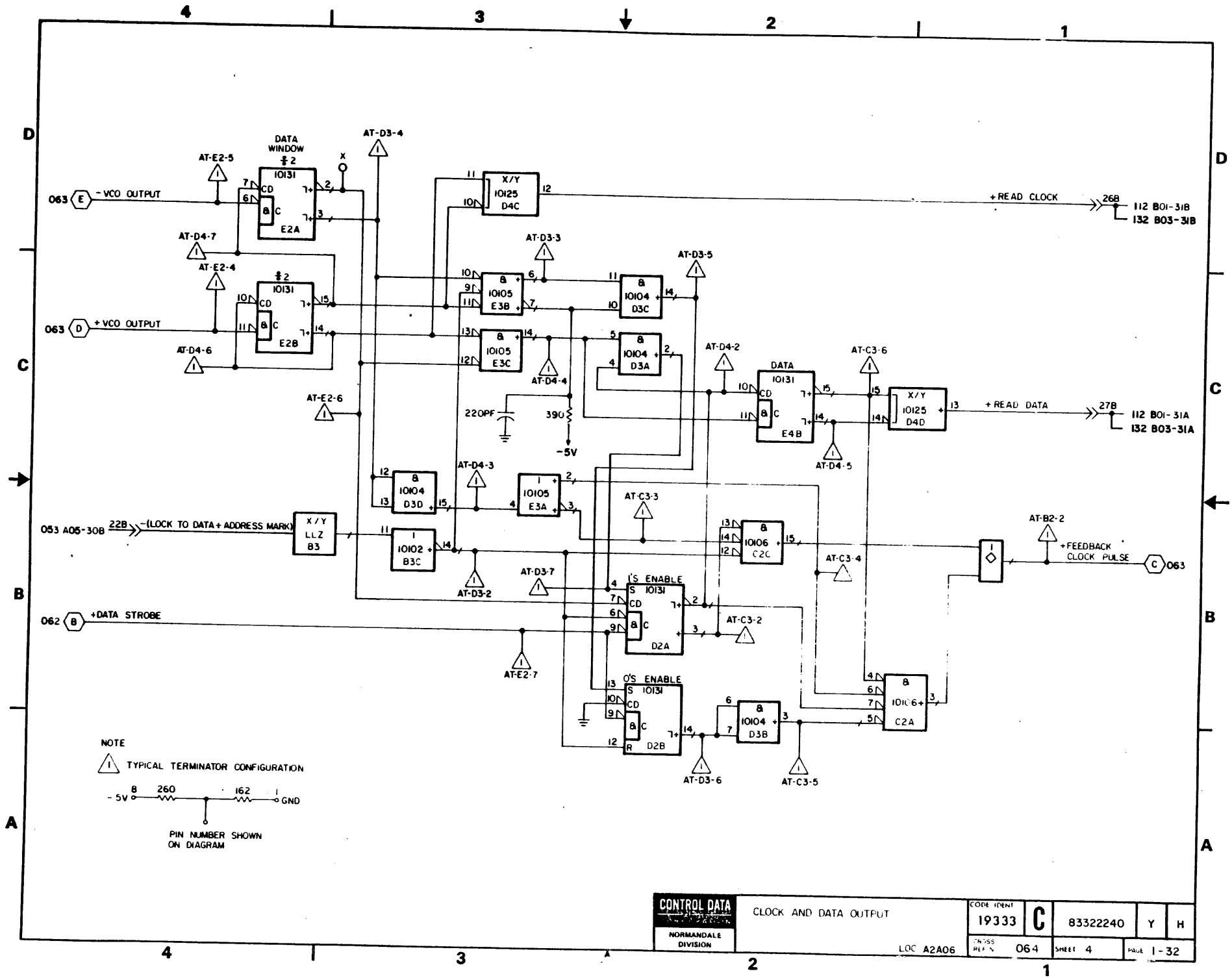

CONTROL DATA NORMANDALE DIVISION	CLOCK AND DATA OUTPUT LOC A2A06	CODE IDENT 19333	C	83322240	Y H
		CROSS REF'S 064	SHEET 4	PAGE 1-32	

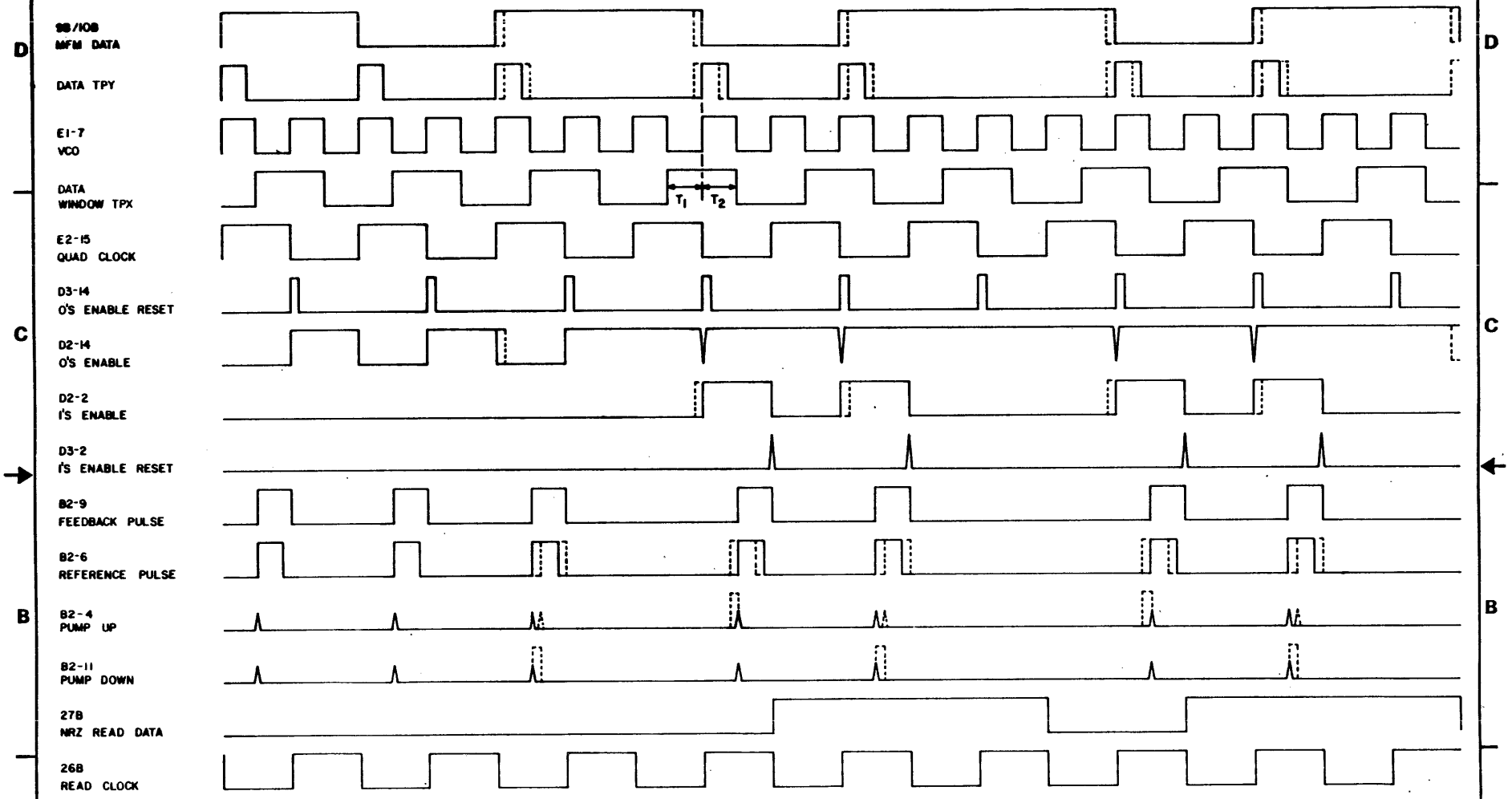

NOTE

1. DASHED LINES INDICATE PEAK SHIFTED DATA
2. $T_1 \approx T_2 \simeq 25$NS WHEN STROBE PULSE IS CENTERED IN WINDOW $(T_1 + T_2)$
3. $T_{RISE} = T_{FALL} \simeq 3$NS

CONTROL DATA NORMANDALE DIVISION	READ PLO TIMING DIAGRAM		CODE IDENT 19333	C	83322240	Y H
	LOC A2A06		065	SHEET 5	PAGE 1-33/34	

REVISION STATUS OF SHEETS

1	2	3	4	5	6	7	8	9	10	11	12	13	14	15	16	17	18	19	20
A	A	A																	
B	A	B																	
C	C	C																	
D	D	D																	
E	D	E																	
F	F	E																	
G	G	E																	
H	H	E																	
J	J	E																	
K	K	H																	
L																			
M	M	M																	
N	N																		

REVISIONS

REV.	ECO.	DESCRIPTION	DRFT.	DATE	CHK'D
A	PE23000	RELEASED	GR		
B	PE48296	CORRECT DIAGRAMS	WEB		
C	PE48402	CORR DIA			
D	PE48523	CORR DIA	DM	7-26-77	
E	PE48675	ERR CORR	DM	1-25-78	
F	PE55792	CLARIFY DIAGRAM	A A O	6 15 78	
G	PE60401	CHG DIODE	MF	7-13-81	
H	DJ00038	DELETE TEST POINTS	MJ	1-11-82	[illegible]
J	DJ00076	CHG RESISTOR	MJ	1-11-82	[illegible]
K	DJ00075	PREVENT RINGING SERVO	MJ	1-11-82	[illegible]
L	DJ00075A	FILTER FREQ CHG	MJ	5-25-83	
M	DJ22000	XFER FROM PE	MJ	5-25-83	
N	DJ00315A	NLQV YIELD CHG	MJ	5-25-83	

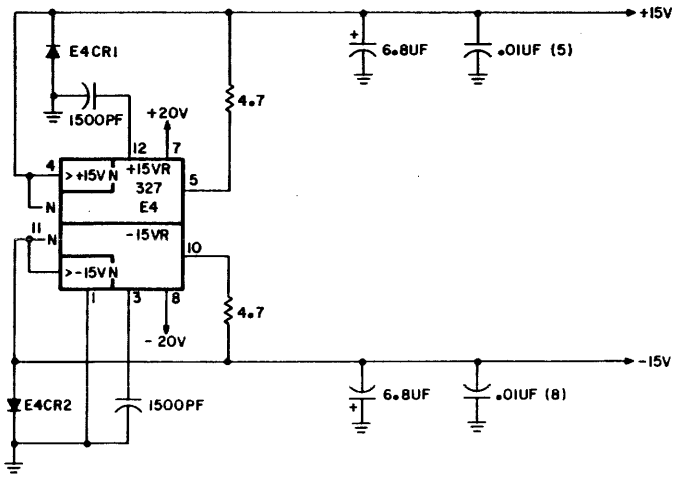

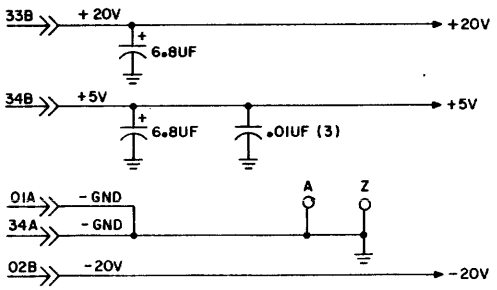

THIS SET USED FOR NLQV REV D & BELOW (BK5XX=9762)

DRAWN	G RABINE	8/26/76	CONTROL DATA CORPORATION	D/A FUNCTION GENERATOR DIAGRAMS	CODE IDENT 19333	C	83322240 Z N
CHECKED							
ENGINEER	[illegible]	9/23/76	NORMANDALE DIVISION	TYPE JLQV/NLQV LOC A2A07	CROSS REF NO 071	SHEET 1 OF 3	PAGE 1-35
APPROVED							

REF 83214807

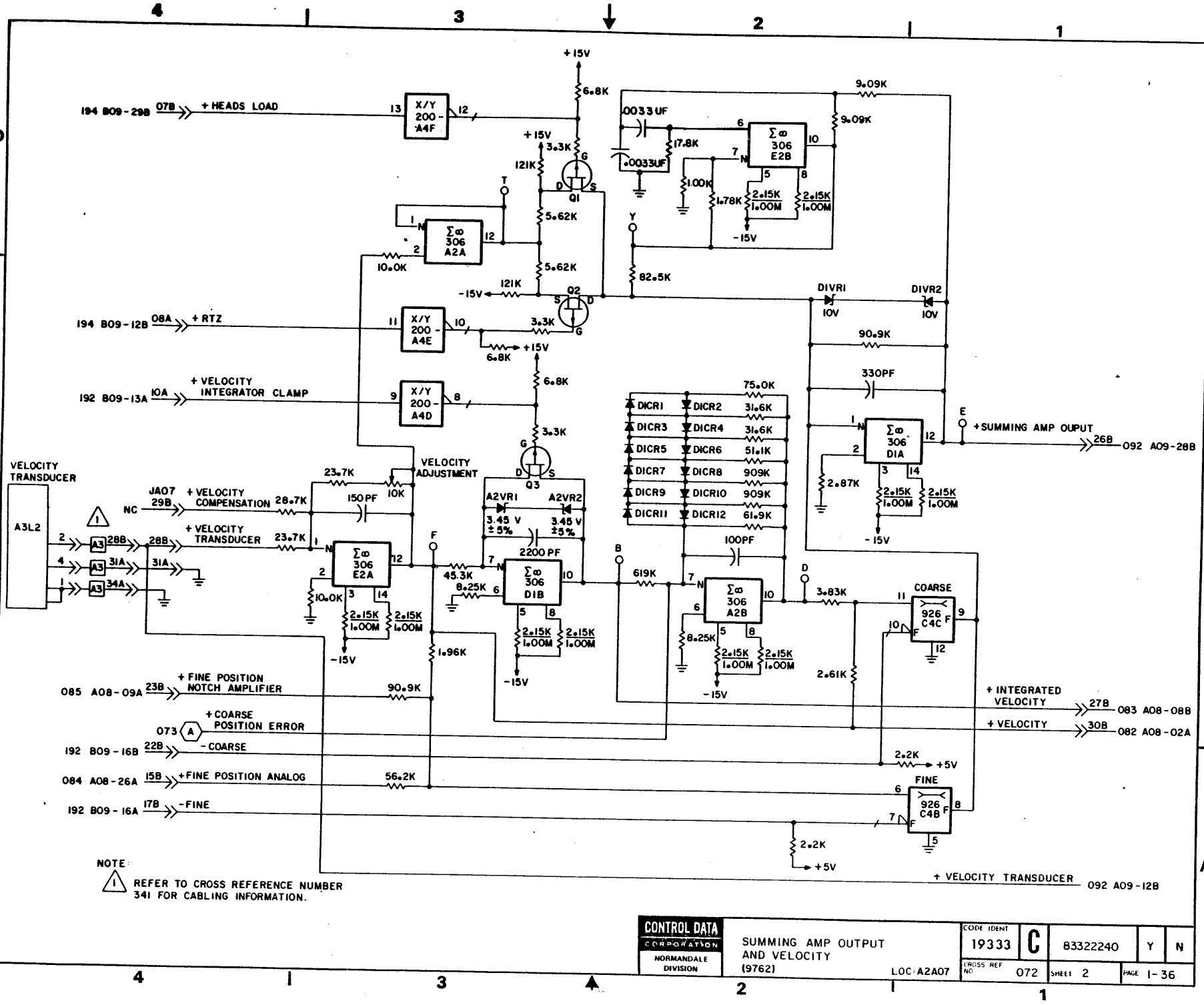

CONTROL DATA CORPORATION
NORMANDALE DIVISION

SUMMING AMP OUTPUT AND VELOCITY (9762)

LOC: A2A07

CODE IDENT				
19333	C	83322240	Y	N
CROSS REF NO 072	SHEET 2	PAGE 1-36		

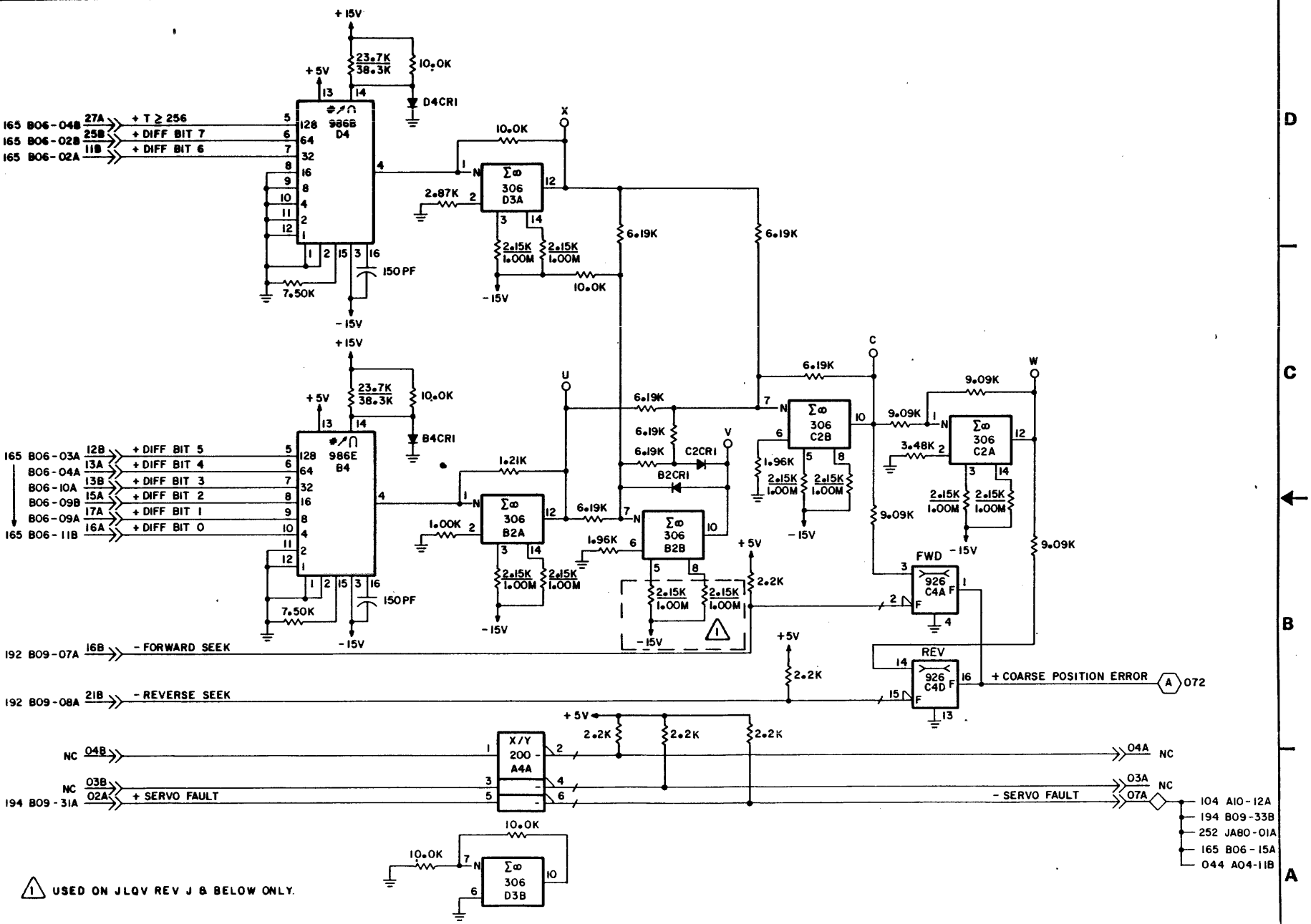

CONTROL DATA CORPORATION NORMANDALE DIVISION	SEEK DIFFERENCE GENERATION (9762) LOC A2A07	CODE IDENT 19333	C	83322240	Y	M
		CROSS REF NO 073		SHEET 3	PAGE 1-37/38	

REVISIONS					
REV.	ECO.	DESCRIPTION	DRFT.	DATE	CHK'D
A	PE23000	RELEASED	GR	10/1/76	[illegible]
B	PE48296	ERR. CORR.	MA	11-17-76	[illegible]
C	PE48402	ERROR CORRECTIONS	VG	1-5-77	[illegible]
D	PE48523	ERROR CORRECTION	SB	4-6-77	[illegible]
E	PE48675	ERROR CORRECTION	DM	7-6-77	[illegible]
F	PE55792	CORRECT DIAG'S	TH	7-9-79	[illegible]
G	PE60401	CHG DIODE ON SLQV	MF	1-10-81	[illegible]
H	DJ00038	DELETE TEST POSTS	MF	7-7-81	DGD
J	DJ00076	CHG RESISTOR JLQV	DLM	9-11-81	DGD
K	DJ00075	FILTER FREQ CHG	DLM	9-11-81	DGD
L	DJ00075A	TO ADD NIXDORF KIT PL, TO CORRECT PN'S, CHG RWK EFFECTIVITY, AND ADD LD'S.	DLM	9-11-81	DGD
M	DJ22000	XFER FROM PE	GL	7-19-82	[illegible]
N	DJ00315	NLQV YIELD CHG	MJ	7-23-82	DGD
P	DJ00420	IMPROVE YIELD	KKB	11-1-82	DGD
R	DJ00734 DJ72000A	CHG. NLQV COMP AY FORMAT CHANGE	MR	1-29-85	

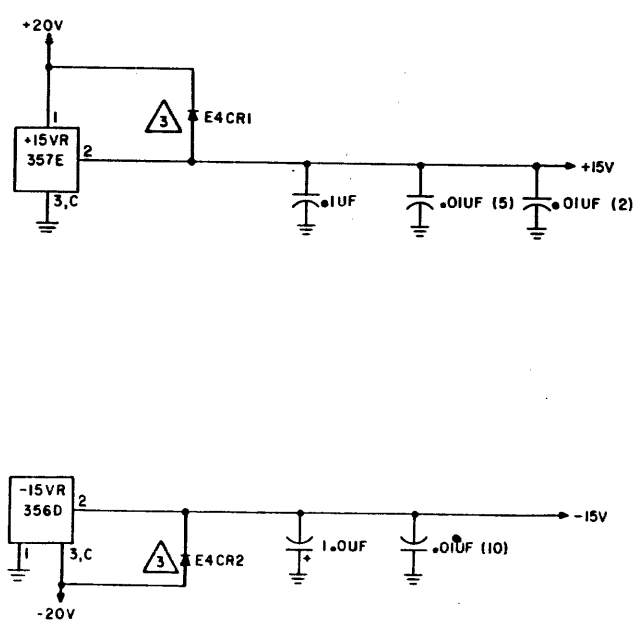

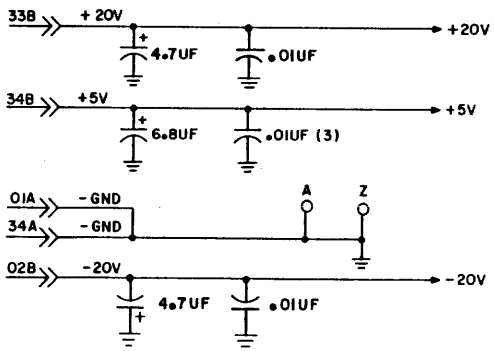

3 DIODE SILICON, 1N4001, 95637301.

4 DIODE SILICON, 24553500.

THIS SET USED FOR NLQV REV E & ABOVE BK5XX = 9762-E

DRAWN	G RABINE	8/26/76	CONTROL DATA CORPORATION TWIN CITIES DISK DIVISION	D/A FUNCTION GENERATOR DIAGRAMS	CODE IDENT 19333	C	83322240	AA	R
CHECKED									
ENGINEER	[illegible]	9/23/76							
APPROVED				TYPE NLQV LOC A2A07	CROSS REF NO 071	SHEET 1 OF 3	PAGE 1-38.1		

REF 83214807

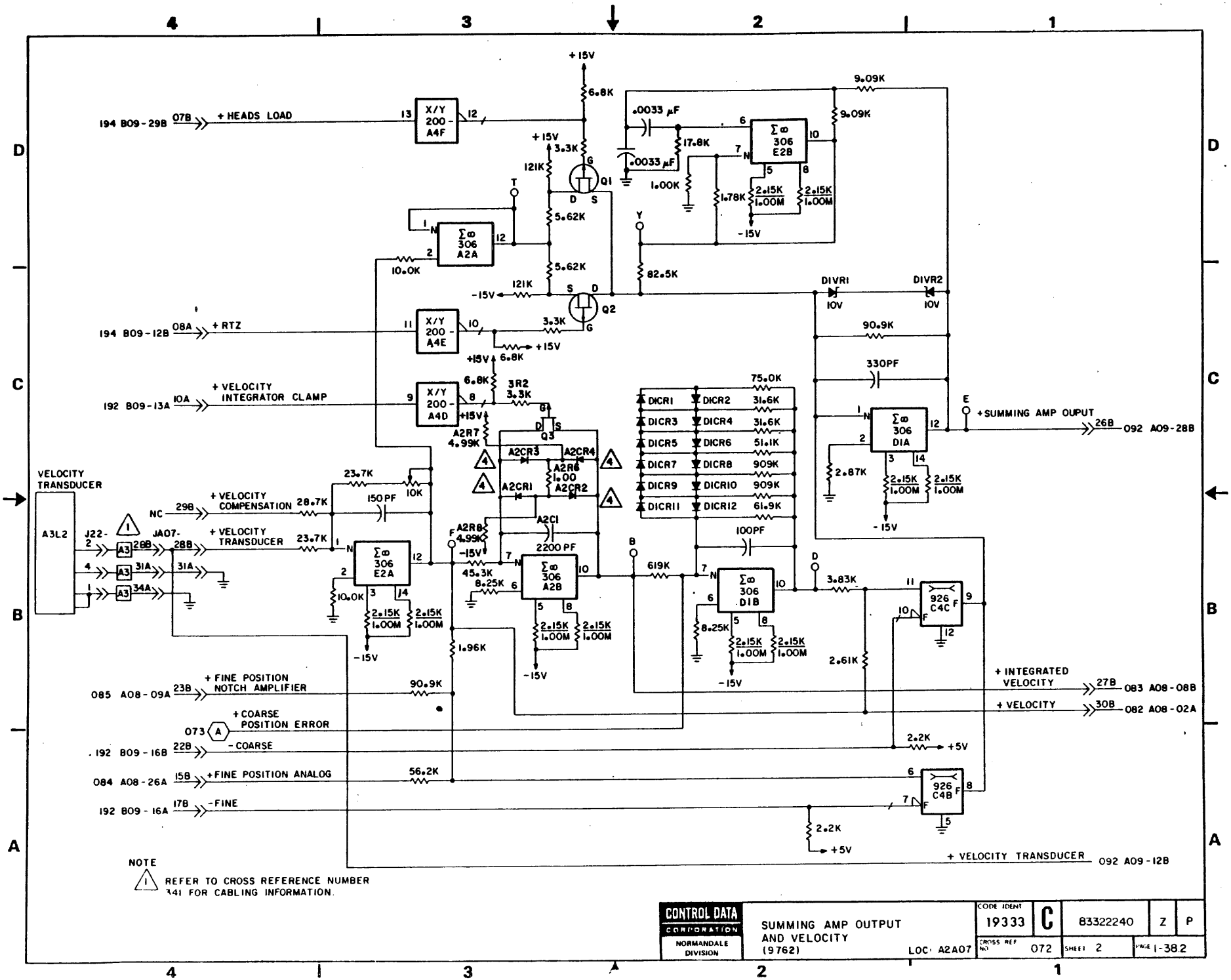

CONTROL DATA CORPORATION NORMANDALE DIVISION	SUMMING AMP OUTPUT AND VELOCITY (9762) LOC: A2A07	CODE IDENT 19333	C	83322240	Z	P
		CROSS REF NO. 072	SHEET 2	PAGE 1-382		

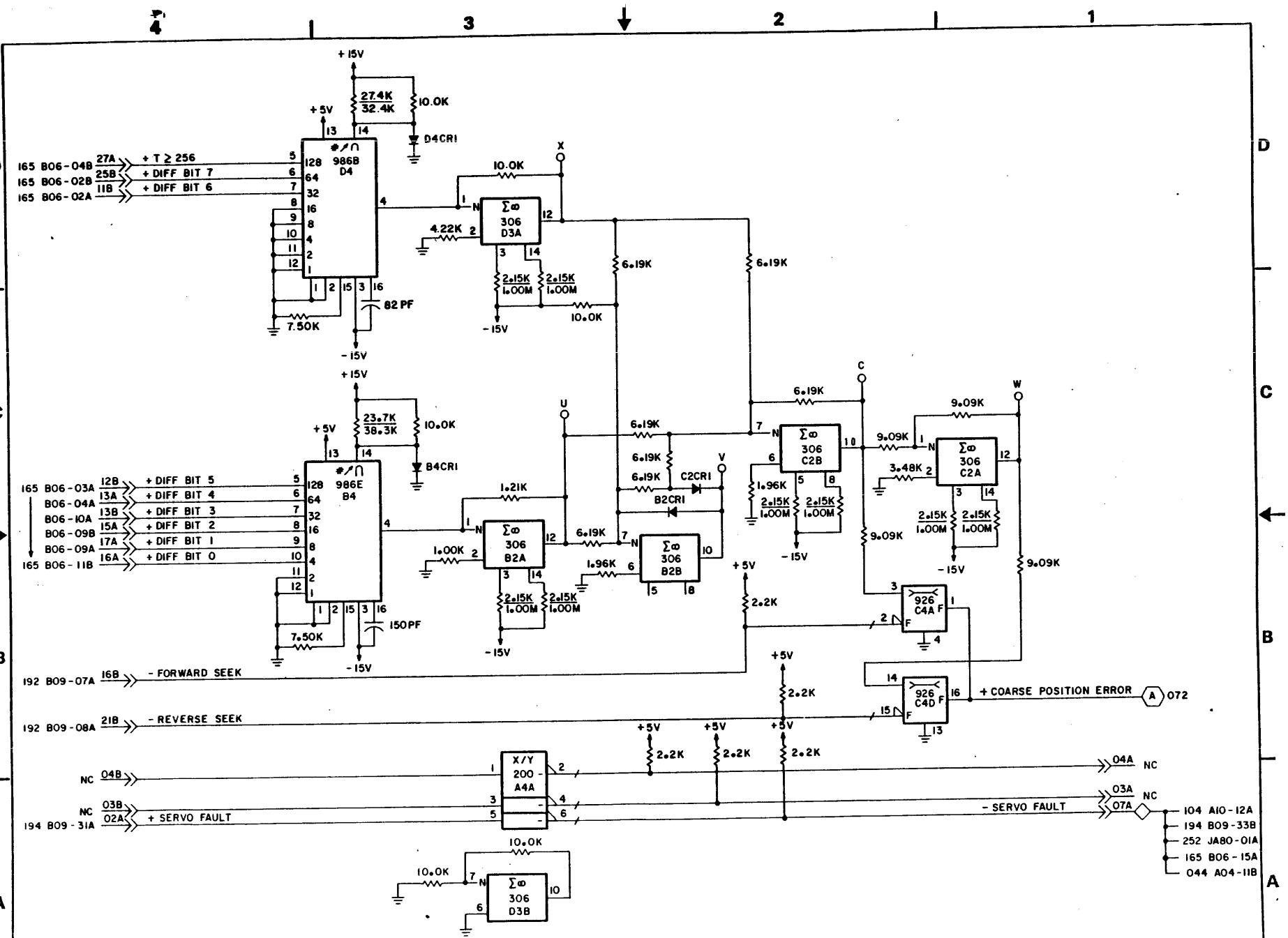

CONTROL DATA CORPORATION TWIN CITIES DISK DIVISION	SEEK DIFFERENCE GENERATION (9762) LOC A2A07	CODE IDENT 19333	C	83322240	AA	R
		CROSS REF NO 073	SHEET 3	PAGE 1-38.3/4		

REVISION STATUS OF SHEETS

1	2	3	4	5	6	7	8	9	10	11	12	13	14	15	16	17	18	19	20
A	A	A	A	A															
B	B	A	A	B															
C	C	C	C	C															
D	D	C	C	D															

REVISIONS

REV.	ECO.	DESCRIPTION	DRFT.	DATE	CHK'D
A	PE23000	RELEASED	MLA	8-26-76	
B	PE 48296	CORRECT DIAGRAMS	WEB	11-1-76	
C	PE 48402	CORRECT DIAGRAMS	WEB	12-16-76	
D	PE48523	CORRECT DIAGRAMS	DM	7-26-77	

UNUSED LOGIC ELEMENT

TYPE	LOCATION	OUTPUT PIN (S)
200	E1	2

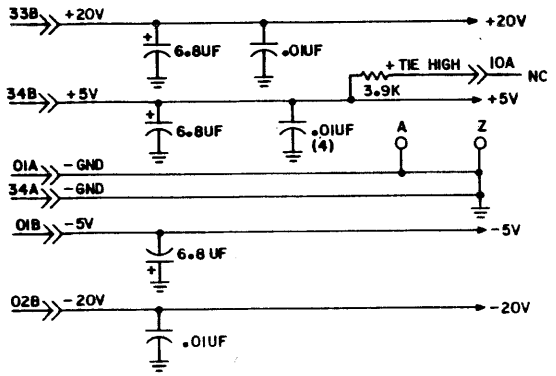

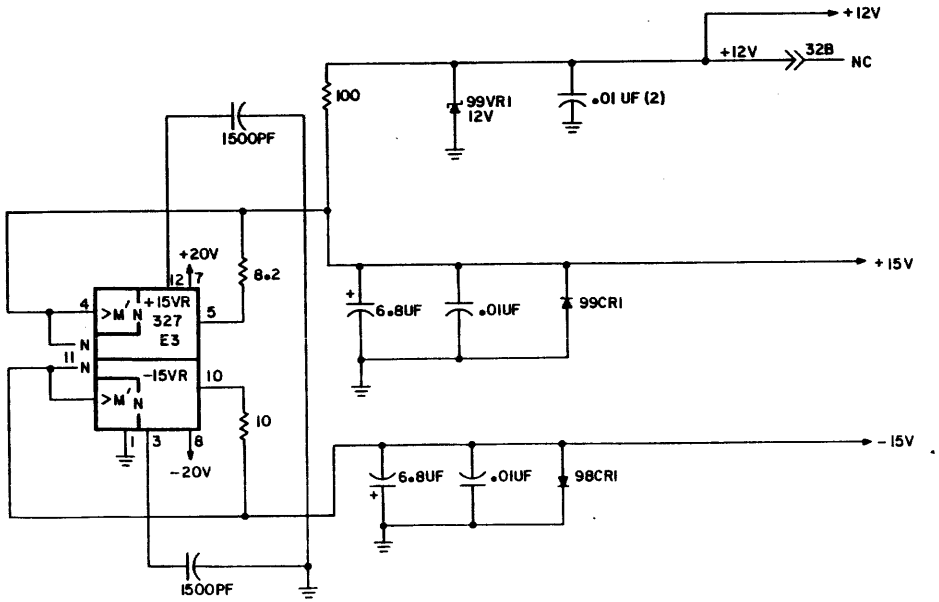

APPLICABLE TO BK5XX-9762. THIS SET USED FOR ELUV REV K & BELOW.

DRAWN	CONTROL DATA	ACCESS CONTROL NO. 2 DIAGRAMS	CODE IDENT 19333	C	83322240	Y	D
CHECKED							
ENGINEER	NORMANDALE DIVISION	TYPE ELUV LOC A2A08	CROSS REF NO 081	SHEET 1 OF 5	PAGE 1-39		
APPROVED							

REF 83214808

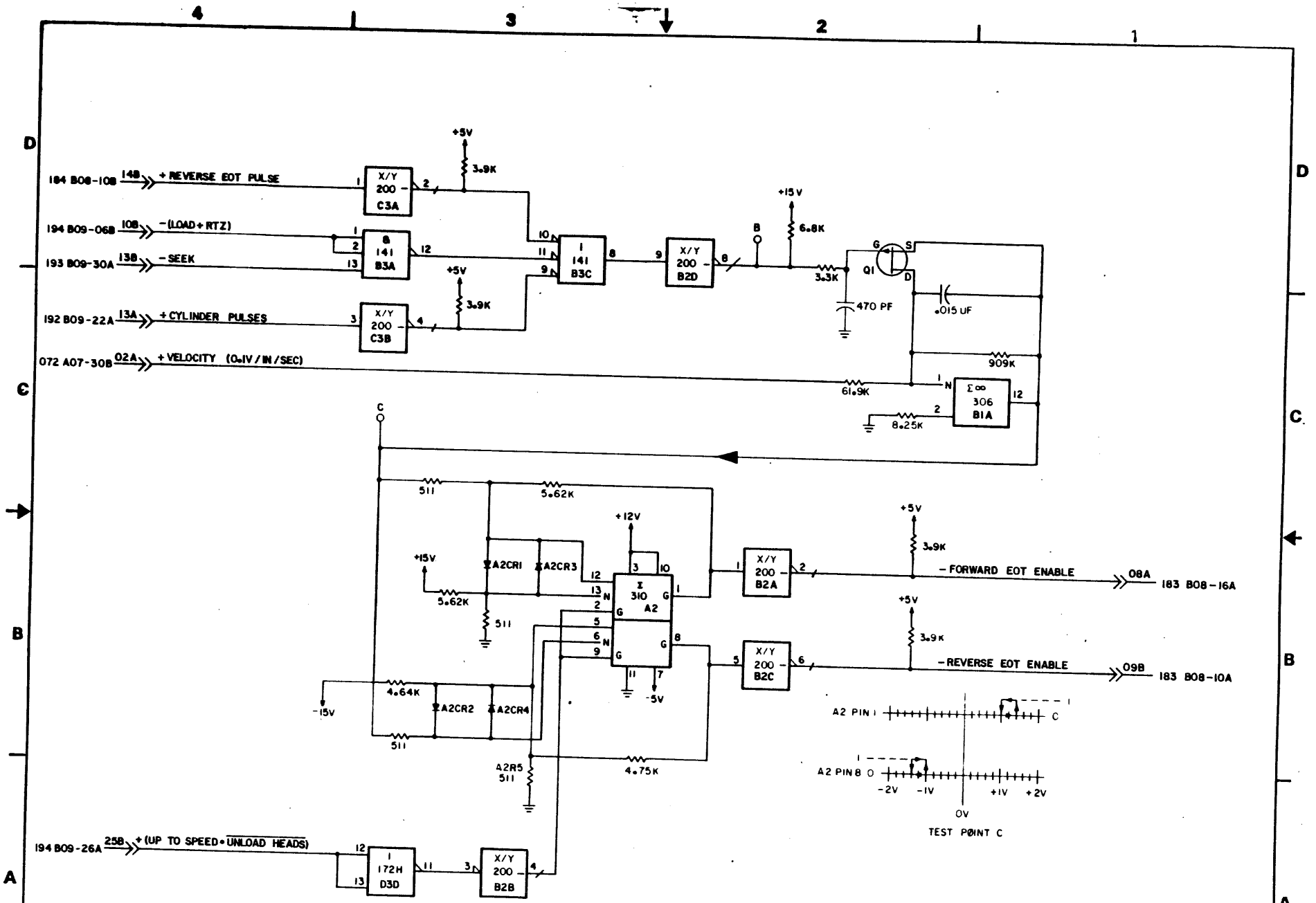

CONTROL DATA NORMANDALE DIVISION	FWD/REV EOT ENABLES (9762) LOC. A2A08	CAT. NO. 19333	C	83322240	C	D
		CROSS REF NO 082		SHEET 2	PAGE 1-40	

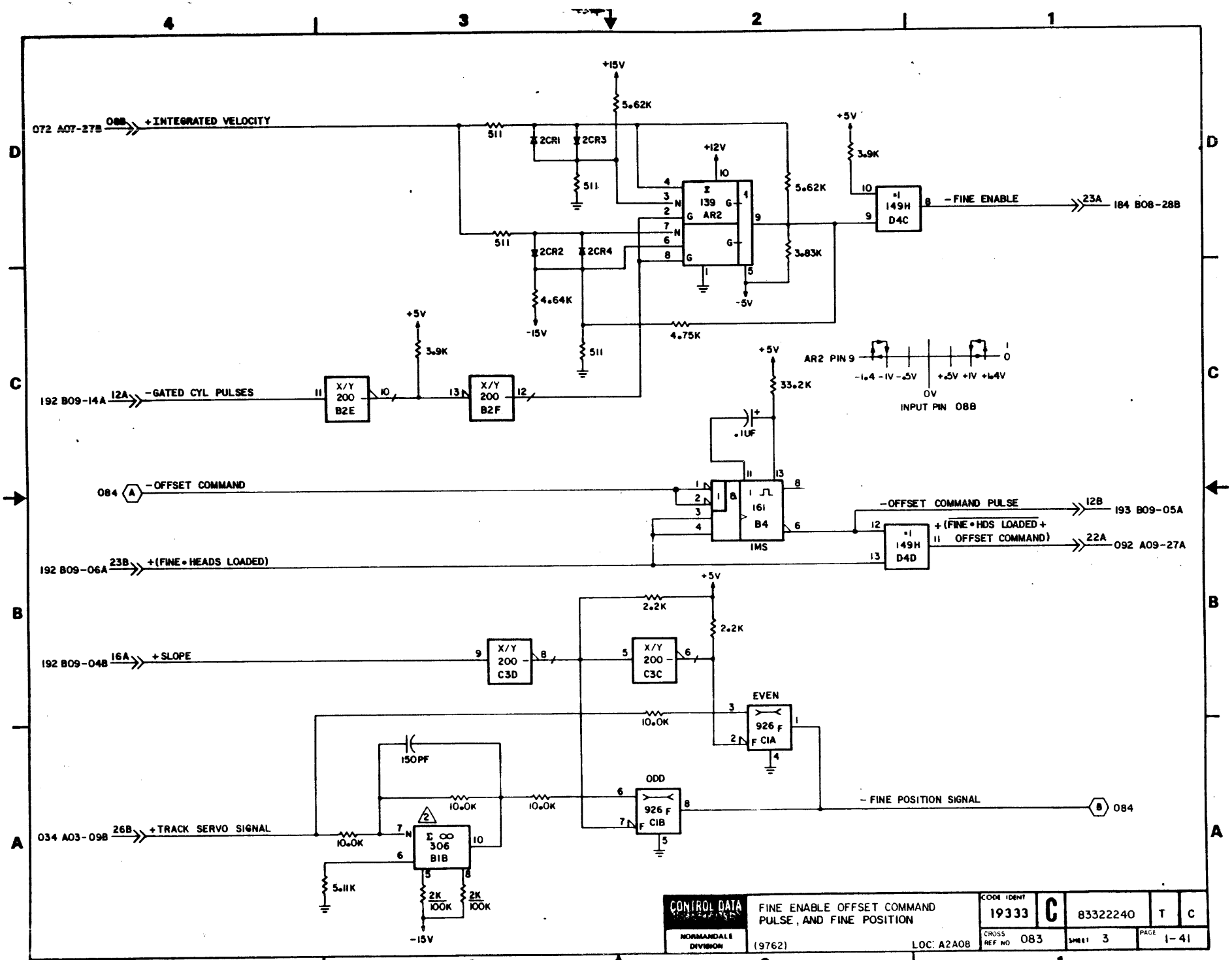

CONTROL DATA NORMANDALE DIVISION	FINE ENABLE OFFSET COMMAND PULSE, AND FINE POSITION	CODE IDENT 19333	C	83322240	T C
(9762)	LOC: A2A08	CROSS REF NO 083	SHEET 3	PAGE 1-41	

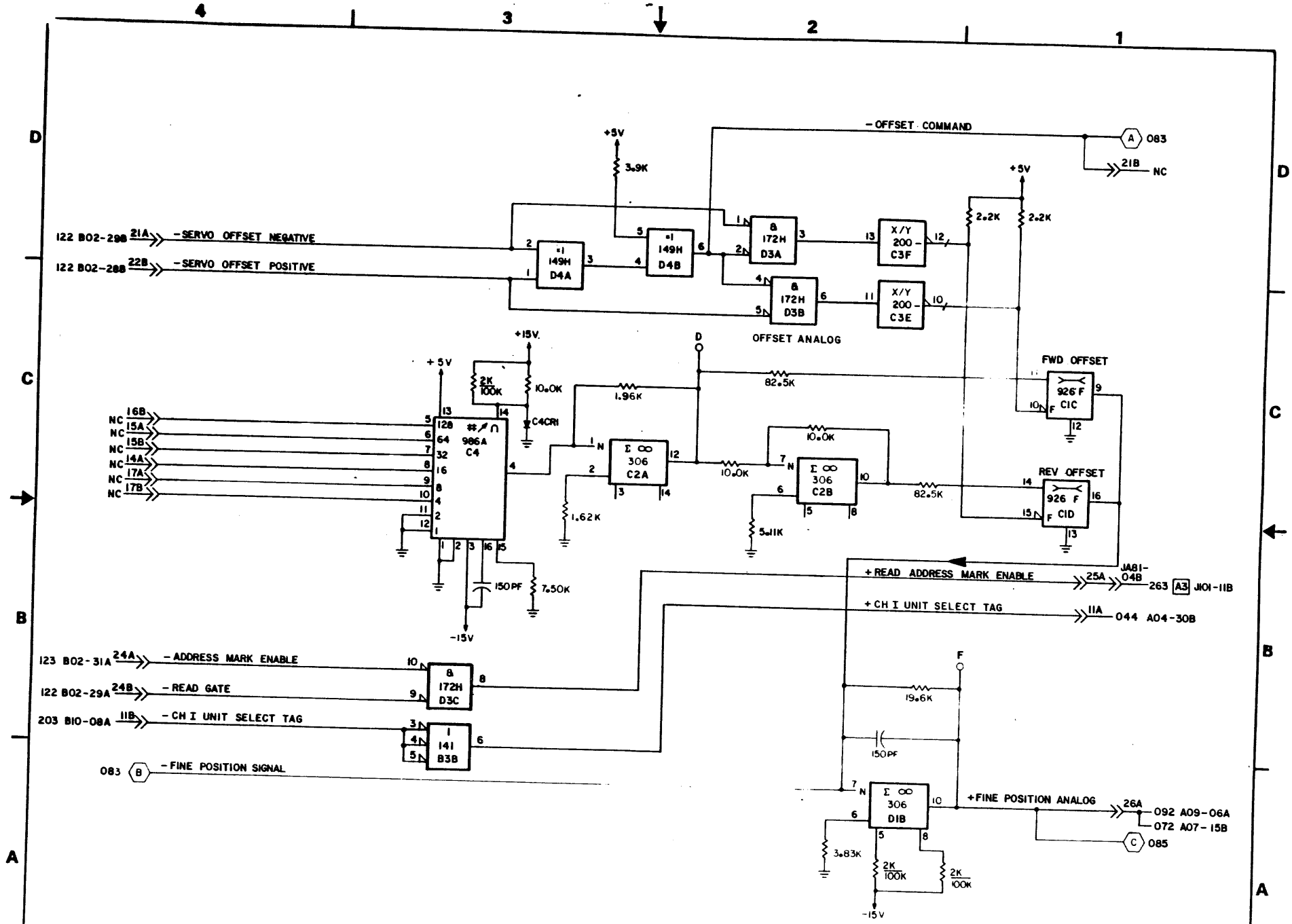

CONTROL DATA NORMANDALE DIVISION	OFFSET COMMAND AND FINE POSITION ANALOG (9762) LOC: A2A08	19333	C	83322240	A	C
		CROSS REF NO 084		SHEET 4	PAGE 1-42	

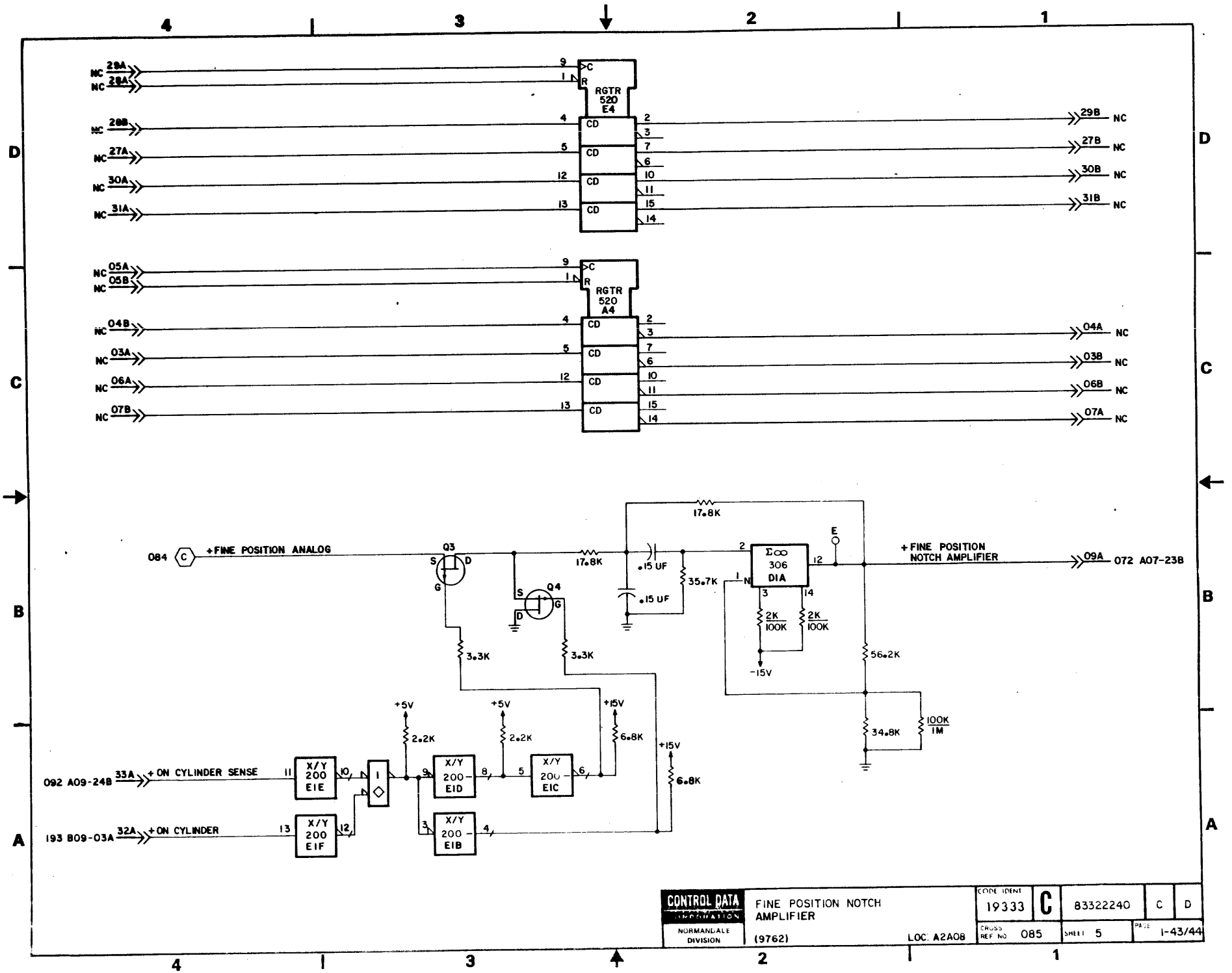

CONTROL DATA INFORMATION NORMANDALE DIVISION	FINE POSITION NOTCH AMPLIFIER (9762) LOC. A2A08	CODE IDENT 19333	C	83322240	C D
		CROSS REF NO 085		SHEET 5	PAGE 1-43/44

REVISION STATUS OF SHEETS

1	2	3	4	5	6	7	8	9	10	11	12	13	14	15	16	17	18	19	20
A	A	A	A	A															
B	B			B															
C	C	C	C	C															
D	D			D															
E	E	E	E	E															
F	F	F	F	F															
G	G																		
H		H	H																

REVISIONS

REV	ECO	DESCRIPTION	DRFT	DATE	CHK'D
A	PE23000	RELEASED	MLA	10-1-76	
B	PE48296	ERR CORR	MA	11-17-76	
C	PE48402	ERROR CORRECTIONS	VG	1-5-77	
D	PE48523	ERROR CORRECTION	SB	4-6-77	
E	DJ00184	CHG ELUV	MJ	1-8-82	DJ
F	DJ22000	XFER FROM PE	SMS	7-20-82	—
G	DJ00349	CORRECT ELUV DOC	MJ	7-23-82	DJ
H	DJ00456	CHG ELUV COMP AY	MJ	2-4-83	[illegible]

UNUSED LOGIC ELEMENTS

TYPE	LOCATION	OUTPUT PIN(S)
200	E2	12
149	D2	8

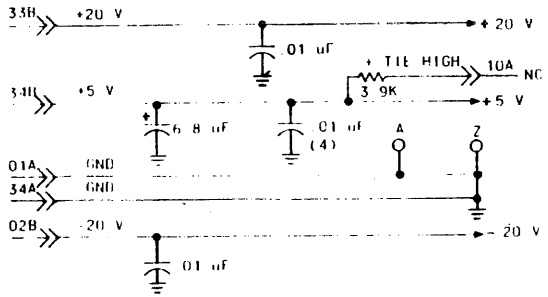

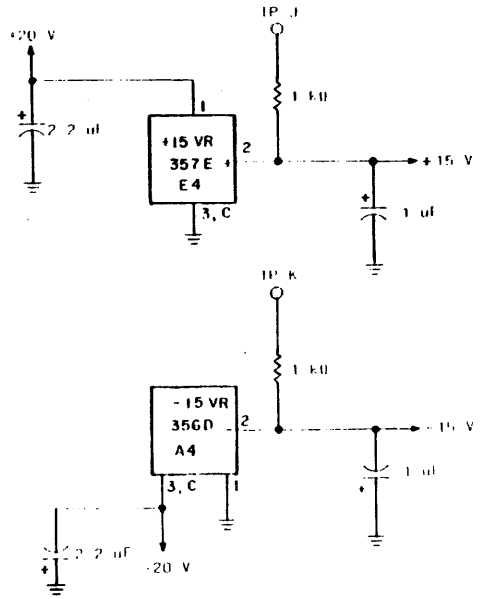

APPLICABLE TO BK5XX-9762. THIS SET USED FOR ELUV REV L & ABOVE.

CONTROL DATA NORMANDALE DIVISION	ACCESS CONTROL NO.2 DIAGRAMS	19331		83322240	Y	H
	TYPE ELUV	LOC A2A08			1-44.1	

REF: 83214808

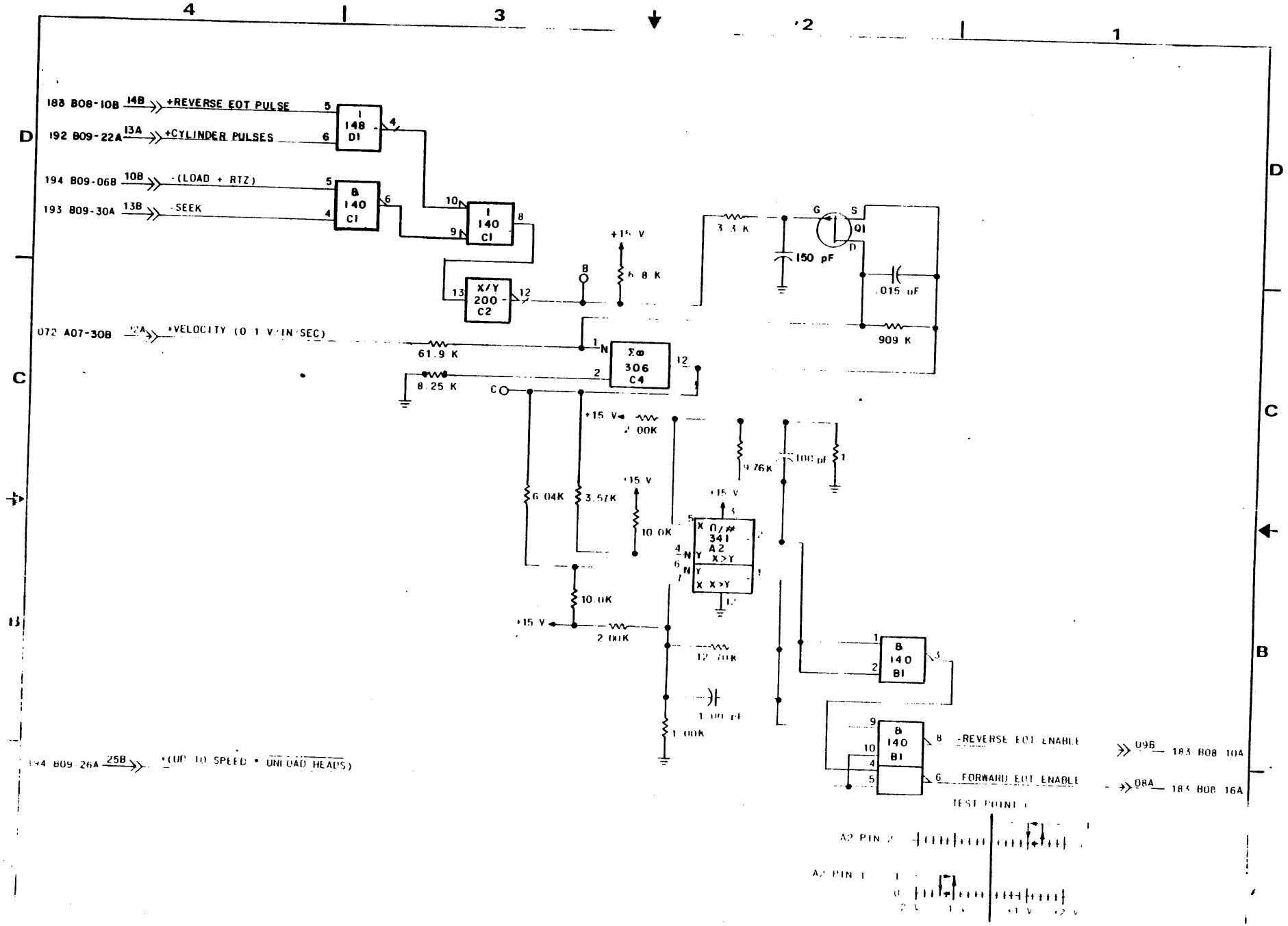

CONTROL DATA
NORMANDALE DIVISION

FWD/REV EOT ENABLE

(9762)

	83322240	Y	G
	SHEET	PAGE 1-44.2	

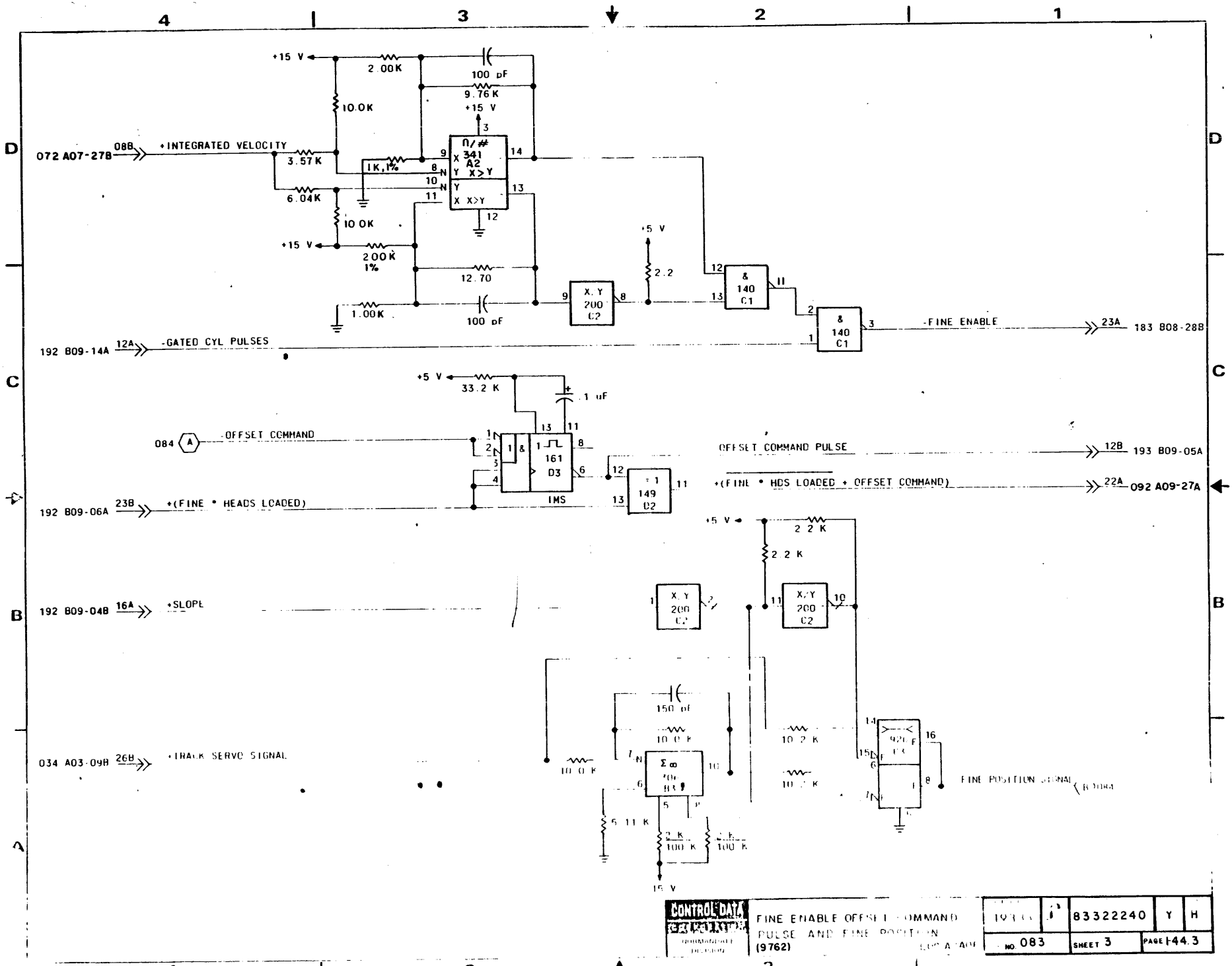

CONTROL DATA

FINE ENABLE OFFSET COMMAND PULSE AND FINE POSITION (9762)

		83322240	Y	H
NO. 083	SHEET 3	PAGE 144.3		

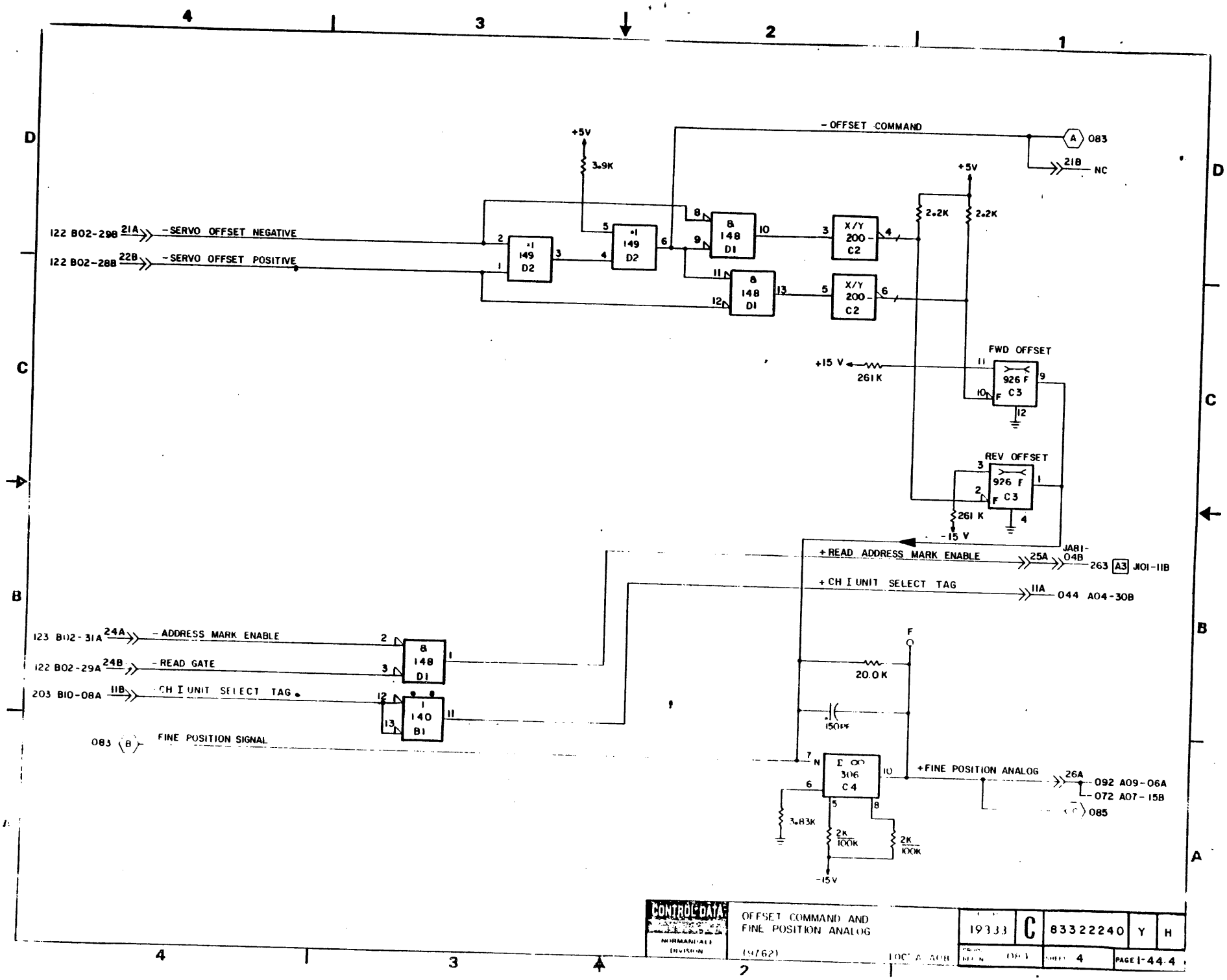

- OFFSET COMMAND
083
21B NC
+5V
3.9K
122 B02-29B 21A -SERVO OFFSET NEGATIVE
122 B02-28B 22B -SERVO OFFSET POSITIVE
149 D2
148 D1
X/Y 200 C2
2.2K
FWD OFFSET
926 F C3
+15 V
261K
REV OFFSET
261 K
-15 V
+READ ADDRESS MARK ENABLE
25A
JA81-04B
263 A3 J101-11B
+CH I UNIT SELECT TAG
11A
044 A04-30B
123 B02-31A 24A -ADDRESS MARK ENABLE
122 B02-29A 24B -READ GATE
203 B10-08A 11B CH I UNIT SELECT TAG
140 B1
083 B FINE POSITION SIGNAL
20.0 K
150PF
306 C4
+FINE POSITION ANALOG
26A
092 A09-06A
072 A07-15B
085
3.83K
2K 100K
-15V
CONTROL DATA
NORMANDALE DIVISION
OFFSET COMMAND AND FINE POSITION ANALOG
(9762)
19333
C
83322240
Y
H
4
PAGE 1-44.4

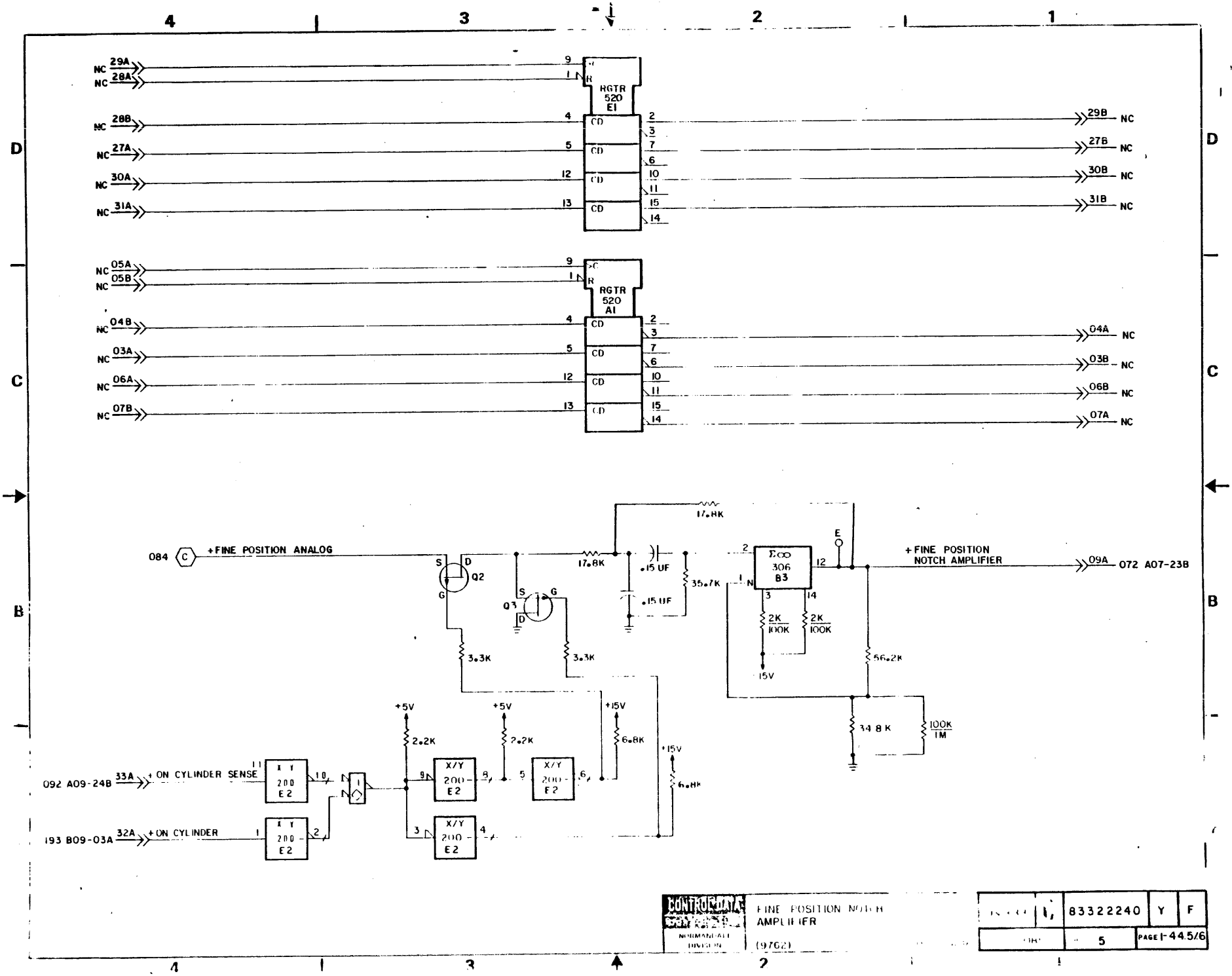
4
3
2
1
D
C
B
NC 29A
NC 28A
RGTR 520 E1
NC 28B
NC 27A
NC 30A
NC 31A
29B NC
27B NC
30B NC
31B NC
NC 05A
NC 05B
RGTR 520 A1
NC 04B
NC 03A
NC 06A
NC 07B
04A NC
03B NC
06B NC
07A NC
084 +FINE POSITION ANALOG
Q2
Q3
17.8K
.15 UF
35.7K
3.3K
Σ∞ 306 B3
+FINE POSITION NOTCH AMPLIFIER
09A 072 A07-23B
2K 100K
56.2K
34.8K
100K 1M
+5V
+15V
2.2K
6.8K
6.8K
092 A09-24B 33A +ON CYLINDER SENSE
193 B09-03A 32A +ON CYLINDER
X/Y 200 E2
CONTROL DATA
NORMANDALE DIVISION
FINE POSITION NOTCH AMPLIFIER
(9762)
83322240
Y
F
5
PAGE 1-44.5/6

REVISION STATUS OF SHEETS

1	2	3	4	5	6	7	8	9	10	11	12	13	14	15	16	17	18	19	20
A	A	A																	
B	A	A																	
C	C	C																	
D	D	D																	
E	D	D																	
F	D	D																	
G	G	G																	
H																			

REVISIONS

REV.	ECO	DESCRIPTION	DRFT.	DATE	CHK'D
A	PE25900	RELEASED	MLA	8-26-76	
B	PE48296	CORRECT DIAGRAMS	WEB	11-1-76	
C	PE48402	CORR DIA			
D	PE48523	CORR DIA	DM	7-26-77	
E	PE48706	ADD CAPACITORS	TH	7-26-79	
F	PE55370	ERROR CORRECTION	"	"	
G	PE55668	IMPROVE SERVO	MF	11-4-80	
H	DJ22000	XFR FRM PE	JG	72384	
	DJ72000A	FORMAT CHG			

UNUSED LOGIC ELEMENTS

TYPE	LOCATION	OUTPUT PIN (S)
140	D2	3,6
200	E1	6,12
306	A1	12

NOTE:

1. REFER TO CROSS REFERENCE NUMBER 341 FOR CABLING INFORMATION
2. MOD D & ABV ONLY

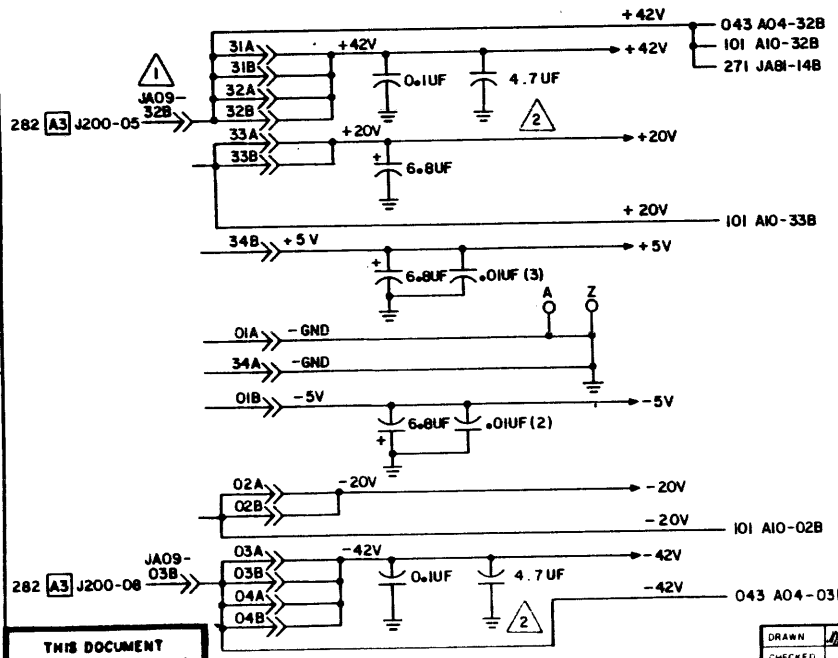

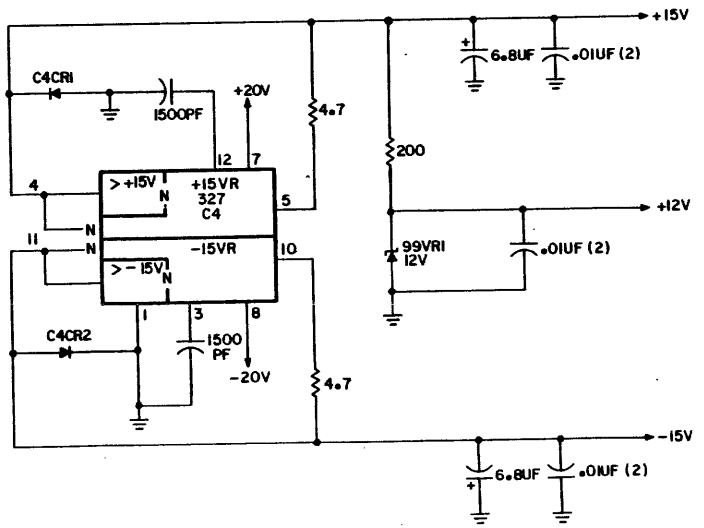

THIS SET USED FOR FLVP REV W & BELOW (BK5XX = 9762)

THIS DOCUMENT TRANSFERRED TO TCD DIVISION DATE: 7/27/84

DRAWN		CONTROL DATA CORPORATION	SWITCHING MODE CONTROL DIAGRAMS	CODE IDENT 19333	C	83322240	Z H
CHECKED							
ENGINEER		TWIN CITIES DISK DIVISION	TYPE: FLPV LOC A2A09	CROSS REF 091	SHEET 1 OF 3	PAGE 1-45	
APPROVED							

REF 83214809

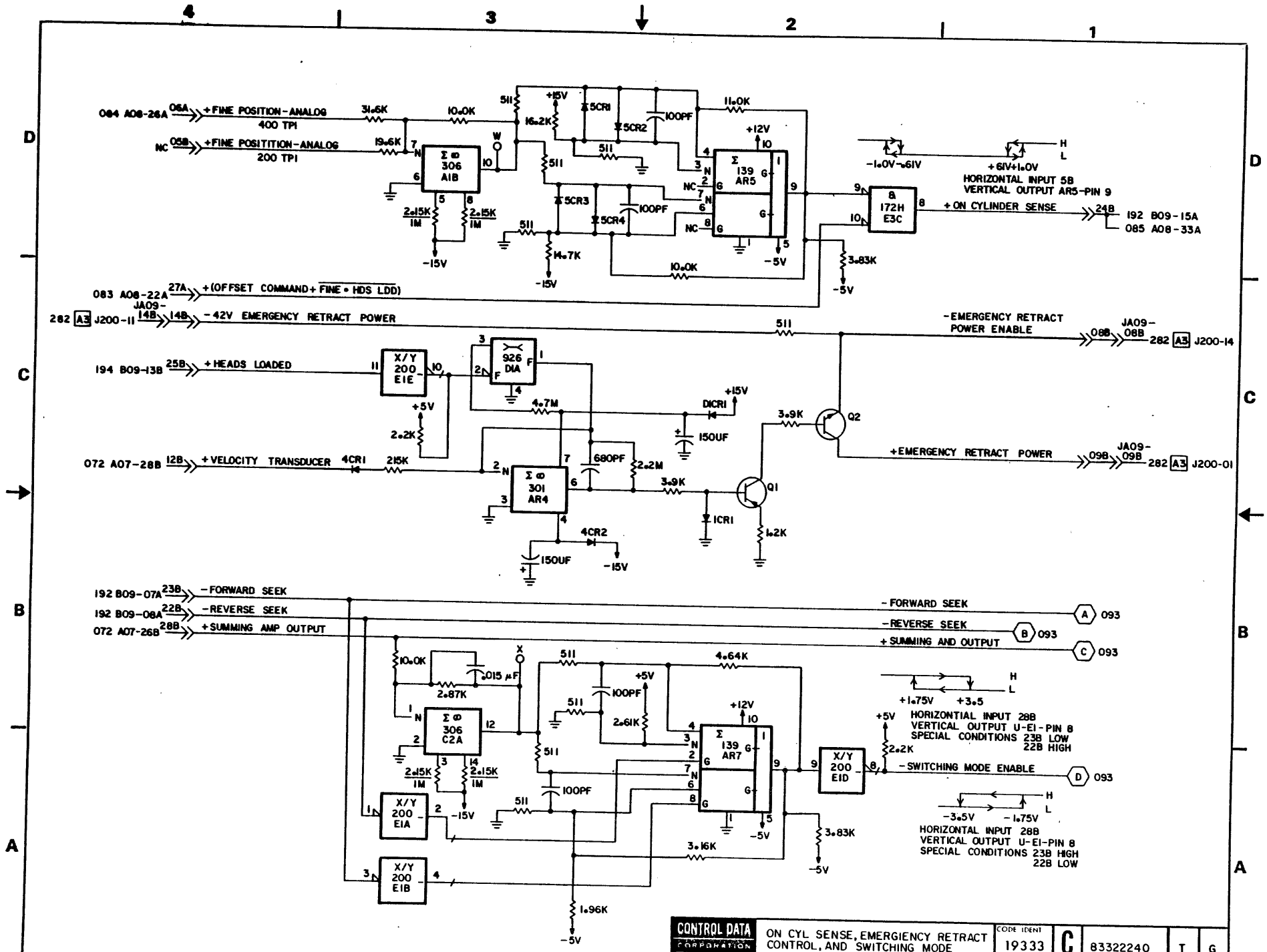

CONTROL DATA CORPORATION NORMANDALE DIVISION	ON CYL SENSE, EMERGIENCY RETRACT CONTROL, AND SWITCHING MODE (9762) LOC A2A09	CODE IDENT 19333	C	83322240	T	G
		CROSS REF NO 092		SHEET 2	PAGE 1-46	

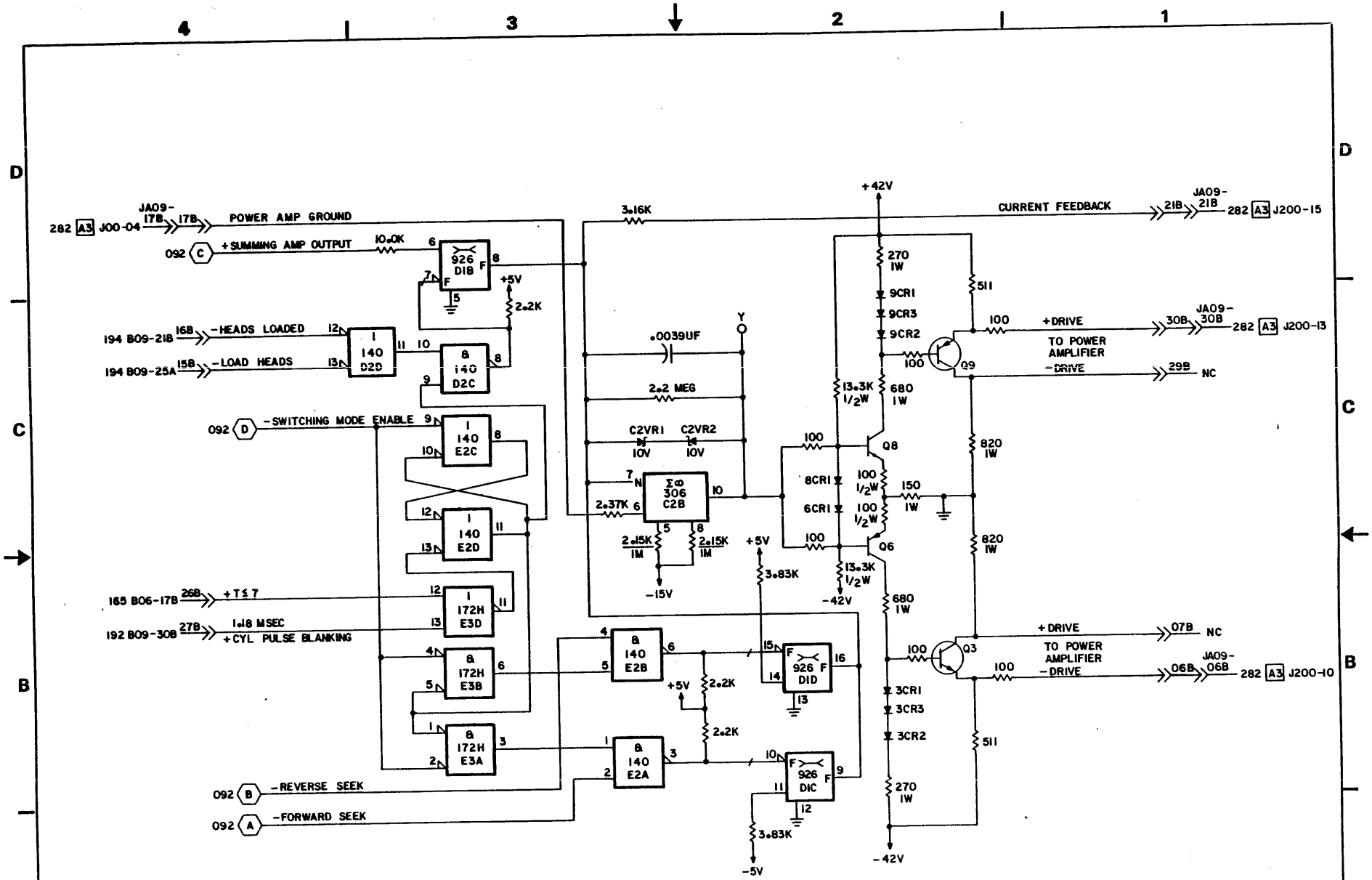

CONTROL DATA CORPORATION NORMANDALE DIVISION	POWER AMPL CONTROL (9762) LOC. A2A09	CODE IDENT 19333	C	83322240	T G
		REV. 093	SHEET 3	PAGE 1-47/48	

REVISION STATUS OF SHEETS

	1	2	3	4	5	6	7	8	9	10	11	12	13	14	15	16	17	18	19	20
A	A	A	A																	
B	A	A																		
C	C	C																		
D	D	D																		
E	D	D																		
F	D	D																		
G	G	G																		
H	H	H																		
J	J	J																		

UNUSED LOGIC ELEMENTS

ELEMENT	LOCATION	OUTPUT (PINS)
200	U-E3D	8

REVISIONS

REV	ECO	DESCRIPTION	DRFT	DATE	CHK'D
	DJ23000	RELEASED			
J	DJ00599	REVISED & REDRAWN SEE M/F FOR REV HISTORY	N P	11-10-83	CR
	DJ72000A	FORMAT CH8			

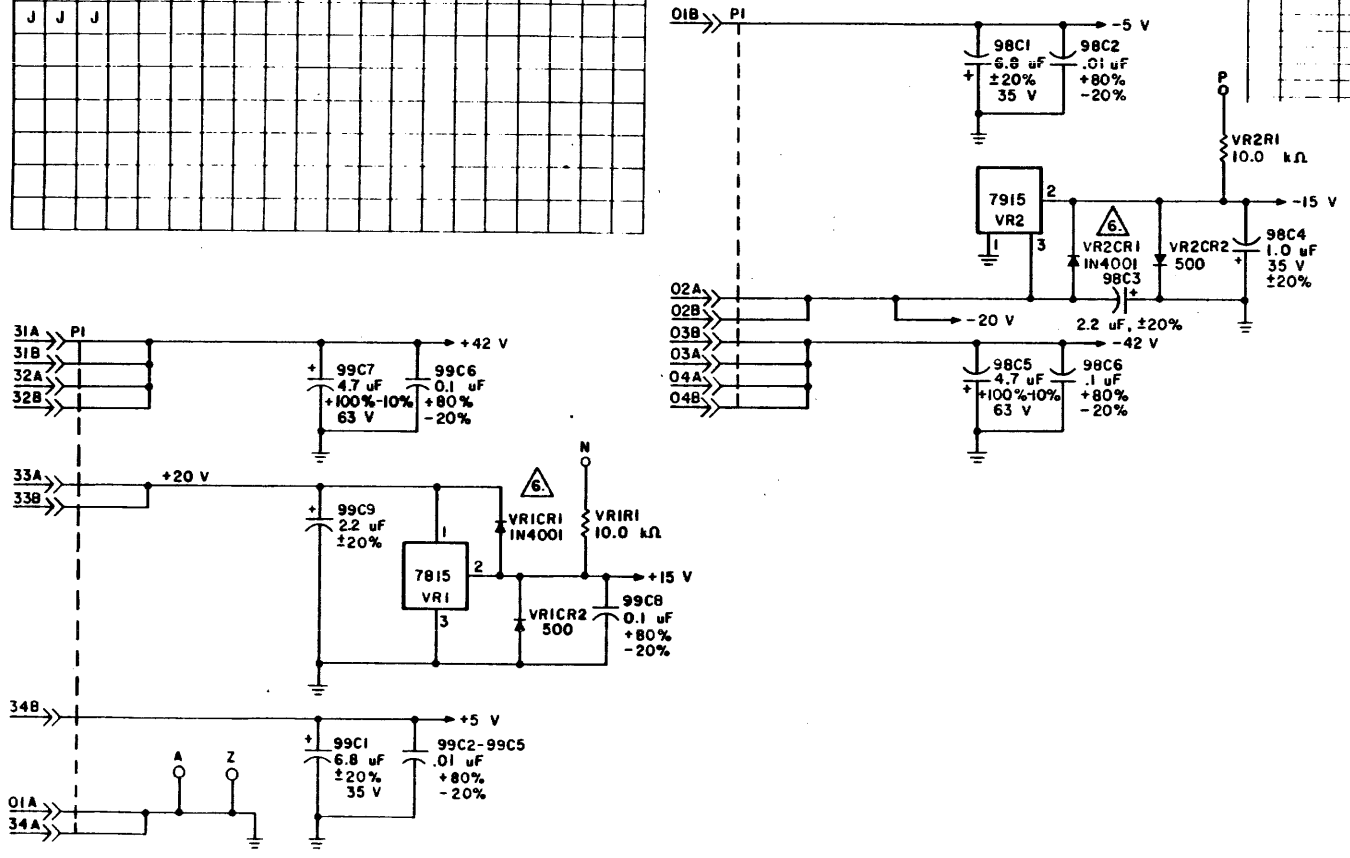

NOTES:

1. UNLESS OTHERWISE SPECIFIED: ALL 14 PIN IC'S HAVE PIN 7 CONNECTED TO GND AND PIN 14 CONNECTED TO +5 V.

   TYPE 306 IC'S HAVE PIN 4 CONNECTED TO -15 V AND PINS 9 AND 13 CONNECTED TO +15 V.

   ALL DIODES SILICON 24553500.

   ALL TRANSISTORS MM5005. 50222400.

2. TRANSISTOR, MM3007, 50222502.
3. TRANSISTOR, MM3005, 50222500.
4. TRANSISTOR, MM5007, 50222402.
5. TEST SELECT RESISTORS TO BE SELECTED FROM DRAWING 94357500 AND INSERTED DURING CARD TEST PER RECOMMENDED TEST PROCEDURE.
6. DIODE, SILICON, 95637301.
7. FET P-CHANNEL, P1167, 50218200.

THIS SET USED FOR FLVP REV Y & ABV

DRAWN	K. BARTSCH	MAGNETIC PERIPHERALS INC	SCHEMATIC DIAGRAM SWITCHING MODE CONTROL	TWIN CITIES DISK DIVISION	C	83322240 Z J
DESIGNED			TYPE FLPV	DOCUMENT 19333	REV 091	SHEET 1 of 3 PAGE 1-48.1
ENGINEER						
QUALITY						

REF 83214809

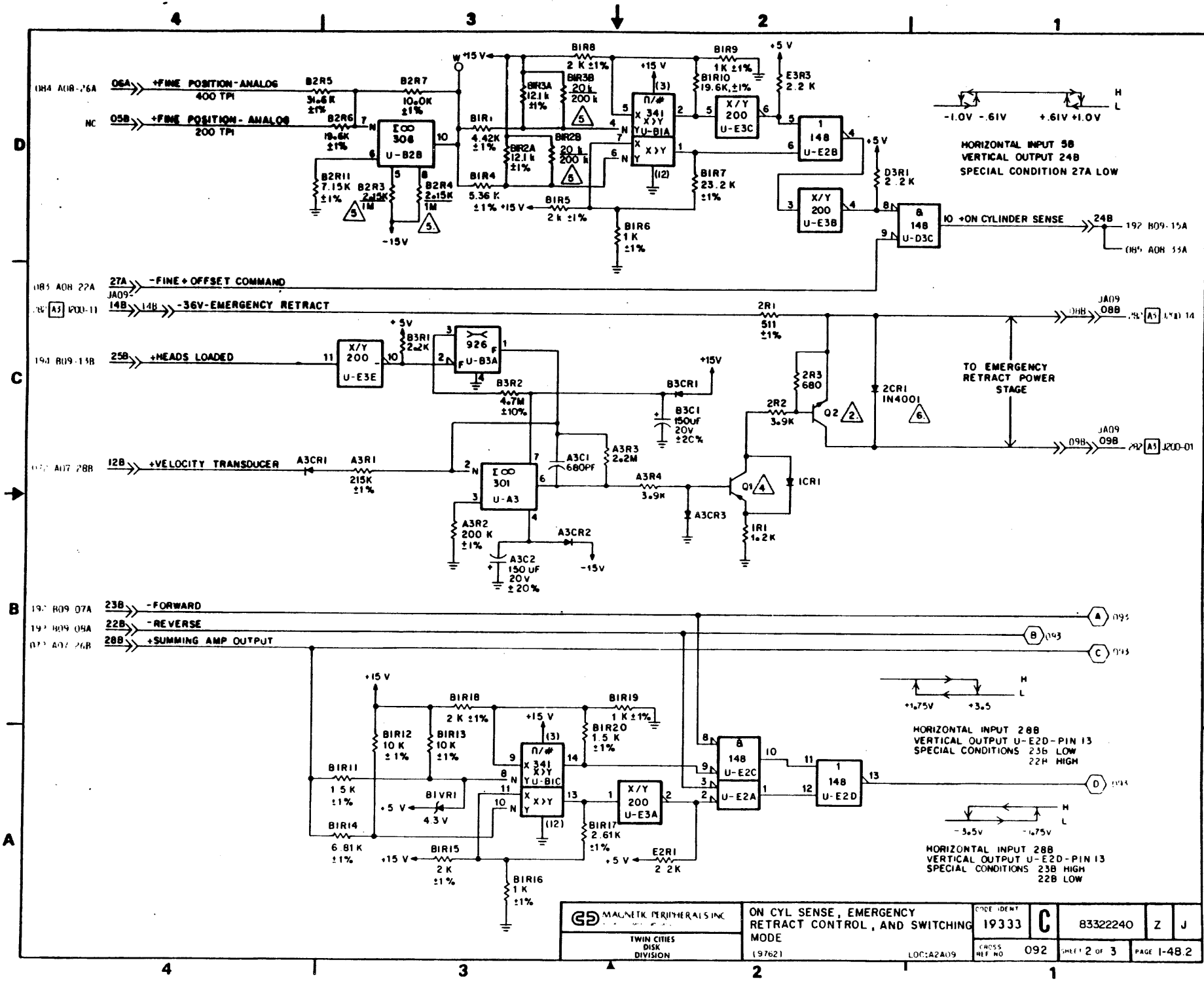
+FINE POSITION-ANALOG 400 TPI
+FINE POSITION-ANALOG 200 TPI
-FINE + OFFSET COMMAND
-36V-EMERGENCY RETRACT
+HEADS LOADED
+VELOCITY TRANSDUCER
-FORWARD
-REVERSE
+SUMMING AMP OUTPUT
+ON CYLINDER SENSE
TO EMERGENCY RETRACT POWER STAGE
HORIZONTAL INPUT 5B
VERTICAL OUTPUT 24B
SPECIAL CONDITION 27A LOW
HORIZONTAL INPUT 28B
VERTICAL OUTPUT U-E2D-PIN 13
SPECIAL CONDITIONS 23B LOW
22B HIGH
HORIZONTAL INPUT 28B
VERTICAL OUTPUT U-E2D-PIN 13
SPECIAL CONDITIONS 23B HIGH
22B LOW
MAGNETIC PERIPHERALS INC
TWIN CITIES DISK DIVISION
ON CYL SENSE, EMERGENCY RETRACT CONTROL, AND SWITCHING MODE
(9762)
LOC:A2A09
CODE IDENT 19333
C
83322240
Z
J
CROSS REF NO 092
SHEET 2 OF 3
PAGE 1-48.2

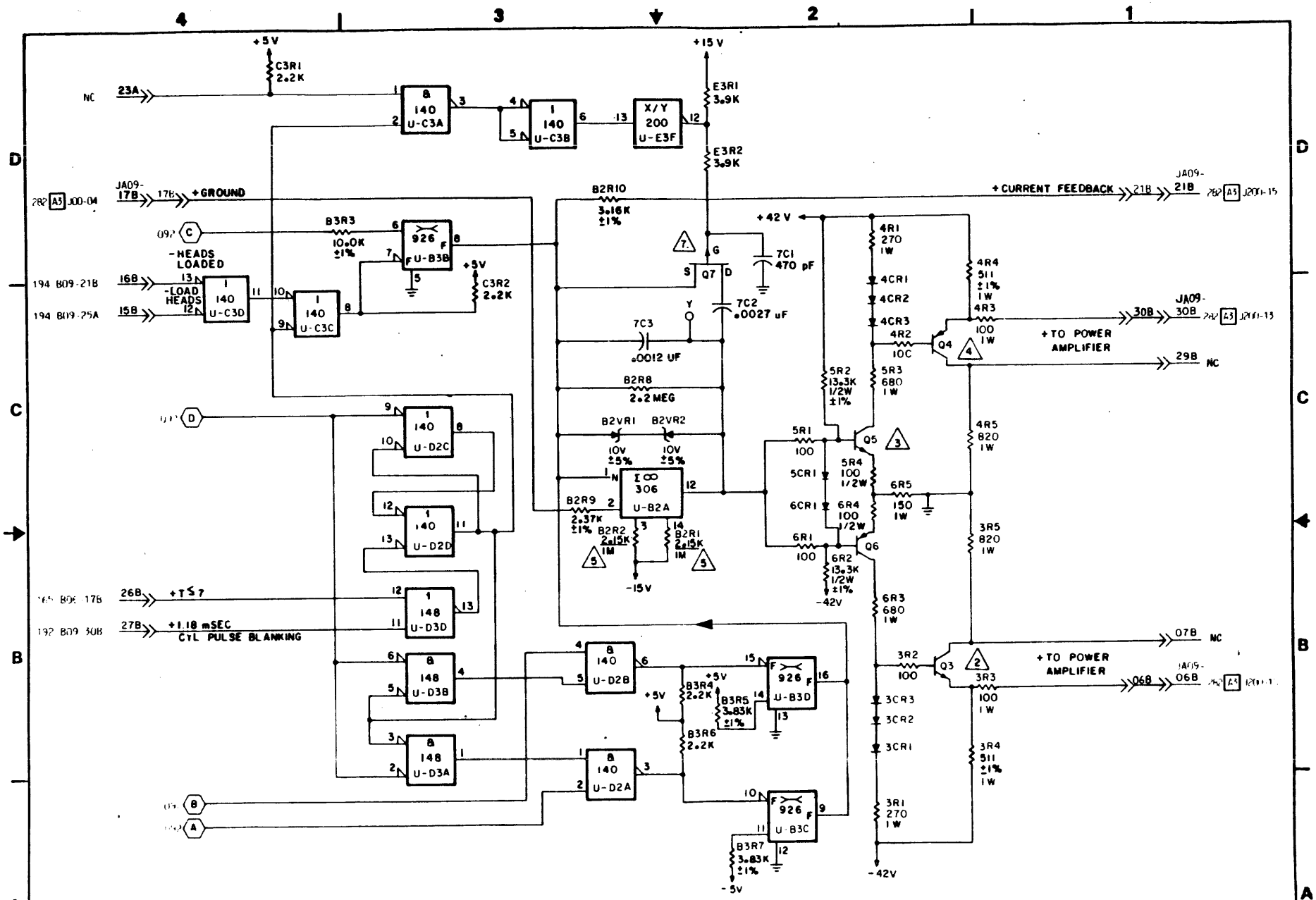

CDC TWIN CITIES DISK DIVISION	POWER AMPL CONTROL (9762) LOC: A2A09	CODE IDENT 19333	C	83322240	Z J
		CROSS REF NO 093		SHEET 3 OF 3	PAGE 1-48.3/4

REVISION STATUS OF SHEETS

1	2	3	4	5	6	7	8	9	10	11	12	13	14	15	16	17	18	19	20
A	A	A																	

REVISIONS

REV	ECO.	DESCRIPTION	DRFT	DATE	CHK'D
A	DJ00399	VDE NEW CREATE	KKB	11-16-82	DSD

UNUSED LOGIC ELEMENTS

TYPE	LOCATION	OUTPUT PIN (S)
140	D2	3,6
200	E1	6,12
306	A1	12

NOTE:

1. REFER TO CROSS REFERENCE NUMBER 341 FOR CABLING INFORMATION

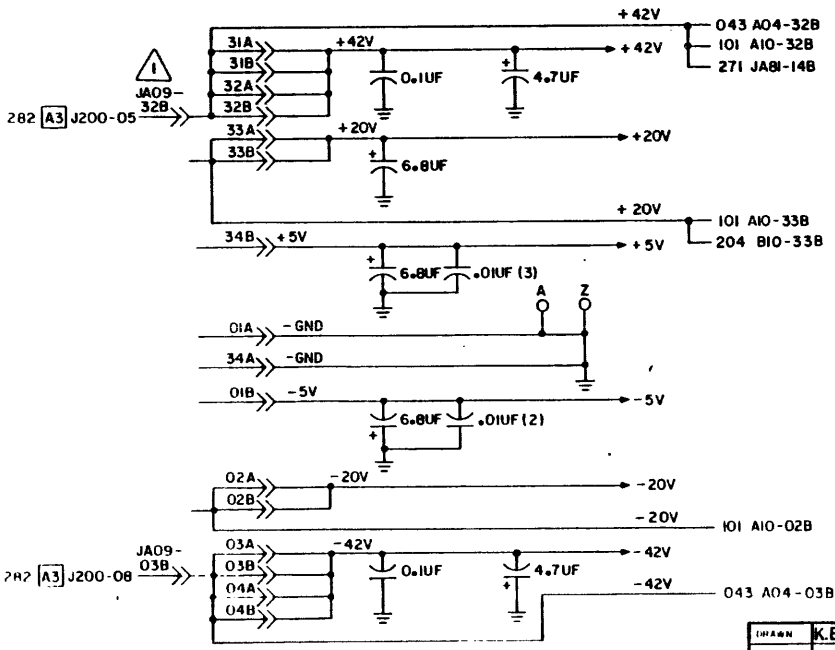

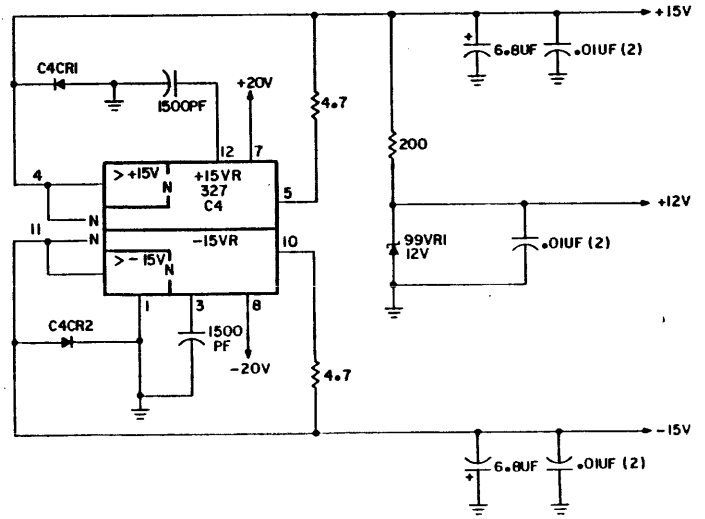

THIS SET USED FOR BK5C6D (BK5XX=9762)

DRAWN	K.BARTSCH	11-16-82	CONTROL DATA	SWITCHING MODE CONTROL DIAGRAMS	CODE IDENT 19333	C	83322240 Z A
CHECKED							
ENGINEER			SMALL DISK DIVISION	TYPE FLPV LOC A2A09	CROSS REF NO 091	SHEET 1 OF 3	SCALE 1-48.5
APPROVED							

REF 83214867

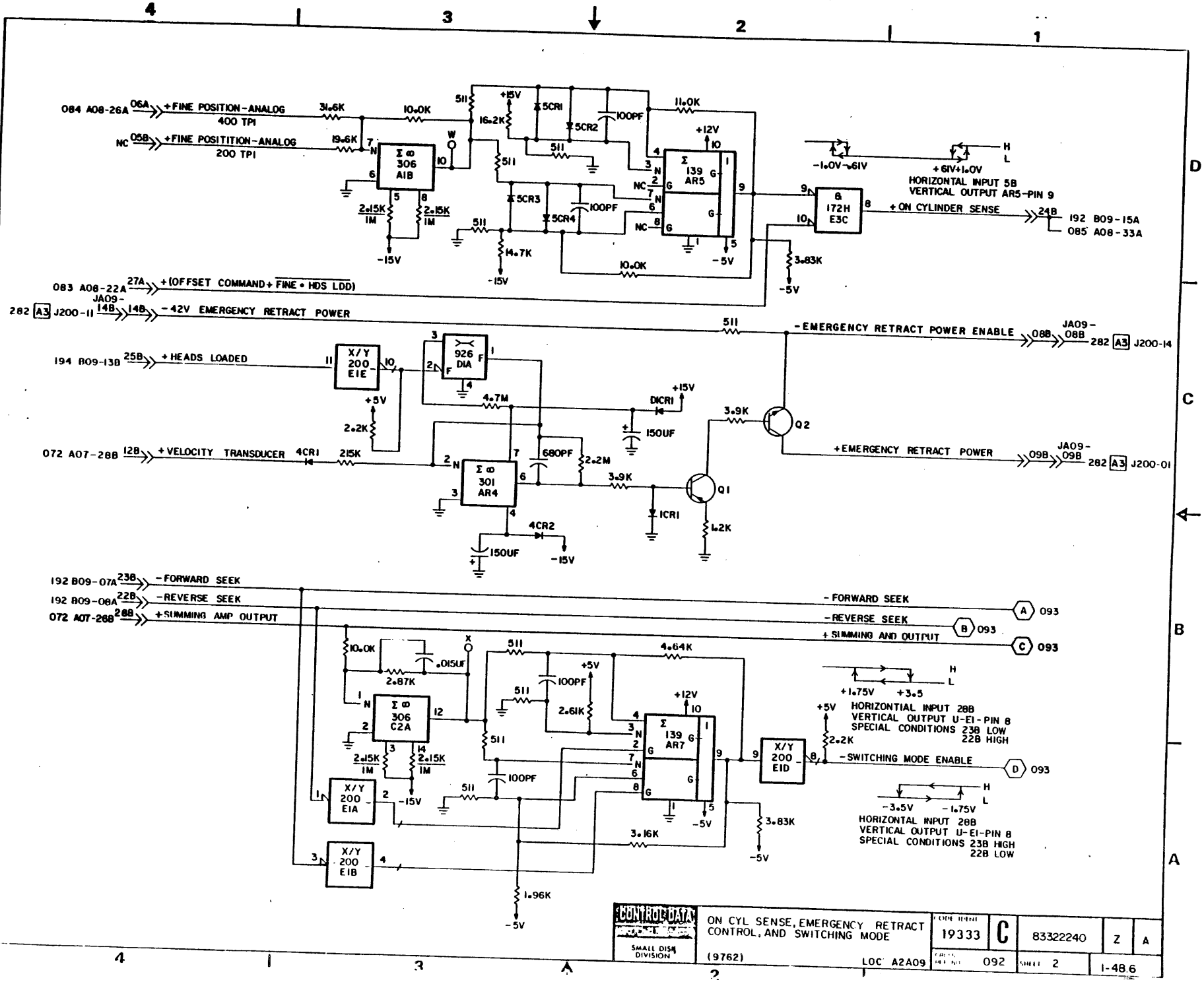

CONTROL DATA
SMALL DISK DIVISION

ON CYL SENSE, EMERGENCY RETRACT CONTROL, AND SWITCHING MODE

(9762) LOC A2A09

CODE IDENT 19333 | C | 83322240 | Z | A

CIRCUIT NO. 092 | SHEET 2 | 1-48.6

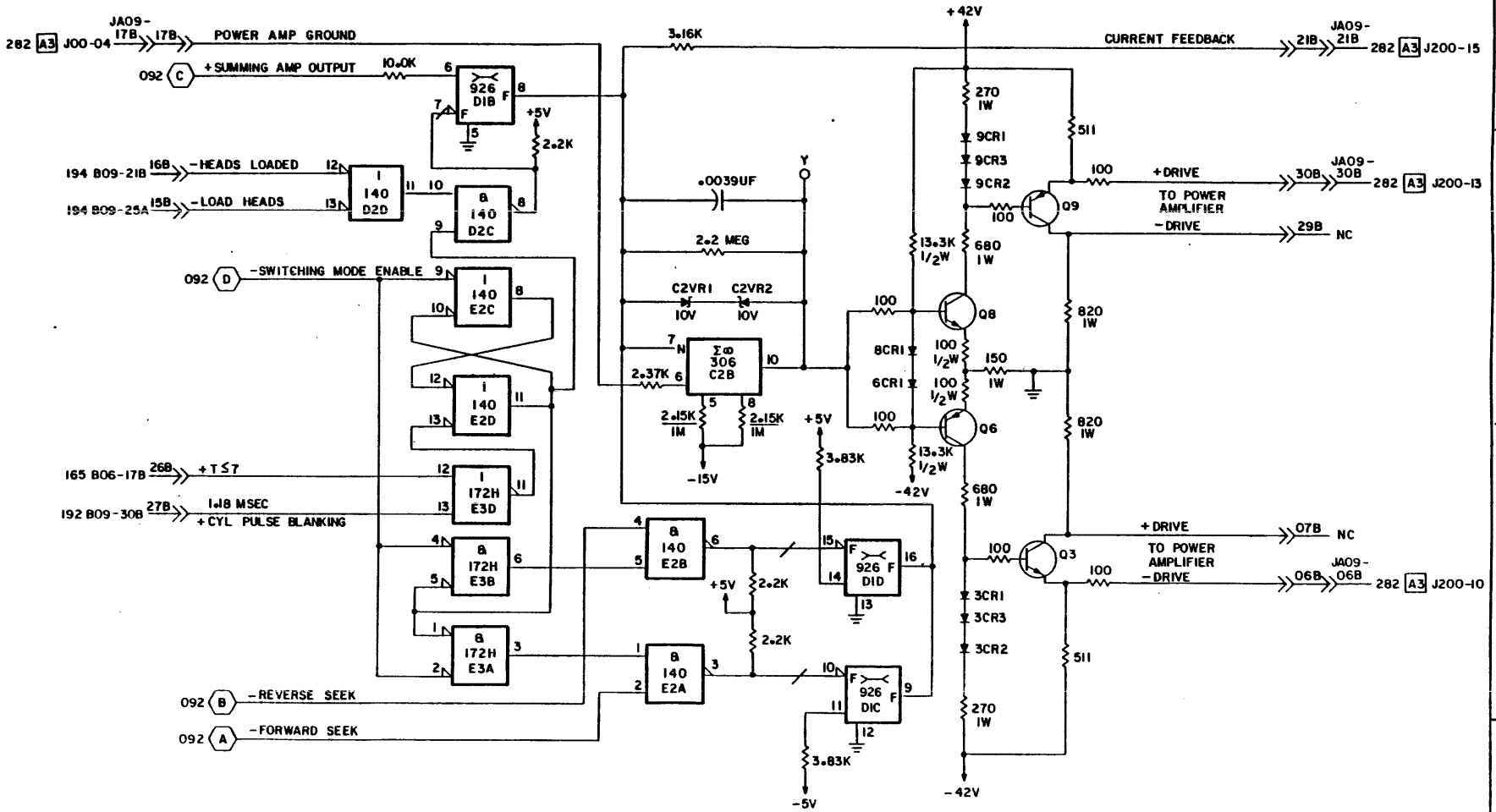

CONTROL DATA SMALL DISK DIVISION	POWER AMPL CONTROL (9762) LOC A2A09	CODE IDENT 19333	C	83322240	Z	A
		DRWG REF NO 093		SHEET 3	1-48.7/8	

REVISION STATUS OF SHEETS

1	2	3	4	5	6	7	8	9	10	11	12	13	14	15	16	17	18	19	20
A	A	A	A																
B	B	B	B																
C	C	C	C																
D	D	D	D																
E	E	E	D																
F	F	F	F																
G	G	G	G																
H	H	H	H																
J	J	J	J																
K	K	K	K																
L	K	L	K																
M	K	M	K																
N	K	N	K																
P	P	N	K																

REVISIONS

REV	ECO.	DESCRIPTION	DRFT.	DATE	CHK'D
A	PE23000	RELEASED			
B	PE48296	CORRECT DIAGRAMS			
C	PE48402	CORRECT DIAGRAMS			
D	PE48445	IMPROVE CIRCUIT CARD			
E	PE48523	CORRECT DIAGRAMS			
F	PE48652	IMPROVE CARD YIELD			
G	PE48675	ERR CORR			
H	PE48932	ADD DIODE TO +20 PWR			
J	PE55377	IMPROVE CARD YIELD			
K	PE55370	ERROR CORRECTION			
L	PE55865	ERROR CORRECTION			
M	PE55854	DOWN GRADE 80 MB TO 40 MB			
N	PE55928	CHG RES VALUES	MF	11-4-80	
P	PE60016	ERROR CORR	MF	11-4-80	

UNUSED LOGIC ELEMENTS

ELEMENT TYPE	LOCATION	OUTPUT PIN(S)
200	D3D	8

LOCAL / REMOTE SWITCH ON CARD EDGE

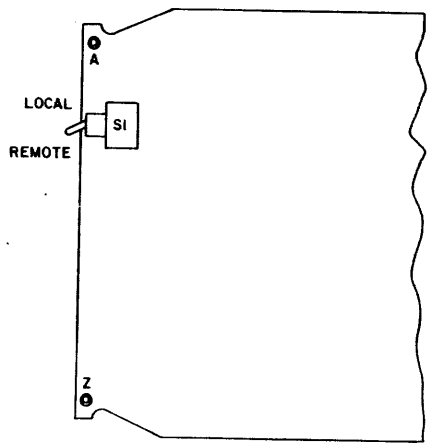

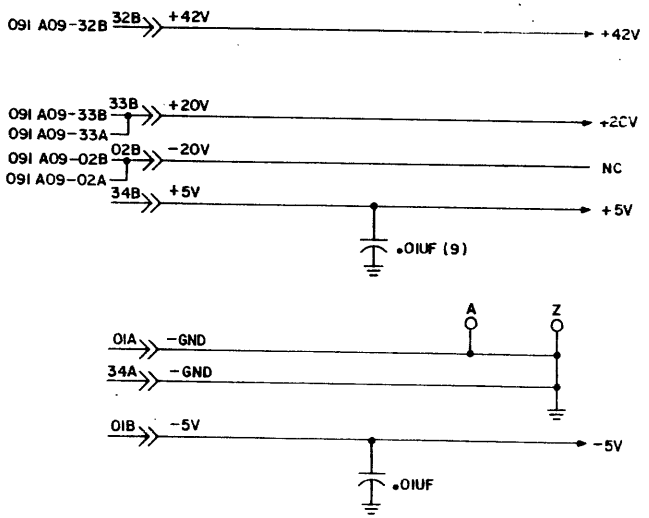

THIS SET USED FOR 6SGV REV U & BLW. APPLICABLE TO 60 PIN I/O.

DRAWN		CONTROL DATA CORPORATION NORMANDALE DIVISION	INTERLOCKS AND SPEED DETECTOR DIAGRAMS	CODE IDENT 19333	C	83322240	U	P
CHECKED								
ENGINEER								
APPROVED			TYPE 6SGV	CROSS REF 101		SHEET 1 of 4	PAGE 1-49	

REF 83214810

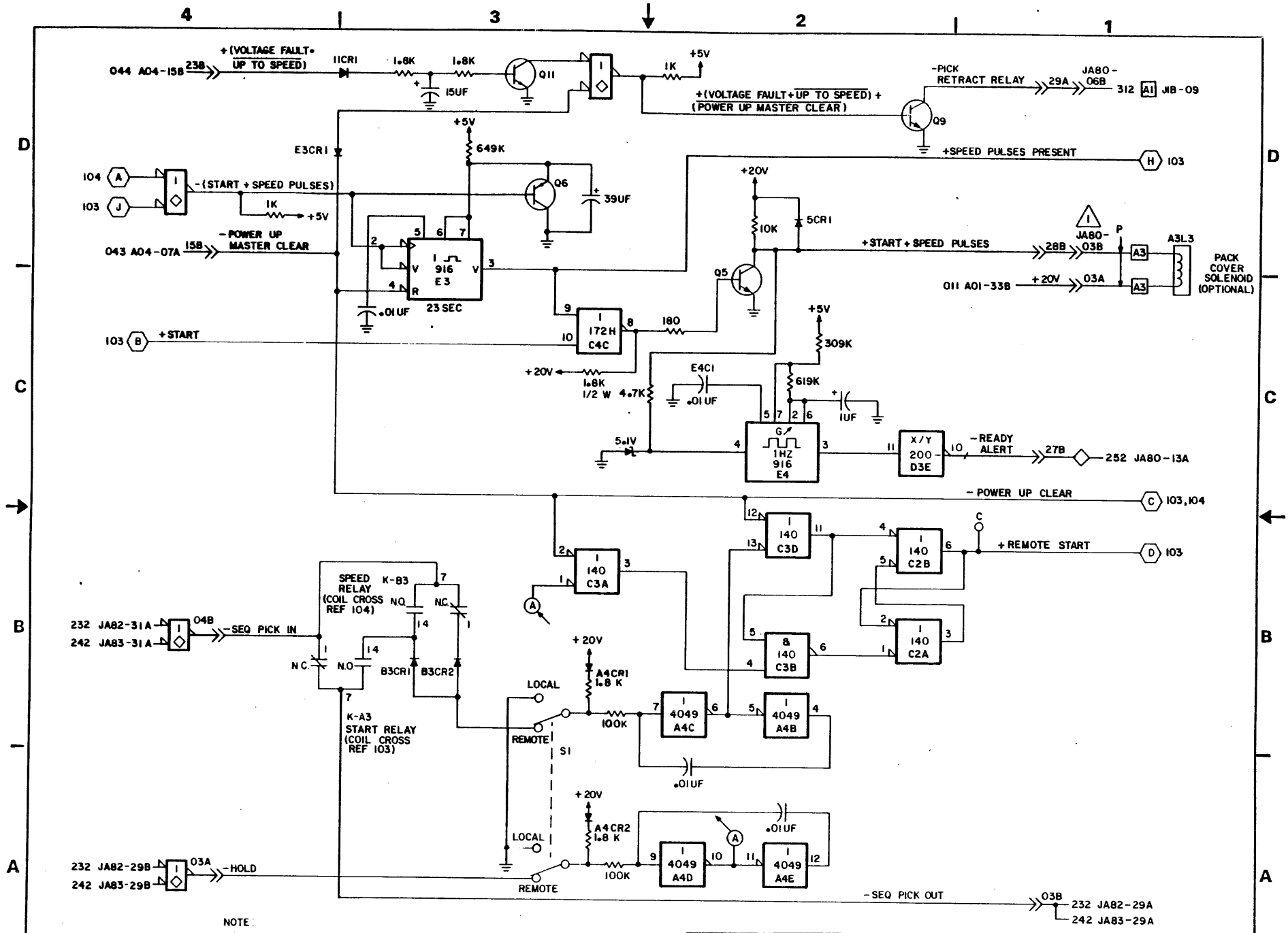

NOTE:

1 REFER TO CROSS REFERENCE NUMBER 341 FOR CABLING INFORMATION

CONTROL DATA NORMANDALE DIVISION	POWER SEQUENCING, READY ALERT, SPEED PULSES (60 PIN I/O) LOC A2A10	CODE IDENT 19333	C	83322240	T	P
		CROSS REF NO 102		SHEET 2	PAGE 1-50	

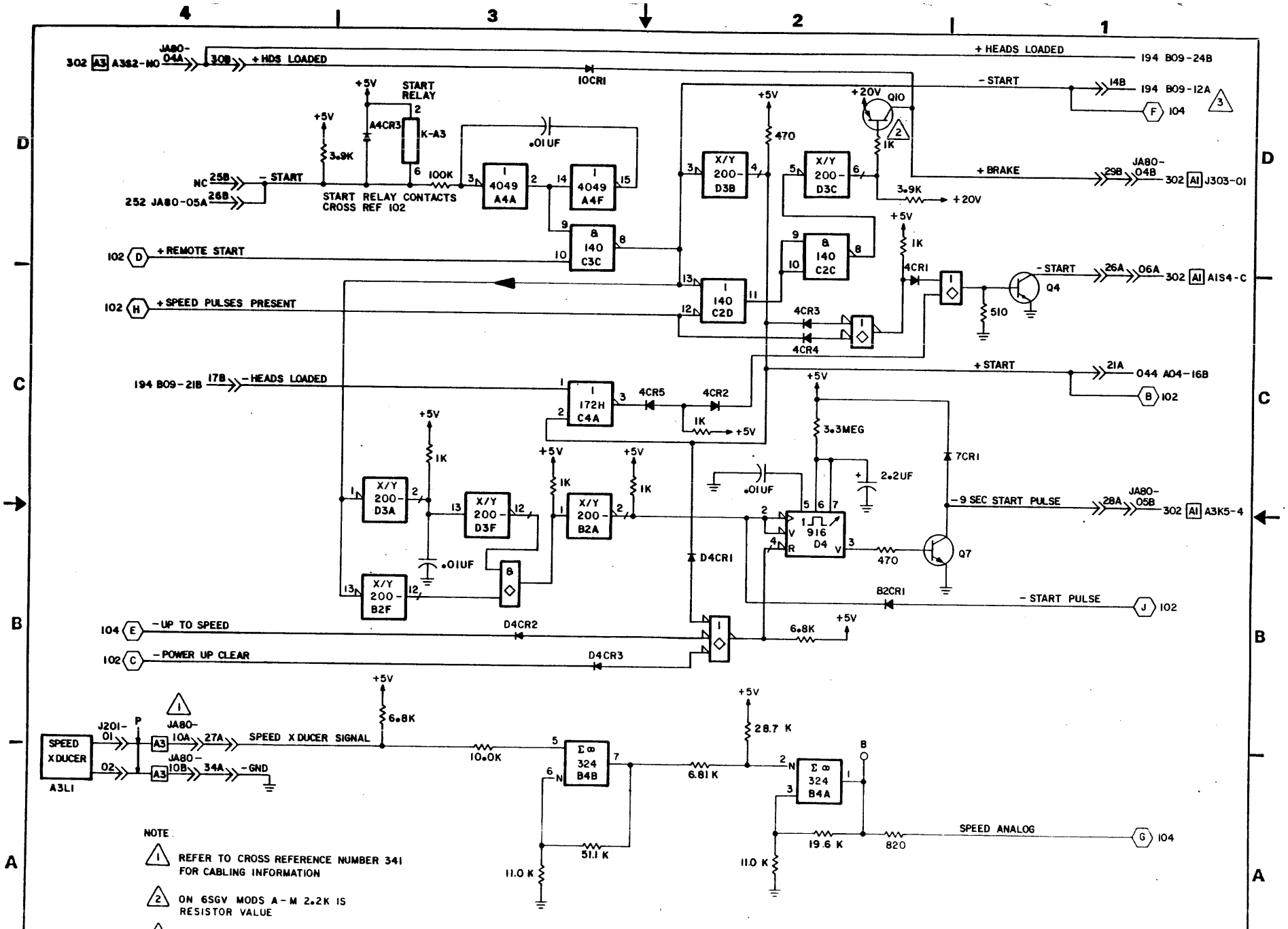

NOTE:

1. REFER TO CROSS REFERENCE NUMBER 341 FOR CABLING INFORMATION
2. ON 6SGV MODS A-M 2.2K IS RESISTOR VALUE
3. TO B0802A FOR BK5C1E/F SEE CROSS REF. 121

CONTROL DATA CORPORATION NORMANDALE DIVISION	START, BRAKING CONTROL (60 PIN I/O) LOC: A2A10	CODE IDENT 19333	C	83322240	T	N
		CROSS REF NO 103		SHEET 3	PAGE 1-51	

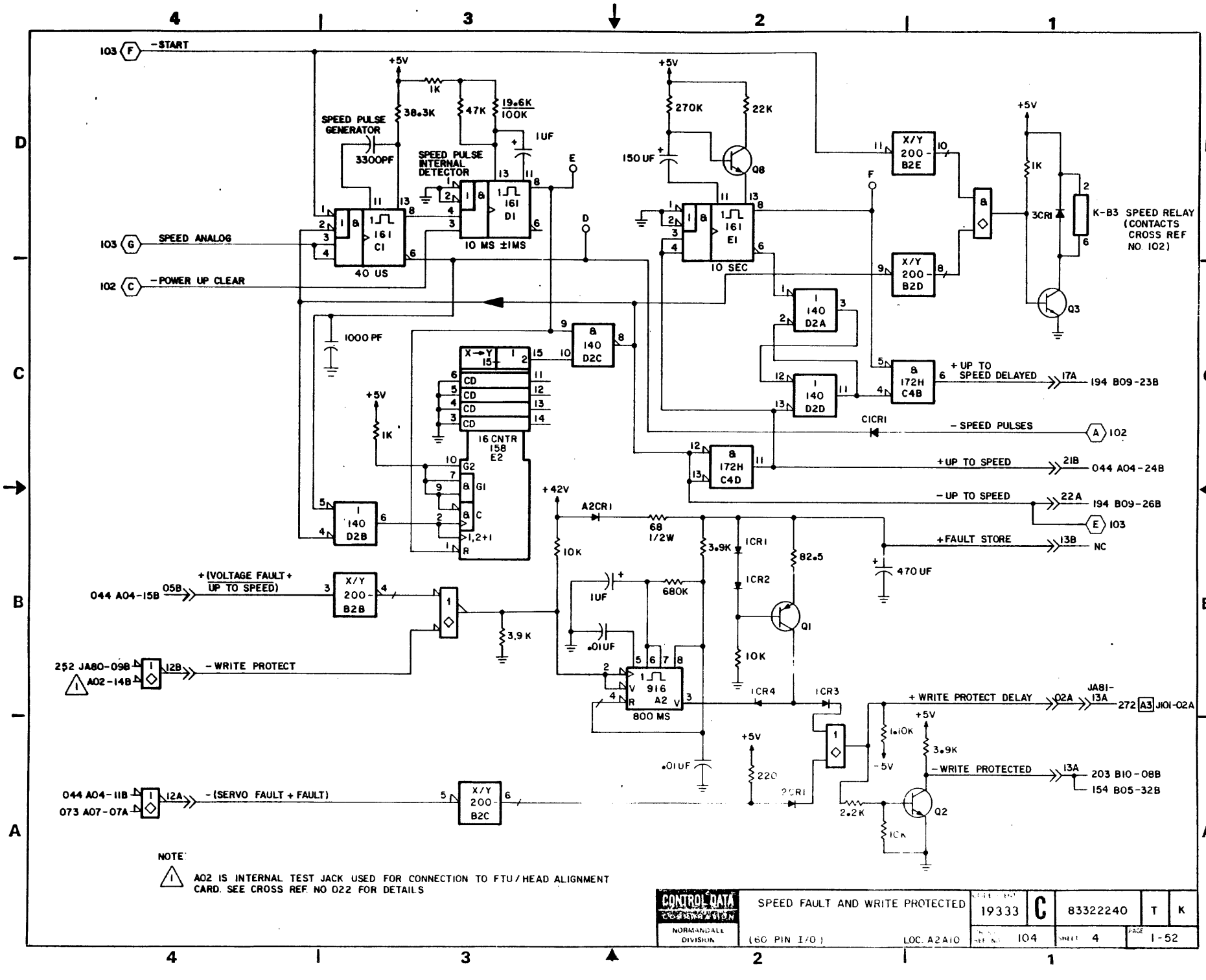

NOTE:

1 A02 IS INTERNAL TEST JACK USED FOR CONNECTION TO FTU/HEAD ALIGNMENT CARD. SEE CROSS REF NO 022 FOR DETAILS

CONTROL DATA CORPORATION NORMANDALE DIVISION	SPEED FAULT AND WRITE PROTECTED (60 PIN I/O)	LOC. A2A10	19333	C	83322240	T K
			104	4	1-52	

REVISION STATUS OF SHEETS

1	2	3	4						1	2	3	4							
A	A	A	A						W	W	W	W							
B	B	B	B						Y	Y									
C	C	C	C						AA		AA								
D	D	D	D						AB		AB								
E	E	E	E						AC		AC								
F	F	F	F																
G	G	G	G																
H	H	H	H																
J	J	J	J																
K	K	K	K																
L	K	L	K																
M	K	M	K																
N	K	N	K																
P	P	N	K																
R	R	R	R																
S	S	S	S																
T	T	S	S																
U		U																	
V	V	V																	

LOCAL / REMOTE SWITCH
ON CARD EDGE

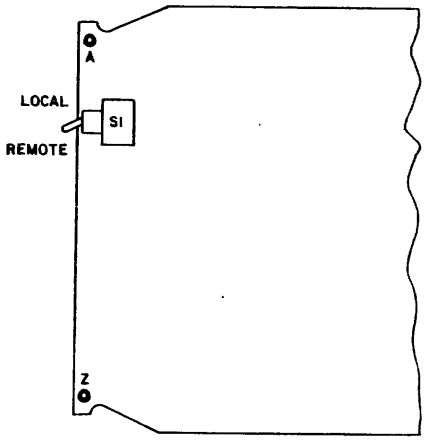

REVISIONS

REV	ECO	DESCRIPTION	DRFT	DATE	CHK'D
A	PE23000	RELEASED	MLZ	[illegible]	
B	PE48296	ERR CORR	MA	11-17-76	
C	PE48402	ERROR CORRECTIONS	VG	1-5-77	
D	PE48445	PREVENT IMPROPER HEAD LOADING	UH	2-7-77	
E	PE48523	ERROR CORRECTION	SB	4-6-77	
F	PE48652	DELETE E4R3, CHANGE Q5 TO NN3569	DM	5-14-77	
G	PE48675	ERROR CORRECTION	DM	7-7-77	
H	PE48932	ADD ISOLATION DIODE TO +20V POWER	DM	11-29-77	
J	PE55377	REV PC BOARD & COMPONENTS	A A O	8-14-78	
K	PE55370	ERROR CORRECTION	A A O	8-10-78	
L	PE55865	UPDATE SCHEMATICS	JS	7-20-79	
M	PE55854	DOWN GRADING OF 80 MB TO 40 MB SMD	TH	8-24-79	
N	PE55928	INCREAS RES VALUE	CB	10-12-79	
P	PE60016	LOGIC DIA UP LATE	TH	1-8-	
R	PE60142	IMPROVE 6S6V & BS6V	JH	3-13-80	
S	PE60396	6SGV DES. IMPROV	MF	3-14-80	
T	PE60445	CHG RES ON B STOP TIME	MF	3-18-80	
U	DJ00137	CHG SPEED	MJ	5-28-83	
V	DJ00293	CHG Q10	MJ	5-25-83	
W	DJ22000	TRANSFER FROM PE	MJ	5-25-83	
Y	DJ00361	CHG 6S6V & BS6V	MJ	5-25-83	
AA	DJ00558	ADD RESISTOR	JG	7-24-84	
AB	DJ00639	CHG RESISTOR _SGV	JG	7-24-84	
AC	DJ00668	CHG RESISTOR/TSTR _SGV	JG	7-24-84	

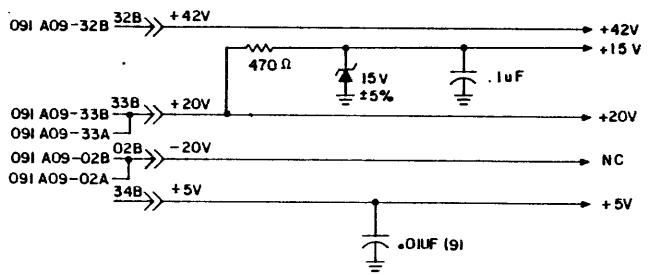

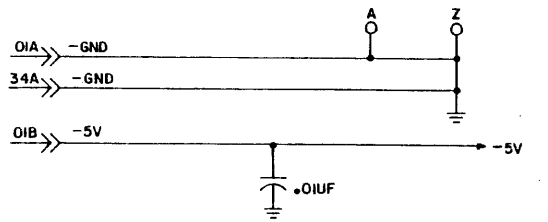

THIS SET USED FOR 6SGV REV V THRU AM (60 PIN I/O)

DRAWN	[illegible]	CONTROL DATA	INTERLOCKS AND SPEED DETECTOR DIAGRAMS	CODE IDENT 19333	C	83322240	Z AC
CHECKED		NORMANDALE DIVISION					
ENGINEER	[illegible]		TYPE 6SGV LOC A2A10	CROSS REF NO 101		SHEET 1 OF 4	TAG 1-521
APPROVED							

REF: 83214810

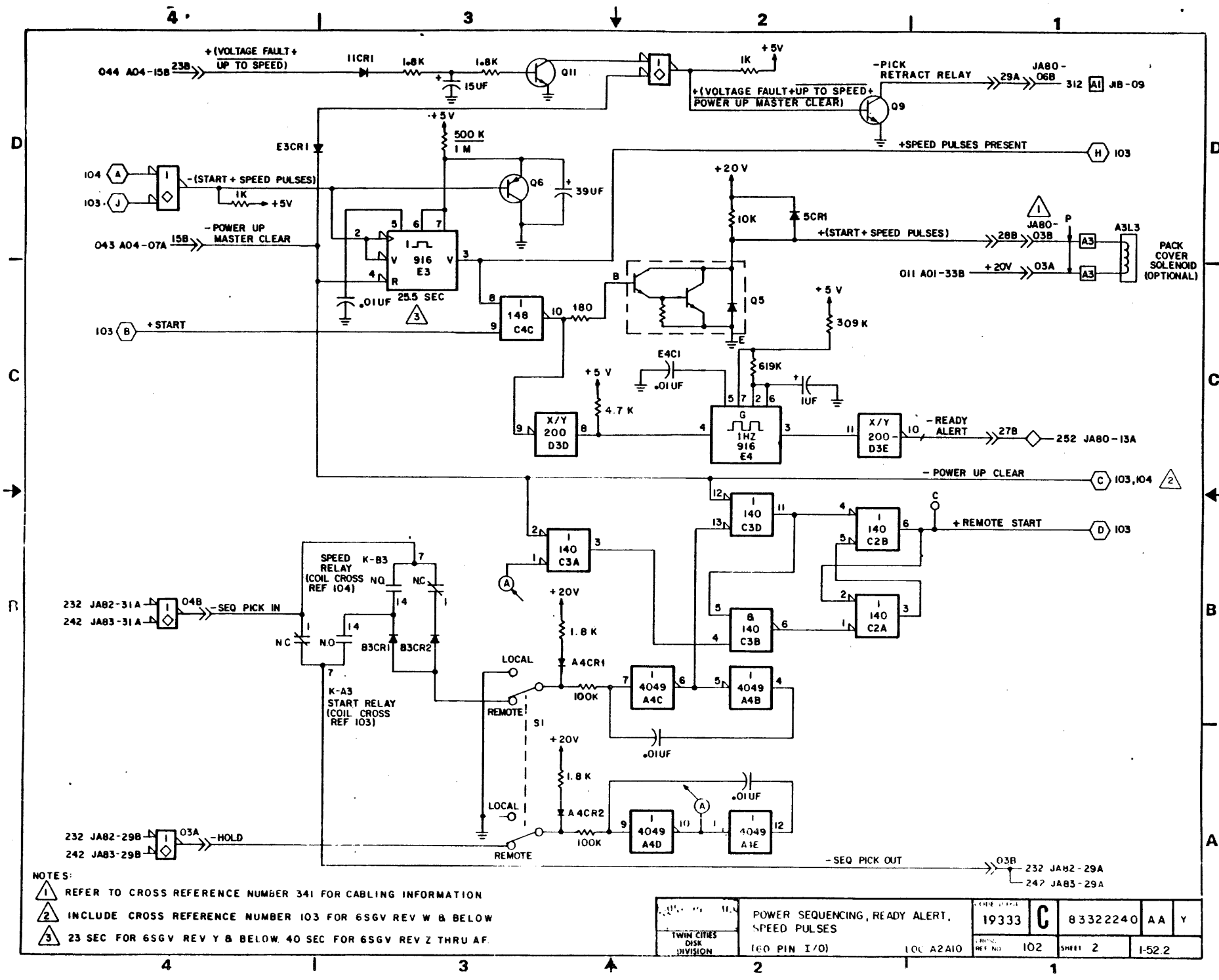

NOTES:

1. REFER TO CROSS REFERENCE NUMBER 341 FOR CABLING INFORMATION
2. INCLUDE CROSS REFERENCE NUMBER 103 FOR 6SGV REV W & BELOW
3. 23 SEC FOR 6SGV REV Y & BELOW. 40 SEC FOR 6SGV REV Z THRU AF.

TWIN CITIES DISK DIVISION	POWER SEQUENCING, READY ALERT, SPEED PULSES (60 PIN I/O) LOC A2A10	19333	C	8332240	AA	Y
		DRG. REF. NO. 102		SHEET 2		1-52.2

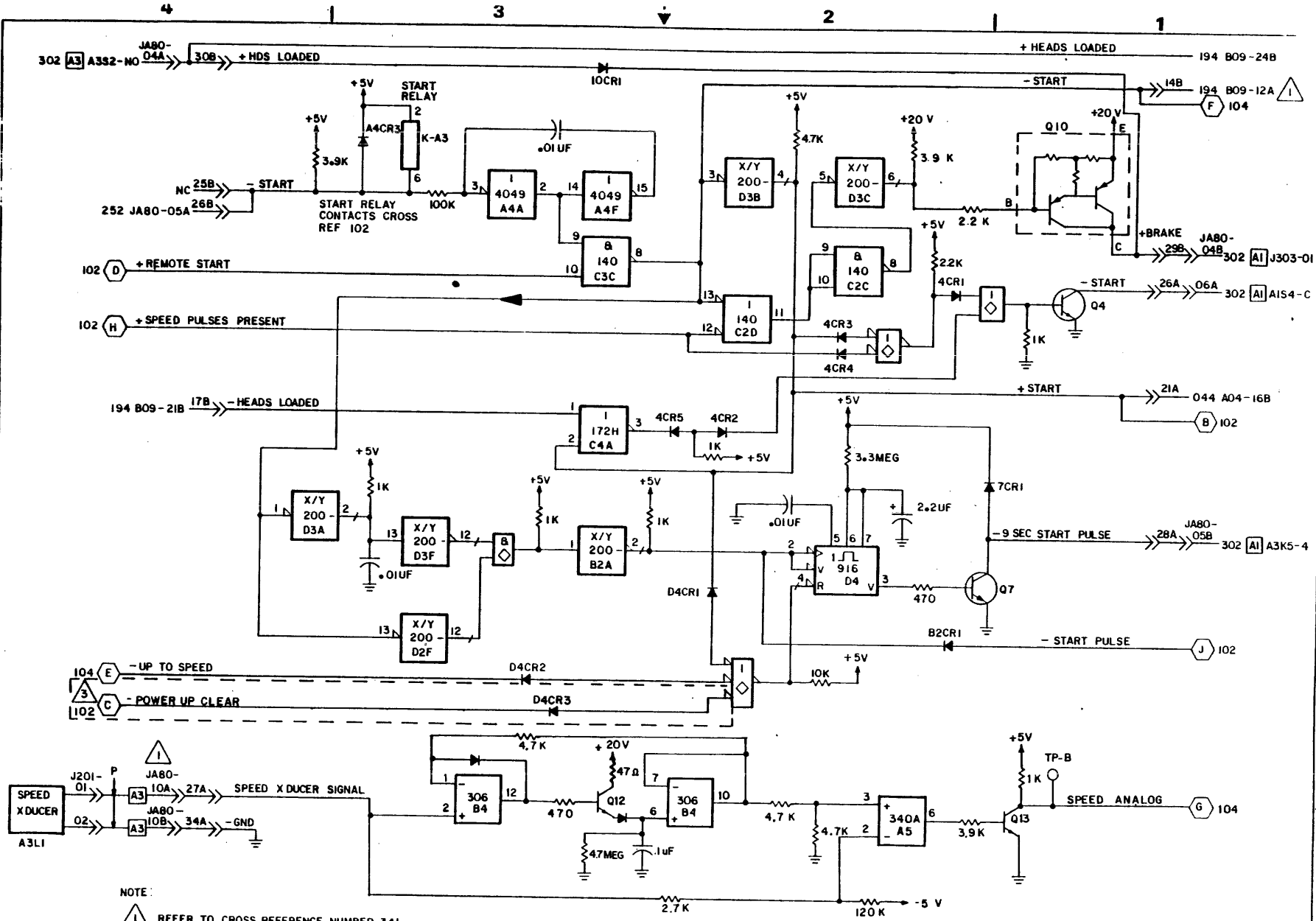
302 A3 A3S2-NO
JA80-04A
30B
+HDS LOADED
10CR1
+HEADS LOADED
194 B09-24B
-START
14B
194 B09-12A
F 104
START RELAY
A4CR3
K-A3
+5V
3.9K
.01UF
NC 25B
252 JA80-05A 26B
-START
START RELAY CONTACTS CROSS REF 102
100K
4049 A4A
4049 A4F
X/Y 200-D3B
X/Y 200-D3C
4.7K
3.9 K
+20 V
Q10
2.2 K
+BRAKE
JA80-04B
298
302 A1 J303-01
140 C3C
140 C2C
2.2K
4CR1
102 D +REMOTE START
102 H +SPEED PULSES PRESENT
140 C2D
4CR3
4CR4
-START
26A
06A
302 A1 A1S4-C
Q4
1K
194 B09-21B
17B
-HEADS LOADED
172H C4A
4CR5
4CR2
1K
+START
21A
044 A04-16B
B 102
3.3MEG
7CR1
X/Y 200-D3A
X/Y 200-D3F
X/Y 200-B2A
X/Y 200-D2F
.01UF
2.2UF
-9 SEC START PULSE
28A
JA80-05B
302 A1 A3K5-4
916 D4
D4CR1
470
Q7
B2CR1
-START PULSE
J 102
104 E -UP TO SPEED
102 C -POWER UP CLEAR
D4CR2
D4CR3
10K
SPEED XDUCER
A3L1
J201-01
02
JA80-10A
10B
27A
34A
SPEED XDUCER SIGNAL
-GND
4.7K
+20V
47Ω
306 B4
Q12
470
4.7MEG
1uF
4.7 K
340A A5
3.9K
Q13
TP-B
SPEED ANALOG
G 104
2.7K
120 K
-5 V
NOTE:
1 REFER TO CROSS REFERENCE NUMBER 341 FOR CABLING INFORMATION
2 TO B08 02A FOR BK5 C1 E/F SEE CROSS REF 121
3 APPLIES TO 6SGV REV W & BLW ONLY.
CONTROL DATA CORPORATION
NORMANDALE DIVISION
START, BRAKING CONTROL
(60 PIN I/O)
LOC A2A10
19333
C
83322240
Z
AC
103
SHEET 3
1-523

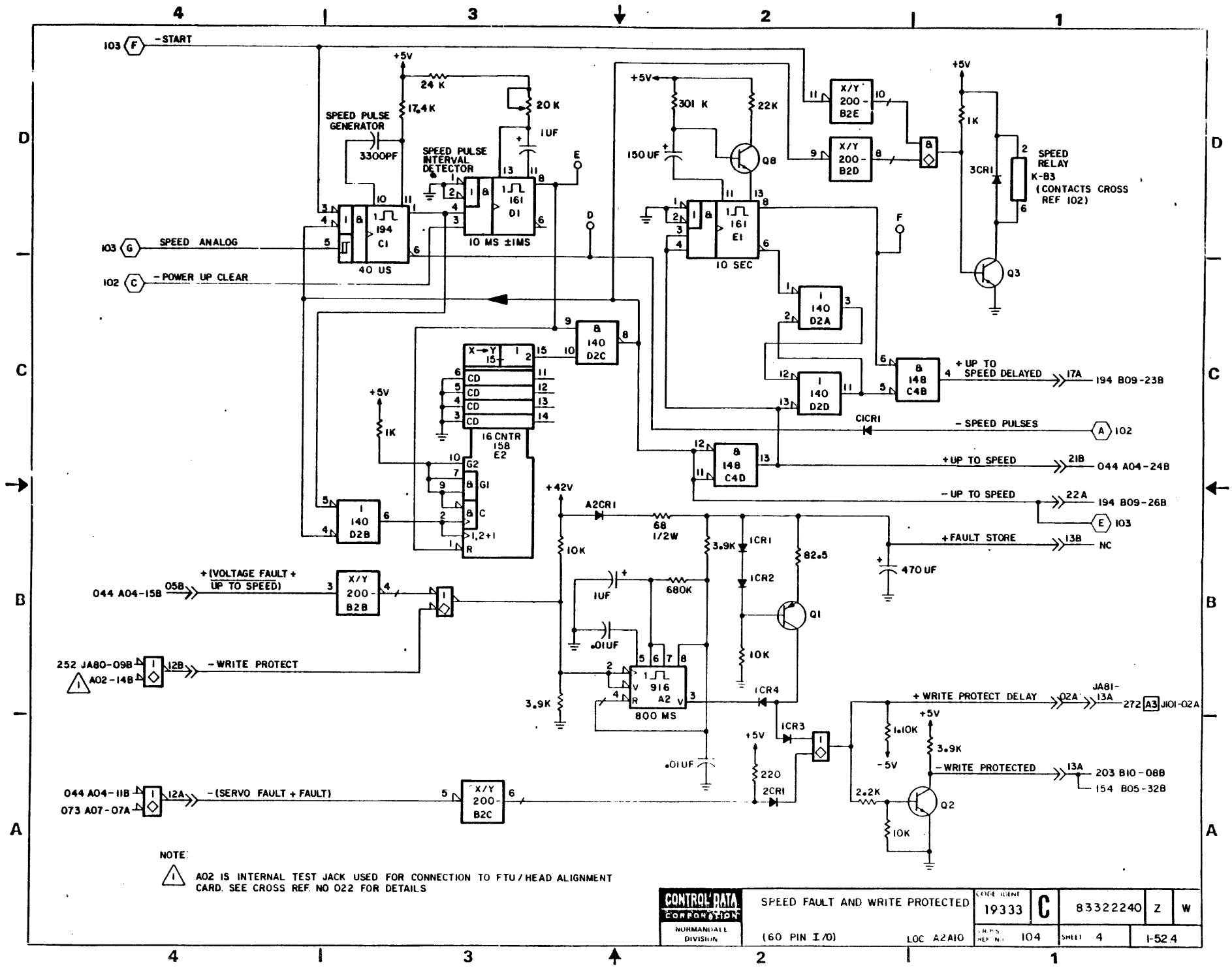

NOTE:

1. A02 IS INTERNAL TEST JACK USED FOR CONNECTION TO FTU/HEAD ALIGNMENT CARD. SEE CROSS REF. NO 022 FOR DETAILS

CONTROL DATA CORPORATION NORMANDALE DIVISION	SPEED FAULT AND WRITE PROTECTED (60 PIN I/O) LOC A2A10	CODE IDENT 19333	C	83322240	Z	W
		CROSS REF NO 104		SHEET 4		1-52.4

REVISIONS					
REV.	ECO.	DESCRIPTION	DRFT	DATE	CHK'D
	DJ23000	SEE MF HIST FOR REVS A THRU AC	JG	6-12-84	JL
AD	DJ00728	LOGIC DIAGRAM CHANGE 6SGV	JG	6-12-84	JL
AE	DJ00728A	LOGIC DIAGRAM CHANGE	JHM	2-14-86	

UNUSED LOGIC ELEMENTS

ELEMENT TYPE	LOCATION	OUTPUT PIN(S)
20JLS	C5A	2
MPQ 2222	QP-E4	C14, B13, E12

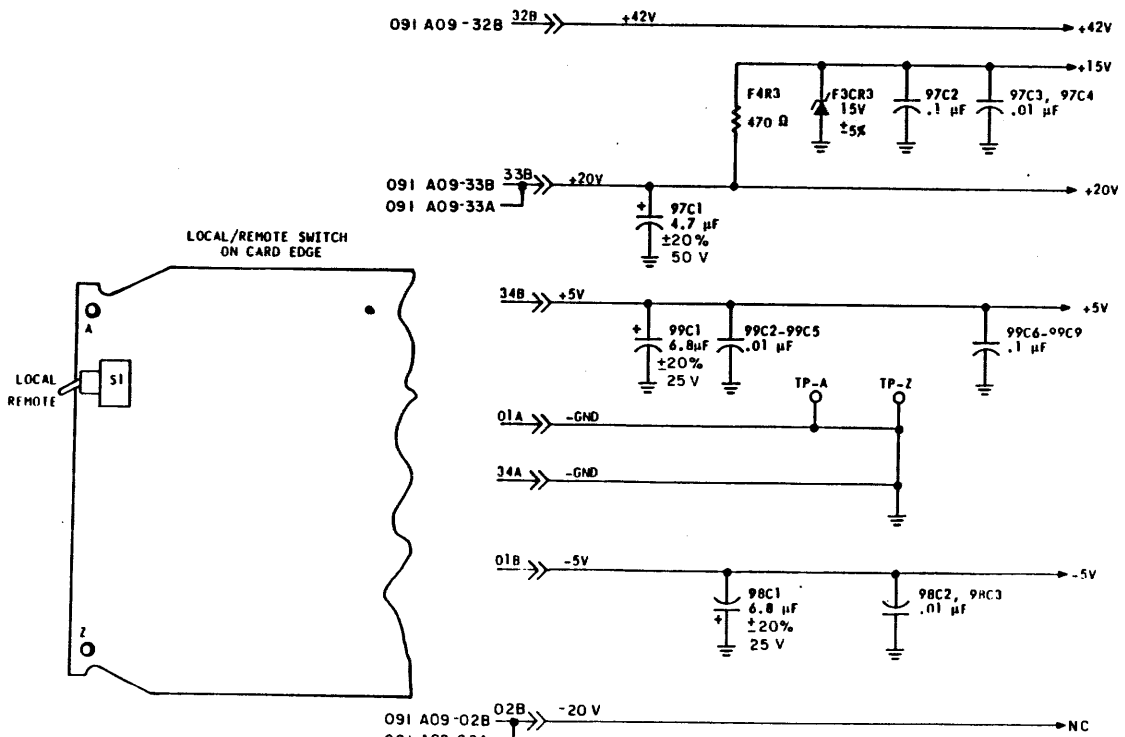

NOTES

1. DWG'S WHERE TAB NUMBERS CREATE NEW COVER SHEET, TABS 00-99 ARE RESERVED

THIS SET USED FOR 6SGV REV AN & ABOVE

DRAWN	M A JAHN	02-83	MAGNETIC PERIPHERALS INC.	INTERLOCKS AND SPEED DETECTOR DIAGRAMS	TWIN CITIES DISK DIVISION	C	83322240	AA	AE
CHECKED									
ENGINEER	B. WEIST	5-23-84		TYPE 6 SGV (60 PIN I/O) LOC: A2A10	EQUIPMENT 19333	DRWG REF NO 101	SHEET 1 OF 5	SIZE I-525	
APPROVED									

REF: 83214810

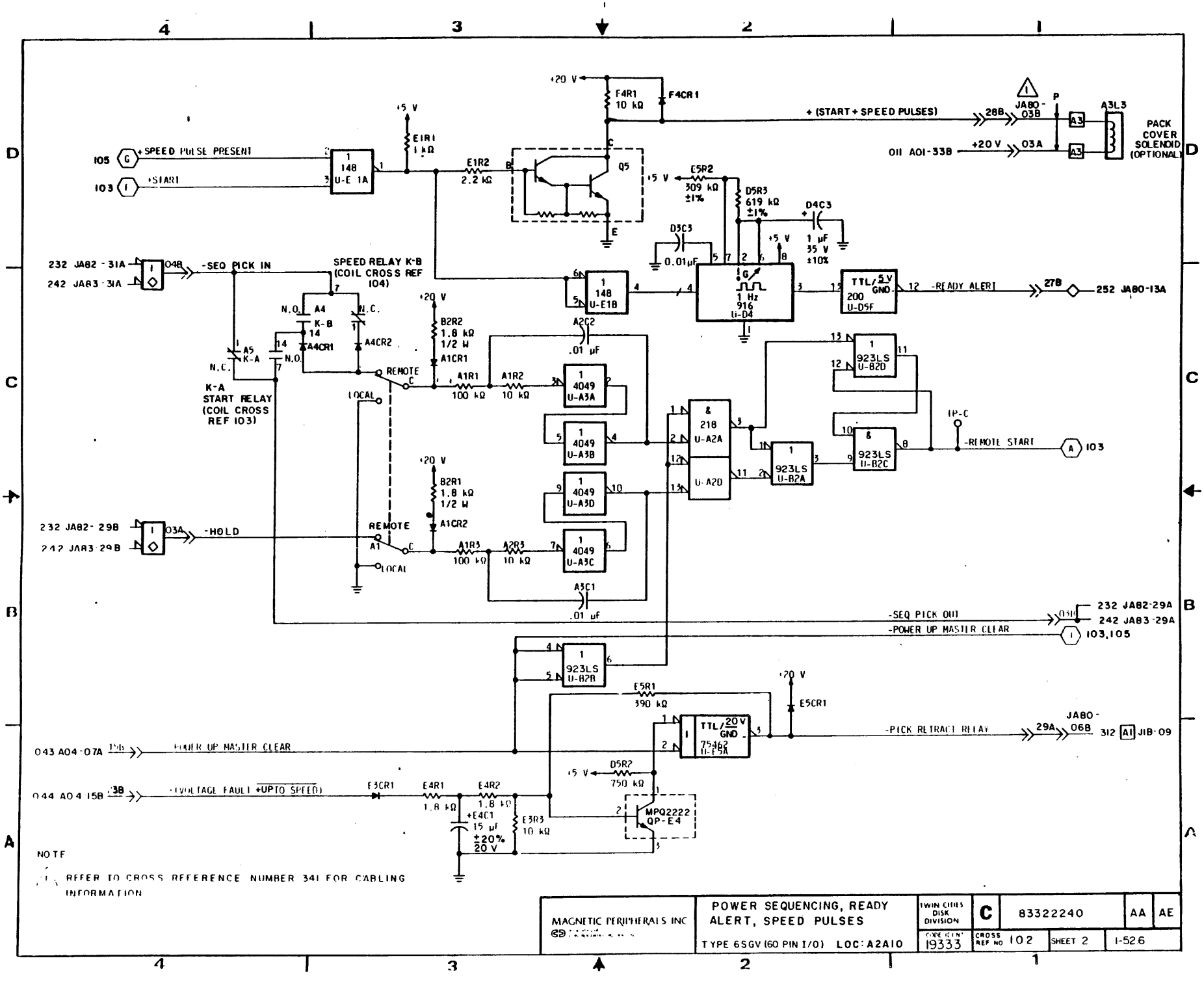
+20 V
F4R1 10 kΩ
F4CR1
+5 V
E1R1 1 kΩ
105 +SPEED PULSE PRESENT
103 +START
E1R2 2.2 kΩ
Q5
+ (START + SPEED PULSES)
28B
JA80-03B
P
A3L3
PACK COVER SOLENOID (OPTIONAL)
011 A01-33B
+20 V
03A
E5R2 309 kΩ ±1%
D5R3 619 kΩ ±1%
D4C3 1 µF 35 V ±10%
D3C3 0.01µF
232 JA82-31A
242 JA83-31A
04B
-SEQ PICK IN
SPEED RELAY K-B (COIL CROSS REF 104)
N.O. A4 K-B 14
N.C.
A4CR2
A5 K-A
N.C.
N.O.
K-A START RELAY (COIL CROSS REF 103)
REMOTE
LOCAL
B2R2 1.8 kΩ 1/2 W
A1CR1
A1R1 100 kΩ
A1R2 10 kΩ
A2C2 .01 µF
TTL/5V GND 200 U-D5F
-READY ALERT
27B
252 JA80-13A
1 Hz 916 U-D4
923LS U-B2D
923LS U-B2C
923LS U-B2A
923LS U-B2B
218 U-A2A
U-A2D
4049 U-A3A
4049 U-A3B
4049 U-A3D
4049 U-A3C
TP-C
-REMOTE START
A 103
B2R1 1.8 kΩ 1/2 W
A1CR2
A1R3 100 kΩ
A2R3 10 kΩ
A3C1 .01 µF
232 JA82-29B
242 JA83-29B
03A
-HOLD
-SEQ PICK OUT
-POWER UP MASTER CLEAR
03B
232 JA82-29A
242 JA83-29A
1 103,105
E5R1 390 kΩ
E5CR1
TTL/20V GND 75462 U-E5A
-PICK RETRACT RELAY
29A
JA80-06B
312 A1 JIB-09
043 A04-07A 15B
POWER UP MASTER CLEAR
044 A04-15B 13B
-VOLTAGE FAULT +UPTO SPEED
E3CR1
E4R1 1.8 kΩ
E4R2 1.8 kΩ
+E4C1 15 µf ±20% 20 V
E3R3 10 kΩ
D5R2 750 kΩ
MPQ2222 QP-E4
NOTE
1. REFER TO CROSS REFERENCE NUMBER 341 FOR CABLING INFORMATION
MAGNETIC PERIPHERALS INC
POWER SEQUENCING, READY ALERT, SPEED PULSES
TYPE 6SGV (60 PIN I/O) LOC: A2A10
TWIN CITIES DISK DIVISION
C
83322240
AA
AE
CODE IDENT 19333
CROSS REF NO 102
SHEET 2
1-526

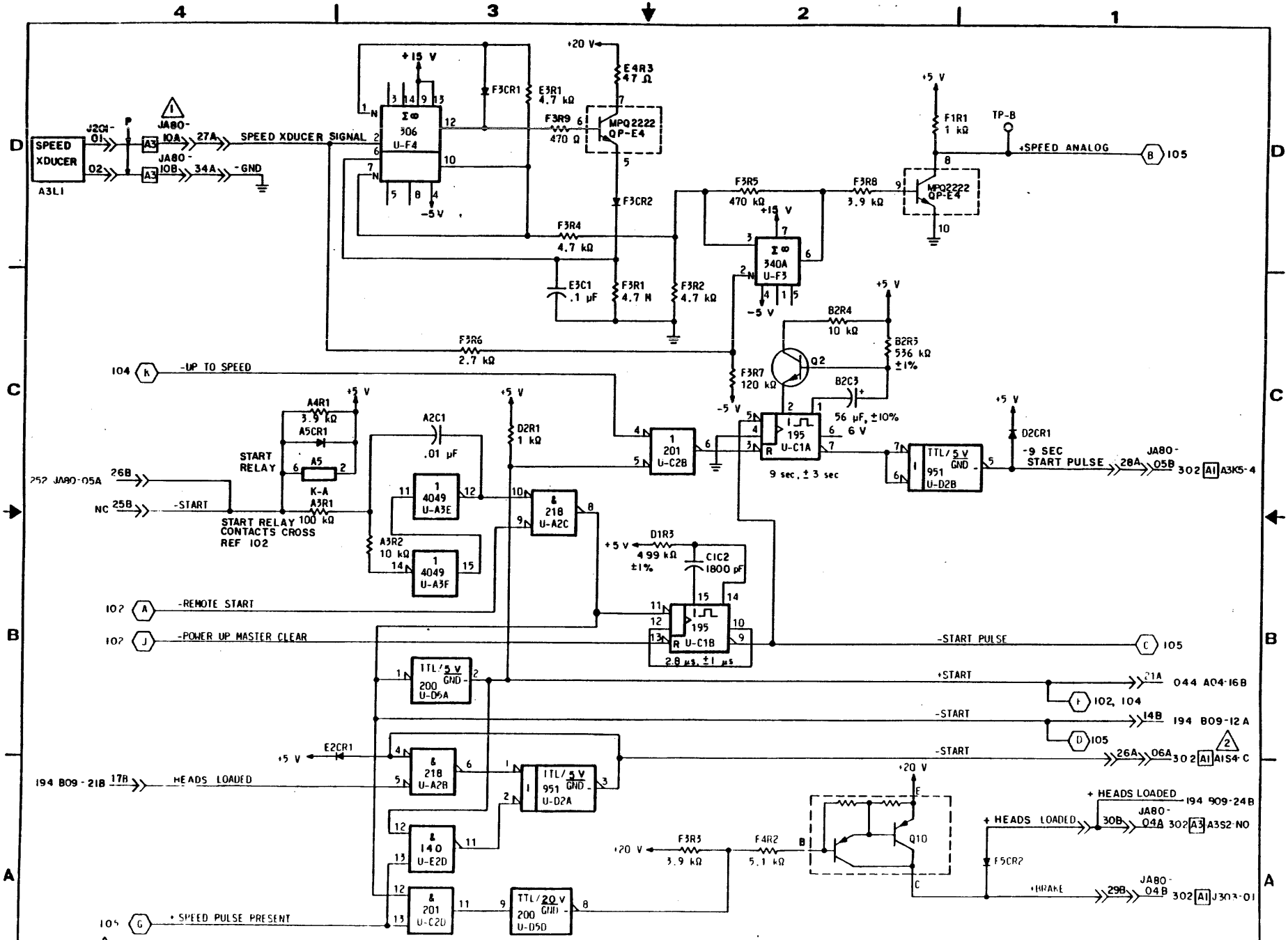

NOTE

1. REFER TO CROSS REFERENCE NUMBER 341 FOR CABLING INFORMATION
2. TO B08-02A FOR BK5C1 E/F SEE CROSS REF 121

MAGNETIC PERIPHERALS INC	START, BRAKING CONTROL TYPE 6SGV (60 PIN I/O) LOC: A2A10	TWIN CITIES DISK DIVISION CODE IDENT 19333	C	83322240 CROSS REF NO 103	Z SHEET 3	AD 1-52.7

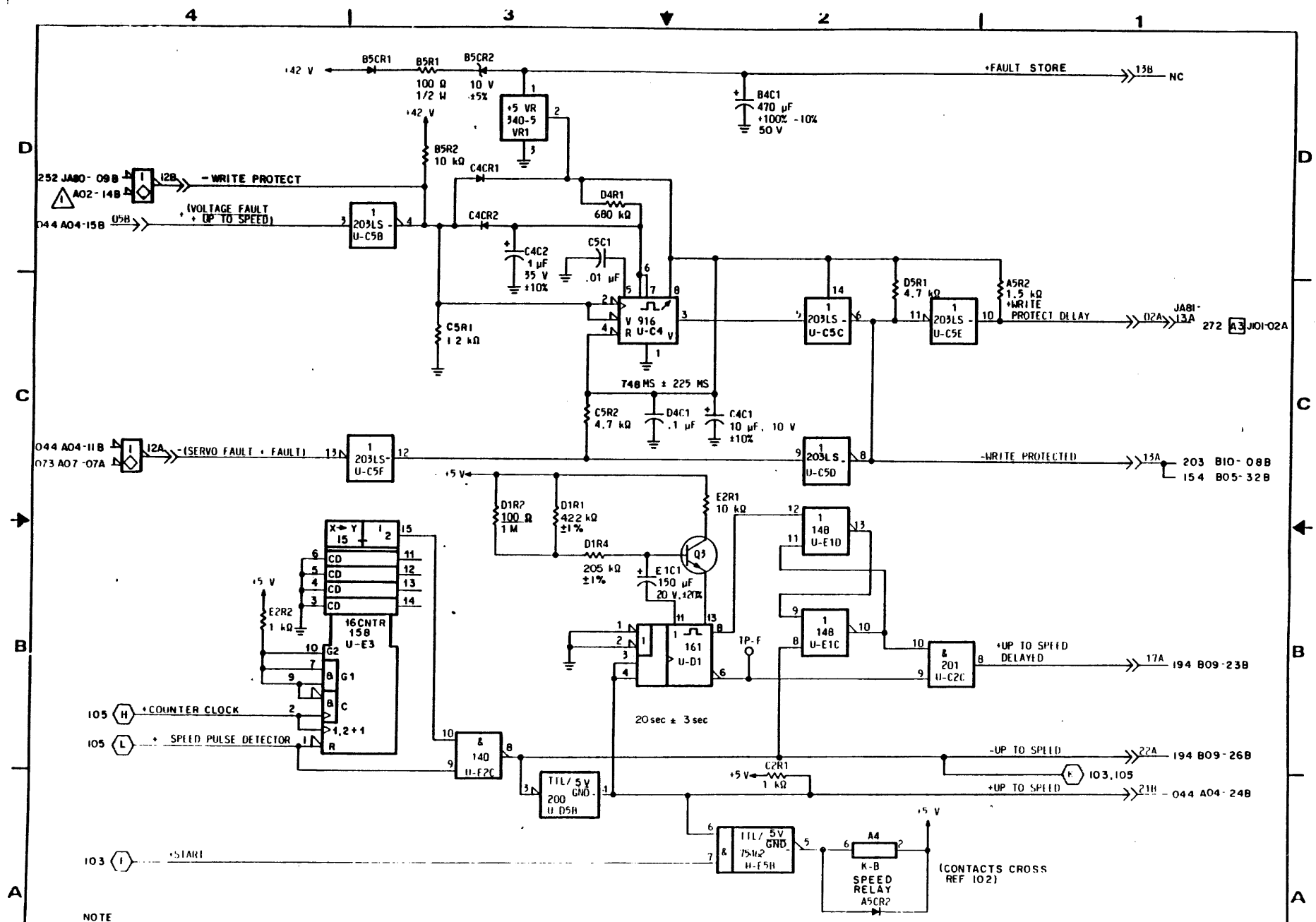

NOTE

(1) A02 IS INTERNAL TEST JACK USED FOR CONNECTION TO FTU/HEAD ALIGNMENT CARD SEE CROSS REF NO 022 FOR DETAILS

MAGNETIC PERIPHERALS INC	SPEED FAULT AND WRITE PROTECTED TYPE 6SGV (60 PIN I/O) LOC A2A10	TWIN CITIES DISK DIVISION	C	83322240	AA AE
		CODE IDENT 19333	CROSS REF NO 104	SHEET 4	I-52.8

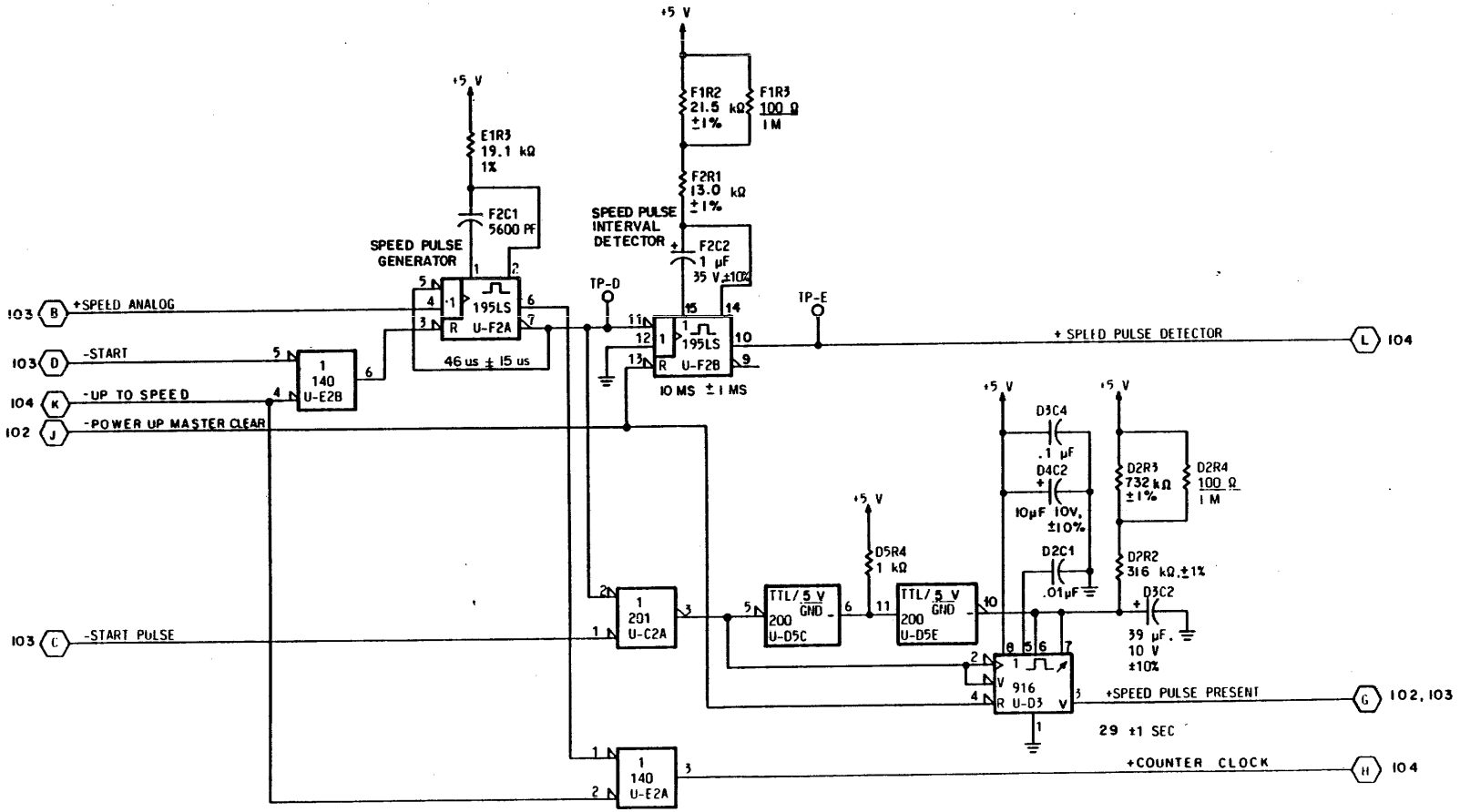

MAGNETIC PERIPHERALS INC	SPEED FAULT AND WRITE PROTECTED TYPE 6SGV (60 PIN I/O) LOC A2 A10	TWIN CITIES DISK DIVISION	C	83322240	AA	AE
		CODE IDENT 19333	CROSS REF NO 105	SHEET 5	1-52 9/10	

REVISION STATUS OF SHEETS

1	2	3	4	5	6	7	8	9	10	11	12	13	14	15	16	17	18	19	20
A	A	A	A																

REVISIONS

REV	ECO	DESCRIPTION	DRFT	DATE	CHK'D
A	DJ00399	VDE NEW CREATE	KKB	11-22-82	

UNUSED LOGIC ELEMENT

ELEMENT TYPE	LOCATION	OUTPUT PIN(S)
200	D3D	8

LOCAL/REMOTE SWITCH ON CARD EDGE

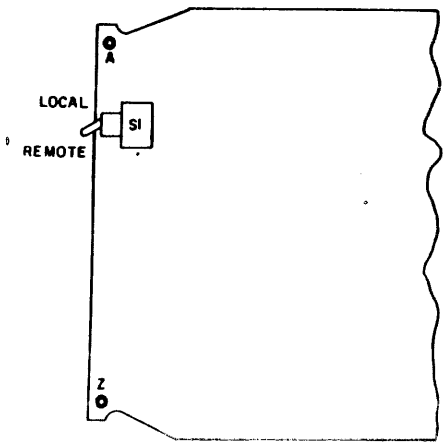

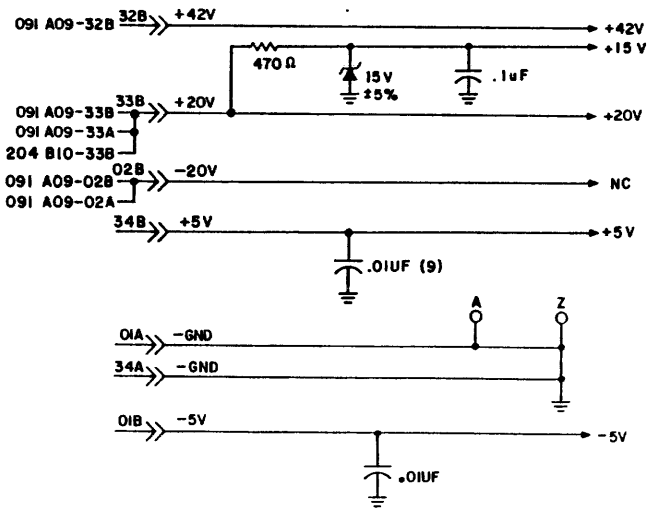

THIS SET USED FOR BK5C6D (60 PIN I/O)

DRAWN	K.BARTSCH	11-22-82
CHECKED		
ENGINEER		
APPROVED		

CONTROL DATA CORPORATION
SMALL DISK DIVISION

INTERLOCKS AND SPEED DETECTOR DIAGRAMS

TYPE 6SGV LOC A2A10

CODE IDENT				
19333	C	83322240	Z	A

CROSS REF NO. 101 | SHEET 1 OF 4 | PAGE 1-52 11

REF: 83214870

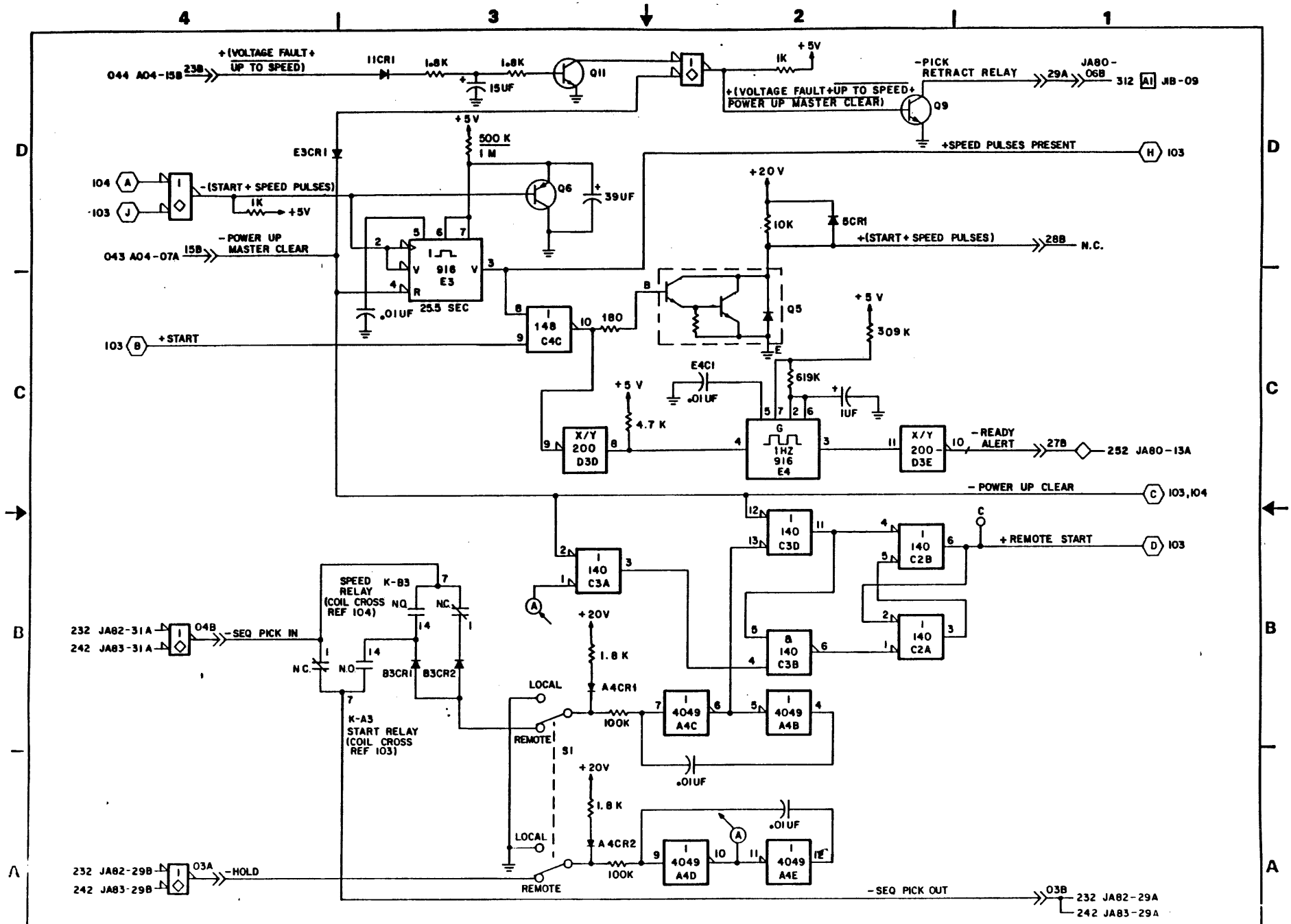

CONTROL DATA SMALL DISK DIVISION	POWER SEQUENCING, READY ALERT, SPEED PULSES (60 PIN I/O) LOC A2A10	CODE IDENT 19333	C	83322240	Z A
		CROSS REF NO 102		SHEET 2	1-52.12

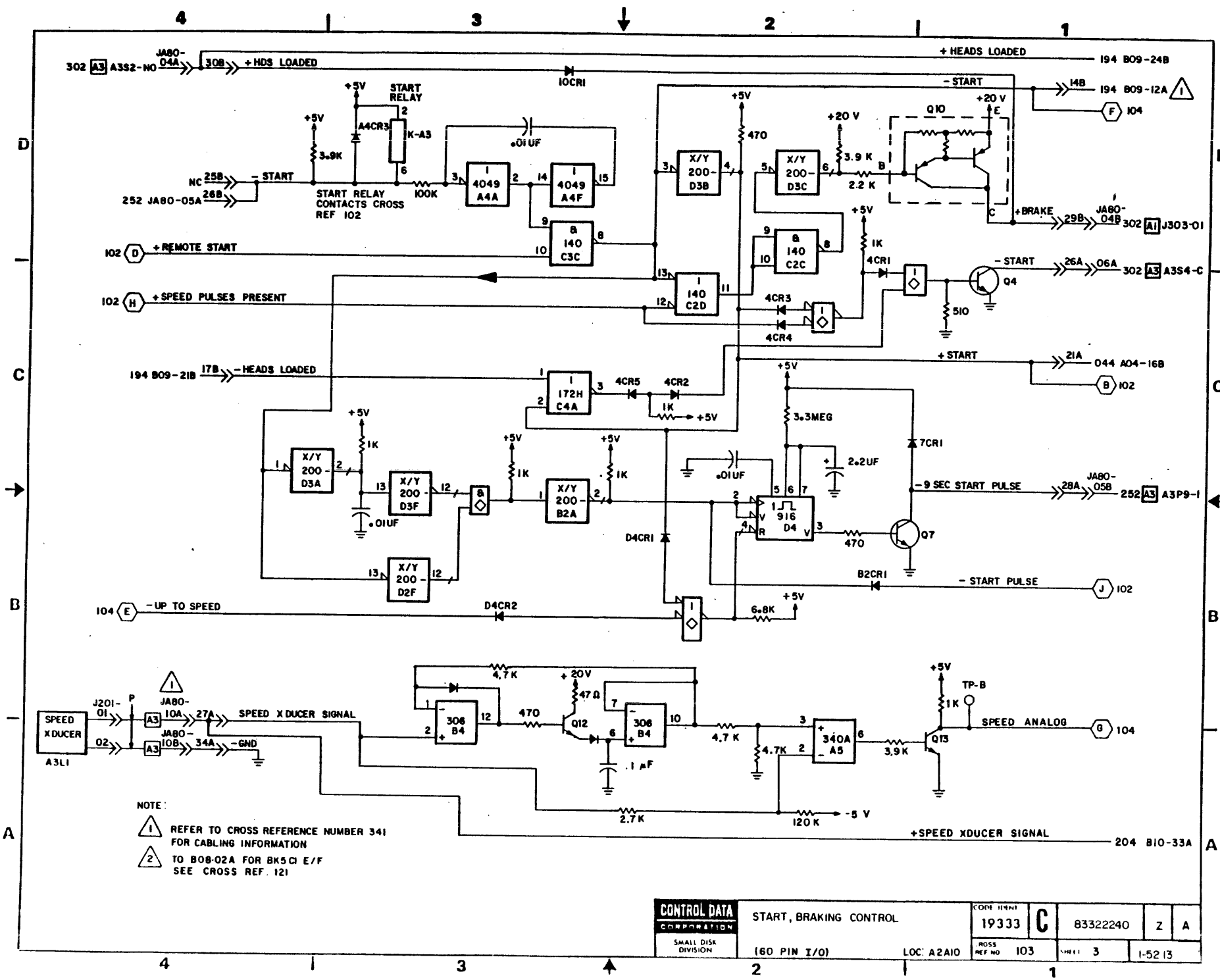

CONTROL DATA CORPORATION SMALL DISK DIVISION	START, BRAKING CONTROL (60 PIN I/O) LOC: A2A10	CODE IDENT 19333	C	83322240	Z	A
		CROSS REF NO 103	SHEET 3	1-52 13		

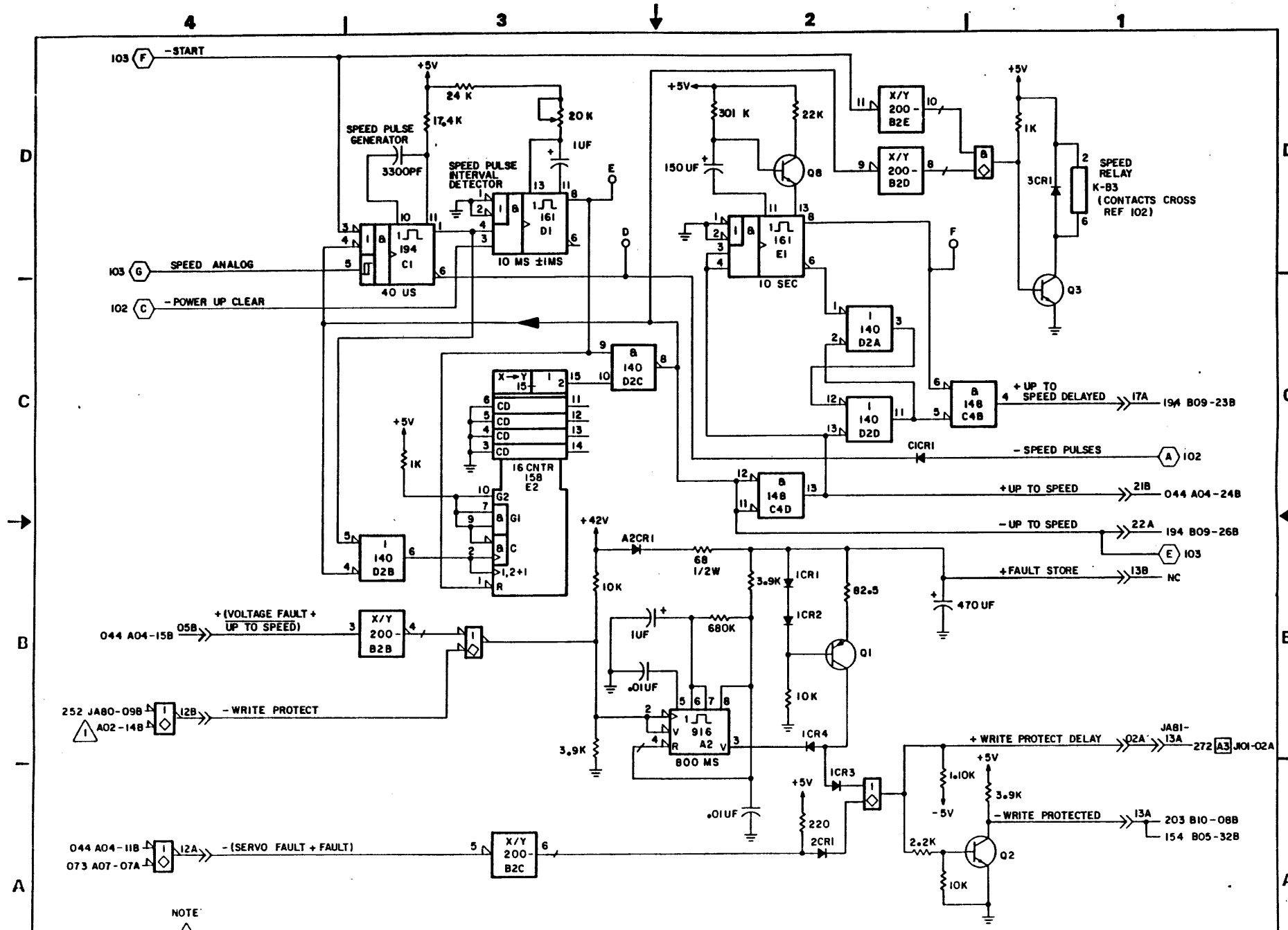

NOTE

1 A02 IS INTERNAL TEST JACK USED FOR CONNECTION TO FTU/HEAD ALIGNMENT CARD. SEE CROSS REF NO 022 FOR DETAILS

CONTROL DATA CORPORATION SMALL DISK DIVISION	SPEED FAULT AND WRITE PROTECTED (60 PIN I/O)	LOC A2A10	CODE IDENT 19333	C	83322240	Z	A
			CROSS REF NO 104		SHEET 4		1-52.14

REVISION STATUS OF SHEETS

1	2	3	4	5	6	7	8	9	10	11	12	13	14	15	16	17	18	19	20
A	A	A	A																
B			B																
C		C																	
D		D																	

CREATED FROM 83214810.

REVISIONS

REV.	ECO.	DESCRIPTION	DRFT	DATE	CHK'D
A	DJ00436	CREATE KSGV	MJ	2-10-83	
B	DJ00482	KSGV TEST SELECT	JG	7-25-84	
C	DJ00639	CHG RESISTOR _SGV	JG	7-25-84	
D	DJ00668	CHG RES/TSTR _SGV	JG	7-25-84	

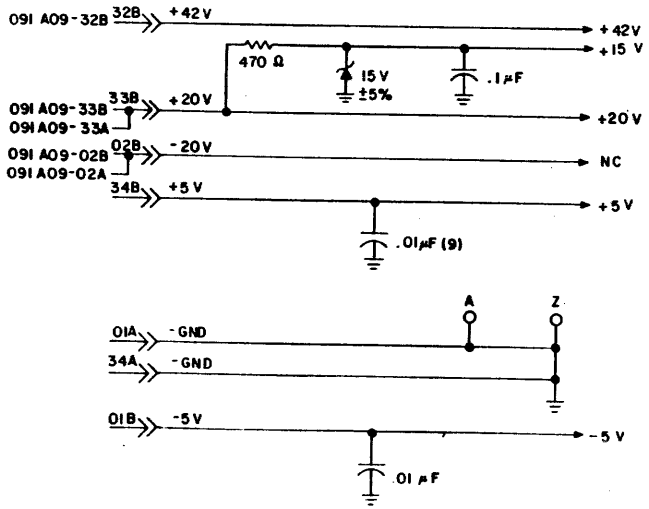

LOCAL/REMOTE SWITCH
ON CARD EDGE

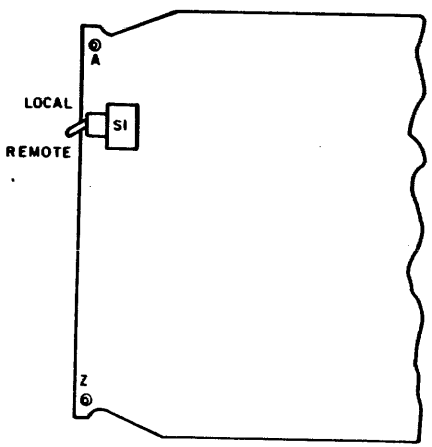

THIS SET USED FOR KSGV REV A & ABOVE BK5C4R/S (60 PIN I/O)

DRAWN	M A JAHN	85	MAGNETIC PERIPHERALS INC.	INTERLOCKS AND SPEED DETECTOR DIAGRAMS	NORMANDALE OPERATIONS	C	83322240	Z	D
CHECKED									
ENGINEER									
APPROVED				TYPE: KSGV LOC A2A10	CODE IDENT 19333	CROSS REF No 101	SHEET 1 OF 4	1-52.15

REF: 83215937

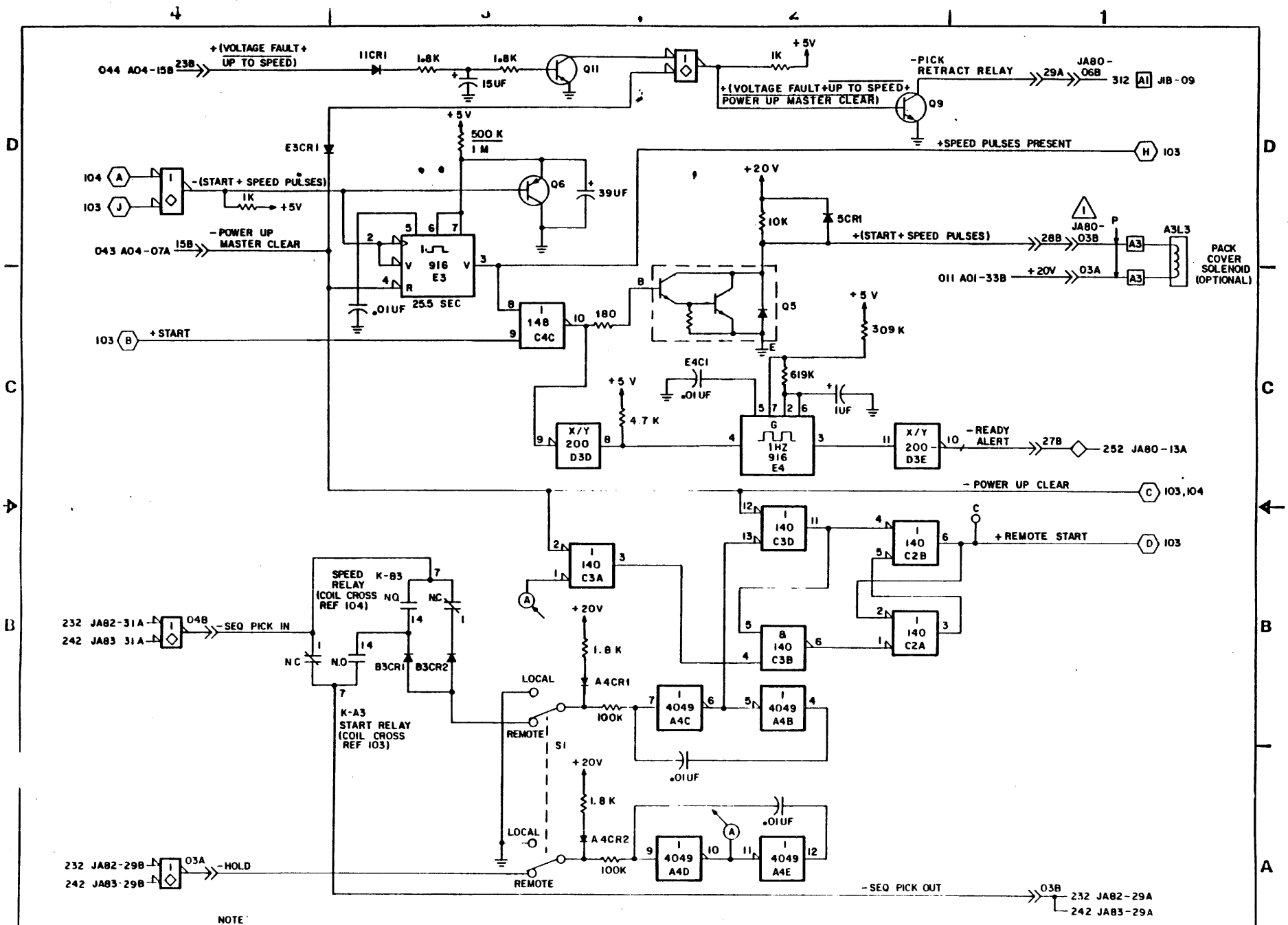

NOTE

1 REFER TO CROSS REFERENCE NUMBER 341 FOR CABLING INFORMATION

CONTROLDATA NORMANDALE DIVISION	POWER SEQUENCING, READY ALERT, SPEED PULSES (60 PIN I/O) LOC A2A10	CODE IDENT 19333	C	83322240	Z	A
		CROSS REF NO. 102		SHEET 2	1-52.16	

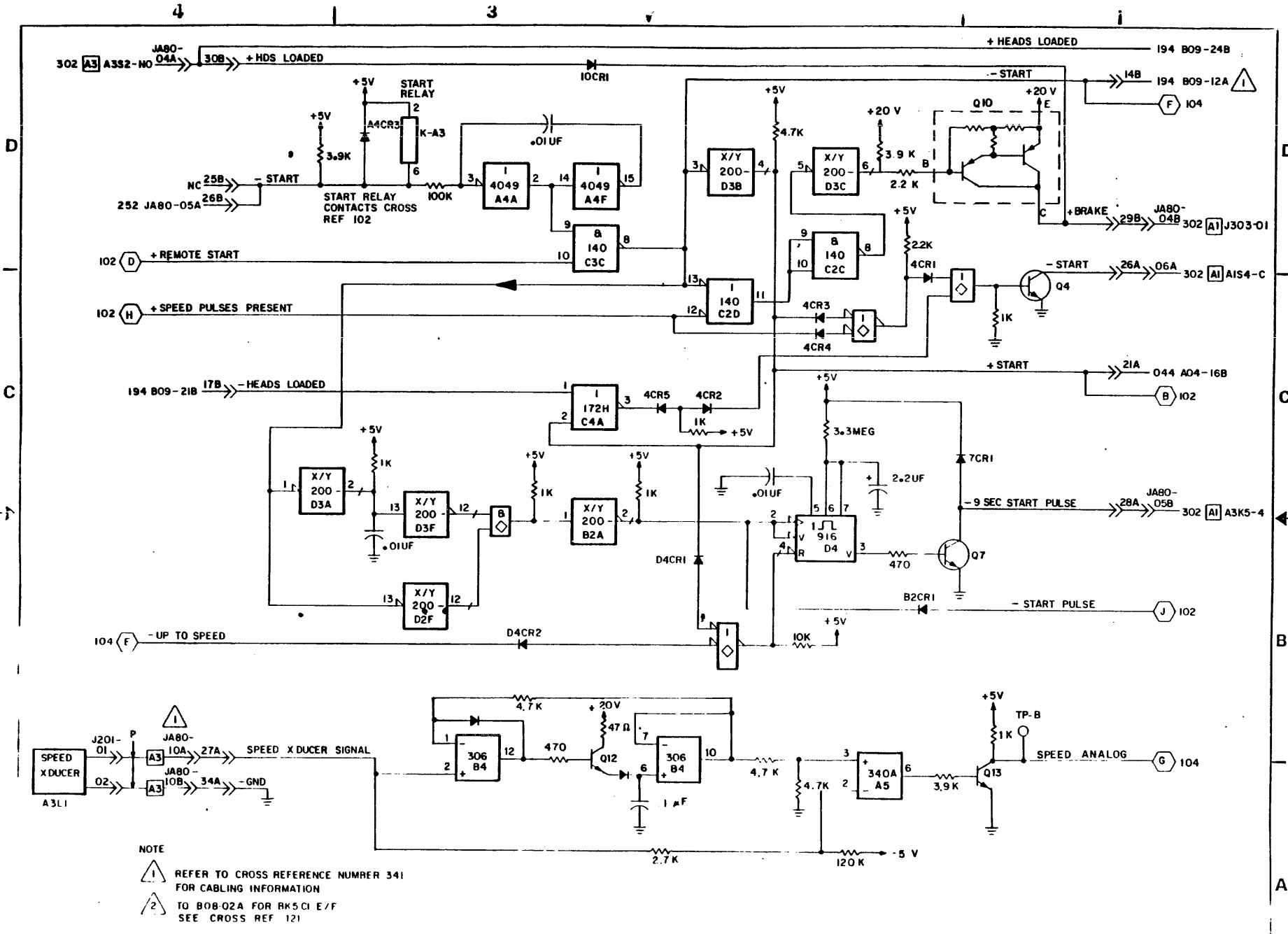

CONTROL DATA SCIENTIFIC NORMANDALE DIVISION

START, BRAKING CONTROL

(60 PIN I/O) LOC A2A10

19333	C	83322240	Z	D
103		3	1-52.17	

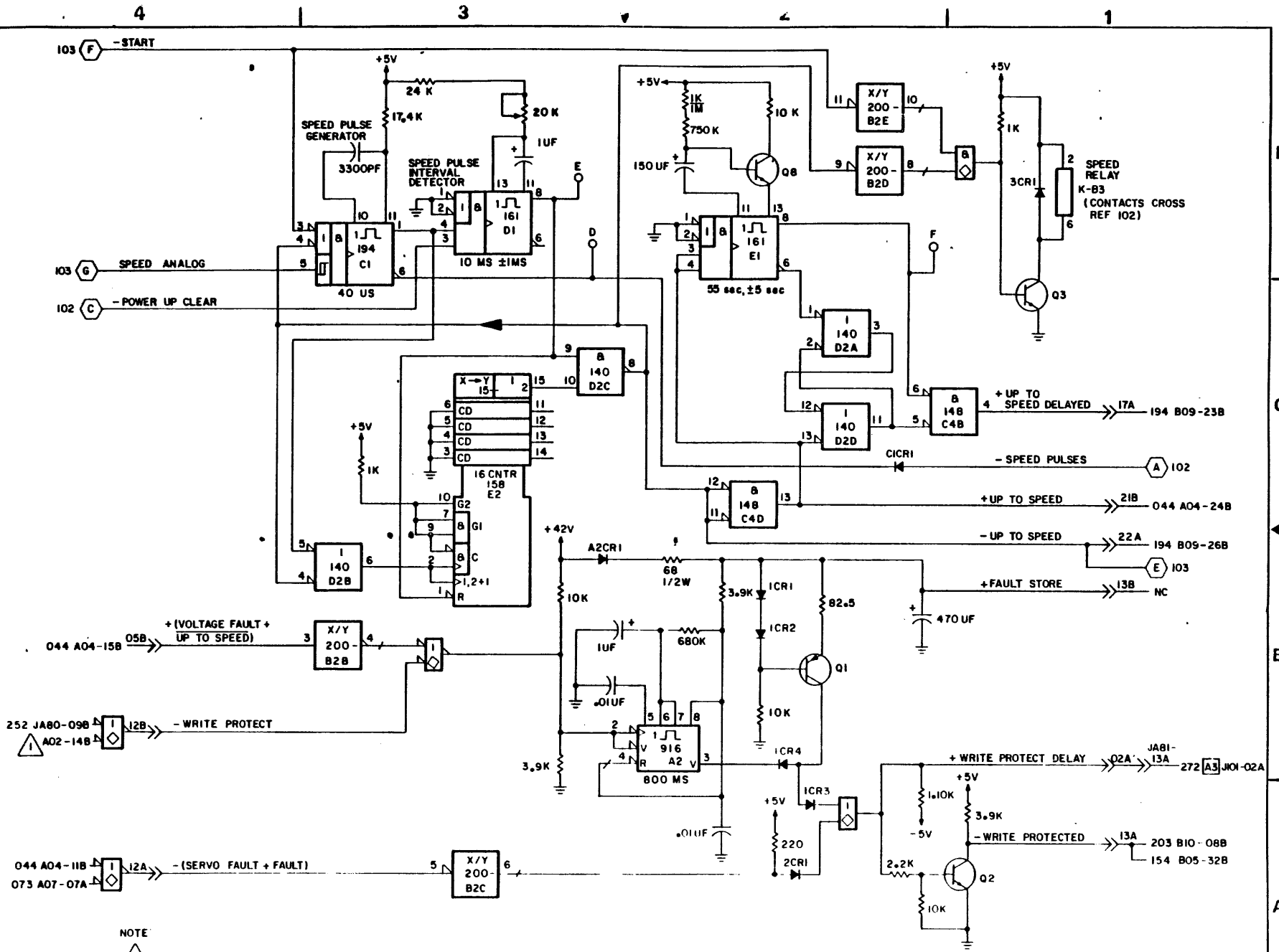

NOTE

1 A02 IS INTERNAL TEST JACK USED FOR CONNECTION TO FTU/HEAD ALIGNMENT CARD SEE CROSS REF NO 022 FOR DETAILS

CONTROL DATA CORPORATION NORMANDALE DIVISION	SPEED FAULT AND WRITE PROTECTED (60 PIN I/O)	LOC 2A10	CODE IDENT 19333	C	83322240	Z	B
			REV NO. 104		SHEET 4	1-52.18	

REVISION STATUS OF SHEETS

1	2	3	4	5	6	7	8	9	10	11	12	13	14	15	16	17	18	19	20
A	A	A	A																
B	B	B	B																
C	C	C	C																
D	D	D	D																
E	E	E	E																
F	F	E	E																
G	G	E	E																
H	H	E	E																
J	J	J	J																
K	K	K	K																
L	K	L	K																
M	K	M	K																
N	N	M	K																

ELEMENT TYPE	LOCATION	OUTPUT PIN(S)
200	D3D	8

REVISIONS

REV.	ECO	DESCRIPTION	DRFT	DATE	CHK'D
A	PE23000	RELEASED			
B	PE48296	CORRECT DIAGRAMS			
C	PE48402	CORR DIAG			
D	PE48652	IMPROVE CARD			✓
E	PE48523	CORR DIA.			
F	PE48652	IMPROVE CARD			
G	PE48675	IMPROVE CARD YIELD			
H	PE48932B	ADD ISOLATION DIODE TO +20 POWER			
J	PE55377	IMPROVE YIELD			
K	PE55370	ERROR CORR	MF	11-4-80	
L	PE55922	CHG COMP DESIG	MF	11-4-80	
M	PE55928	CHG RES VALUES	MF	11-4-80	
N	PE60016	ERROR CORR	MF	11-4-80	

LOCAL / REMOTE SWITCH ON CARD EDGE

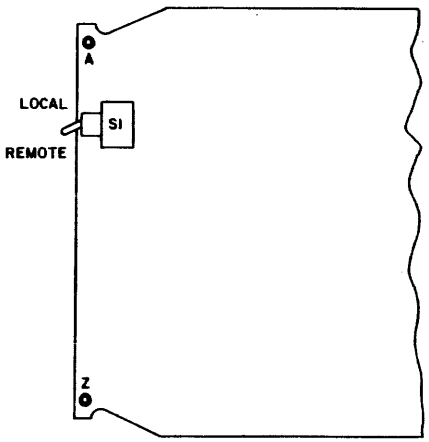

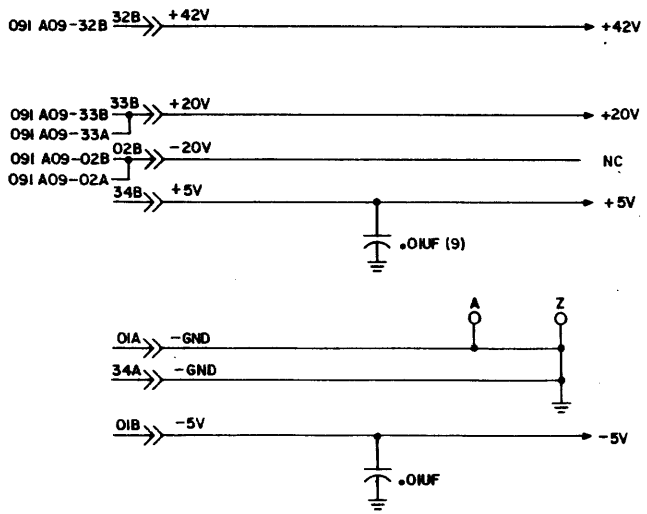

NOTE

THIS SET USED FOR 6SGV REV U & BLW. APPLICABLE TO 50 PIN I/O.

DRAWN	M Anderson 9-22-76	CONTROL DATA	INTERLOCKS AND SPEED DETECTOR DIAGRAMS	CODE IDENT 19333	C	83322240	U N
CHECKED							
ENGINEER		NORMANDALE DIVISION	TYPE 6SGV LOC A2A10	CROSS REF NO 101	SHEET 1 OF 4	PAGE 1-53	
APPROVED							

REF 83214835

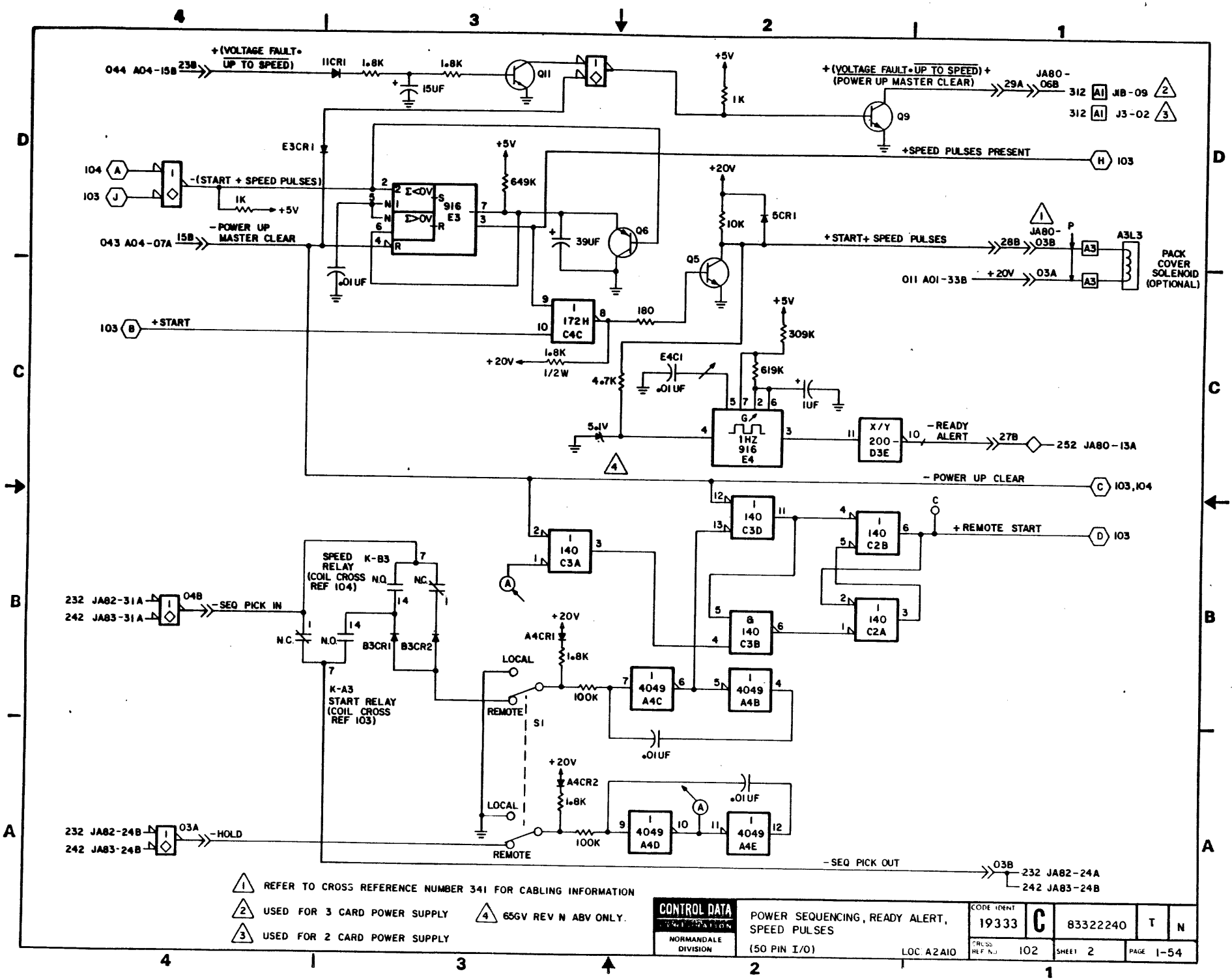
044 A04-15B
23B
+(VOLTAGE FAULT• UP TO SPEED)
11CR1
1.8K
1.8K
15UF
Q11
+5V
1K
+(VOLTAGE FAULT• UP TO SPEED)+ (POWER UP MASTER CLEAR)
Q9
29A
JA80-06B
312 A1 J1B-09
312 A1 J3-02
+SPEED PULSES PRESENT
H 103
E3CR1
104 A
103 J
-(START + SPEED PULSES)
1K
+5V
649K
916 E3
-POWER UP MASTER CLEAR
043 A04-07A
15B
.01UF
39UF
Q6
+20V
10K
5CR1
+START+ SPEED PULSES
28B
JA80-03B
P
A3L3
PACK COVER SOLENOID (OPTIONAL)
011 A01-33B
+20V
03A
Q5
103 B +START
172H C4C
180
309K
1.8K 1/2W
E4C1
.01UF
4.7K
619K
1UF
5.1V
1HZ 916 E4
X/Y 200 D3E
-READY ALERT
27B
252 JA80-13A
-POWER UP CLEAR
C 103,104
140 C3D
140 C2B
+REMOTE START
D 103
140 C3A
140 C2A
8 140 C3B
SPEED K-B3 RELAY (COIL CROSS REF 104)
232 JA82-31A
242 JA83-31A
04B
-SEQ PICK IN
N.C.
N.O.
B3CR1
B3CR2
A4CR1
1.8K
LOCAL
REMOTE
S1
100K
4049 A4C
4049 A4B
.01UF
K-A3 START RELAY (COIL CROSS REF 103)
A4CR2
4049 A4D
4049 A4E
232 JA82-24B
242 JA83-24B
03A
-HOLD
-SEQ PICK OUT
03B
232 JA82-24A
242 JA83-24B
1 REFER TO CROSS REFERENCE NUMBER 341 FOR CABLING INFORMATION
2 USED FOR 3 CARD POWER SUPPLY
3 USED FOR 2 CARD POWER SUPPLY
4 65GV REV N ABV ONLY.
CONTROL DATA CORPORATION
NORMANDALE DIVISION
POWER SEQUENCING, READY ALERT, SPEED PULSES
(50 PIN I/O)
LOC A2A10
CODE IDENT 19333
C
83322240
T
N
CROSS REF NO. 102
SHEET 2
PAGE 1-54

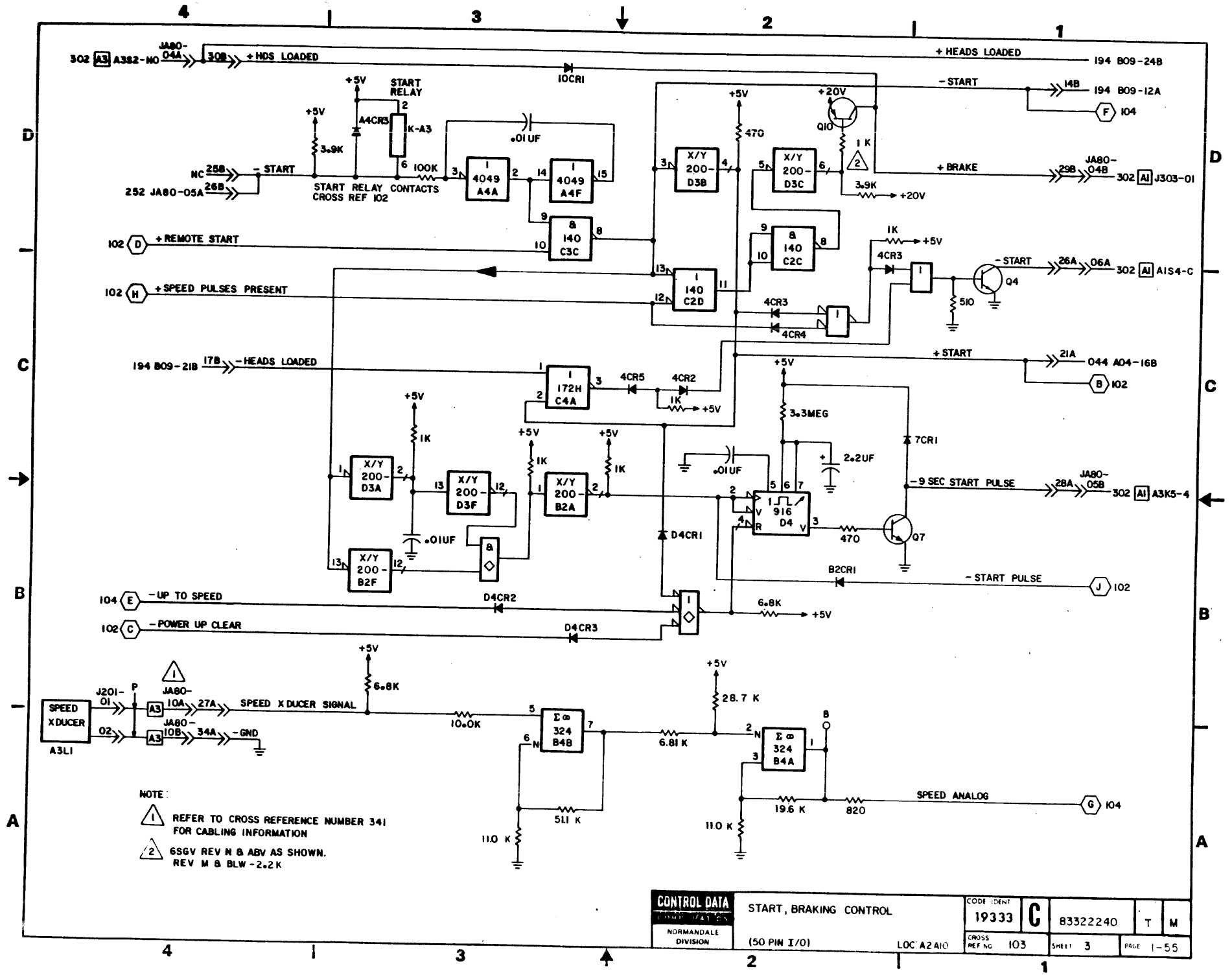
302 A3 A382-N0
JA80-04A
308
+ HDS LOADED
10CR1
+ HEADS LOADED
194 B09-24B
- START
14B
194 B09-12A
F 104
START RELAY
A4CR3
K-A3
.01UF
3.9K
NC 25B
252 JA80-05A 26B
- START
START RELAY CONTACTS CROSS REF 102
100K
I 4049 A4A
I 4049 A4F
Q10
1 K
2
+ BRAKE
29B
JA80-04B
302 A1 J303-01
3.9K
+20V
X/Y 200-D3B
X/Y 200-D3C
470
102 D + REMOTE START
102 H + SPEED PULSES PRESENT
8 140 C3C
8 140 C2C
I 140 C2D
4CR3
4CR4
1K
+5V
Q4
- START
26A
06A
302 A1 A1S4-C
510
194 B09-21B
17B
- HEADS LOADED
I 172H C4A
4CR5
4CR2
+ START
21A
044 A04-16B
B 102
3.3MEG
7CR1
2.2UF
X/Y 200-D3A
X/Y 200-D3F
X/Y 200-B2A
X/Y 200-B2F
8
916 D4
- 9 SEC START PULSE
28A
JA80-05B
302 A1 A3K5-4
470
Q7
D4CR1
B2CR1
- START PULSE
J 102
104 E - UP TO SPEED
102 C - POWER UP CLEAR
D4CR2
D4CR3
6.8K
SPEED XDUCER
A3L1
J201-01
02
P
1
JA80-10A
JA80-10B
27A
34A
SPEED XDUCER SIGNAL
- GND
10.0K
Σ ∞ 324 B4B
Σ ∞ 324 B4A
28.7 K
6.81 K
5.11 K
11.0 K
19.6 K
820
SPEED ANALOG
G 104
NOTE:
1 REFER TO CROSS REFERENCE NUMBER 341 FOR CABLING INFORMATION
2 6SGV REV N & ABV AS SHOWN. REV M & BLW - 2.2K
CONTROL DATA
NORMANDALE DIVISION
START, BRAKING CONTROL
(50 PIN I/O)
LOC A2A10
CODE IDENT 19333
C
83322240
T
M
CROSS REF NO 103
SHEET 3
PAGE 1-55

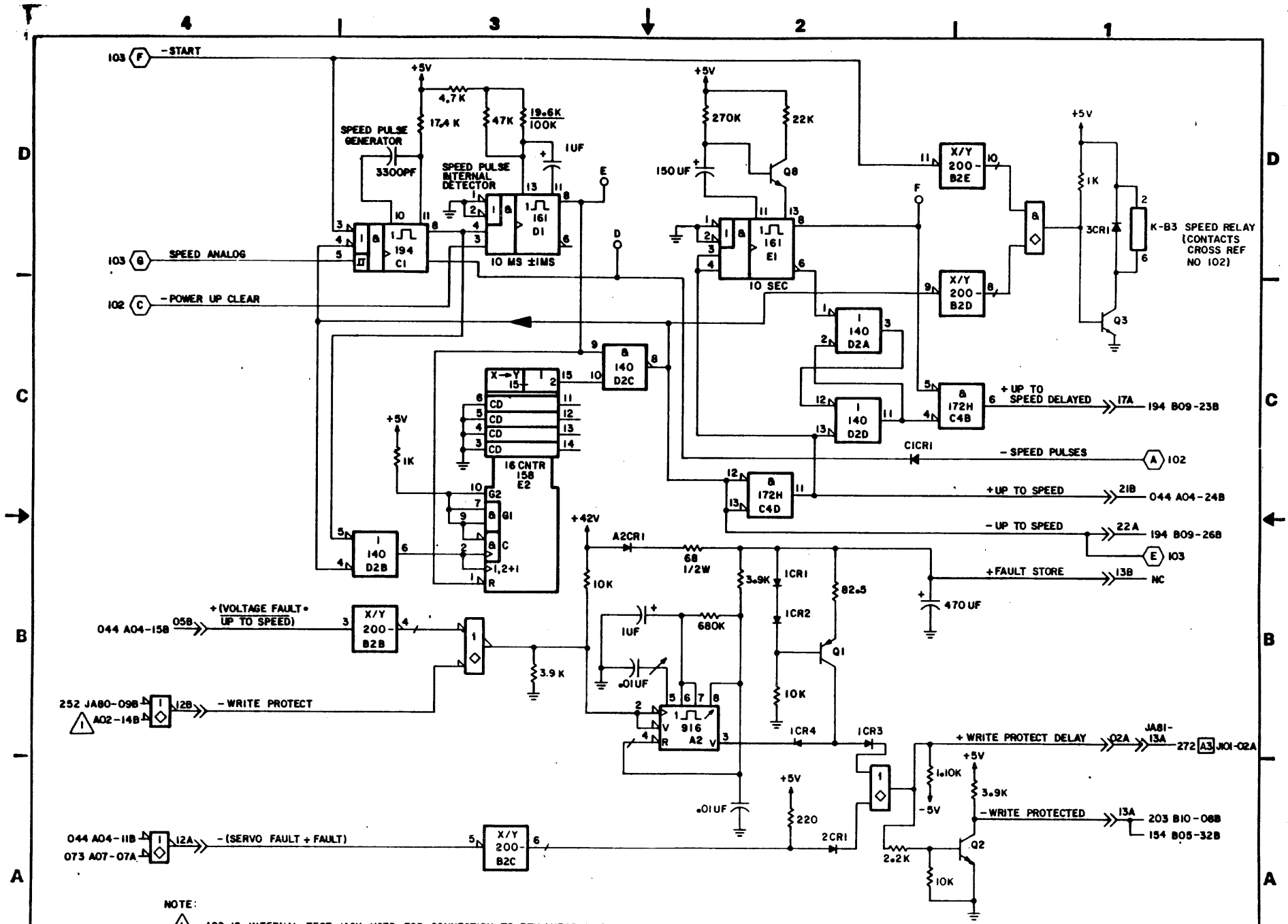

NOTE:

1. A02 IS INTERNAL TEST JACK USED FOR CONNECTION TO FTU/HEAD ALIGNMENT CARD. SEE CROSS REF. NO 022 FOR DETAILS
2. 6SGV REV N & ABV AS SHOWN. SEE PAGE 1-56.1/56.2 OF THIS DIAGRAM FOR M & BLW

CONTROL DATA NORMANDALE DIVISION	SPEED FAULT AND WRITE PROTECTED (50 PIN I/O) LOC. A2A10	CODE IDENT 19333	C	83322240	T	K
		CROSS REF NO 104		SHEET 4	PAGE 1-56	

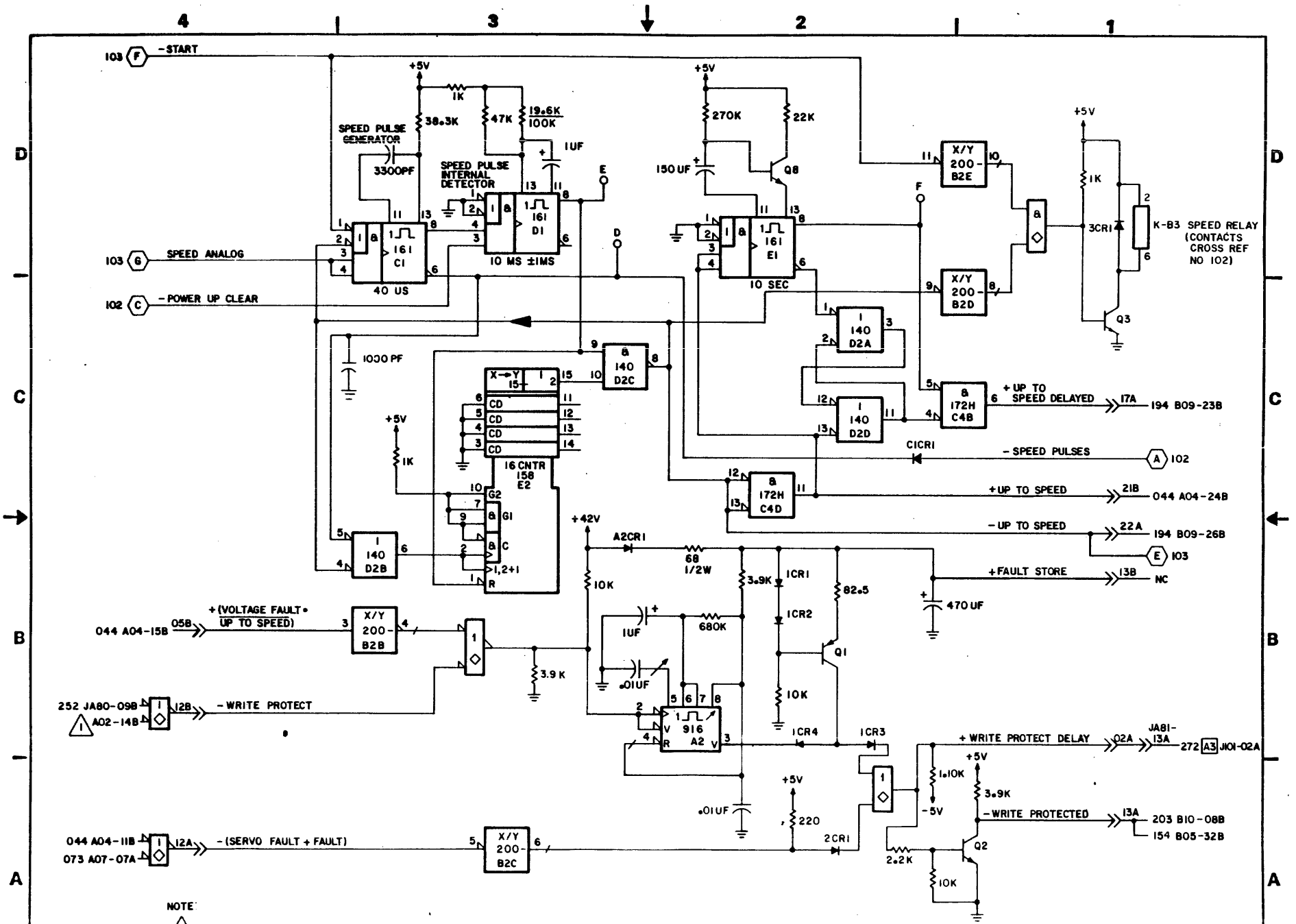

NOTE:

1. A02 IS INTERNAL TEST JACK USED FOR CONNECTION TO FTU/HEAD ALIGNMENT CARD. SEE CROSS REF. NO 022 FOR DETAILS
2. 6SGV REV N & BLWAS SHOWN. SEE PAGE 1-56 OF THIS DIAGRAM FOR N & ABV

CONTROL DATA NORMANDALE DIVISION	SPEED FAULT AND WRITE PROTECTED (50 PIN I/O) LOC A2A10	CODE IDENT 19333	C	83322240	T	K
		CROSS REF NO 104		SHEET 4	PAGE 1-56.1/56.2	

REVISION STATUS OF SHEETS

1	2	3	4	5	6	7	8	9	10	11	12	13	14	15	16	17	18	19	20
A	A	A	A																
B	B	B	B																
C	C	C	C																
D	D	D	D																
E	E	E	E																
F	F	E	E																
G	G	E	E																
H	H	E	E																
J	J	J	J																
K	K	K	K																
L	K	L	K																
M	K	M	K																
N	N	M	K																
P	P	P	P																
R	R	P	P																

UNUSED LOGIC ELEMENT

ELEMENT TYPE	LOCATION	OUTPUT PIN(S)
200	D30	8

REVISIONS

REV	ECO.	DESCRIPTION	DRFT	DATE	CHK'D
A	PE23000	RELEASED	MLA	[illegible]	[illegible]
B	PE48296	ERR. CORR.	MA	11-19-76	[illegible]
C	PE48402	ERROR CORRECTIONS	VG	1-11-77	[illegible]
D	PE48445	PREVENT IMPROPER HEAD LOADING	GR	3 7 77	
E	PE48523	ERROR CORRECTION	SB	4-7-77	
F	PE48652	DELETE E4A3, CHANGE Q5 TO NN3569	DM	6 14 77	
G	PE48675	ERROR CORRECTION	DM	7-7 77	
H	PE48932	ADD ISOLATION DIODE TO +20V POWER	DM	11-29-77	
J	PE55377	REV. PC BOARD & COMPONENTS	A A O	8-14 78	
K	PE55370	ERROR CORRECTIONS	A A O	8 10 78	
L	PE55922	CHG COMP DESIG	TH	9 19 79	
M	PE55928	INCREAS. RES. VALUE	CB	10-11-79	
N	PE60016	LOGIC DIA UP DATE	TH	[illegible]	
P	PE60142	IMPROVE 6S6V & 8S6V	TH	5 12 80	
R	PE60445	CHG RES ON -5GV	MF	3 16 81	

LOCAL / REMOTE SWITCH
ON CARD EDGE

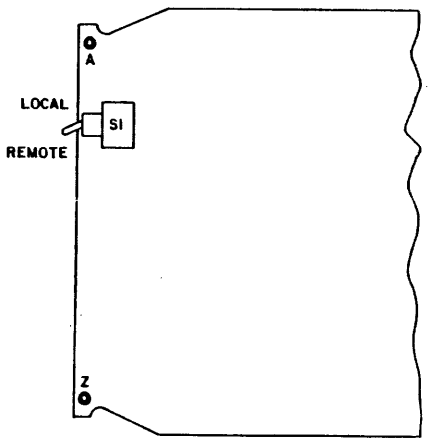

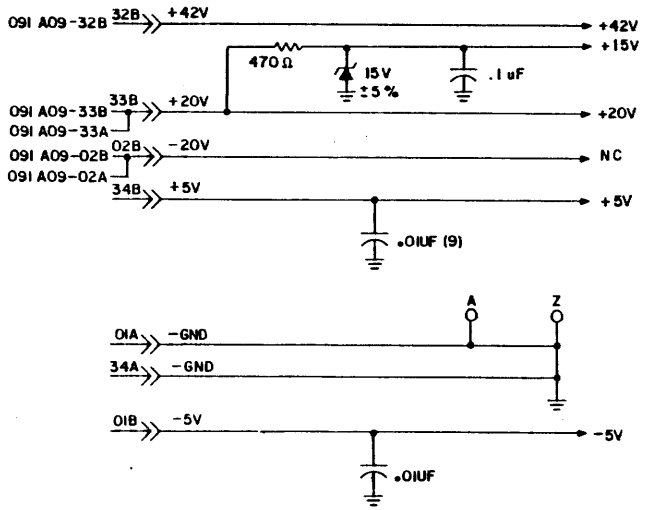

THIS SET USED FOR 6SGV, REV V & ABOVE (50 PIN I/O.)

DRAWN	M Cadieux 1-27-78	CONTROL DATA	INTERLOCKS AND SPEED DETECTOR DIAGRAMS	CODE IDENT 19333	C	83322240	Z R
CHECKED		NORMANDALE DIVISION	TYPE 6SGV LOC A2A10	CROSS REF NO 101	SHEET 1 OF 4	PAGE 1-56 3	
ENGINEER	[illegible]						
APPROVED							

REF 83214835

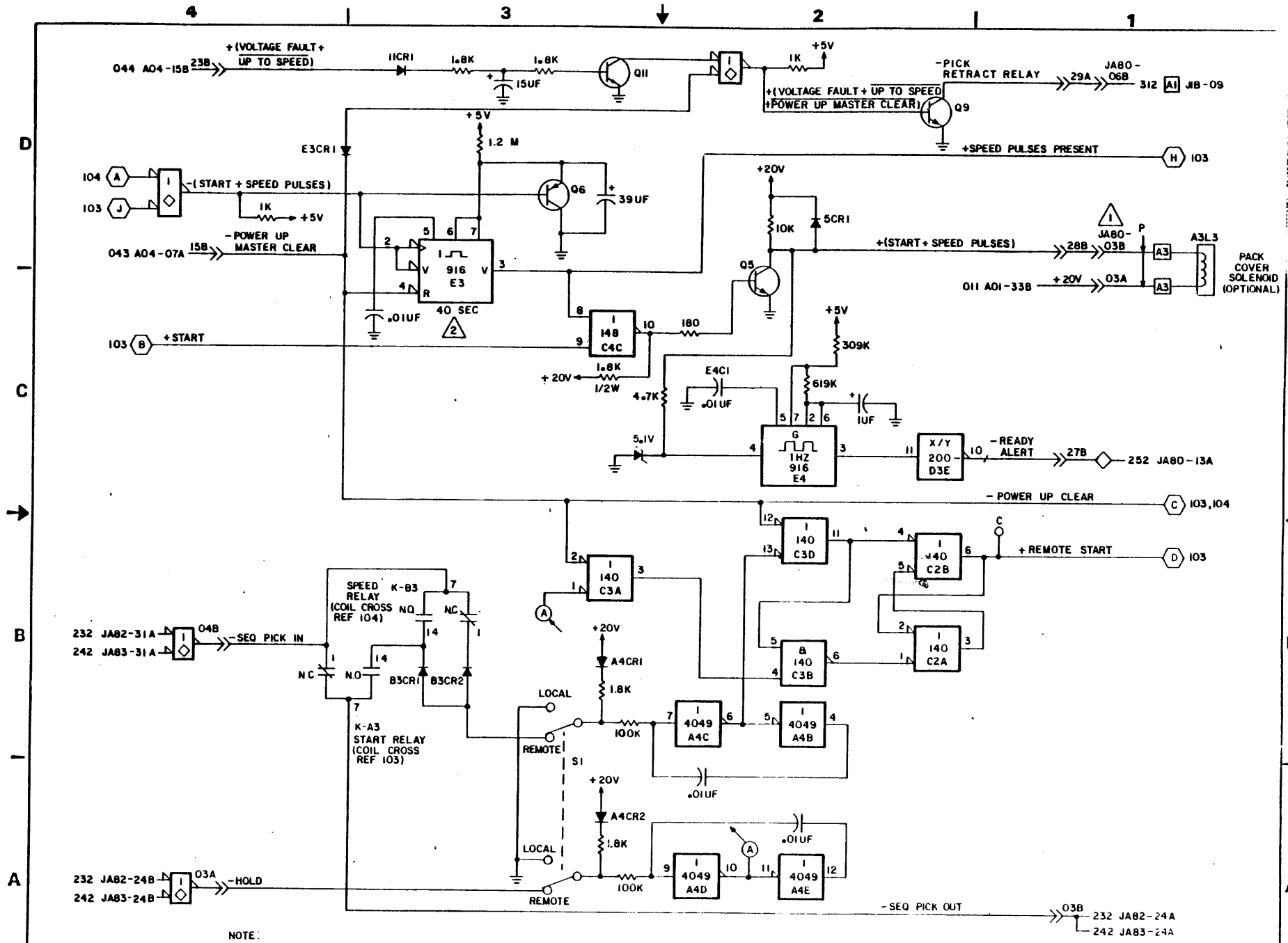

NOTE:

1. REFER TO CROSS REFERENCE NUMBER 341 FOR CABLING INFORMATION
2. 23 SEC FOR 6SGV REV Y & BLW.

CONTROL DATA — NORMANDALE DIVISION

POWER SEQUENCING, READY ALERT, SPEED PULSES

(50 PIN I/O) LOC A2A10

CODE IDENT				
19333	C	83322240	Z	R
REV. REF NO. 102	SHEET 2		1-564	

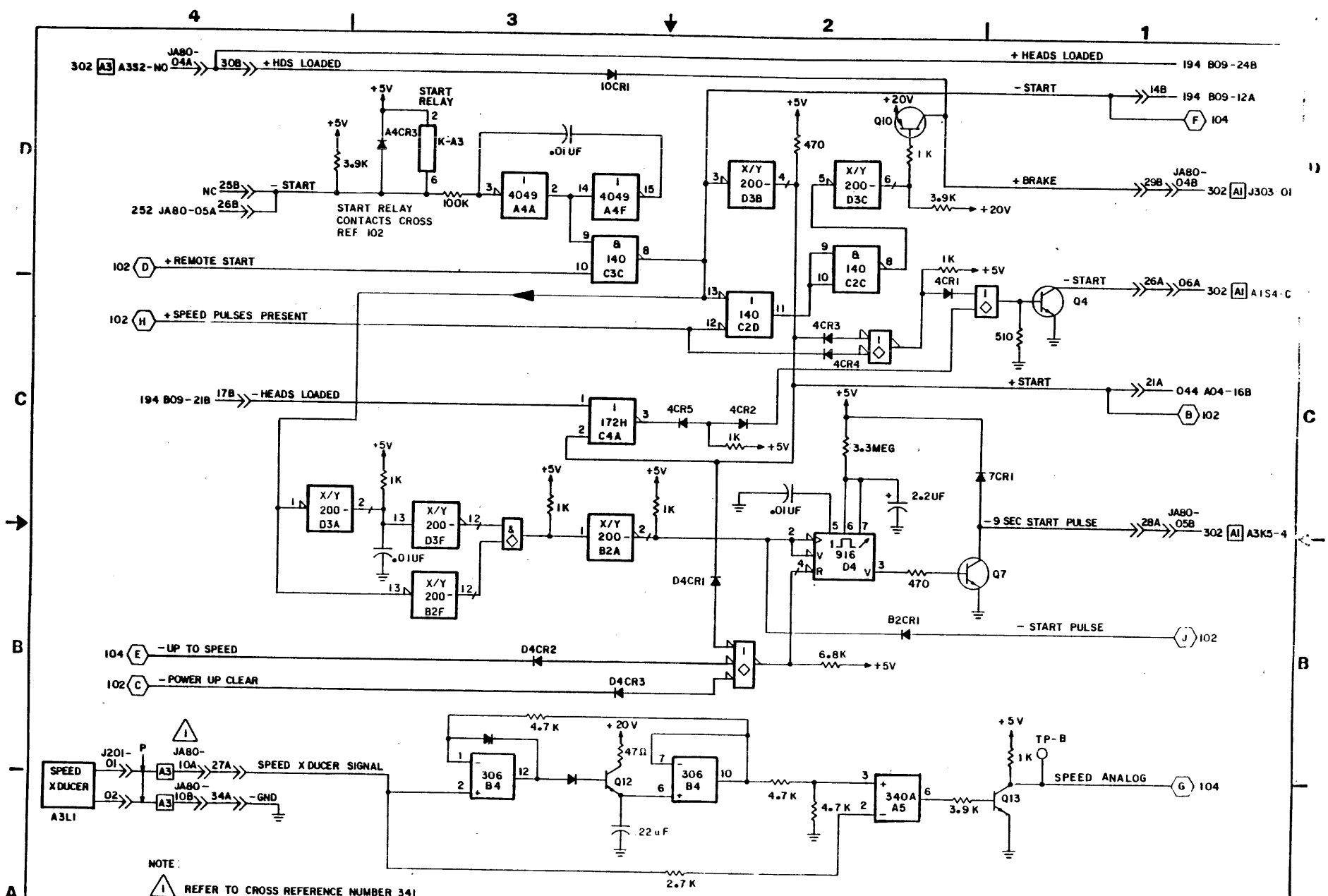
302 A3 A332-N0
JA80-04A
308
+ HDS LOADED
10CR1
+ HEADS LOADED
194 B09-24B
- START
148
194 B09-12A
F 104
+5V
START RELAY
A4CR3
1K-A3
.01 UF
3.9K
NC 25B
252 JA80-05A 26B
- START
START RELAY CONTACTS CROSS REF 102
100K
1/4049 A4A
1/4049 A4F
+5V
470
Q10
+20V
1 K
X/Y 200-D3B
X/Y 200-D3C
+ BRAKE
298
JA80-04B
302 A1 J303 01
3.9K
+20V
102 D + REMOTE START
8/140 C3C
8/140 C2C
1K
+5V
4CR1
- START
26A
06A
302 A1 A1S4-C
Q4
102 H + SPEED PULSES PRESENT
1/140 C2D
4CR3
4CR4
510
194 B09-21B
17B
- HEADS LOADED
1/172H C4A
4CR5
4CR2
1K
+5V
+ START
21A
044 A04-16B
B 102
+5V
3.3MEG
7CR1
X/Y 200-D3A
X/Y 200-D3F
X/Y 200-B2F
X/Y 200-B2A
.01UF
2.2UF
- 9 SEC START PULSE
28A
JA80-05B
302 A1 A3K5-4
1/916 D4
Q7
470
D4CR1
B2CR1
- START PULSE
J 102
104 E - UP TO SPEED
D4CR2
102 C - POWER UP CLEAR
D4CR3
6.8K
+5V
SPEED XDUCER
A3L1
J201-01
02
P
JA80-10A
JA80-10B
27A
34A
SPEED XDUCER SIGNAL
- GND
4.7 K
+20V
47Ω
306 B4
306 B4
Q12
22 uF
4.7K
4.7 K
340A A5
+5V
TP-B
1K
Q13
3.9 K
SPEED ANALOG
G 104
2.7 K
NOTE:
1 REFER TO CROSS REFERENCE NUMBER 341 FOR CABLING INFORMATION
CONTROL DATA CORPORATION
NORMANDALE DIVISION
START, BRAKING CONTROL
(50 PIN I/O)
LOC A2A10
CODE IDENT 19333
C
83322240
Z
P
UNISS REF NO. 103
SHEET 3
1-565

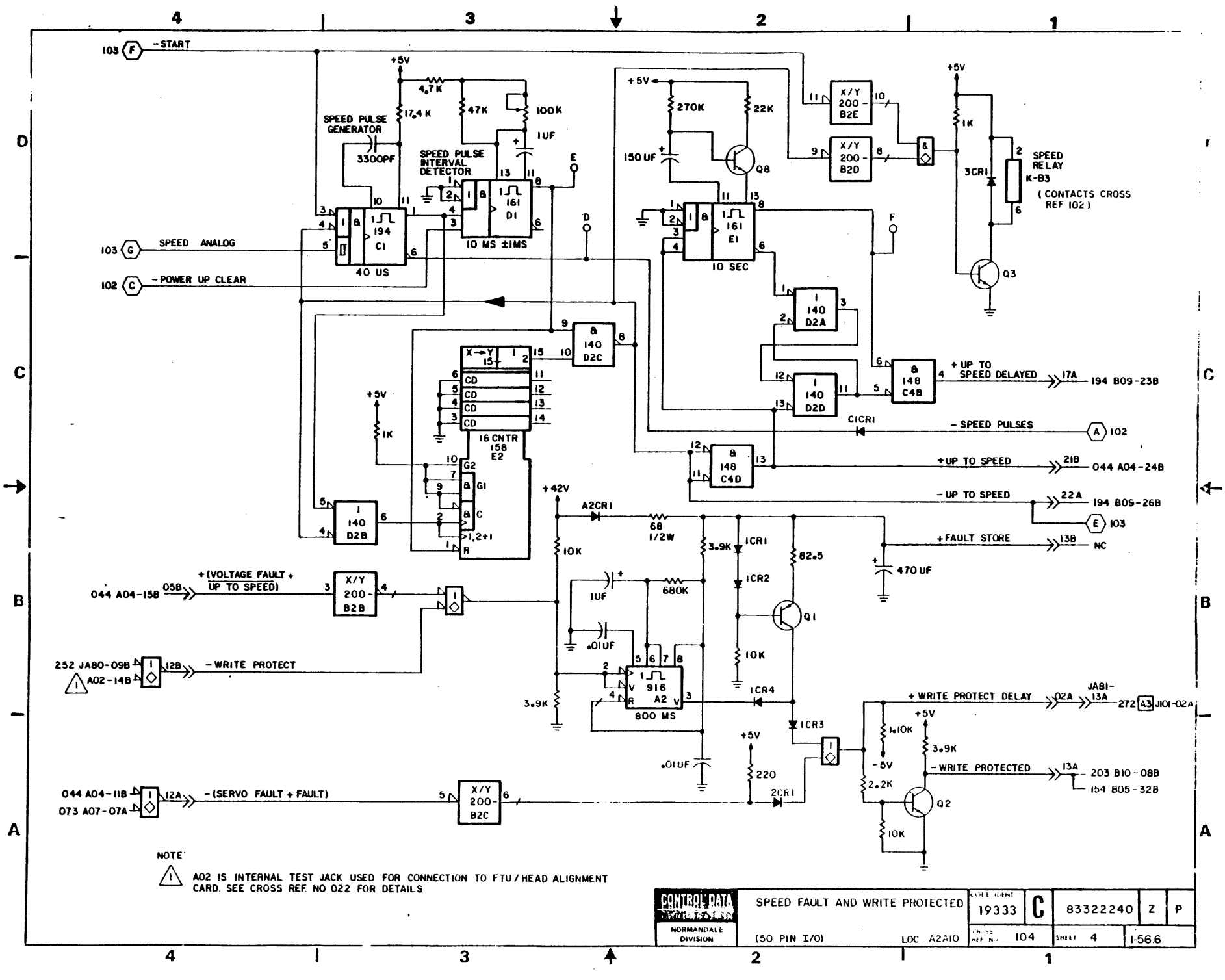
103 F -START
+5V
4.7K
17.4K
47K
100K
1UF
SPEED PULSE GENERATOR
3300PF
SPEED PULSE INTERVAL DETECTOR
161 D1
10 MS ±1MS
194 C1
40 US
103 G SPEED ANALOG
102 C -POWER UP CLEAR
270K
22K
150 UF
Q8
161 E1
10 SEC
X/Y 200-B2E
X/Y 200-B2D
1K
3CR1
SPEED RELAY K-B3
(CONTACTS CROSS REF 102)
Q3
140 D2A
140 D2D
148 C4B
+UP TO SPEED DELAYED
17A
194 B09-23B
CICR1
-SPEED PULSES
A 102
148 C4D
+UP TO SPEED
21B
044 A04-24B
-UP TO SPEED
22A
194 B05-26B
E 103
+FAULT STORE
13B
NC
470 UF
140 D2C
X→Y
16 CNTR 158 E2
140 D2B
+42V
A2CR1
68 1/2W
10K
3.9K
ICR1
ICR2
82.5
Q1
1UF
680K
.01UF
916 A2
800 MS
ICR4
ICR3
+(VOLTAGE FAULT + UP TO SPEED)
044 A04-15B 05B
X/Y 200-B2B
252 JA80-09B
A02-14B
12B
-WRITE PROTECT
+WRITE PROTECT DELAY
02A
JA81-13A
272 A3 J101-02A
1.10K
-5V
-WRITE PROTECTED
13A
203 B10-08B
154 B05-32B
2.2K
Q2
220
2CR1
044 A04-11B
073 A07-07A
12A
-(SERVO FAULT + FAULT)
X/Y 200-B2C
NOTE
A02 IS INTERNAL TEST JACK USED FOR CONNECTION TO FTU/HEAD ALIGNMENT CARD. SEE CROSS REF NO 022 FOR DETAILS
CONTROL DATA
NORMANDALE DIVISION
SPEED FAULT AND WRITE PROTECTED
(50 PIN I/O)
LOC A2A10
CODE IDENT 19333
C
83322240
Z
P
CROSS REF NO. 104
SHEET 4
1-56.6

REVISION STATUS OF SHEETS

1	2	3	4	5	6	7	8	9	10	11	12	13	14	15	16	17	18	19	20
A	A	A																	
B	B	B																	
C	C	B																	
D	C	D																	
E	E	D																	
F																			
G		G																	

REVISIONS

REV	ECO	DESCRIPTION	DRFT	DATE	CHK'D
A	PE23[illegible]	RELEASED			
B	PE48402	CORRECT DIAGRAMS	WEB	12-16-76	
C	PE48568	ERR CORR	DM	7-25-77	
D	PE57173	CHG IC FAMILIES	MF	11-5-80	
E	DJ00201	PLO CLOCK ERROR	MJ	5-12-82	GSD
F	DJ22000	XFR FRM PE	JG	7-25-84	
G	DJ00669	CHG FTVV IC/CAPS	JG	7-25-84	
	DJ72000A	FORMAT CHG			

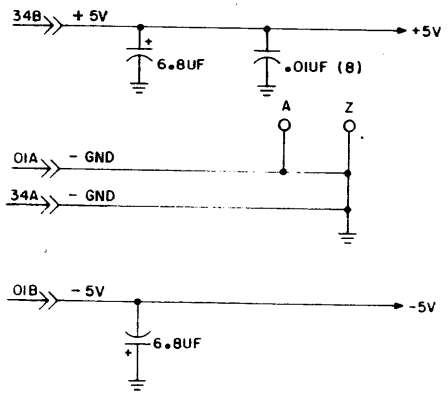

APPLICABLE TO 60 PIN I/O

THIS DOCUMENT TRANSFERRED TO TCD DIVISION
DATE: 7/27/84

DRAWN	G Rasine	8/19/76
CHECKED		
ENGINEER		
APPROVED		

CONTROL DATA
TWIN CITIES DISK DIVISION

CHANNEL I TRANSMITTERS AND RECEIVERS - HEAD ADDRESS REGISTER DIAGRAMS

TYPE FTVV LOC A2B01

CODE IDENT				
19333	C	83322240	Z	G

CROSS REF NO 111 | SHEET 1 OF 3 | PAGE 1-57

REF 83214811

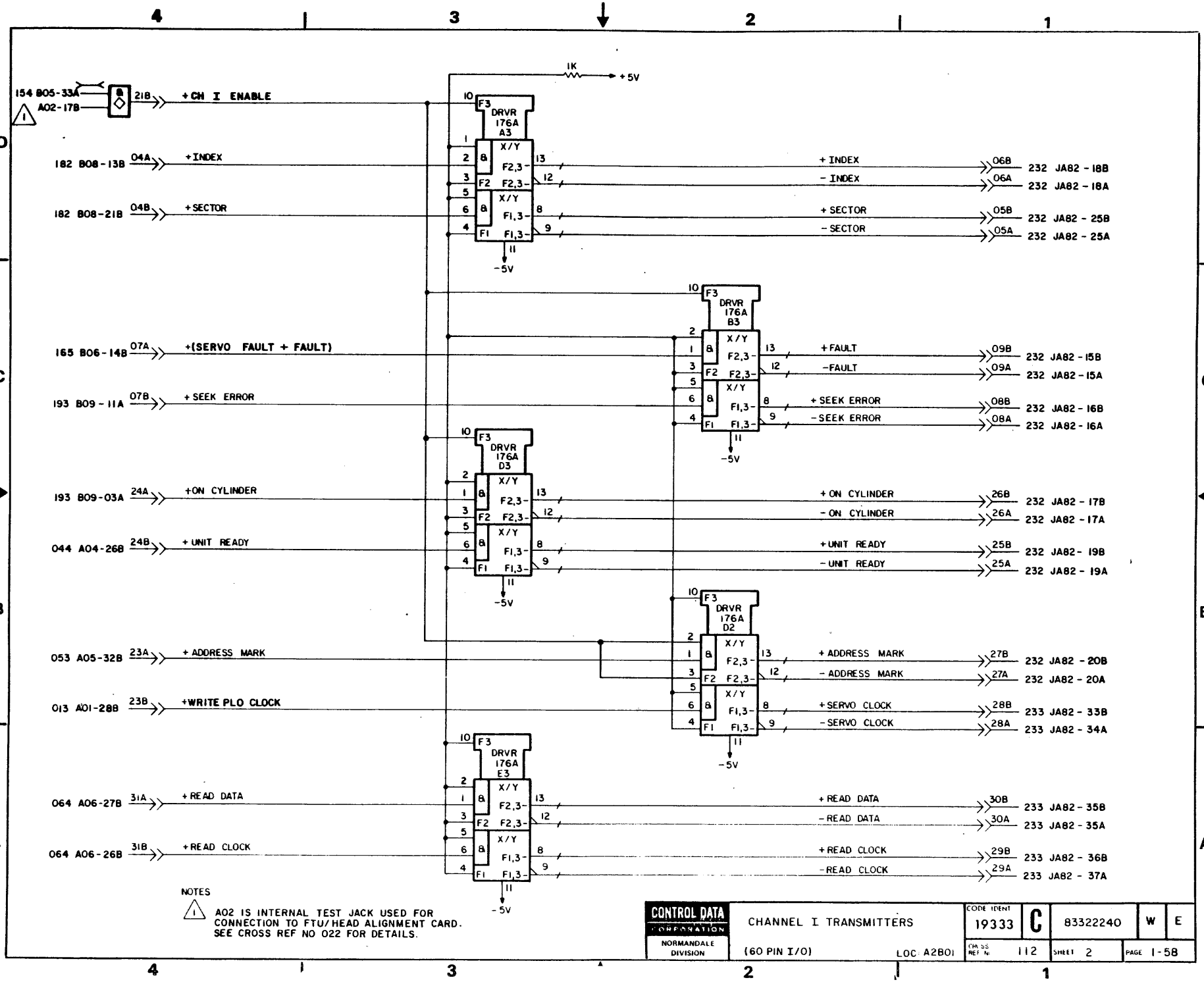

NOTES

1. A02 IS INTERNAL TEST JACK USED FOR CONNECTION TO FTU/HEAD ALIGNMENT CARD. SEE CROSS REF NO 022 FOR DETAILS.

CONTROL DATA CORPORATION NORMANDALE DIVISION	CHANNEL I TRANSMITTERS (60 PIN I/O) LOC A2B01	CODE IDENT 19333	C	83322240	W	E
		CROSS REF NO 112		SHEET 2	PAGE 1-58	

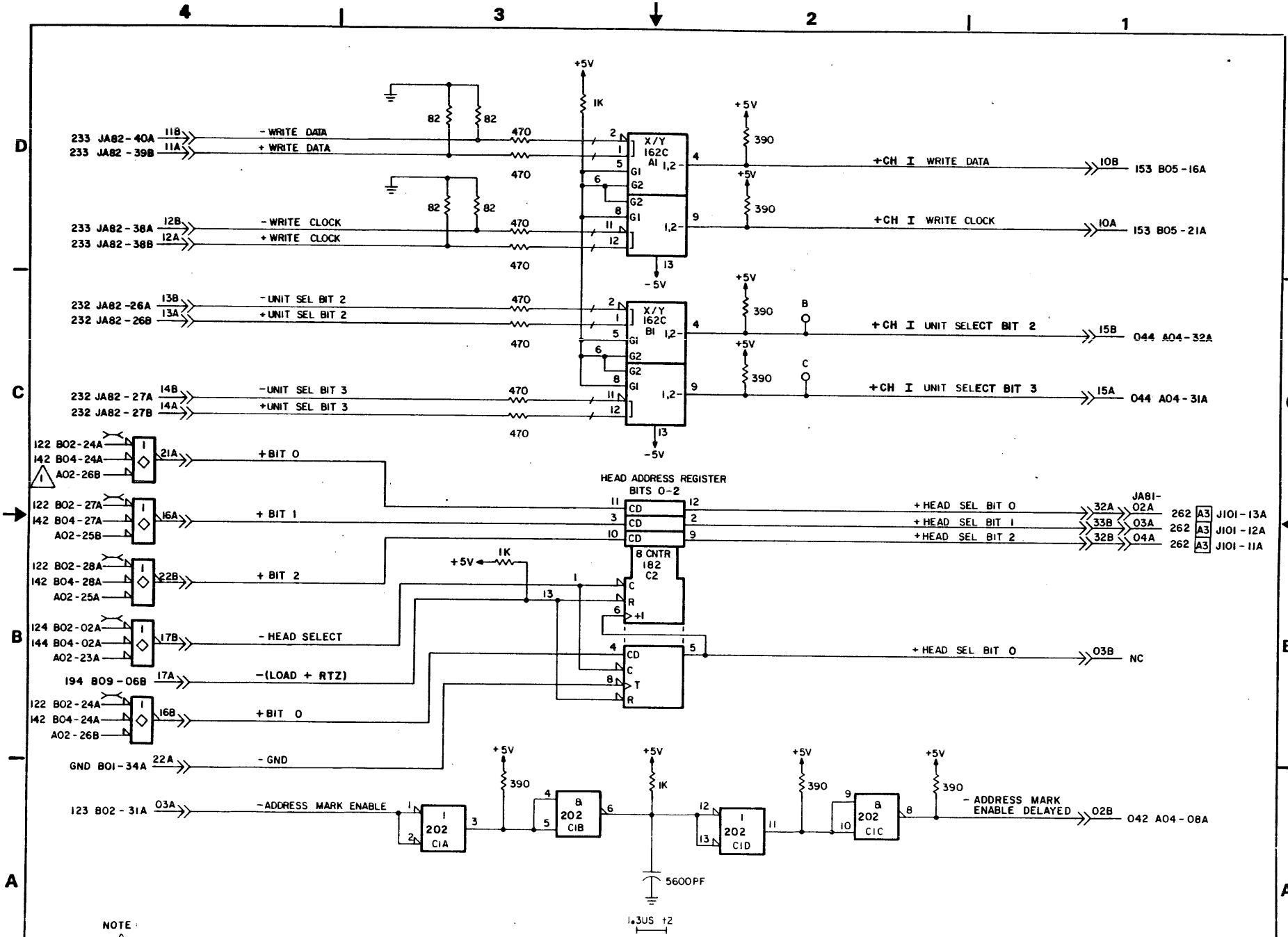

NOTE

⚠1 A02 IS INTERNAL TEST JACK USED FOR CONNECTION TO FTU / HEAD ALIGNMENT CARD SEE CROSS REF NO 022 FOR DETAILS

CONTROL DATA CORPORATION
NORMANDALE DIVISION

CHANNEL I RECEIVERS, HEAD ADDRESS REGISTER
(60 PIN I/O)

CODE IDENT				
19333	C	83322240	Z	G
DWG REV	113	SHEET 3	PAGE 1-59/60	

REVISION STATUS OF SHEETS

1	2	3	4	5	6	7	8	9	10	11	12	13	14	15	16	17	18	19	20
A	A	A																	
B	B	B																	
C	C	B																	
D	D	B																	

REVISIONS

REV	ECO	DESCRIPTION	DRFT	DATE	CHK'D
A	PE23[illegible]	RELEASE			
B	PE48402	CORRECT DIAGRAMS	GR	12 16 76	
C	PE48568	CORR ERR	DM	7-25-77	
D	DJ00201	PIO CLOCK ERROR	MJ	5 13 82	

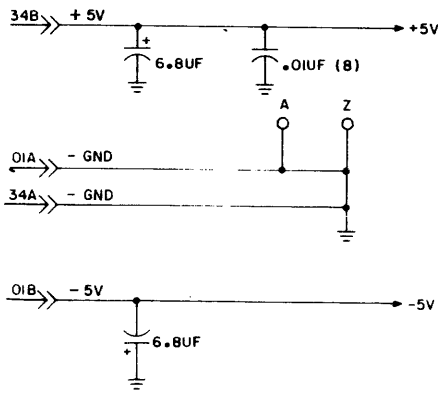

APPLICABLE TO 50 PIN I/O

DRAWN		CONTROL DATA CORPORATION	CHANNEL I TRANSMITTERS AND RECEIVERS - HEAD ADDRESS REGISTER DIAGRAMS	CODE IDENT 19333	C	83322240	W D
CHECKED							
ENGINEER		NORMANDALE DIVISION	TYPE FTVV LOC A2B01	CROSS REF NO 111		SHEET 1 OF 3	PAGE 1-61
APPROVED							

REF 83214836

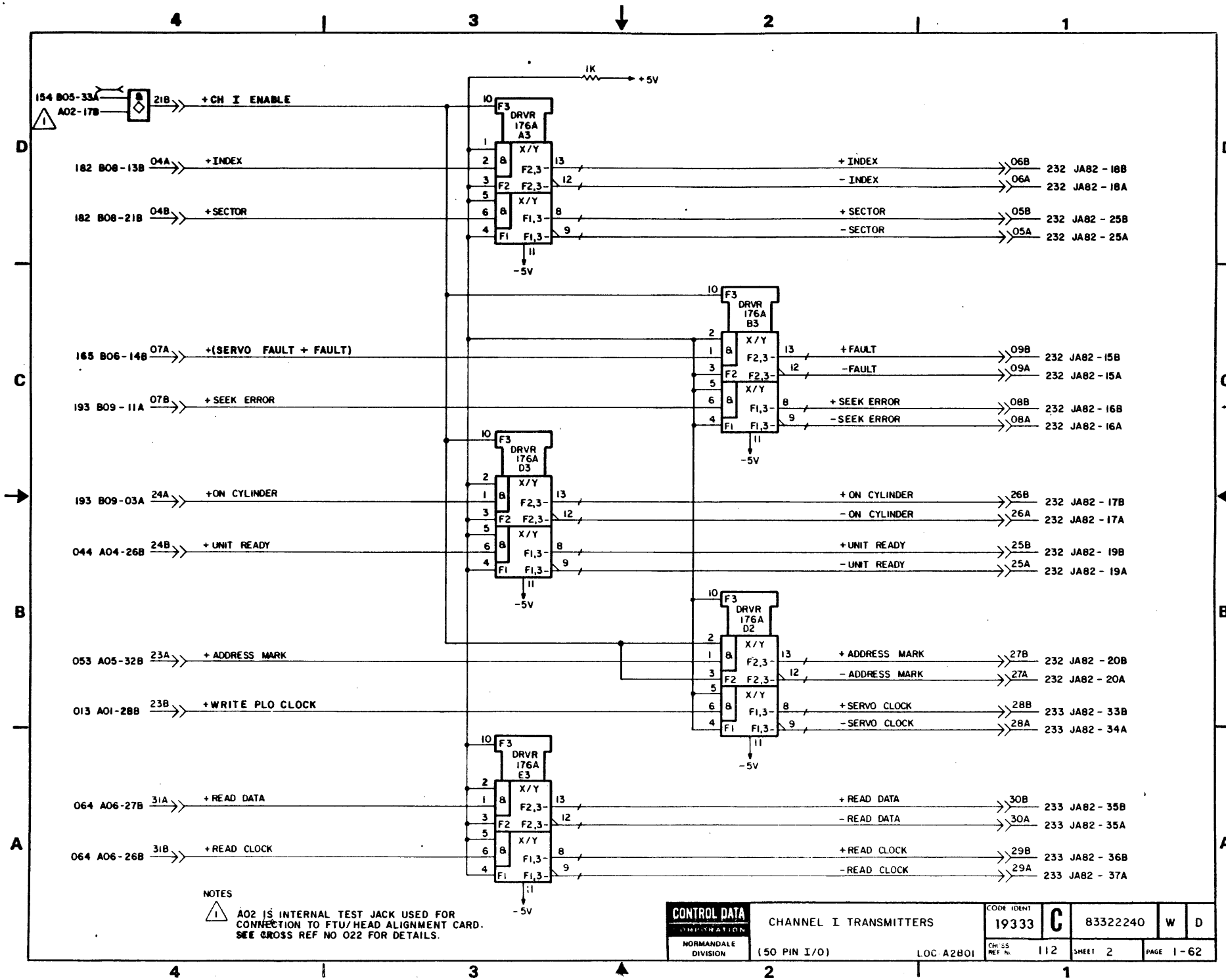
154 B05-33A
A02-17B
21B
+CH I ENABLE
1K
+5V
DRVR 176A A3
182 B08-13B
04A
+INDEX
182 B08-21B
04B
+SECTOR
+INDEX
-INDEX
+SECTOR
-SECTOR
06B
06A
05B
05A
232 JA82 - 18B
232 JA82 - 18A
232 JA82 - 25B
232 JA82 - 25A
DRVR 176A B3
165 B06-14B
07A
+(SERVO FAULT + FAULT)
193 B09-11A
07B
+SEEK ERROR
+FAULT
-FAULT
+SEEK ERROR
-SEEK ERROR
09B
09A
08B
08A
232 JA82 - 15B
232 JA82 - 15A
232 JA82 - 16B
232 JA82 - 16A
DRVR 176A D3
193 B09-03A
24A
+ON CYLINDER
044 A04-26B
24B
+UNIT READY
+ON CYLINDER
-ON CYLINDER
+UNIT READY
-UNIT READY
26B
26A
25B
25A
232 JA82 - 17B
232 JA82 - 17A
232 JA82 - 19B
232 JA82 - 19A
DRVR 176A D2
053 A05-32B
23A
+ADDRESS MARK
013 A01-28B
23B
+WRITE PLO CLOCK
+ADDRESS MARK
-ADDRESS MARK
+SERVO CLOCK
-SERVO CLOCK
27B
27A
28B
28A
232 JA82 - 20B
232 JA82 - 20A
233 JA82 - 33B
233 JA82 - 34A
DRVR 176A E3
064 A06-27B
31A
+READ DATA
064 A06-26B
31B
+READ CLOCK
+READ DATA
-READ DATA
+READ CLOCK
-READ CLOCK
30B
30A
29B
29A
233 JA82 - 35B
233 JA82 - 35A
233 JA82 - 36B
233 JA82 - 37A
-5V
NOTES
1 A02 IS INTERNAL TEST JACK USED FOR CONNECTION TO FTU/HEAD ALIGNMENT CARD. SEE CROSS REF NO 022 FOR DETAILS.
CONTROL DATA CORPORATION
NORMANDALE DIVISION
CHANNEL I TRANSMITTERS
(50 PIN I/O)
LOC A2B01
CODE IDENT 19333
C
83322240
W
D
CROSS REF NO 112
SHEET 2
PAGE 1-62

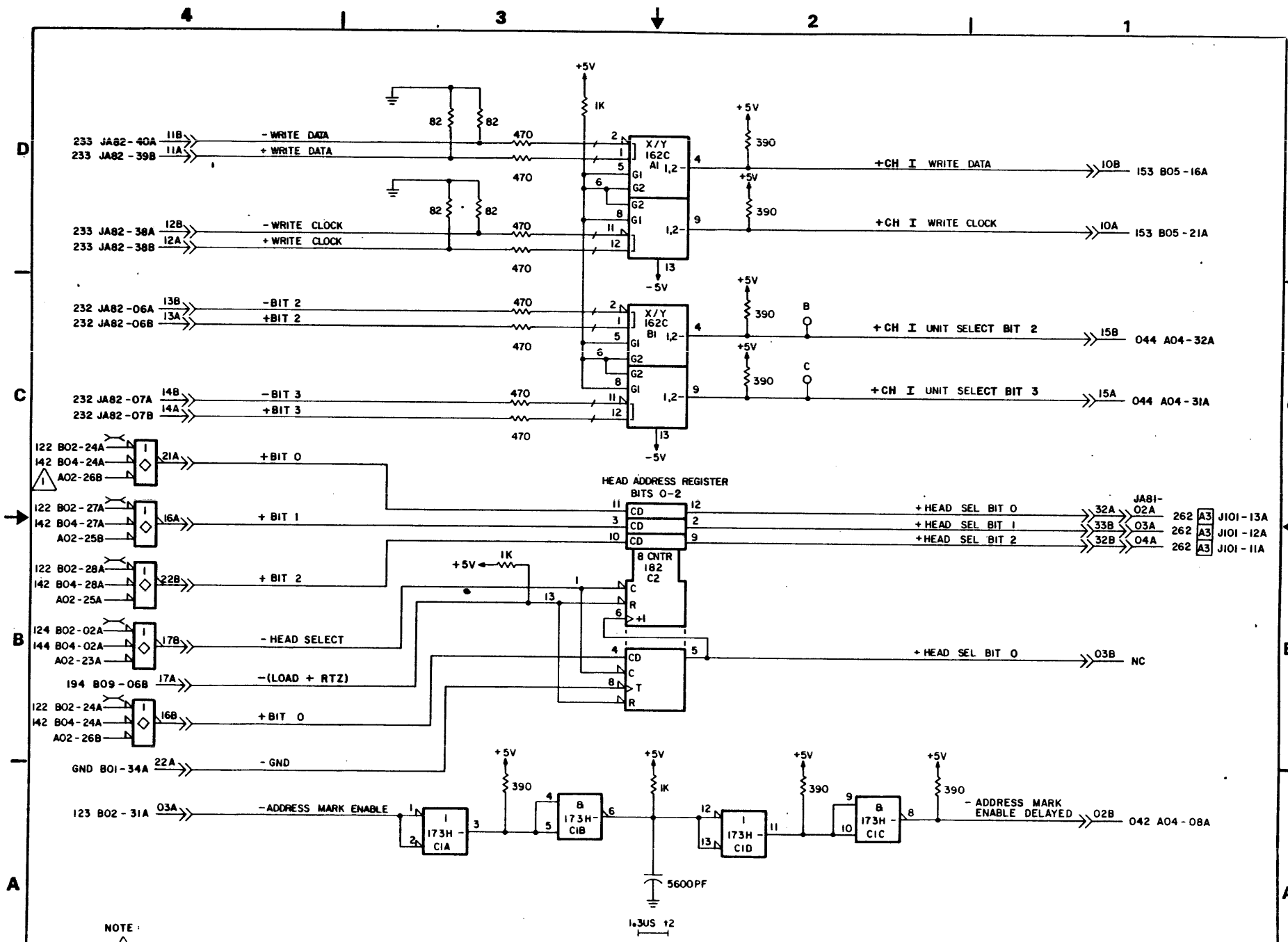
233 JA82-40A 11B - WRITE DATA
233 JA82-39B 11A + WRITE DATA
233 JA82-38A 12B - WRITE CLOCK
233 JA82-38B 12A + WRITE CLOCK
232 JA82-06A 13B -BIT 2
232 JA82-06B 13A +BIT 2
232 JA82-07A 14B -BIT 3
232 JA82-07B 14A +BIT 3
82
470
1K
+5V
-5V
390
X/Y 162C A1
X/Y 162C B1
+CH I WRITE DATA 10B 153 B05-16A
+CH I WRITE CLOCK 10A 153 B05-21A
+CH I UNIT SELECT BIT 2 15B 044 A04-32A
+CH I UNIT SELECT BIT 3 15A 044 A04-31A
122 B02-24A
142 B04-24A
A02-26B 21A +BIT 0
122 B02-27A
142 B04-27A
A02-25B 16A + BIT 1
122 B02-28A
142 B04-28A
A02-25A 22B + BIT 2
124 B02-02A
144 B04-02A
A02-23A 17B - HEAD SELECT
194 B09-06B 17A -(LOAD + RTZ)
122 B02-24A
142 B04-24A
A02-26B 16B + BIT 0
GND B01-34A 22A - GND
HEAD ADDRESS REGISTER BITS 0-2
CD
8 CNTR 182 C2
+HEAD SEL BIT 0 32A JA81-02A 262 A3 J101-13A
+HEAD SEL BIT 1 33B 03A 262 A3 J101-12A
+HEAD SEL BIT 2 32B 04A 262 A3 J101-11A
+HEAD SEL BIT 0 03B NC
123 B02-31A 03A -ADDRESS MARK ENABLE
173H-C1A
173H-C1B
173H-C1C
173H-C1D
- ADDRESS MARK ENABLE DELAYED 02B 042 A04-08A
5600PF
1.3US ±2
NOTE 1
A02 IS INTERNAL TEST JACK USED FOR CONNECTION TO FTU / HEAD ALIGNMENT CARD. SEE CROSS REF. NO. 022 FOR DETAILS.
CONTROL DATA
NORMANDALE DIVISION
CHANNEL I RECEIVERS, HEAD ADDRESS REGISTER
(50 PIN I/O)
LOC A2B01
CODE IDENT 19333
C
DWG NO 83322240
A
B
CROSS REF NO 113
SHEET 3
PAGE 1-63/64

REVISION STATUS OF SHEETS

1	2	3	4	5	6	7	8	9	10	11	12	13	14	15	16	17	18	19	20
A	A	A																	
B	B	B																	
C	C	B																	
D	D	B																	

REVISIONS

REV	ECO	DESCRIPTION	DRFT	DATE	CHK'D
A	PE23447	RELEASED			
B	PE48402	CORRECT DIAGRAMS	WEB	12-17-76	
C	PE48568	CORR ERR	DM	7-25-77	
D	DJ00201	PLO CLOCK ERROR	MJ	5-13-82	

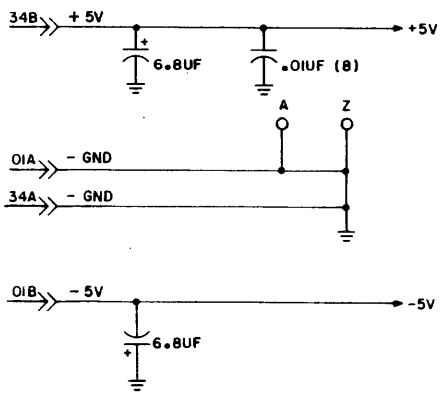

APPLICABLE TO INDEX AND SECTOR IN B CABLE

DRAWN	G Rasine	8/19/76	CONTROL DATA NORMANDALE DIVISION	CHANNEL I TRANSMITTERS AND RECEIVERS - HEAD ADDRESS REGISTER DIAGRAMS	CODE IDENT 19333	C	83322240	W D
CHECKED								
ENGINEER								
APPROVED				TYPE GTVV LOC A2B01	CROSS REF NO 111		SHEET 1 OF 3	PAGE 1-65

REF 83214846

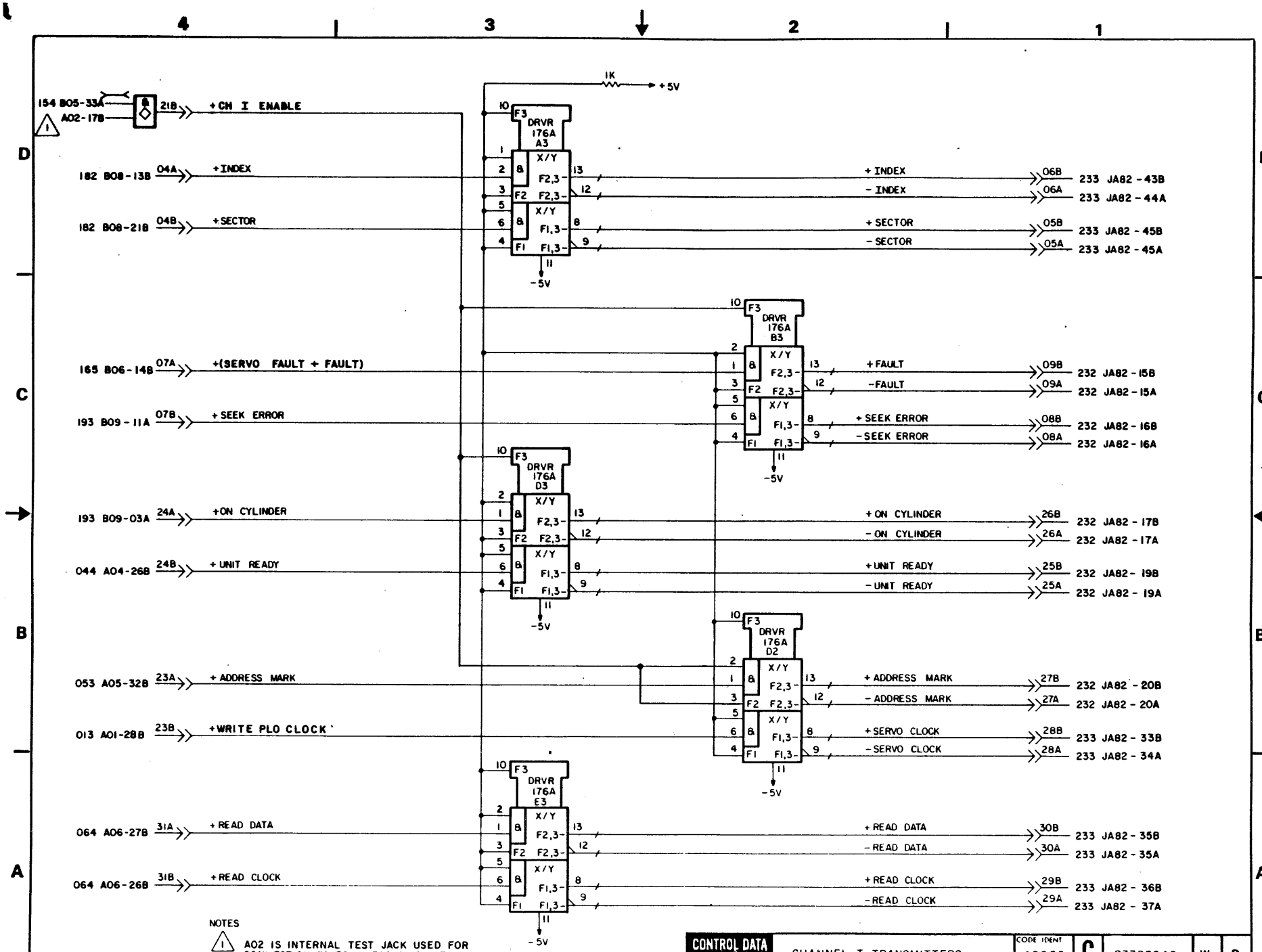

NOTES

1. A02 IS INTERNAL TEST JACK USED FOR CONNECTION TO FTU/HEAD ALIGNMENT CARD. SEE CROSS REF NO 022 FOR DETAILS.

CONTROL DATA CORPORATION NORMANDALE DIVISION	CHANNEL I TRANSMITTERS (S&IOBC) LOC A2B01	CODE IDENT 19333	C	83322240	W D
		CROSS REF NO 112		SHEET 2	PAGE 1-66

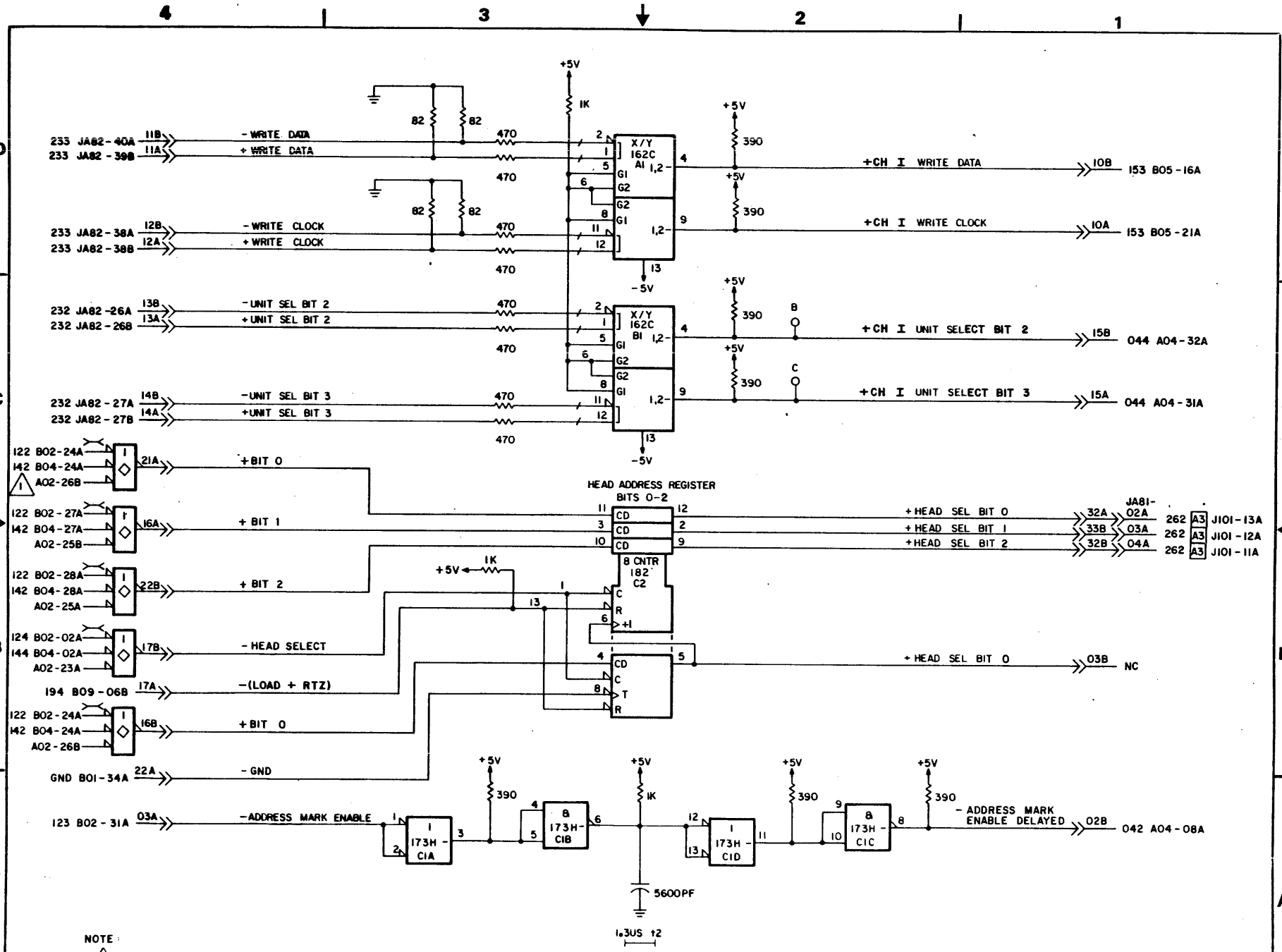

NOTE

1. A02 IS INTERNAL TEST JACK USED FOR CONNECTION TO FTU / HEAD ALIGNMENT CARD. SEE CROSS REF NO 022 FOR DETAILS

CONTROL DATA CORPORATION
NORMANDALE DIVISION

CHANNEL I RECEIVERS, HEAD ADDRESS REGISTER
(S8IOBC) LOC A2B01

CODE IDENT					
19333	C	83322240	A	B	
CROSS REF NO 113	SHEET 3	PAGE 1-67/68			

REVISION STATUS OF SHEETS

1	2	3	4	5	6	7	8	9	10	11	12	13	14	15	16	17	18	19	20
A	A	A	A																
B	A	A	B																
C	C	C	C																
D	C	C	D																
E	C	C	D																
F																			
G		G																	

REVISIONS

REV.	ECO.	DESCRIPTION	DRFT.	DATE	CHK'D
A	PE23000	RELEASED	BJE	——	
B	PE48296	CORRECT DIAGRAMS			
C	PE48402	CORR. DIA			
D	PE57173	CHG IC FAMILIES	MF	11-5-80	
E	PE55854	DOWNGRALE 80MB TO 40MB	MF	11-5-80	
F	DJ22000	XFR FRM PE	JG	72584	
G	DJ00627	CHG JRVV COMP AY	JG	72584	
	DJ72000A	FORMAT CHG			

UNUSED LOGIC ELEMENTS

ELEMENT TYPE	LOCATION	OUTPUT PIN(S)
173H	B1B	6
230LS	A1A	12

NOTES:

1. PINS 2A AND 2B MUST BE LEFT OPEN. RESERVED FOR THE BK5C1E/F UNITS. PINS ARE JUMPERED ON JUMPER PLUG SUPPLIED BY CUSTOMER.

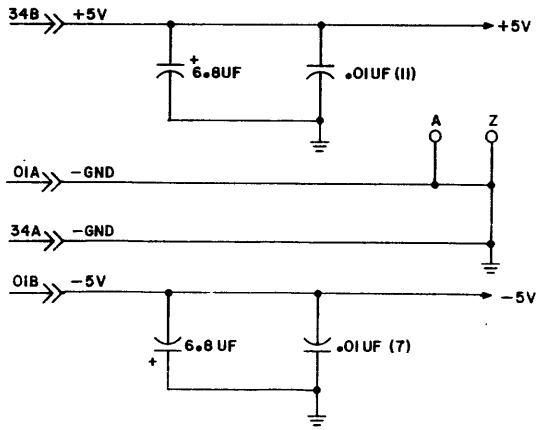

APPLICABLE TO 60 PIN I/O, BK5XX = 9762

THIS DOCUMENT TRANSFERRED TO TCD DIVISION
DATE: 7/27/84

DRAWN		8-25-7.
CHECKED		
ENGINEER		
APPROVED		

CONTROL DATA CORPORATION
TWIN CITIES DISK DIVISION

CHANNEL I
RECEIVERS DIAGRAMS
TYPE JRVV LOC A2B02

CODE IDENT				
19333	C	83322240	Z	G
CROSS REF NO 121	SHEET 1 OF 4	PAGE 1-69		

REF 83214812

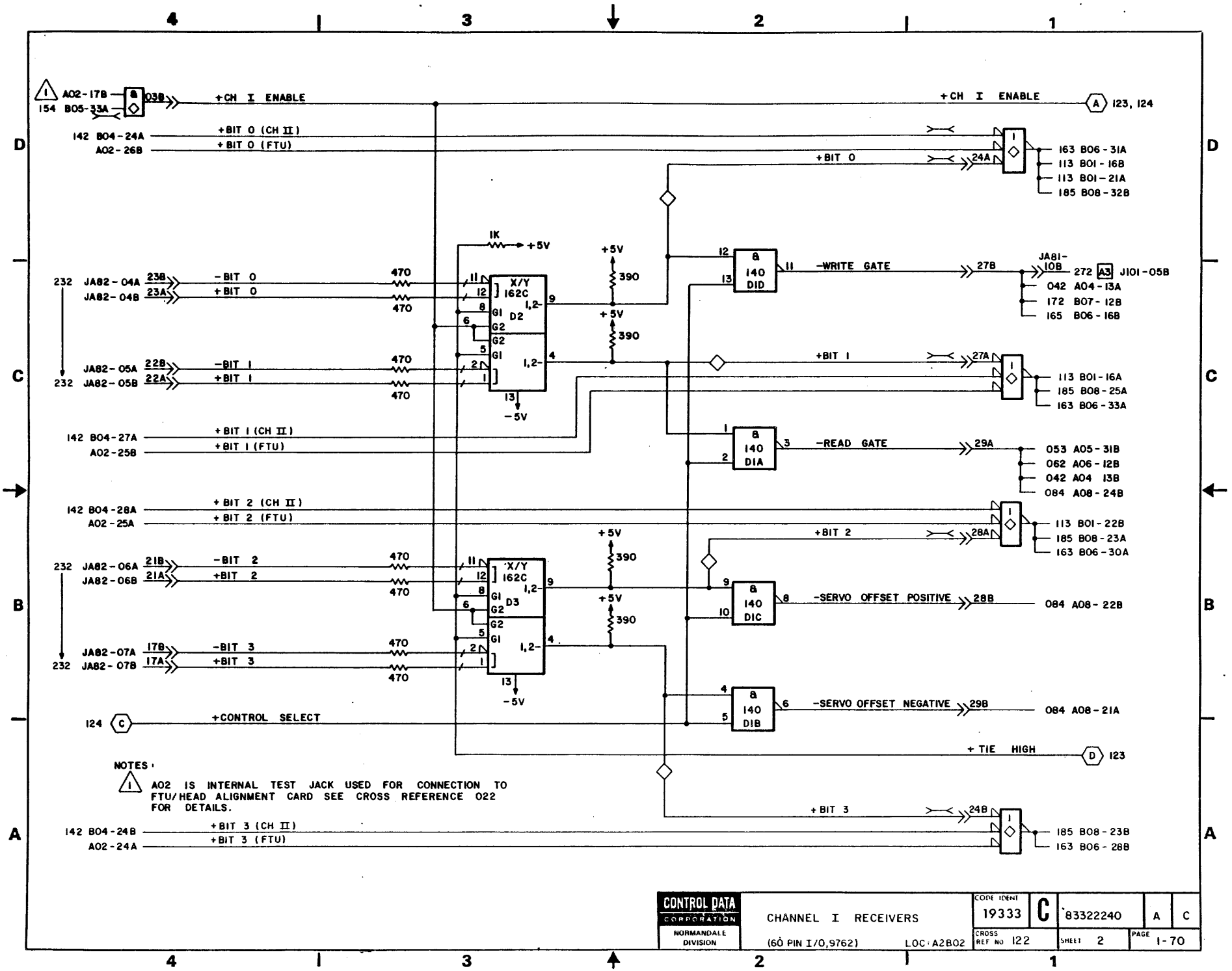

CONTROL DATA CORPORATION
NORMANDALE DIVISION

CHANNEL I RECEIVERS
(60 PIN I/O,9762) LOC: A2B02

CODE IDENT 19333 | C | 83322240 | A | C
CROSS REF NO 122 | SHEET 2 | PAGE 1-70

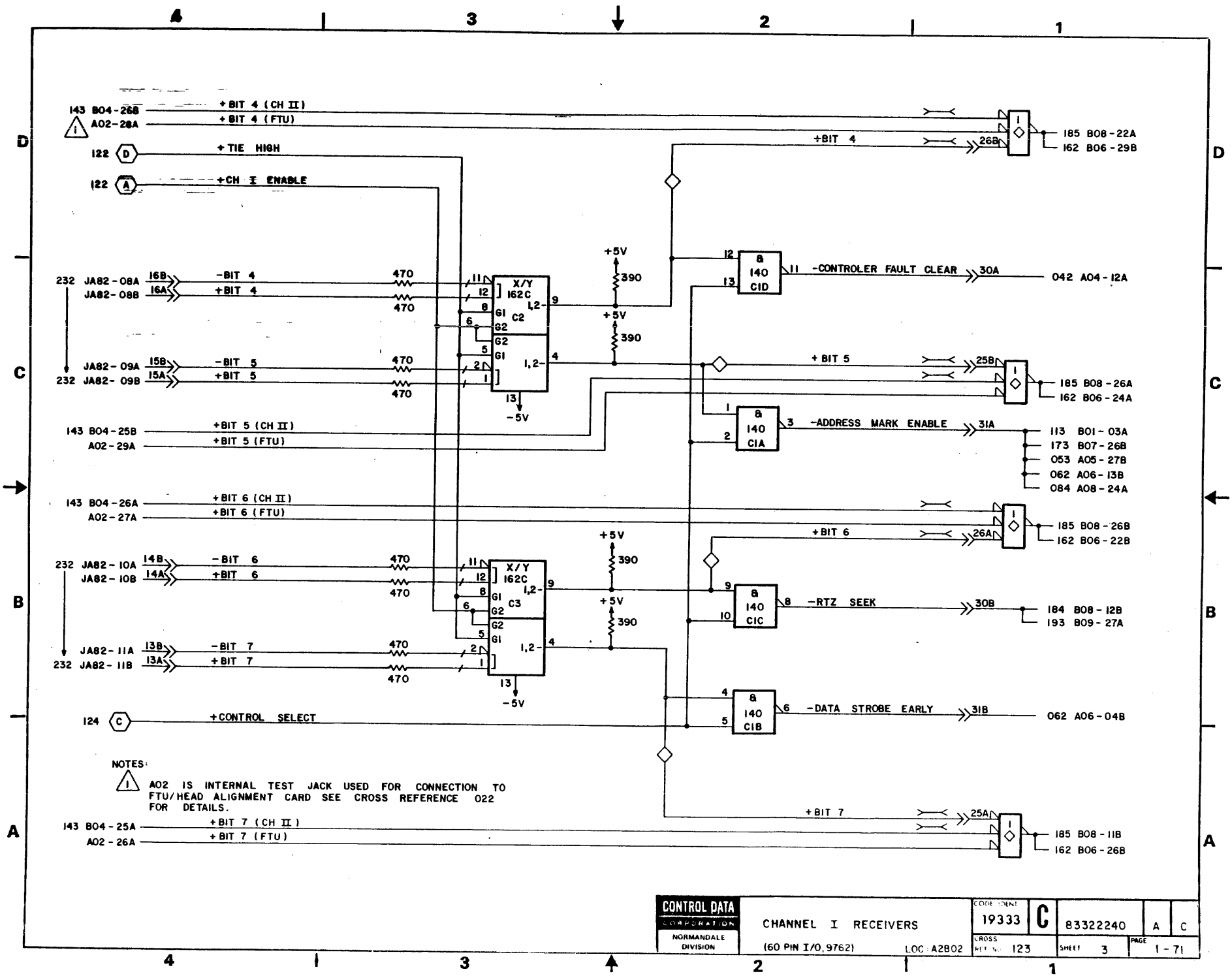

NOTES:

1. A02 IS INTERNAL TEST JACK USED FOR CONNECTION TO FTU/HEAD ALIGNMENT CARD SEE CROSS REFERENCE 022 FOR DETAILS.

CONTROL DATA CORPORATION NORMANDALE DIVISION	CHANNEL I RECEIVERS (60 PIN I/O, 9762) LOC: A2B02	CODE IDENT 19333	C	83322240	A	C
		CROSS REF NO. 123		SHEET 3	PAGE 1-71	

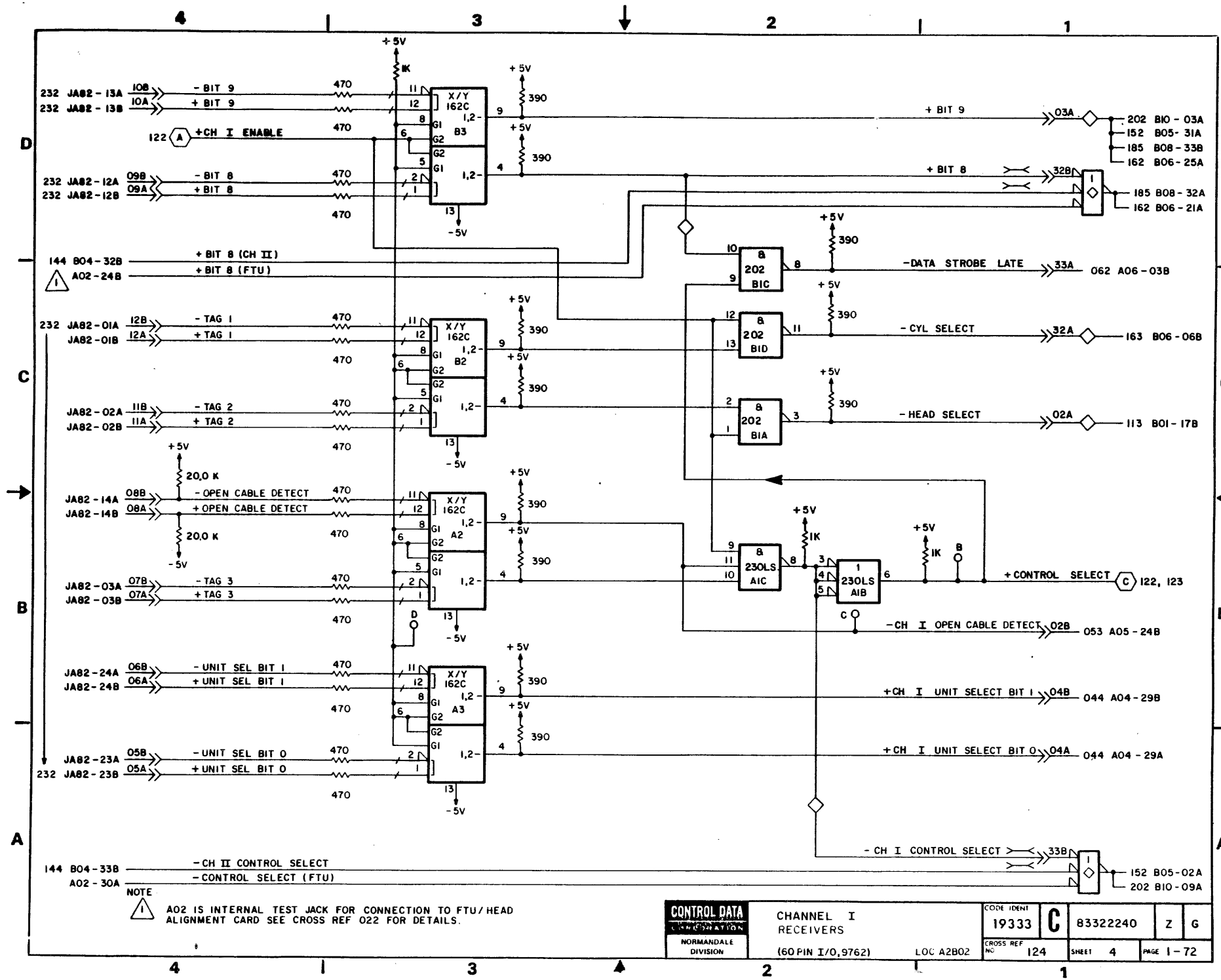
+5V
1K
232 JA82-13A
232 JA82-13B
10B
10A
- BIT 9
+ BIT 9
470
X/Y 162C
B3
1,2-
390
122 A +CH I ENABLE
232 JA82-12A
232 JA82-12B
09B
09A
- BIT 8
+ BIT 8
-5V
144 B04-32B
A02-24B
+ BIT 8 (CH II)
+ BIT 8 (FTU)
1
232 JA82-01A
JA82-01B
12B
12A
- TAG 1
+ TAG 1
B2
JA82-02A
JA82-02B
11B
11A
- TAG 2
+ TAG 2
20.0 K
JA82-14A
JA82-14B
08B
08A
- OPEN CABLE DETECT
+ OPEN CABLE DETECT
A2
JA82-03A
JA82-03B
07B
07A
- TAG 3
+ TAG 3
D
JA82-24A
JA82-24B
06B
06A
- UNIT SEL BIT 1
+ UNIT SEL BIT 1
A3
JA82-23A
232 JA82-23B
05B
05A
- UNIT SEL BIT 0
+ UNIT SEL BIT 0
144 B04-33B
A02-30A
- CH II CONTROL SELECT
- CONTROL SELECT (FTU)
+ BIT 9
03A
202 B10-03A
152 B05-31A
185 B08-33B
162 B06-25A
+ BIT 8
32B
185 B08-32A
162 B06-21A
8 202 B1C
-DATA STROBE LATE
33A
062 A06-03B
8 202 B1D
- CYL SELECT
32A
163 B06-06B
8 202 B1A
- HEAD SELECT
02A
113 B01-17B
8 230LS A1C
1 230LS A1B
+CONTROL SELECT
C 122, 123
B
-CH I OPEN CABLE DETECT
02B
053 A05-24B
+CH I UNIT SELECT BIT 1
04B
044 A04-29B
+CH I UNIT SELECT BIT 0
04A
044 A04-29A
- CH I CONTROL SELECT
33B
152 B05-02A
202 B10-09A
NOTE
1 A02 IS INTERNAL TEST JACK FOR CONNECTION TO FTU/HEAD ALIGNMENT CARD SEE CROSS REF 022 FOR DETAILS.
CONTROL DATA CORPORATION
NORMANDALE DIVISION
CHANNEL I RECEIVERS
(60 PIN I/O, 9762)
LOC A2B02
CODE IDENT 19333
C
83322240
Z
G
CROSS REF NO 124
SHEET 4
PAGE 1-72

REVISION STATUS OF SHEETS

1	2	3	4	5	6	7	8	9	10	11	12	13	14	15	16	17	18	19	20
A	A	A	A																
B	B	B	B																

REVISIONS

REV.	ECO.	DESCRIPTION	DRFT	DATE	CHK'D
A	PE23000	RELEASED	BJE	——	
B	PE48402	CORRECT DIAGRAMS	GR	12-17-76	

UNUSED LOGIC ELEMENTS

ELEMENT TYPE	LOCATION	OUTPUT PIN(S)
173H	B1B	6
230LS	A1A	12

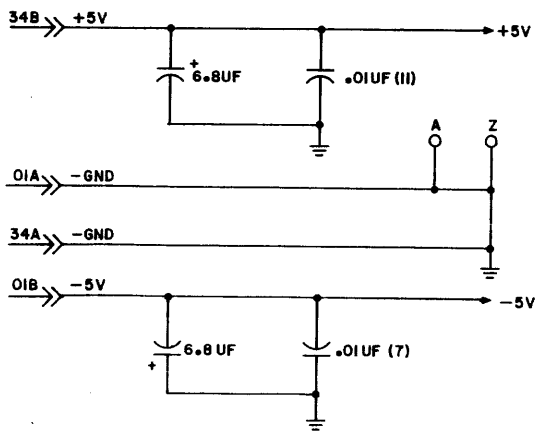

APPLICABLE TO 50 PIN I/O, BK5XX = 9762

DRAWN		CONTROL DATA CORPORATION	CHANNEL I RECEIVERS DIAGRAMS	CODE IDENT 19333	C	83322240	K B
CHECKED							
ENGINEER		NORMANDALE DIVISION	TYPE JRVV LOC A2B02	CROSS REF NO 121		SHEET 1 OF 4	PAGE 1-73
APPROVED							

REF 83214837

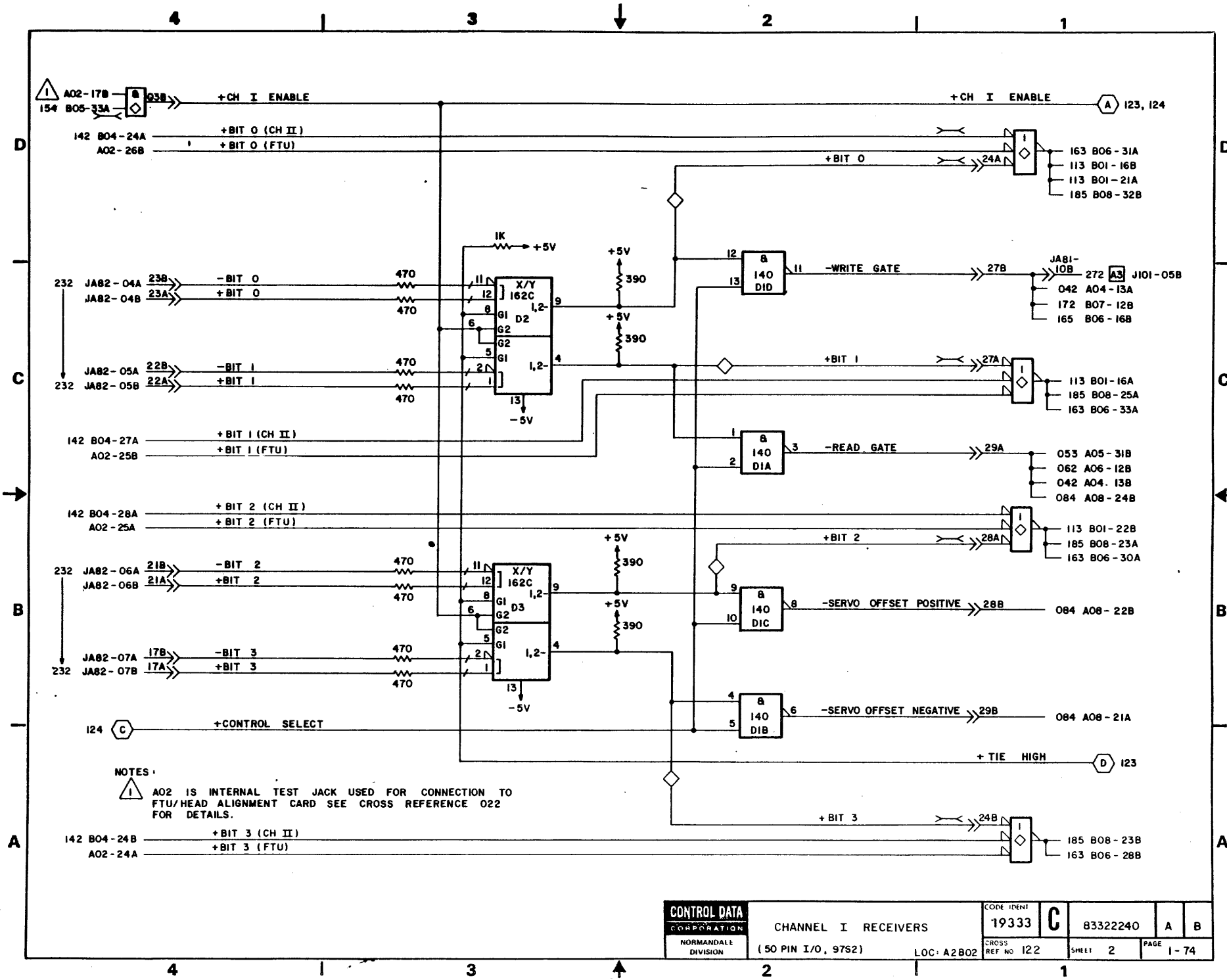

CONTROL DATA CORPORATION NORMANDALE DIVISION	CHANNEL I RECEIVERS (50 PIN I/O, 97S2) LOC: A2B02	CODE IDENT 19333	C	83322240	A	B
		CROSS REF NO 122		SHEET 2	PAGE 1-74	

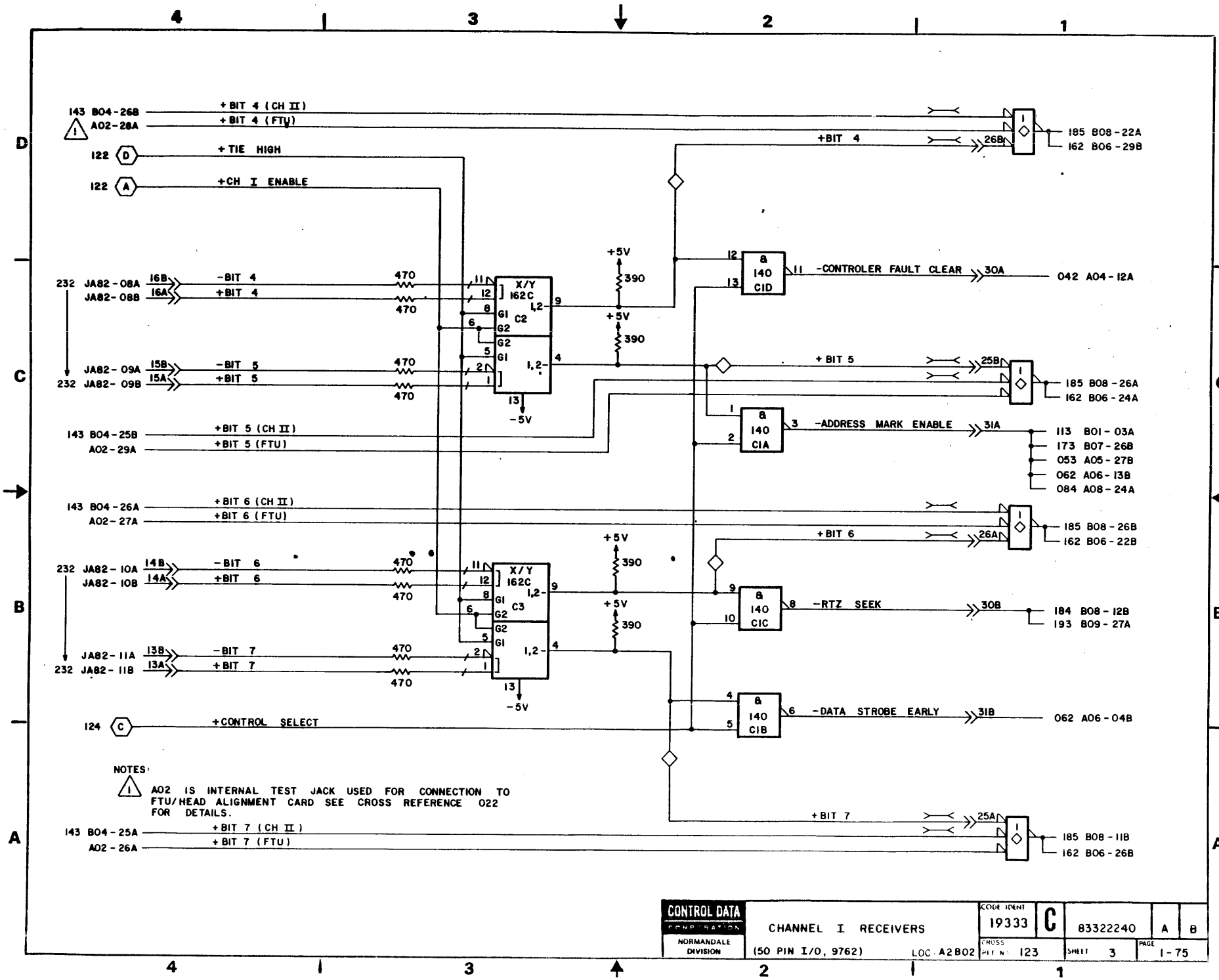

CONTROL DATA CORPORATION NORMANDALE DIVISION	CHANNEL I RECEIVERS (50 PIN I/O, 9762) LOC A2B02	CODE IDENT 19333	C	83322240	A	B	
		CROSS PIT NO. 123		SHEET 3	PAGE 1-75		

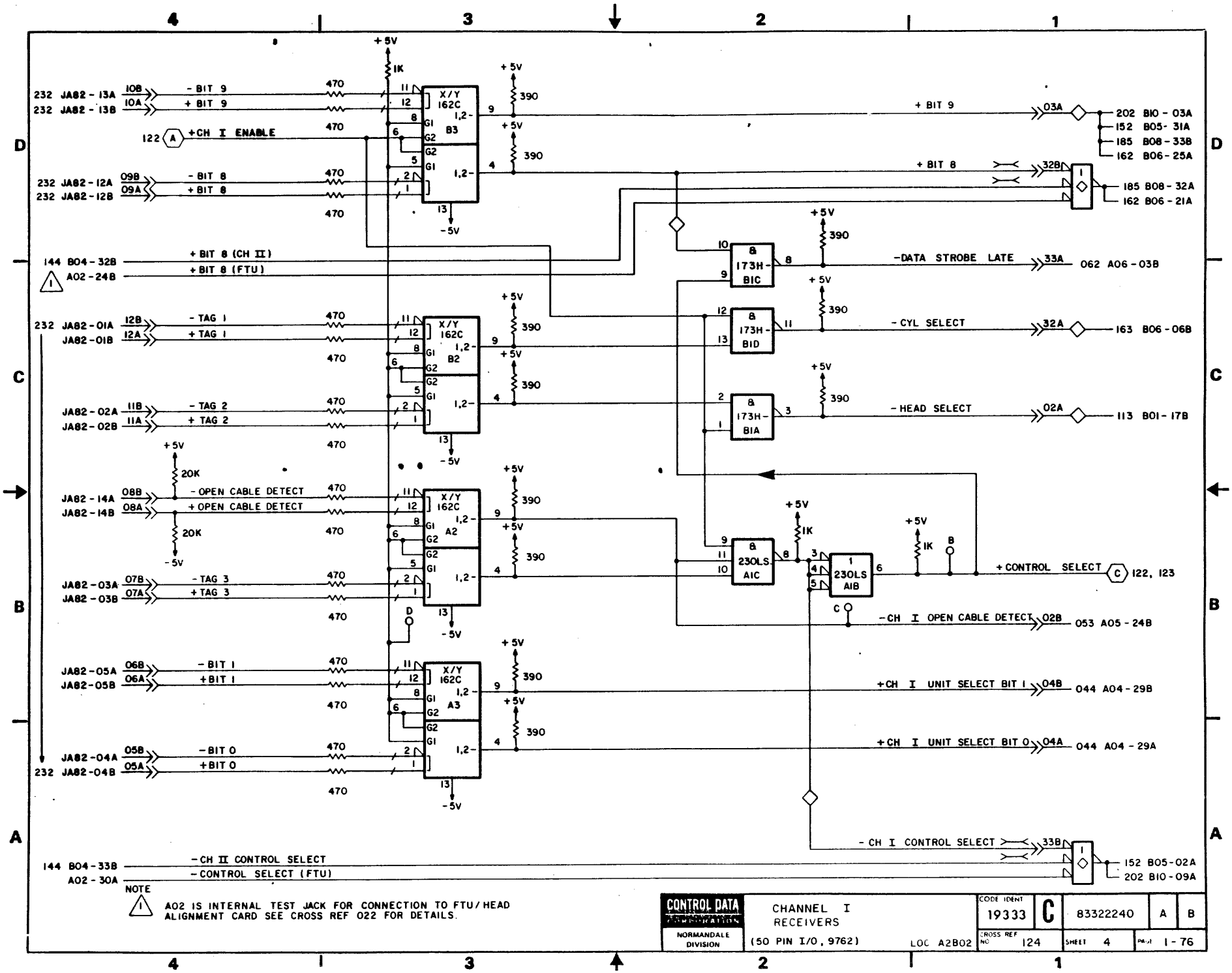
232 JA82-13A
232 JA82-13B
10B - BIT 9
10A + BIT 9
232 JA82-12A
232 JA82-12B
09B - BIT 8
09A + BIT 8
122 A +CH I ENABLE
144 B04-32B + BIT 8 (CH II)
A02-24B + BIT 8 (FTU)
232 JA82-01A
JA82-01B
12B - TAG 1
12A + TAG 1
JA82-02A
JA82-02B
11B - TAG 2
11A + TAG 2
JA82-14A
JA82-14B
08B - OPEN CABLE DETECT
08A + OPEN CABLE DETECT
JA82-03A
JA82-03B
07B - TAG 3
07A + TAG 3
JA82-05A
JA82-05B
06B - BIT 1
06A + BIT 1
JA82-04A
232 JA82-04B
05B - BIT 0
05A + BIT 0
144 B04-33B - CH II CONTROL SELECT
A02-30A - CONTROL SELECT (FTU)
X/Y 162C 1,2- B3
X/Y 162C 1,2- B2
X/Y 162C 1,2- A2
X/Y 162C 1,2- A3
8 173H-B1C
8 173H-B1D
8 173H-B1A
8 230LS A1C
1 230LS A1B
+5V
-5V
1K
20K
470
390
+ BIT 9 03A 202 B10-03A 152 B05-31A 185 B08-33B 162 B06-25A
+ BIT 8 32B 185 B08-32A 162 B06-21A
-DATA STROBE LATE 33A 062 A06-03B
-CYL SELECT 32A 163 B06-06B
-HEAD SELECT 02A 113 B01-17B
+CONTROL SELECT C 122, 123
-CH I OPEN CABLE DETECT 02B 053 A05-24B
+CH I UNIT SELECT BIT 1 04B 044 A04-29B
+CH I UNIT SELECT BIT 0 04A 044 A04-29A
-CH I CONTROL SELECT 33B 152 B05-02A 202 B10-09A
NOTE 1 A02 IS INTERNAL TEST JACK FOR CONNECTION TO FTU/HEAD ALIGNMENT CARD SEE CROSS REF 022 FOR DETAILS.
CONTROL DATA CORPORATION
NORMANDALE DIVISION
CHANNEL I RECEIVERS
(50 PIN I/O, 9762)
LOC A2B02
CODE IDENT 19333
C
83322240
A
B
CROSS REF NO 124
SHEET 4
PAGE 1-76

REVISION STATUS OF SHEETS

	1	2	3	4	5	6	7	8	9	10	11	12	13	14	15	16	17	18	19	20
A	A	A																		
B	B	B																		
C	C	B																		
D	C	D																		
E	C	E																		
F	F	E																		
G																				
H		H																		

REVISIONS

REV	ECO	DESCRIPTION	DRFT	DATE	CHK'D
A	PE23777	RELEASED			
B	PE48402	CORRECT DIAGRAMS	WEB	12-17-76	
C	PE48568	ERR CORR	DM	7-25-77	
D	PE57173	CHG IC FAMILIES	MF	11-5-80	
E	PE60148	CHG LDS	MF	11-5-80	
F	DJ00201	PLO CLOCK ERROR	MJ	5-13-82	
G	DJ22000	XFR FRM PE	JG	7-2584	
H	DJ00669	CHG FTVV IC/CAPS			
	DJ7200GA	FORMAT CHG	JG		

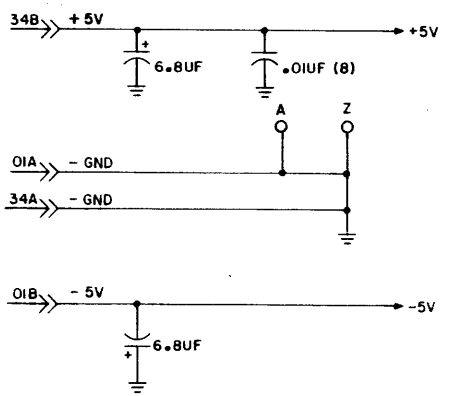

APPLICABLE TO 60 PIN I/O

THIS DOCUMENT TRANSFERRED TO TCD DIVISION DATE: 7/27/84

DRAWN	G Ragnit	8/19/76
CHECKED		
ENGINEER		
APPROVED		

CONTROL DATA — TWIN CITIES DISK DIVISION

CHANNEL II TRANSMITTERS AND RECEIVERS DIAGRAMS

TYPE FTVV LOC A2B03

CODE IDENT				
19333	C	83322240	Z	H

CROSS REF NO 131 | SHEET 1 OF 3 | PAGE 1-77

REF 83214813

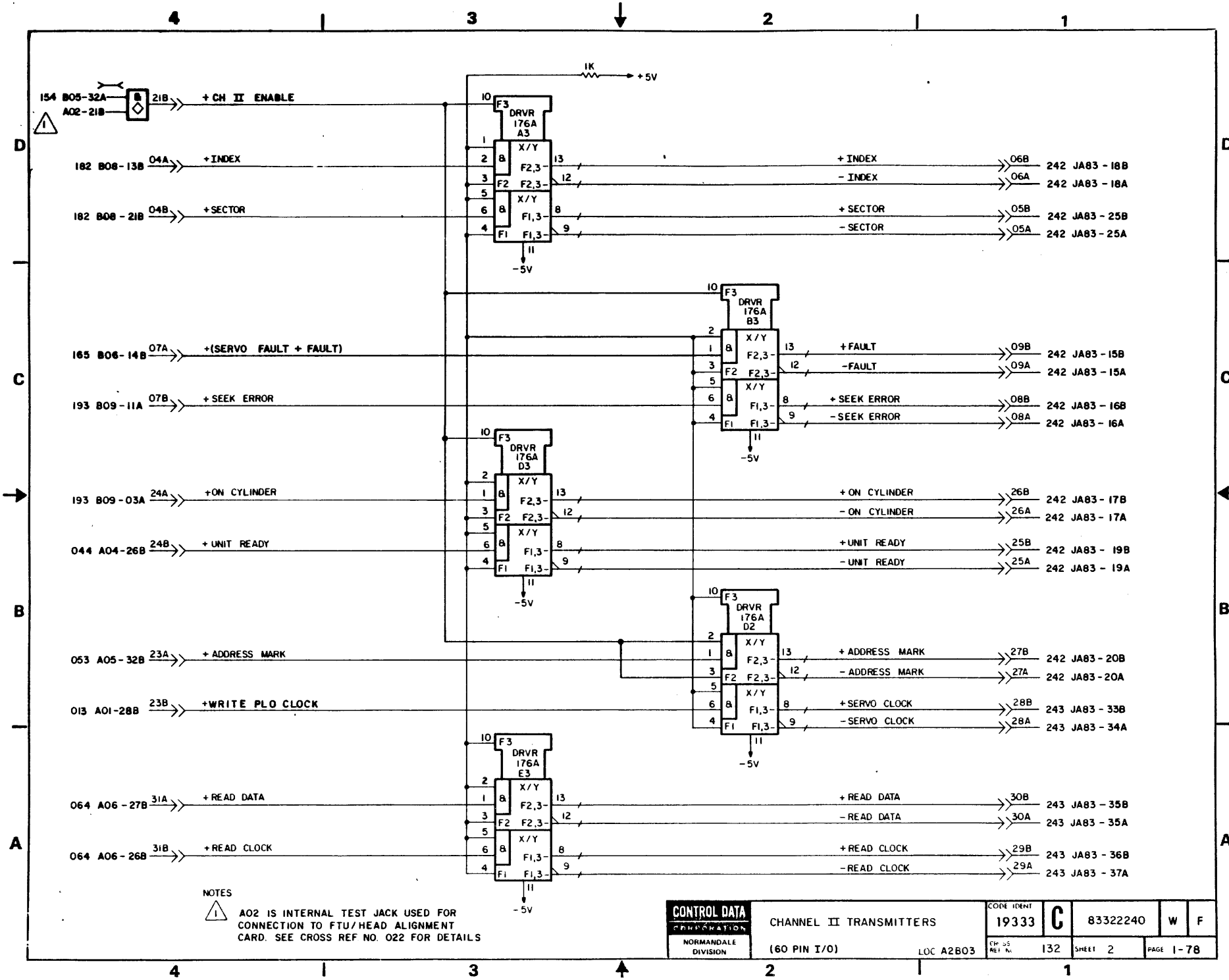

NOTES

1. A02 IS INTERNAL TEST JACK USED FOR CONNECTION TO FTU/HEAD ALIGNMENT CARD. SEE CROSS REF NO. 022 FOR DETAILS

CONTROL DATA CORPORATION
NORMANDALE DIVISION

CHANNEL II TRANSMITTERS
(60 PIN I/O) LOC A2B03

CODE IDENT 19333 | C | 83322240 | W | F
CROSS REF NO. 132 | SHEET 2 | PAGE 1-78

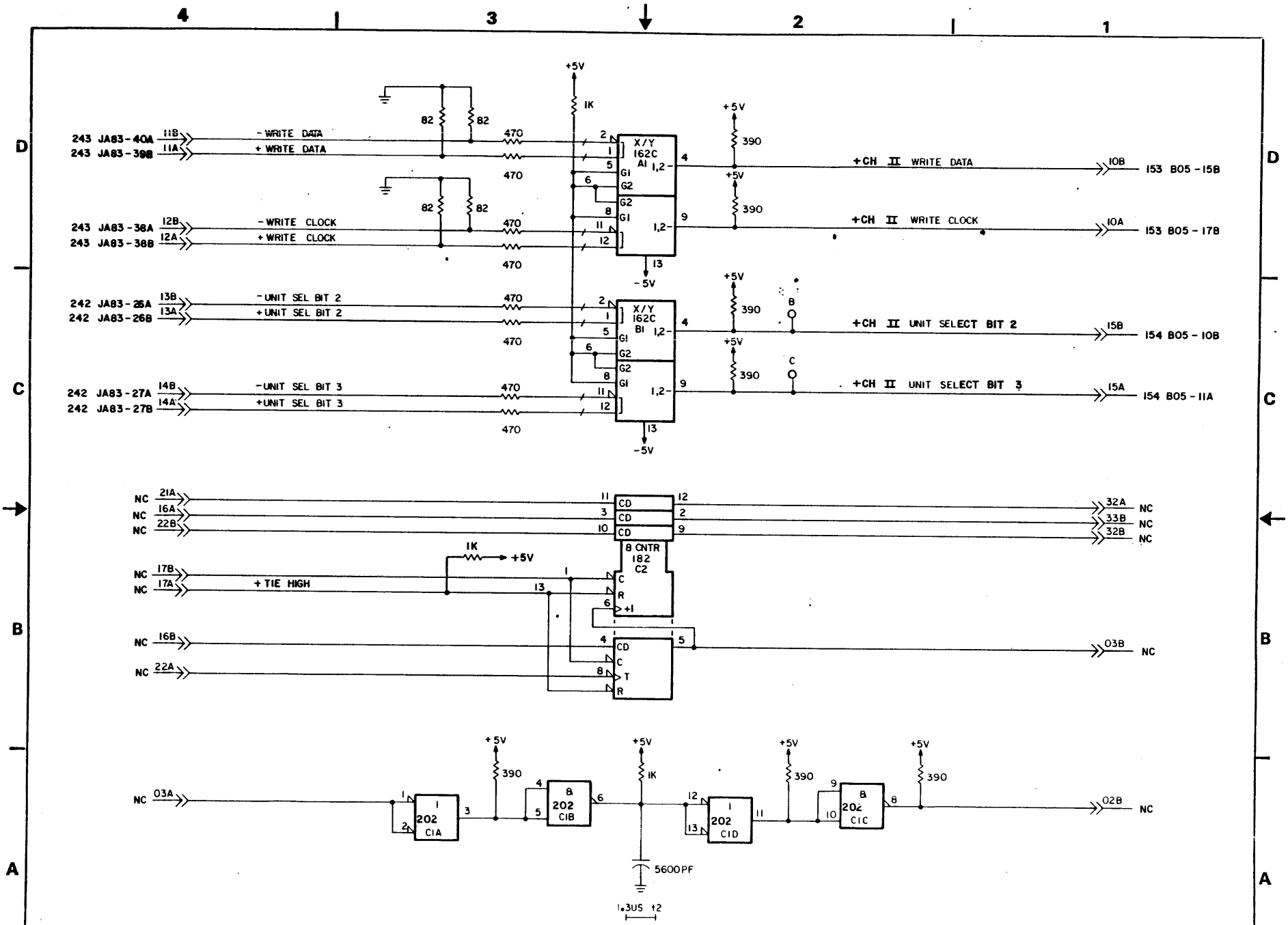

CONTROL DATA INFORMATION NORMANDALE DIVISION	CHANNEL II RECEIVERS (60 PIN I/O) LOC A2B03	CODE IDENT 19333	C	83322240	Z	H
		CROSS REF. 133		SHEET 3	PAGE 1-79/80	

REVISION STATUS OF SHEETS

1	2	3	4	5	6	7	8	9	10	11	12	13	14	15	16	17	18	19	20
A	A	A																	
B	B	B																	
C	C	B																	
D	C	D																	
E	E	D																	

REVISIONS

REV.	ECO	DESCRIPTION	DRFT	DATE	CHK'D
A	PE23000	RELEASED			
B	PE48402	ERR. CORR.			
C	PE48568	ERR. CORR	DM	7-25-77	
D	PE60148	CHG L.D.S	MF	11-5-80	
E	DJ00201	PLO CLOCK ERROR	MJ	5-13-82	DGD

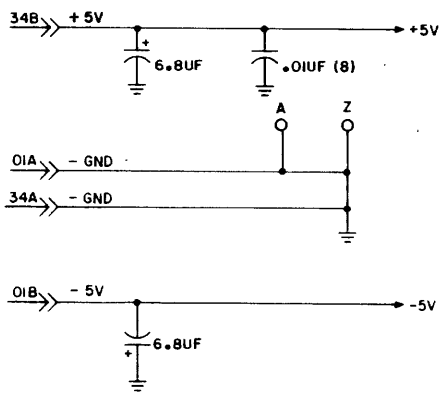

APPLICABLE TO 50 PIN I/O

DRAWN	G Rabine 1/9/76	CONTROL DATA CORPORATION	CHANNEL II TRANSMITTERS AND RECEIVERS DIAGRAMS	CODE IDENT 19333	C	83322240	W E
CHECKED							
ENGINEER		NORMANDALE DIVISION	TYPE JTVV LOC A2B03	CROSS REF NO 131		SHEET 1 OF 3	PAGE 1-81
APPROVED							

REF 83214838

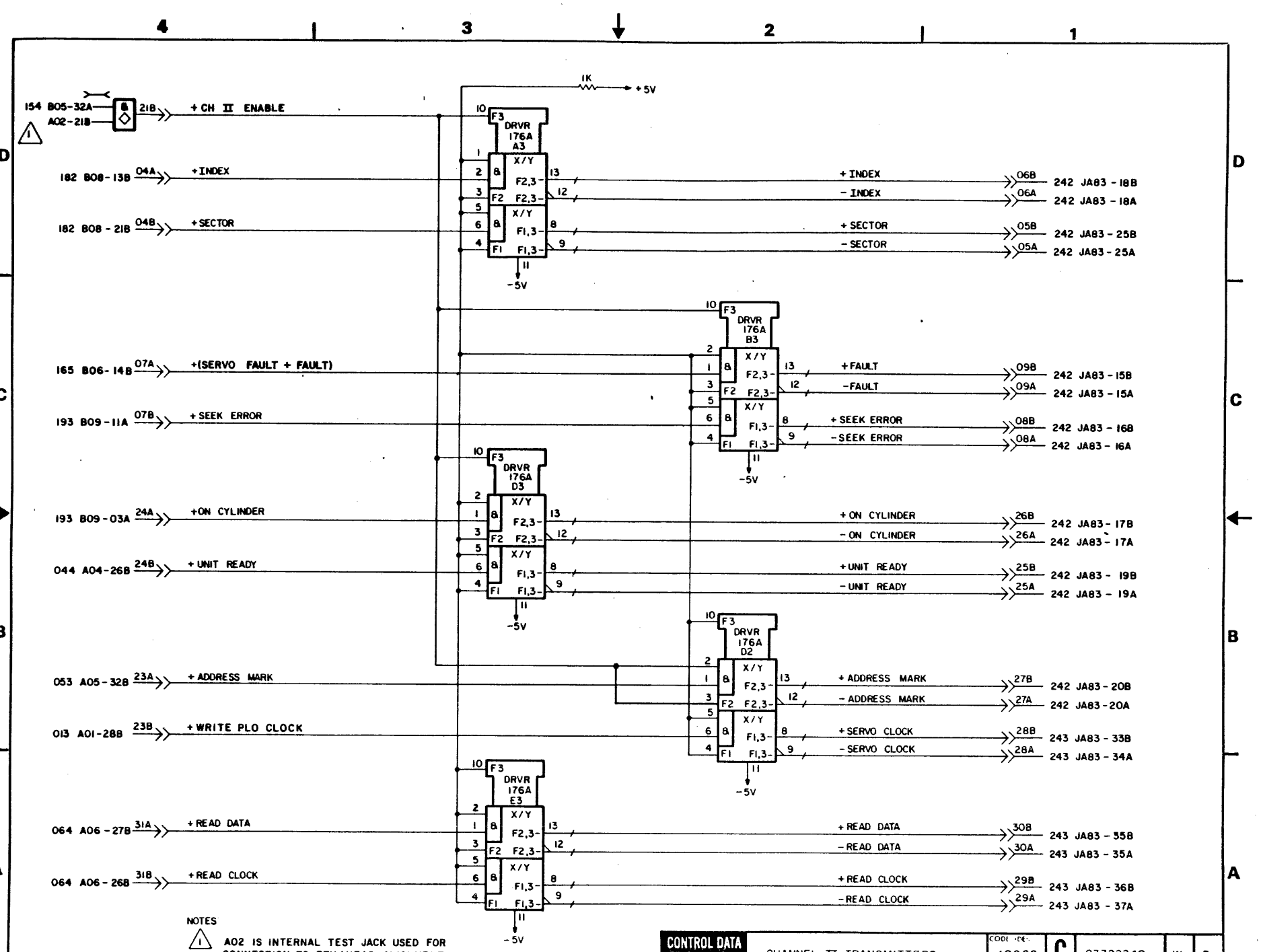

NOTES

1. A02 IS INTERNAL TEST JACK USED FOR CONNECTION TO FTU/HEAD ALIGNMENT CARD. SEE CROSS REF NO. 022 FOR DETAILS

CONTROL DATA CORPORATION
NORMANDALE DIVISION

CHANNEL II TRANSMITTERS
(50 PIN I/O) LOC A2B03

CODE IDENT 19333 | C | 83322240 | W | D
CROSS REF NO. 132 | SHEET 2 | PAGE 1-82

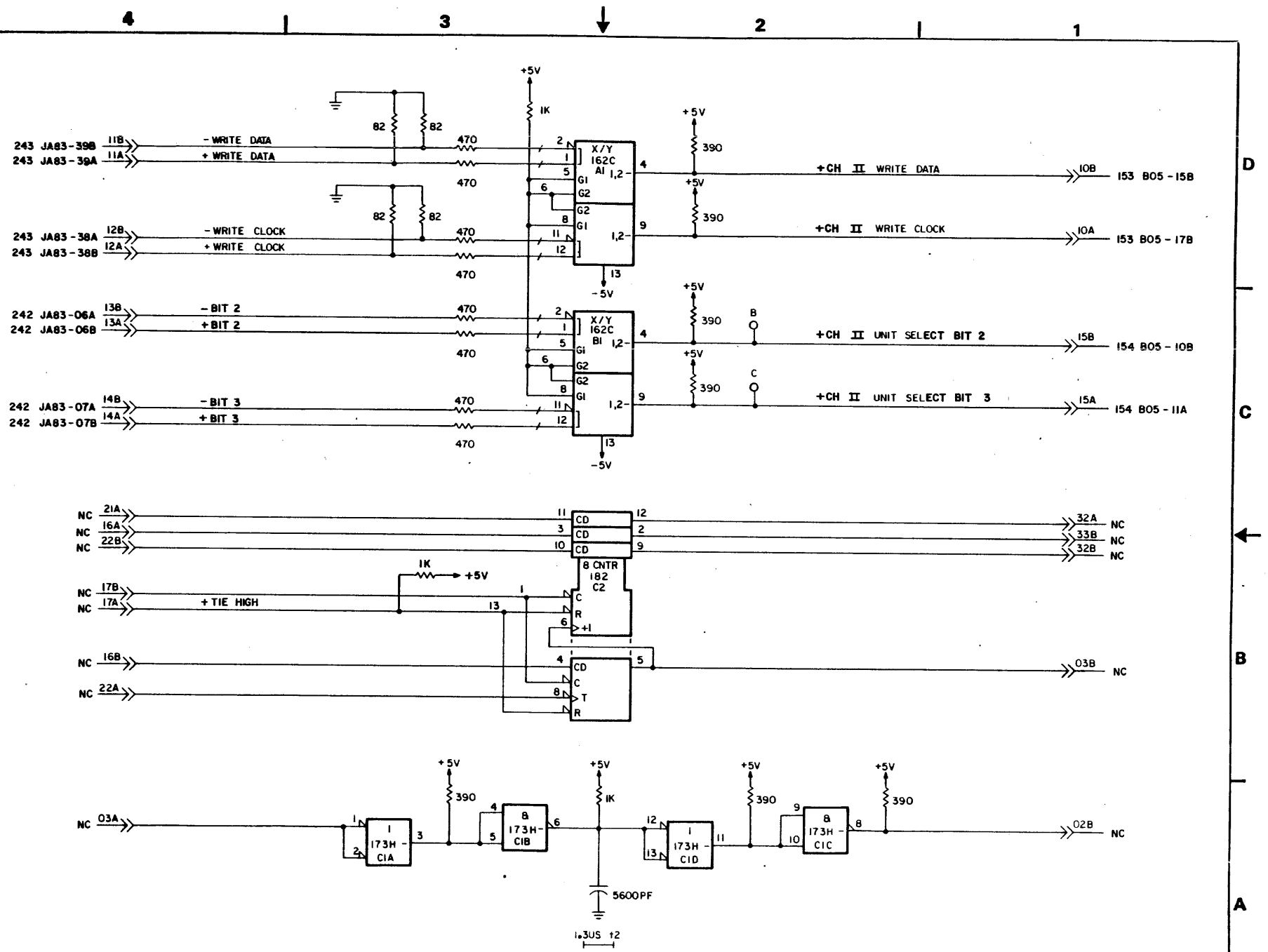

CONTROL DATA CORPORATION NORMANDALE DIVISION	CHANNEL II RECEIVERS (50 PIN I/O) LOC A2B03	CODE IDENT 19333	C	83322240	T	D	
		CROSS REF N. 133		SHEET 3		PAGE 1-83/84	

REVISION STATUS OF SHEETS

1	2	3	4	5	6	7	8	9	10	11	12	13	14	15	16	17	18	19	20
A	A	A																	
B	B	B																	
C	C	B																	
D	D																		

REVISIONS

REV.	ECO	DESCRIPTION	DRFT	DATE	CHK'D
A	PE23000	RELEASED			
B	PE48402	CORRECT DIAGRAMS	GR	12-17-76	
C	PE48568	CORR. ERR.	DM	7-25-77	
D	0J00201	PLO CLOCK ERROR	MJ	5-25-83	

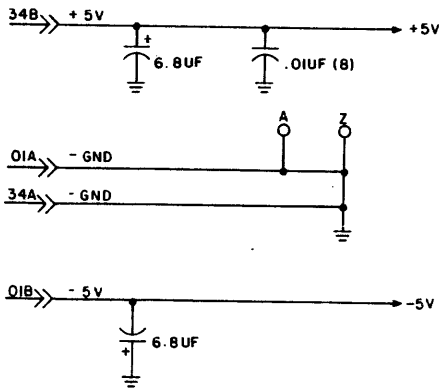

APPLICABLE TO INDEX AND SECTOR IN B CABLE.

DRAWN		MAGNETIC PERIPHERALS INC.	CHANNEL II TRANSMITTERS AND RECEIVERS DIAGRAMS
CHECKED			
ENGINEER			
APPROVED			TYPE: GTVV LOC A2B03

NORMANDALE OPERATIONS | C | DWG NO 83322240 | CD Y | REV D

CODE IDENT 19333 | CROSS REF NO 131 | SHEET 1 OF 3 | PAGE 1-85

REF: 83214847

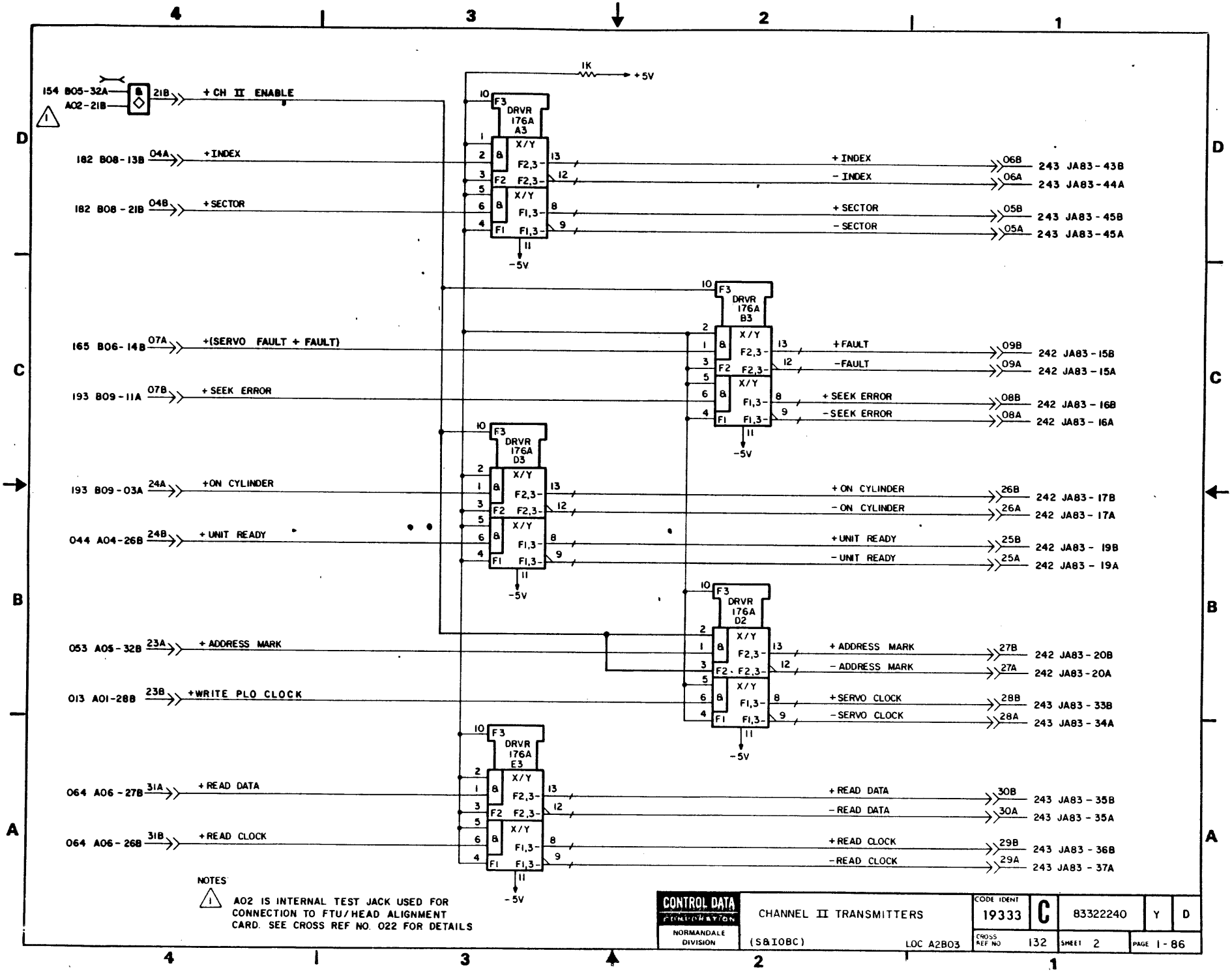
154 B05-32A
A02-21B
21B
+CH II ENABLE
1K
+5V
182 B08-13B
04A
+INDEX
182 B08-21B
04B
+SECTOR
DRVR 176A A3
+INDEX
-INDEX
+SECTOR
-SECTOR
06B
06A
05B
05A
243 JA83-43B
243 JA83-44A
243 JA83-45B
243 JA83-45A
-5V
165 B06-14B
07A
+(SERVO FAULT + FAULT)
193 B09-11A
07B
+SEEK ERROR
DRVR 176A B3
+FAULT
-FAULT
+SEEK ERROR
-SEEK ERROR
09B
09A
08B
08A
242 JA83-15B
242 JA83-15A
242 JA83-16B
242 JA83-16A
193 B09-03A
24A
+ON CYLINDER
044 A04-26B
24B
+UNIT READY
DRVR 176A D3
+ON CYLINDER
-ON CYLINDER
+UNIT READY
-UNIT READY
26B
26A
25B
25A
242 JA83-17B
242 JA83-17A
242 JA83-19B
242 JA83-19A
053 A05-32B
23A
+ADDRESS MARK
013 A01-28B
23B
+WRITE PLO CLOCK
DRVR 176A D2
+ADDRESS MARK
-ADDRESS MARK
+SERVO CLOCK
-SERVO CLOCK
27B
27A
28B
28A
242 JA83-20B
242 JA83-20A
243 JA83-33B
243 JA83-34A
064 A06-27B
31A
+READ DATA
064 A06-26B
31B
+READ CLOCK
DRVR 176A E3
+READ DATA
-READ DATA
+READ CLOCK
-READ CLOCK
30B
30A
29B
29A
243 JA83-35B
243 JA83-35A
243 JA83-36B
243 JA83-37A
NOTES
1 A02 IS INTERNAL TEST JACK USED FOR CONNECTION TO FTU/HEAD ALIGNMENT CARD. SEE CROSS REF NO. 022 FOR DETAILS
CONTROL DATA CORPORATION
NORMANDALE DIVISION
CHANNEL II TRANSMITTERS
(S&IOBC)
LOC A2B03
CODE IDENT 19333
C
83322240
Y
D
CROSS REF NO 132
SHEET 2
PAGE 1-86

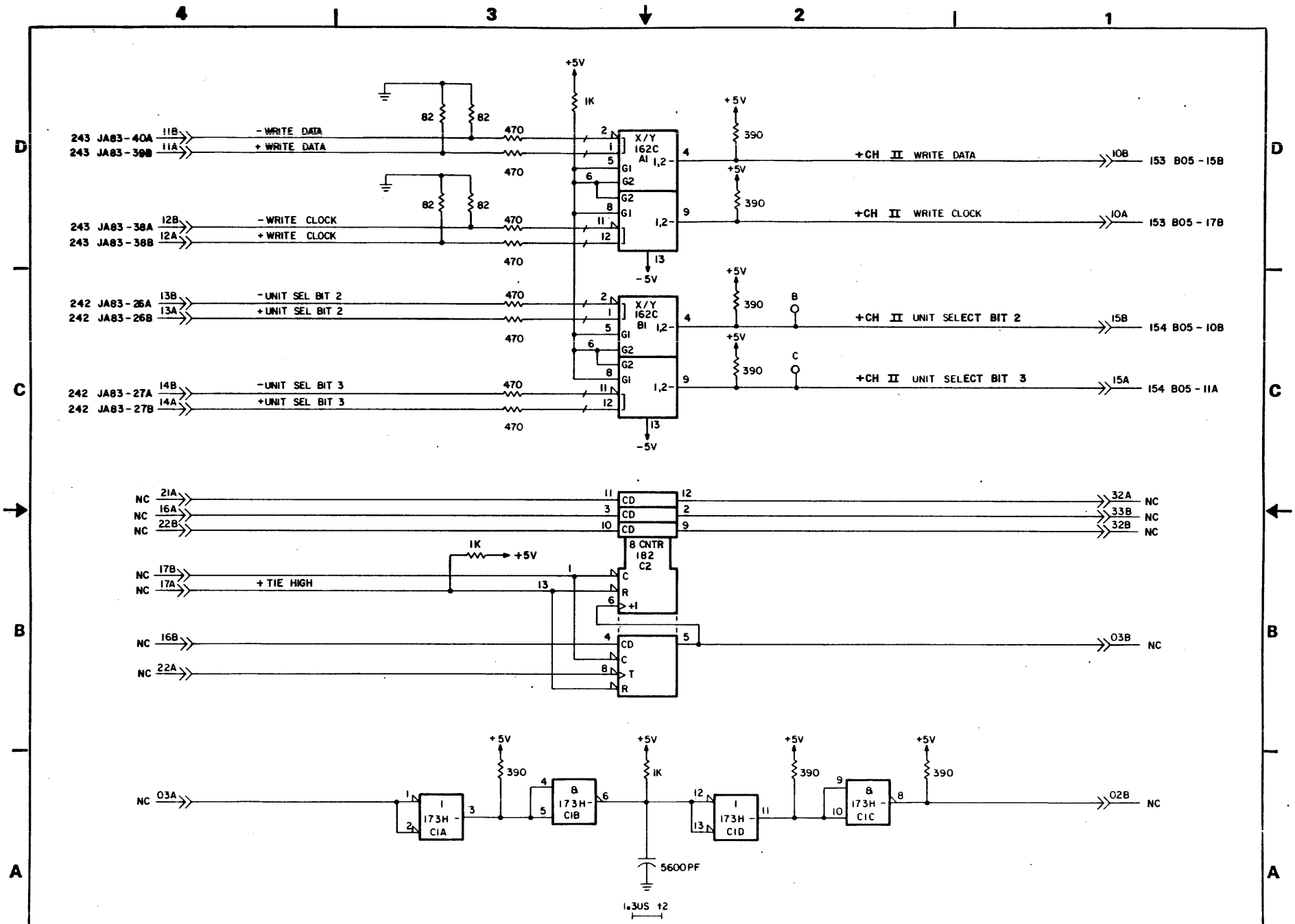

CONTROL DATA CORPORATION NORMANDALE DIVISION	CHANNEL II RECEIVERS (S&IOBC) LOC A2B03	CODE IDENT 19333	C	83322240	A	B
		CROSS REF NO 133		SHEET 3	PAGE 1-87/88	

REVISION STATUS OF SHEETS

1	2	3	4	5	6	7	8	9	10	11	12	13	14	15	16	17	18	19	20
A	A	A	A																
B	B	A	B																
C	C	C	C																
D	C	C	D																
E																			
F			F																

REVISIONS

REV	ECO	DESCRIPTION	DRFT	DATE	CHK'D
A	PE23000	RELEASED	BJE	——	
B	PE48296	CORRECT DIAGRAMS	SB	11-2-76	
C	PE48402	CORRECT DIAGRAMS	WEB	12-17-76	
D	PE57173	CHG IC FAMILIES	MF	11-5-80	
E	DJ22000	XFR FRM PE	JG	72584	
F	DJ00627	CHG JRVV COMP AY	JG	72584	
	DJ72000A	FORMAT CHG			

UNUSED LOGIC ELEMENTS

ELEMENT TYPE	LOCATION	OUTPUT PIN(S)
173H	B1B	6
230LS	A1A	12

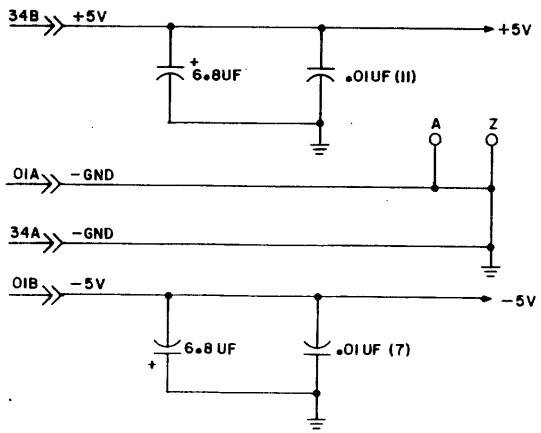

APPLICABLE TO 60 PIN I/O, BK5XX = 9762

THIS DOCUMENT TRANSFERRED TO TCD DIVISION
DATE: 7/27/84

CONTROL DATA CORPORATION
TWIN CITIES DISK DIVISION

CHANNEL II
RECEIVERS DIAGRAMS
TYPE JRVV LOC A2B04

CODE IDENT				
19333	C	83322240	Z	F
SIZE 141	SHEET 1 OF 4	PAGE 1-89		

REF 83214814

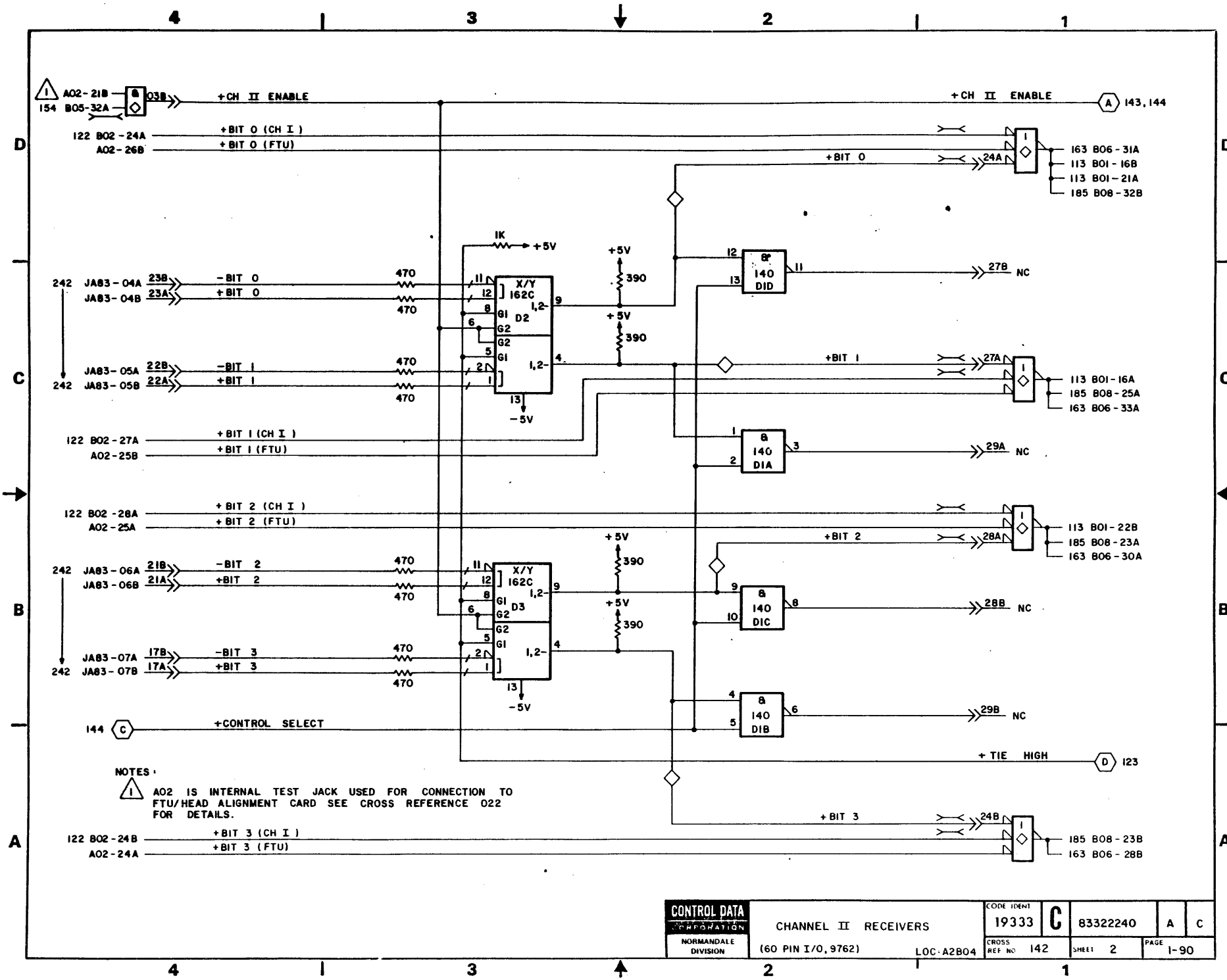

NOTES:

1. A02 IS INTERNAL TEST JACK USED FOR CONNECTION TO FTU/HEAD ALIGNMENT CARD SEE CROSS REFERENCE 022 FOR DETAILS.

CONTROL DATA CORPORATION NORMANDALE DIVISION	CHANNEL II RECEIVERS (60 PIN I/O, 9762) LOC-A2B04	CODE IDENT 19333	C	83322240	A	C
		CROSS REF NO 142		SHEET 2	PAGE 1-90	

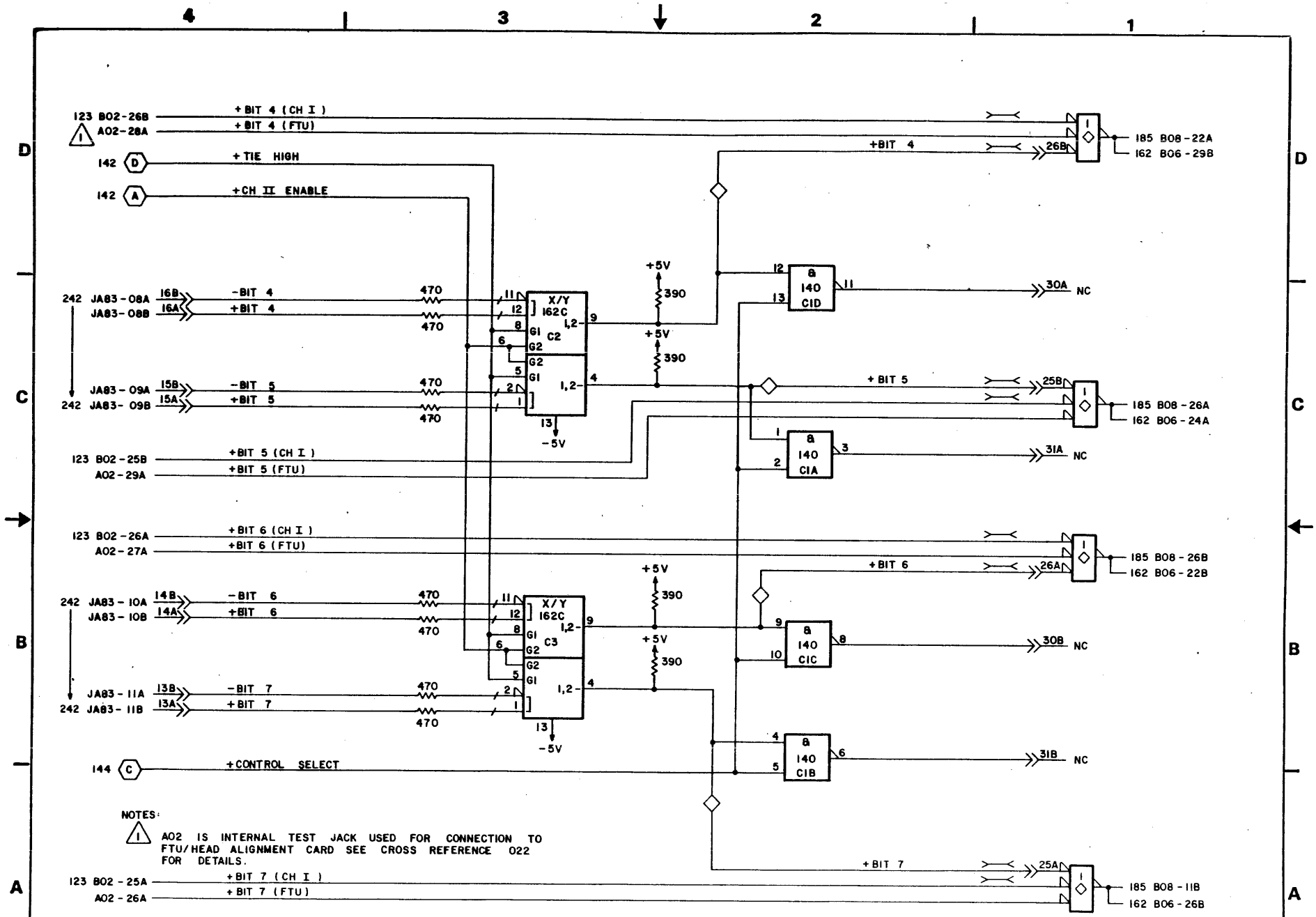

NOTES:

1. A02 IS INTERNAL TEST JACK USED FOR CONNECTION TO FTU/HEAD ALIGNMENT CARD SEE CROSS REFERENCE 022 FOR DETAILS.

CONTROL DATA CORPORATION NORMANDALE DIVISION	CHANNEL II RECEIVERS (60 PIN I/O,9762) LOC: A2B04	CODE IDENT 19333	C	83322240	A	C	
		CROSS REF NO: 143		SHEET 3	PAGE 1-91		

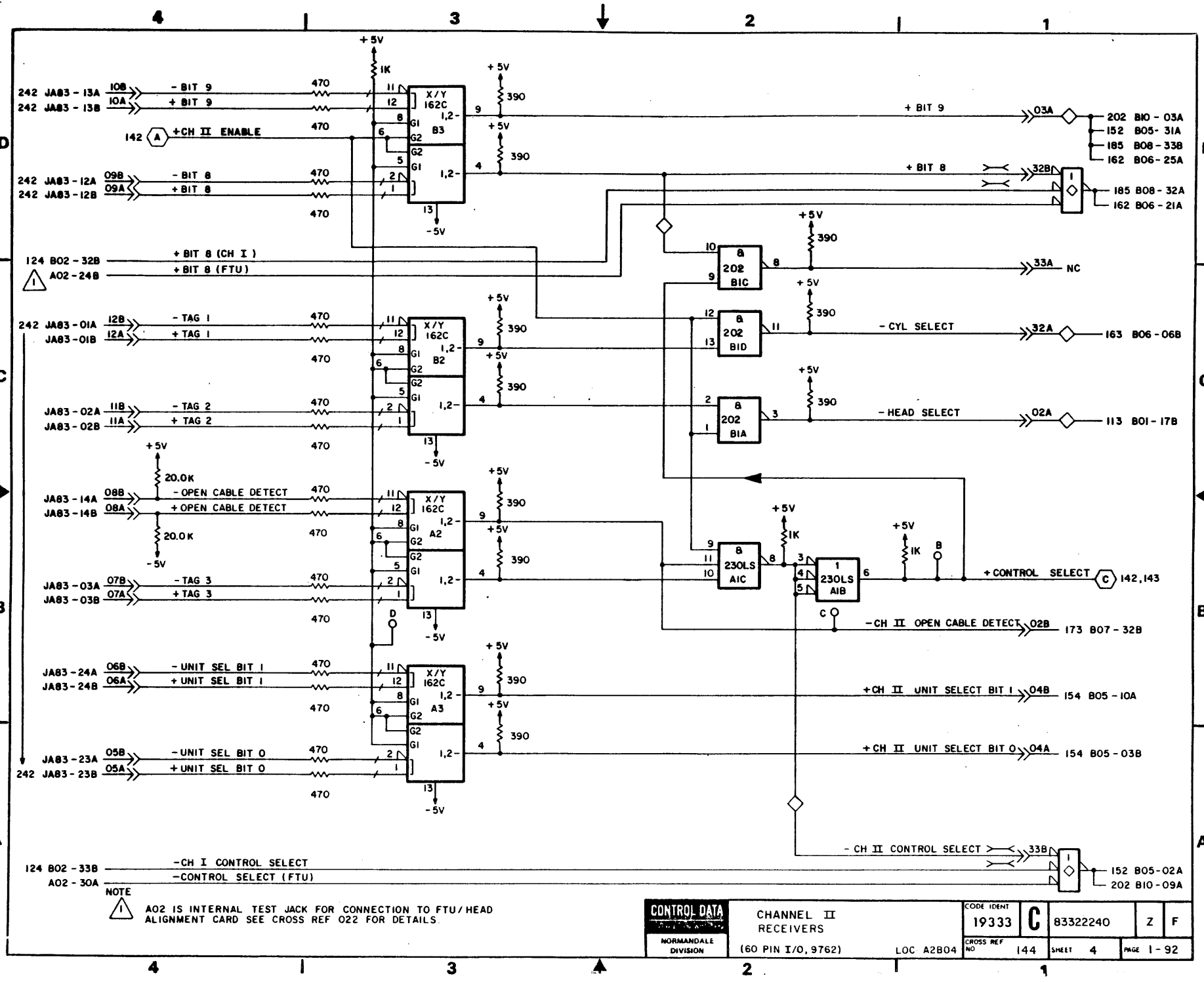

NOTE

1 A02 IS INTERNAL TEST JACK FOR CONNECTION TO FTU/HEAD ALIGNMENT CARD SEE CROSS REF 022 FOR DETAILS.

CONTROL DATA NORMANDALE DIVISION	CHANNEL II RECEIVERS (60 PIN I/O, 9762)	LOC A2B04	CODE IDENT 19333	C	83322240	Z	F
			CROSS REF NO 144		SHEET 4	PAGE 1-92	

REVISION STATUS OF SHEETS

1	2	3	4	5	6	7	8	9	10	11	12	13	14	15	16	17	18	19	20
A	A	A	A																
B	B	B	B																

REVISIONS

REV.	ECO.	DESCRIPTION	DRFT	DATE	CHK'D
A	PE23000	RELEASED	BJE	—	
B	PE48402	CORR. DIA			

UNUSED LOGIC ELEMENTS

ELEMENT TYPE	LOCATION	OUTPUT PIN(S)
173H	B1B	6
230LS	A1A	12

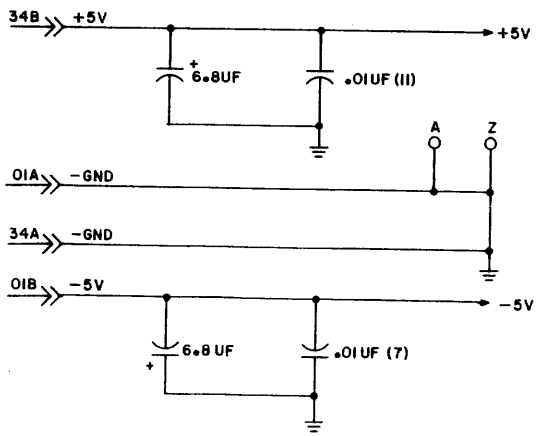

APPLICABLE TO 50 PIN I/O, BK5XX = 9762

CONTROL DATA CORPORATION, NORMANDALE DIVISION	CHANNEL II RECEIVERS DIAGRAMS	CODE IDENT 19333	C	83322240	K	B
	TYPE JRVV	SIZE 141	SHEET 1 OF 4	PAGE 1-93		

REF 83214839

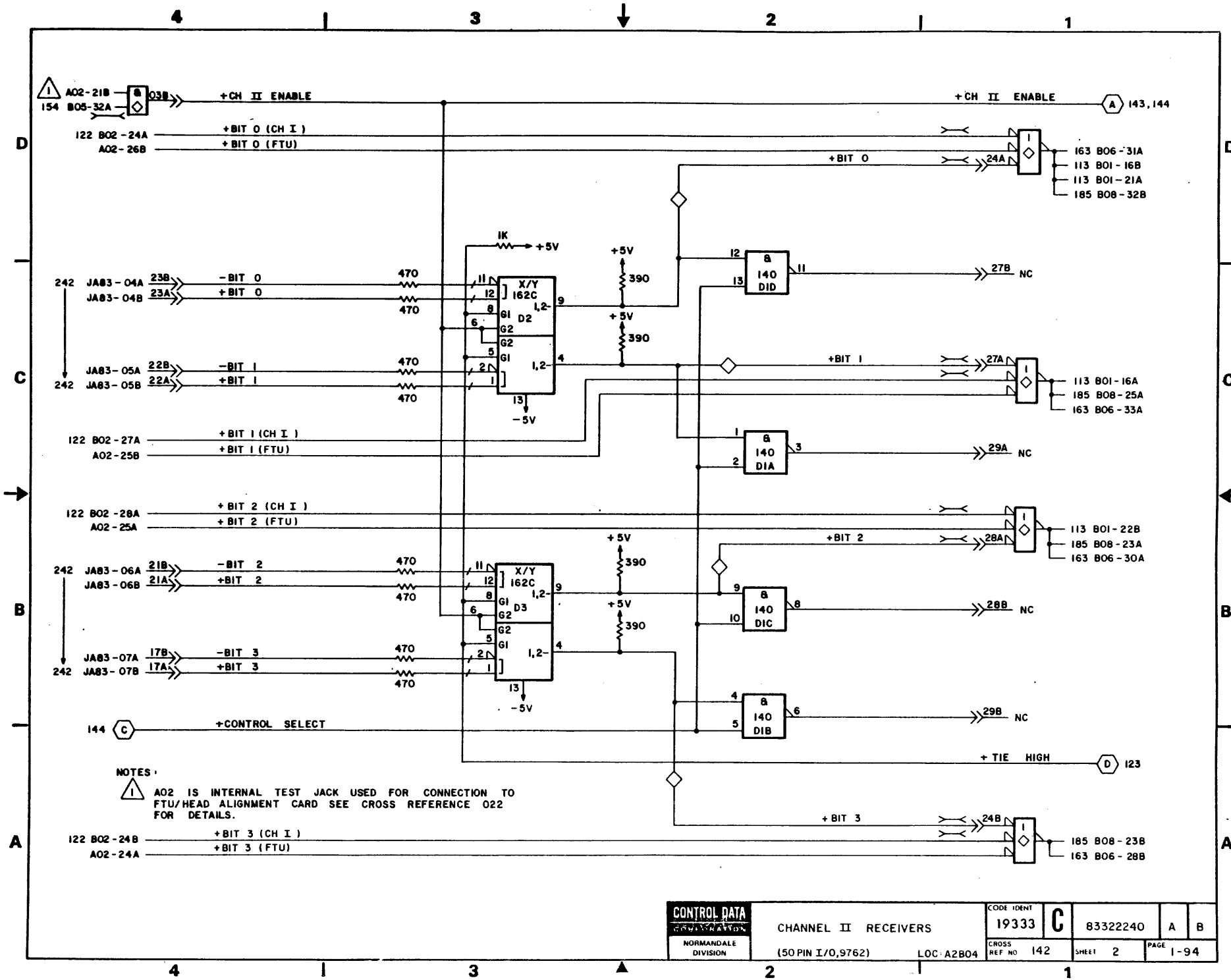

CONTROL DATA CORPORATION NORMANDALE DIVISION	CHANNEL II RECEIVERS (50 PIN I/O, 9762) LOC: A2B04	CODE IDENT 19333	C	83322240	A	B
		CROSS REF NO 142		SHEET 2	PAGE 1-94	

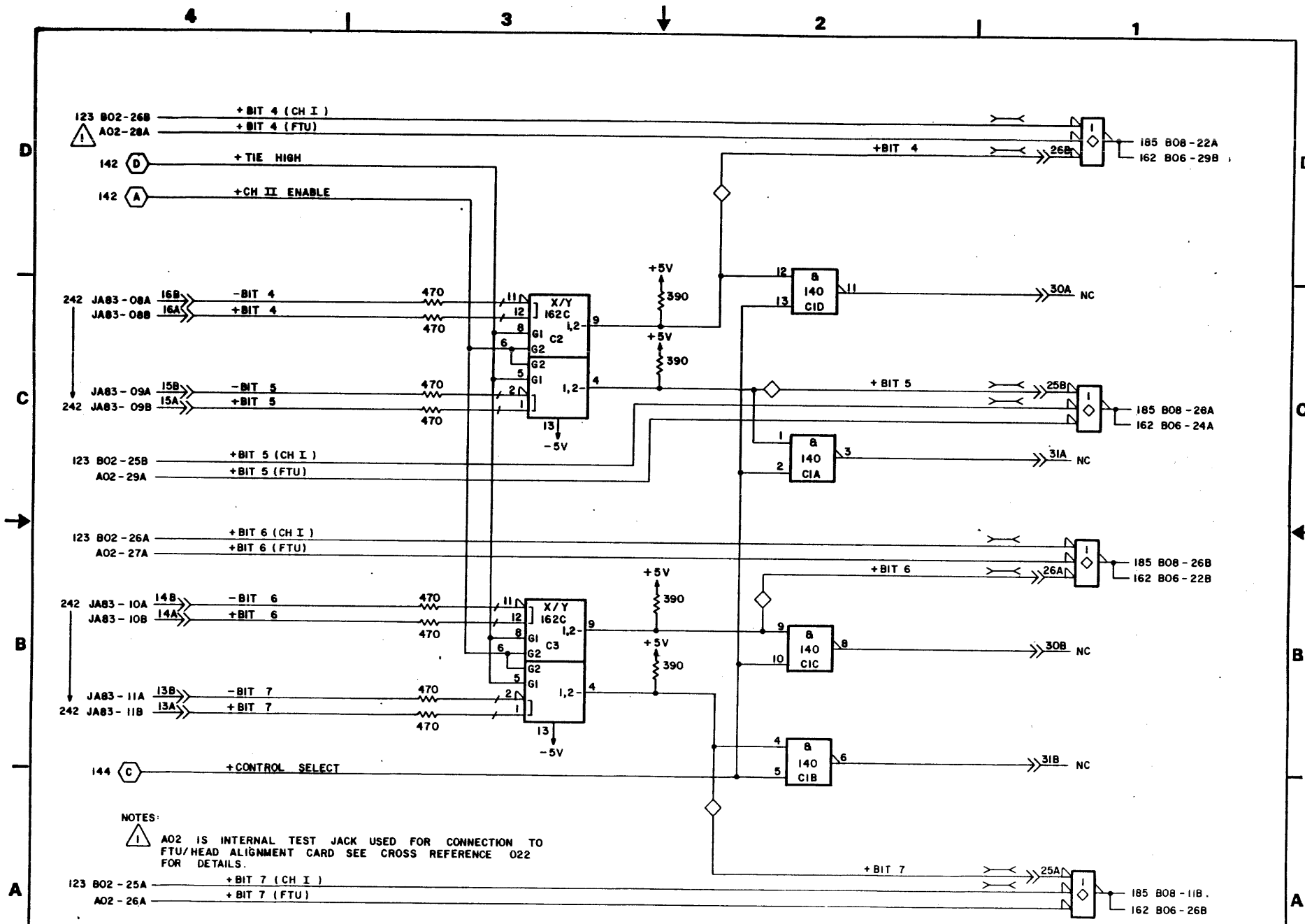

NOTES:

1. A02 IS INTERNAL TEST JACK USED FOR CONNECTION TO FTU/HEAD ALIGNMENT CARD SEE CROSS REFERENCE 022 FOR DETAILS.

CONTROL DATA CORPORATION NORMANDALE DIVISION	CHANNEL II RECEIVERS (50 PIN I/O, 9762) LOC A2804	CODE IDENT 19333	C	83322240	A	B	
		CROSS REF NO 143		SHEET 3	PAGE 1-95		

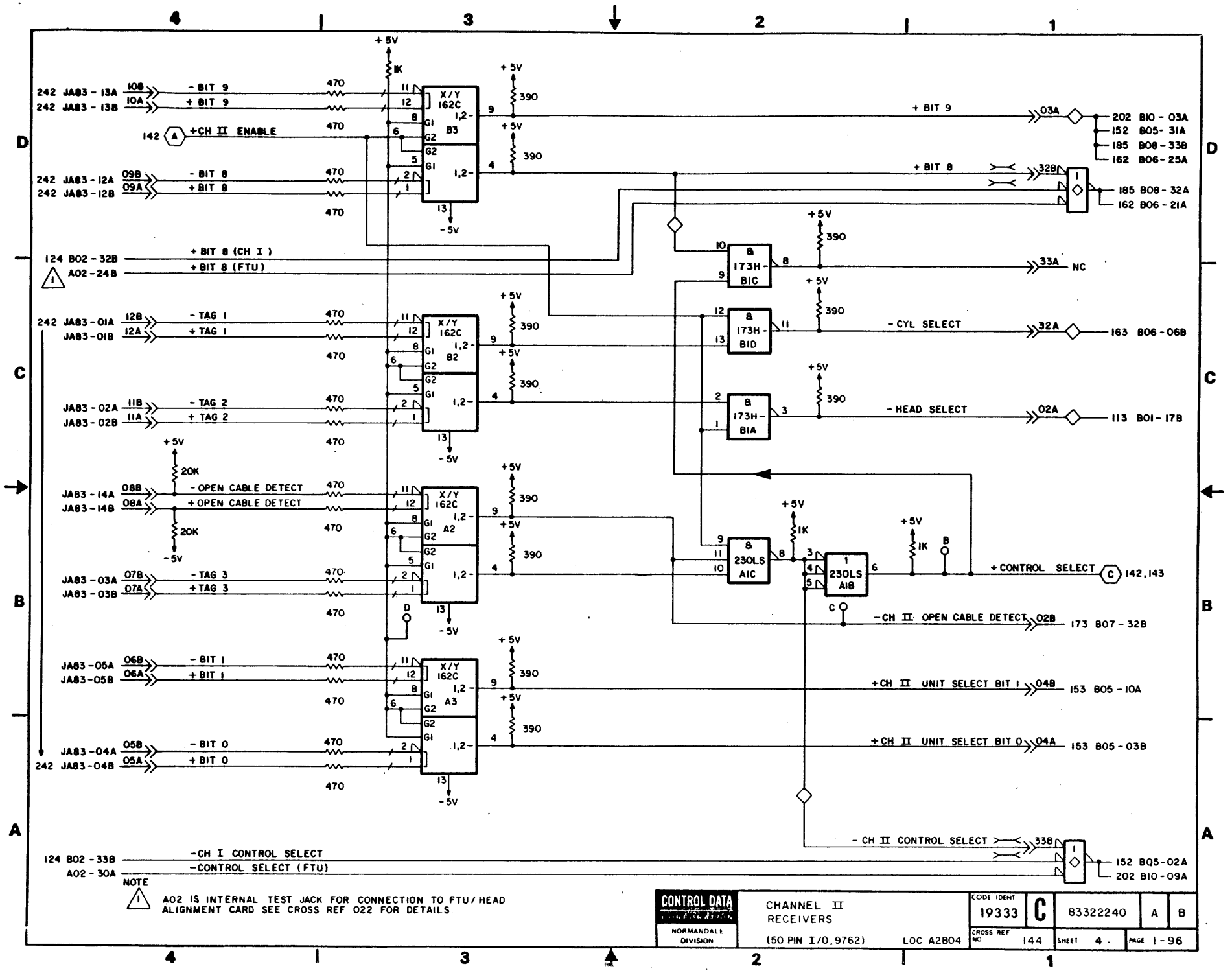
+5V
1K
X/Y 162C
B3
B2
A2
A3
390
470
20K
242 JA83-13A
242 JA83-13B
- BIT 9
+ BIT 9
242 JA83-12A
242 JA83-12B
- BIT 8
+ BIT 8
142 +CH II ENABLE
124 B02-32B
A02-24B
+ BIT 8 (CH I)
+ BIT 8 (FTU)
242 JA83-01A
JA83-01B
- TAG 1
+ TAG 1
JA83-02A
JA83-02B
- TAG 2
+ TAG 2
JA83-14A
JA83-14B
- OPEN CABLE DETECT
+ OPEN CABLE DETECT
JA83-03A
JA83-03B
- TAG 3
+ TAG 3
JA83-05A
JA83-05B
- BIT 1
+ BIT 1
JA83-04A
242 JA83-04B
- BIT 0
+ BIT 0
8 173H-B1C
8 173H-B1D
8 173H-B1A
8 230LS A1C
1 230LS A1B
+ BIT 9
+ BIT 8
- CYL SELECT
- HEAD SELECT
+ CONTROL SELECT
-CH II OPEN CABLE DETECT
+CH II UNIT SELECT BIT 1
+CH II UNIT SELECT BIT 0
- CH II CONTROL SELECT
124 B02-33B
A02-30A
-CH I CONTROL SELECT
-CONTROL SELECT (FTU)
202 B10-03A
152 B05-31A
185 B08-33B
162 B06-25A
185 B08-32A
162 B06-21A
33A NC
163 B06-06B
113 B01-17B
173 B07-32B
153 B05-10A
153 B05-03B
152 B05-02A
202 B10-09A
142,143
NOTE
A02 IS INTERNAL TEST JACK FOR CONNECTION TO FTU/HEAD ALIGNMENT CARD SEE CROSS REF 022 FOR DETAILS.
CONTROL DATA
NORMANDALE DIVISION
CHANNEL II RECEIVERS
(50 PIN I/O, 9762)
LOC A2B04
CODE IDENT 19333
C
83322240
A
B
CROSS REF NO 144
SHEET 4.
PAGE 1-96

REVISION STATUS OF SHEETS

1	2	3	4	5	6	7	8	9	10	11	12	13	14	15	16	17	18	19	20
A	A	A	A																
B	A	A	B																
C	C	C	C																
D	C	C	D																
E	E	E	E																
F	E	E	F																
G	G	E	F																

REVISIONS

REV.	ECO.	DESCRIPTION	DRFT	DATE	CHK'D
A	PE23000	RELEASED	GR		
B	PE48296	CORRECT DIAGRAMS	SB	11-2-76	
C	PE48402	CORRECT DIAGRAMS	GR	12 17 76	
D	PE48560	W/W CHANGE	GR	5 10 77	
E	PE48437	CHG AKHV TO BKHV	GR	5 10 77	
F	PE48568	CORR ERR	DM	725 77	
G	PE48716	CHG BKHV TO EKHV CARD	MA	10-2077	

UNUSED LOGIC ELEMENTS

ELEMENT TYPE	LOCATION	OUTPUT PIN(S)
905	B1A	3
201	C2	6,8
201	D3A	3
146	E2F	12

MAINTANCE SWITCHES AND STATUS INDICATORS ON CARD EDGE

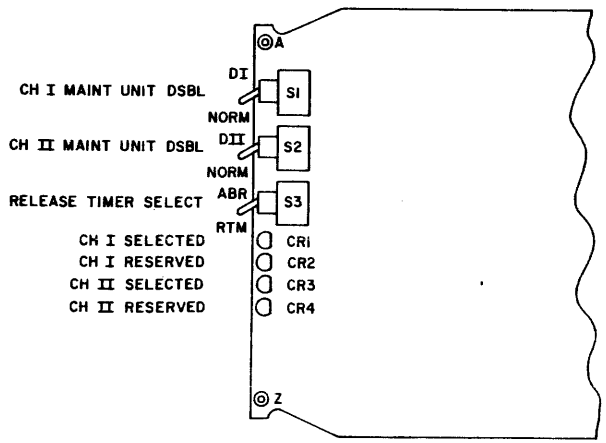

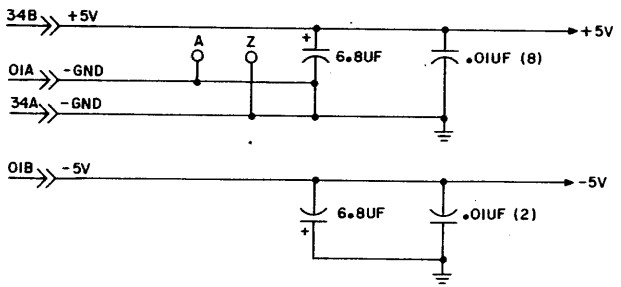

NOTE

1. ON SINGLE CHANNEL UNITS B05 IS A JUMPER PLUG

152 B05 - 14A → 154 B05 - 33A
153 B05 - 16A → 153 B05 - 16B
153 B05 - 21A → 153 B05 - 22A
154 B05 - 06A → 154 B05 - 06B
154 B05 - 07A → 151 B05 - 01A

THIS SET USED ON EKHV REV A (60 PIN I/O)

DRAWN	G RABINE	9-27-76
CHECKED		
ENGINEER		
APPROVED		

CONTROL DATA CORPORATION
NORMANDALE DIVISION

DUAL CHANNEL STEERING DIAGRAMS
TYPE EKHV LOC A2B05

CODE IDENT				
19333	C	83322240	Z	G

CROSS REF NO. 151 | SHEET 1 OF 4 | PAGE 1-96.1

REF 83214815

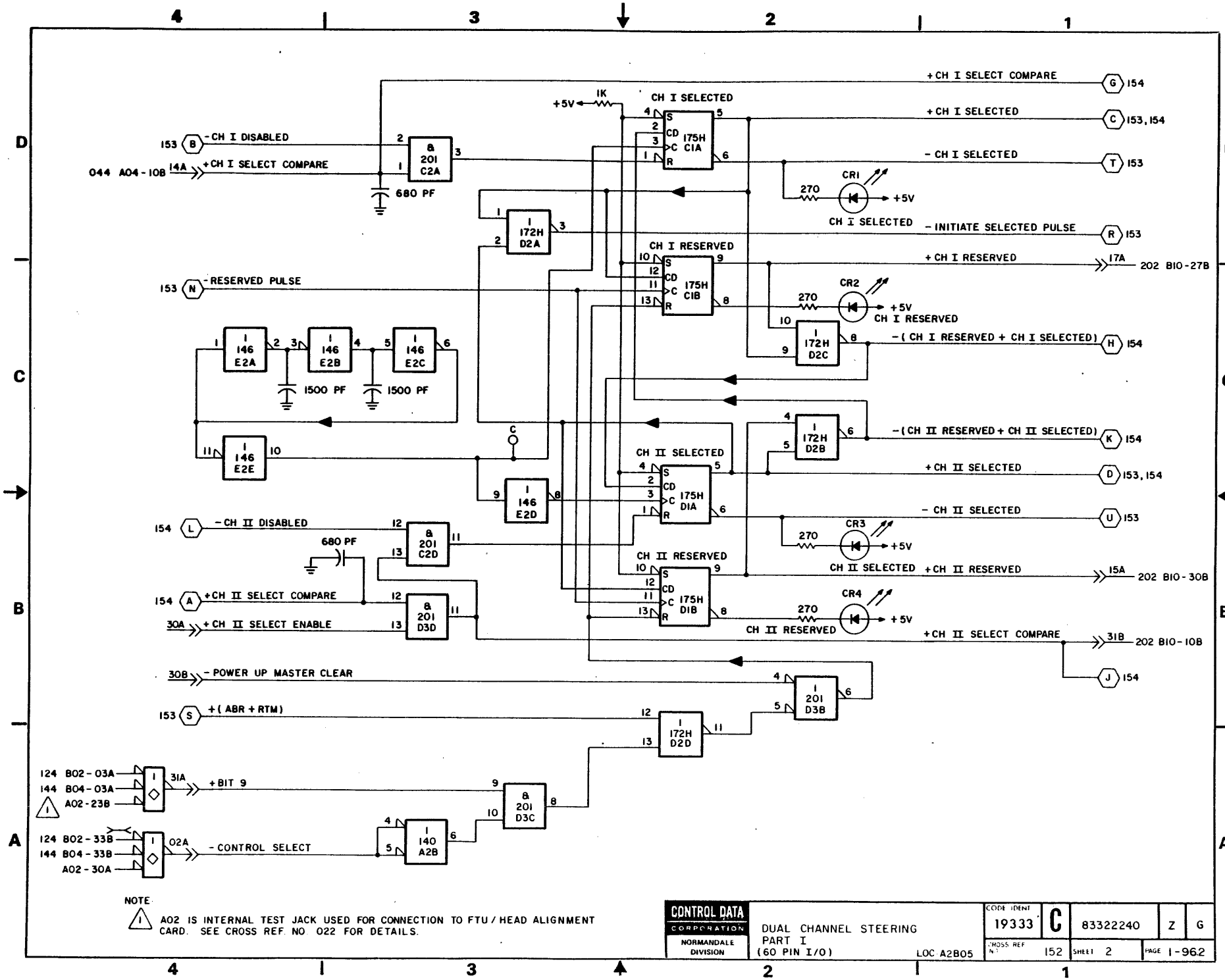

NOTE

1 A02 IS INTERNAL TEST JACK USED FOR CONNECTION TO FTU / HEAD ALIGNMENT CARD. SEE CROSS REF. NO. 022 FOR DETAILS.

CONTROL DATA CORPORATION
NORMANDALE DIVISION

DUAL CHANNEL STEERING
PART I
(60 PIN I/O)
LOC A2B05

CODE IDENT				
19333	C	83322240	Z	G
CROSS REF NO. 152	SHEET 2	PAGE 1-96.2		

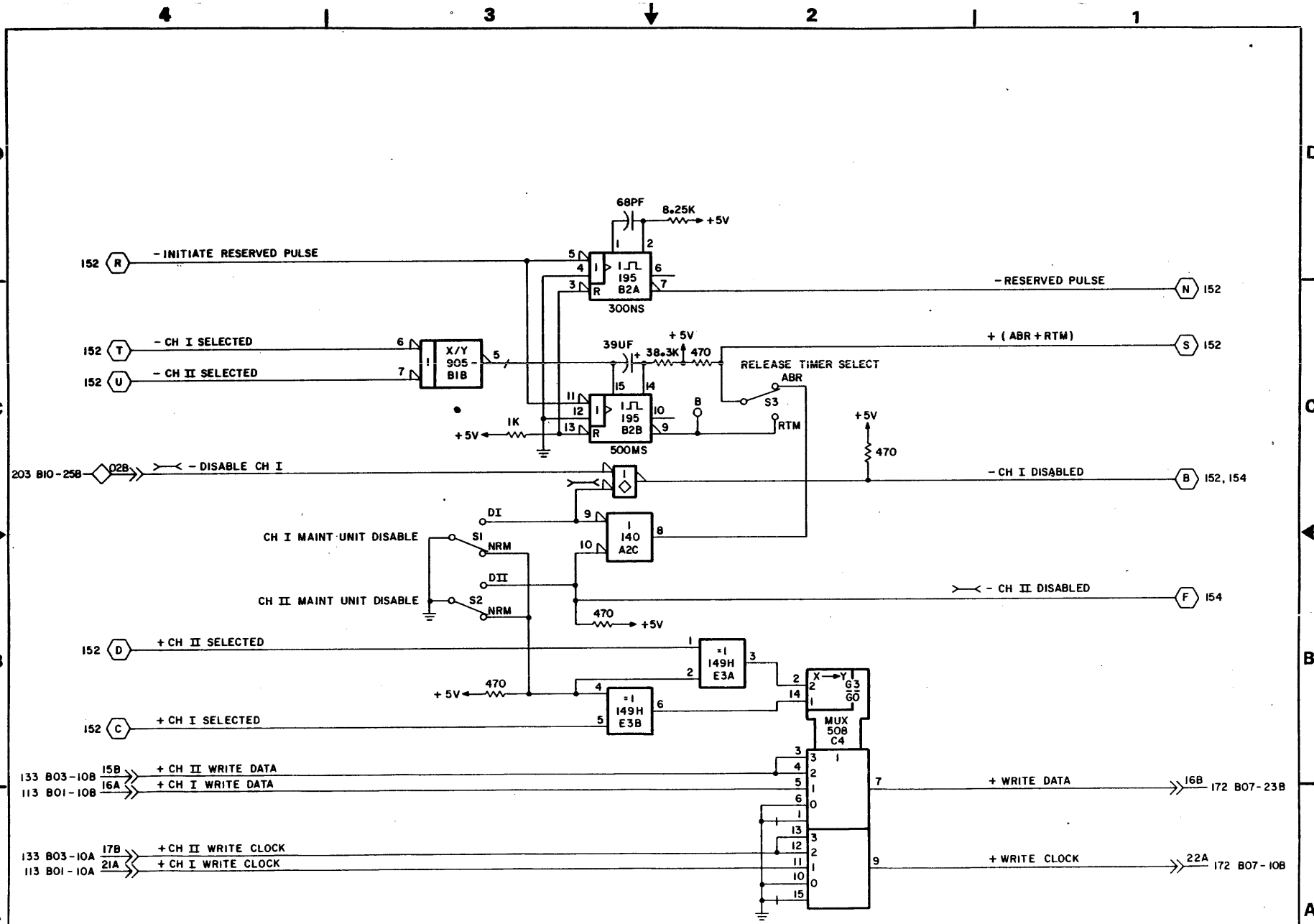

CONTROL DATA CORPORATION NORMANDALE DIVISION	DUAL CHANNEL STEERING PART 2 (60 PIN I/O) LOC A2B05	CODE IDENT 19333	C	83322240	Z	E
		CROSS REF NO. 153	SHEET 3	PAGE 1-96.3		

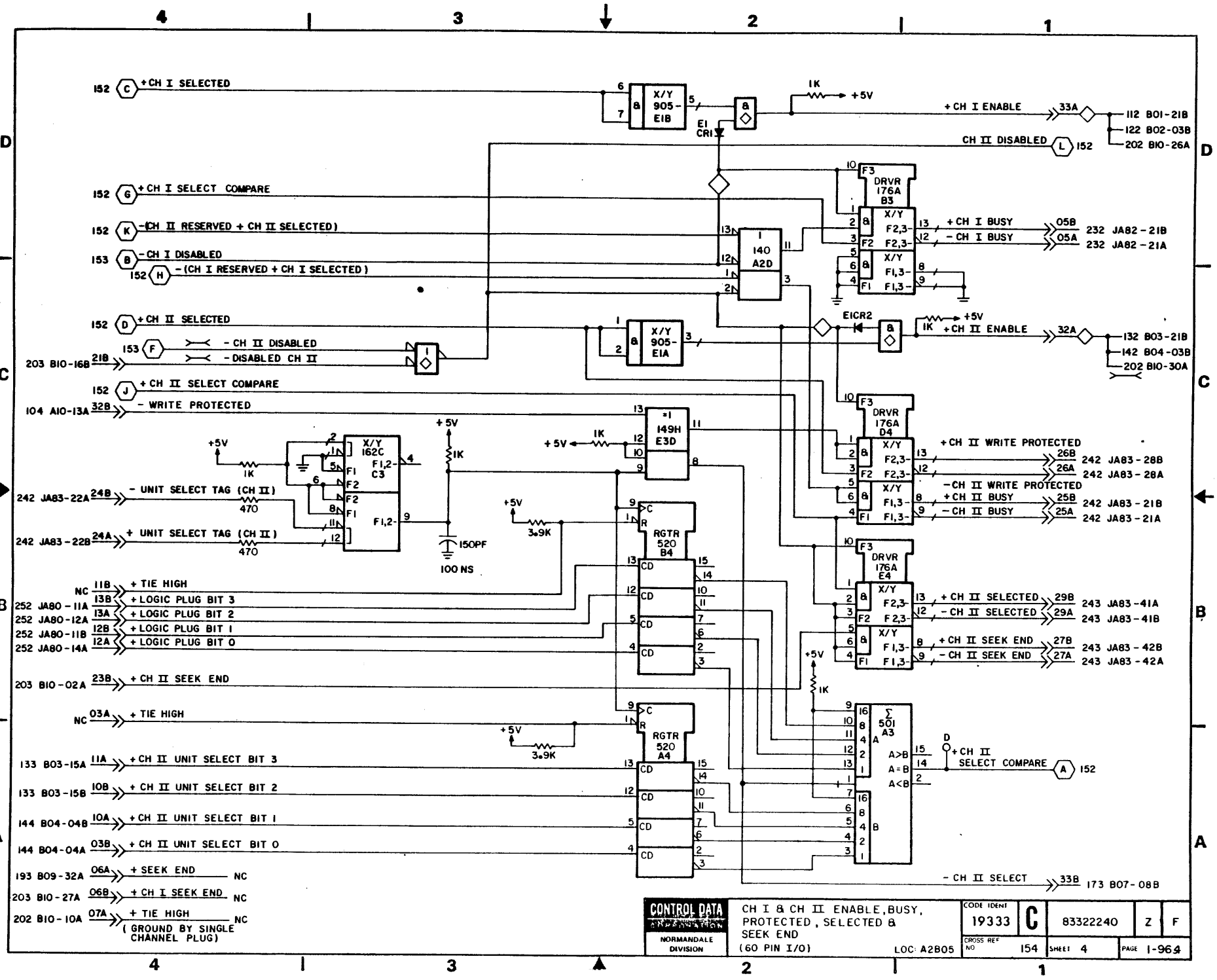
152 C +CH I SELECTED
X/Y 905-E1B
E1 CR1
1K +5V
+CH I ENABLE 33A
112 B01-21B
122 B02-03B
202 B10-26A
CH II DISABLED L 152
152 G +CH I SELECT COMPARE
152 K -(CH II RESERVED + CH II SELECTED)
153 B -CH I DISABLED
152 H -(CH I RESERVED + CH I SELECTED)
I 140 A2D
F3 DRVR 176A B3
+CH I BUSY 05B 232 JA82-21B
-CH I BUSY 05A 232 JA82-21A
152 D +CH II SELECTED
153 F -CH II DISABLED
-DISABLED CH II
203 B10-16B 21B
E1CR2
+CH II ENABLE 32A
132 B03-21B
142 B04-03B
202 B10-30A
152 J +CH II SELECT COMPARE
104 A10-13A 32B -WRITE PROTECTED
149H E3D
F3 DRVR 176A D4
+CH II WRITE PROTECTED 26B 242 JA83-28B
26A 242 JA83-28A
-CH II WRITE PROTECTED
+CH II BUSY 25B 242 JA83-21B
-CH II BUSY 25A 242 JA83-21A
X/Y 162C F1,2-C3
242 JA83-22A 24B -UNIT SELECT TAG (CH II)
242 JA83-22B 24A +UNIT SELECT TAG (CH II)
470
150PF
100 NS
3.9K
RGTR 520 B4
NC 11B +TIE HIGH
252 JA80-11A 13B +LOGIC PLUG BIT 3
252 JA80-12A 13A +LOGIC PLUG BIT 2
252 JA80-11B 12B +LOGIC PLUG BIT 1
252 JA80-14A 12A +LOGIC PLUG BIT 0
F3 DRVR 176A E4
+CH II SELECTED 29B 243 JA83-41A
-CH II SELECTED 29A 243 JA83-41B
+CH II SEEK END 27B 243 JA83-42B
-CH II SEEK END 27A 243 JA83-42A
203 B10-02A 23B +CH II SEEK END
NC 03A +TIE HIGH
RGTR 520 A4
Σ 501 A3
A>B
A=B
A<B
D +CH II SELECT COMPARE A 152
133 B03-15A 11A +CH II UNIT SELECT BIT 3
133 B03-15B 10B +CH II UNIT SELECT BIT 2
144 B04-04B 10A +CH II UNIT SELECT BIT 1
144 B04-04A 03B +CH II UNIT SELECT BIT 0
193 B09-32A 06A +SEEK END NC
203 B10-27A 06B +CH I SEEK END NC
202 B10-10A 07A +TIE HIGH NC
(GROUND BY SINGLE CHANNEL PLUG)
-CH II SELECT 33B 173 B07-08B
CONTROL DATA CORPORATION
NORMANDALE DIVISION
CH I & CH II ENABLE, BUSY, PROTECTED, SELECTED & SEEK END
(60 PIN I/O)
LOC: A2B05
CODE IDENT 19333
C
83322240
Z
F
CROSS REF NO 154
SHEET 4
PAGE 1-964

REVISION STATUS OF SHEETS

1	2	3	4	5	6	7	8	9	10	11	12	13	14	15	16	17	18	19	20
A	A	A	A																
B	A	A	B																
C	C	C	C																
D	D	D	D																
E	E	E	E																
F	E	E	F																
G	G	E	F																
H	H	H	F																
J	J	H	F																
K	K	K	K																

REVISIONS

REV.	ECO.	DESCRIPTION	DRFT	DATE	CHK'D
A	PE23000	RELEASED	GR	- 7 76	
B	PE48296	ERR CORR	MA	8/19/76	
C	PE48402	ERROR CORRECTIONS	VB	1-6-77	
D	PE48437	CARD CHANGE AKHV TO BHKV	SB	2-24-77	
E	PE48560	ADD GROUND TO INPUT PIN	SB	4-22-77	
F	PE48568	ENABLE / DISABLE ERROR CORRECTION	SB	4-26-77	
G	PE48716	BKHV TO EKHV	MA	5-8-78	
H	PE55608	EKHV M.V. CHANGE	MA	2-8-79	
J	PE57278	ADD WIRE INFO TO LOGIC	CB	2-15-80	
K	PE60242	CHG IC'S ON EKHV AY	MJ	5-26-83	

UNUSED LOGIC ELEMENTS

ELEMENT TYPE	LOCATION	OUTPUT PIN(S)
201	C2	8
201	D3A	3

MAINTANCE SWITCHES AND STATUS INDICATORS ON CARD EDGE

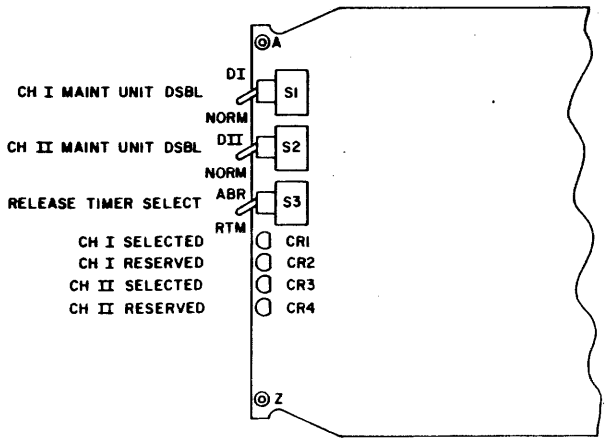

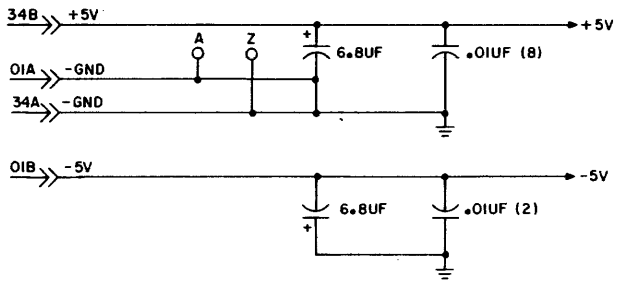

NOTE

1. ON SINGLE CHANNEL UNITS B05 IS A JUMPER PLUG
   - 152 B05 - 14A → 154 B05 - 33A
   - 153 B05 - 16A → 153 B05 - 16B
   - 153 B05 - 21A → 153 B05 - 22A
   - 154 B05 - 06A → 154 B05 - 06B
   - 154 B05 - 07A → 151 B05 - 01A

THIS SET USED ON EKHV REV B & ABOVE (60 PIN I/O)

DRAWN G RABINE 8-22-X	CONTROL DATA CORPORATION NORMANDALE DIVISION	DUAL CHANNEL STEERING DIAGRAMS	CODE IDENT 19333	C	DWG NO 83322240	CC Z	REV K
		TYPE EKHV LOC A2B05	ASSY NO 151		SHEET 1 OF 4	PAGE 1-97	

REF 83214815

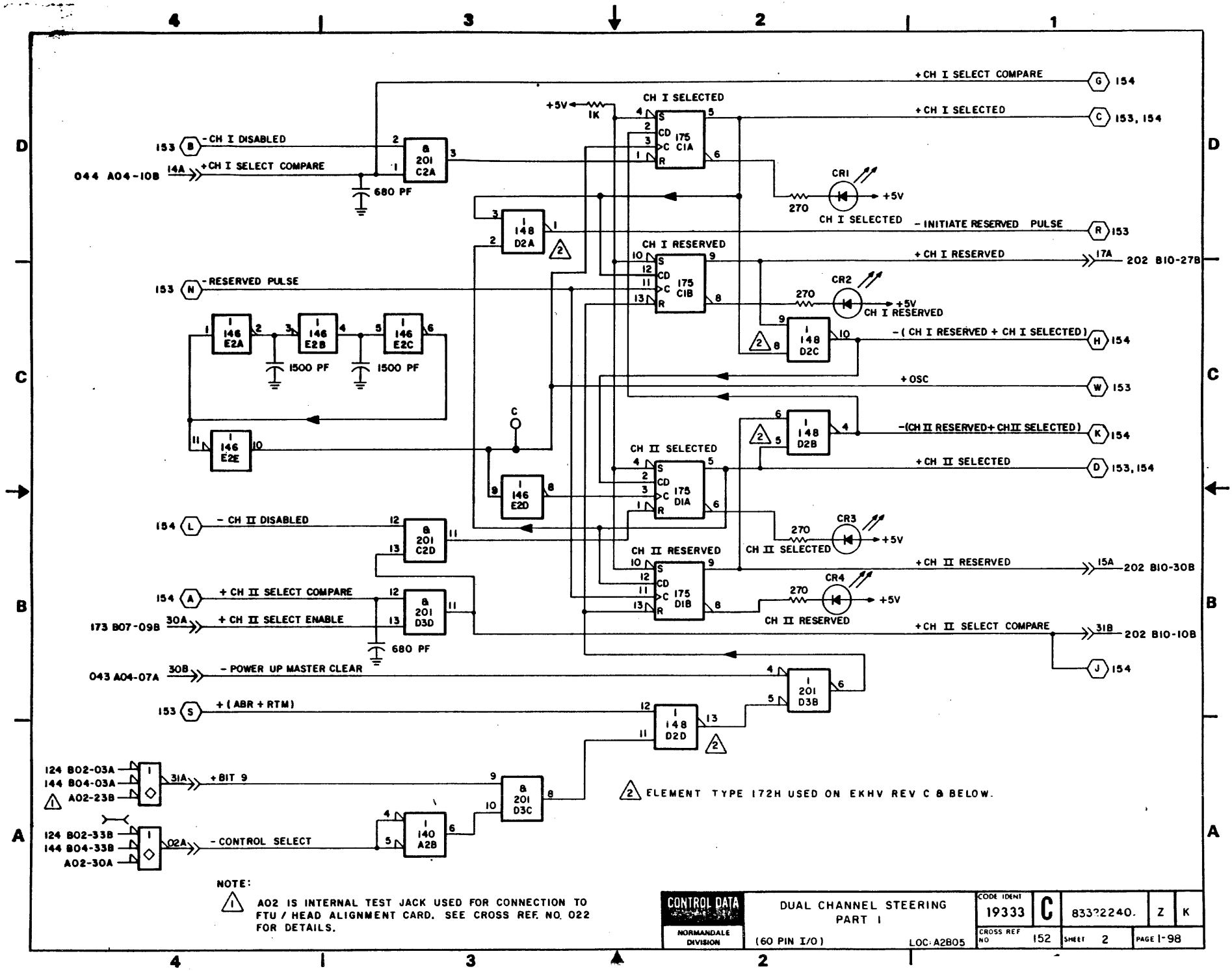
+CH I SELECT COMPARE
G 154
+5V
1K
CH I SELECTED
+CH I SELECTED
C 153, 154
153 B -CH I DISABLED
044 A04-10B 14A +CH I SELECT COMPARE
8 201 C2A
680 PF
CR1
270
+5V
CH I SELECTED
-INITIATE RESERVED PULSE
R 153
CH I RESERVED
+CH I RESERVED
17A 202 B10-27B
153 N -RESERVED PULSE
CR2
270
+5V
CH I RESERVED
1 146 E2A
1 146 E2B
1 146 E2C
1500 PF
1500 PF
1 148 D2C
-(CH I RESERVED + CH I SELECTED)
H 154
+OSC
W 153
1 146 E2E
1 148 D2B
-(CH II RESERVED+ CHII SELECTED)
K 154
CH II SELECTED
+CH II SELECTED
D 153, 154
1 146 E2D
154 L - CH II DISABLED
8 201 C2D
CR3
270
+5V
CH II SELECTED
CH II RESERVED
+CH II RESERVED
15A 202 B10-30B
154 A +CH II SELECT COMPARE
173 B07-09B 30A +CH II SELECT ENABLE
8 201 D3D
680 PF
+CH II SELECT COMPARE
31B 202 B10-10B
J 154
043 A04-07A 30B - POWER UP MASTER CLEAR
1 201 D3B
153 S +(ABR + RTM)
1 148 D2D
124 B02-03A
144 B04-03A
A02-23B
31A +BIT 9
8 201 D3C
124 B02-33B
144 B04-33B
A02-30A
02A - CONTROL SELECT
1 140 A2B
ELEMENT TYPE 172H USED ON EKHV REV C & BELOW.
NOTE:
A02 IS INTERNAL TEST JACK USED FOR CONNECTION TO FTU / HEAD ALIGNMENT CARD. SEE CROSS REF. NO. 022 FOR DETAILS.
CONTROL DATA
NORMANDALE DIVISION
DUAL CHANNEL STEERING
PART 1
(60 PIN I/O)
LOC: A2B05
CODE IDENT 19333
C
83372240.
Z
K
CROSS REF NO 152
SHEET 2
PAGE 1-98

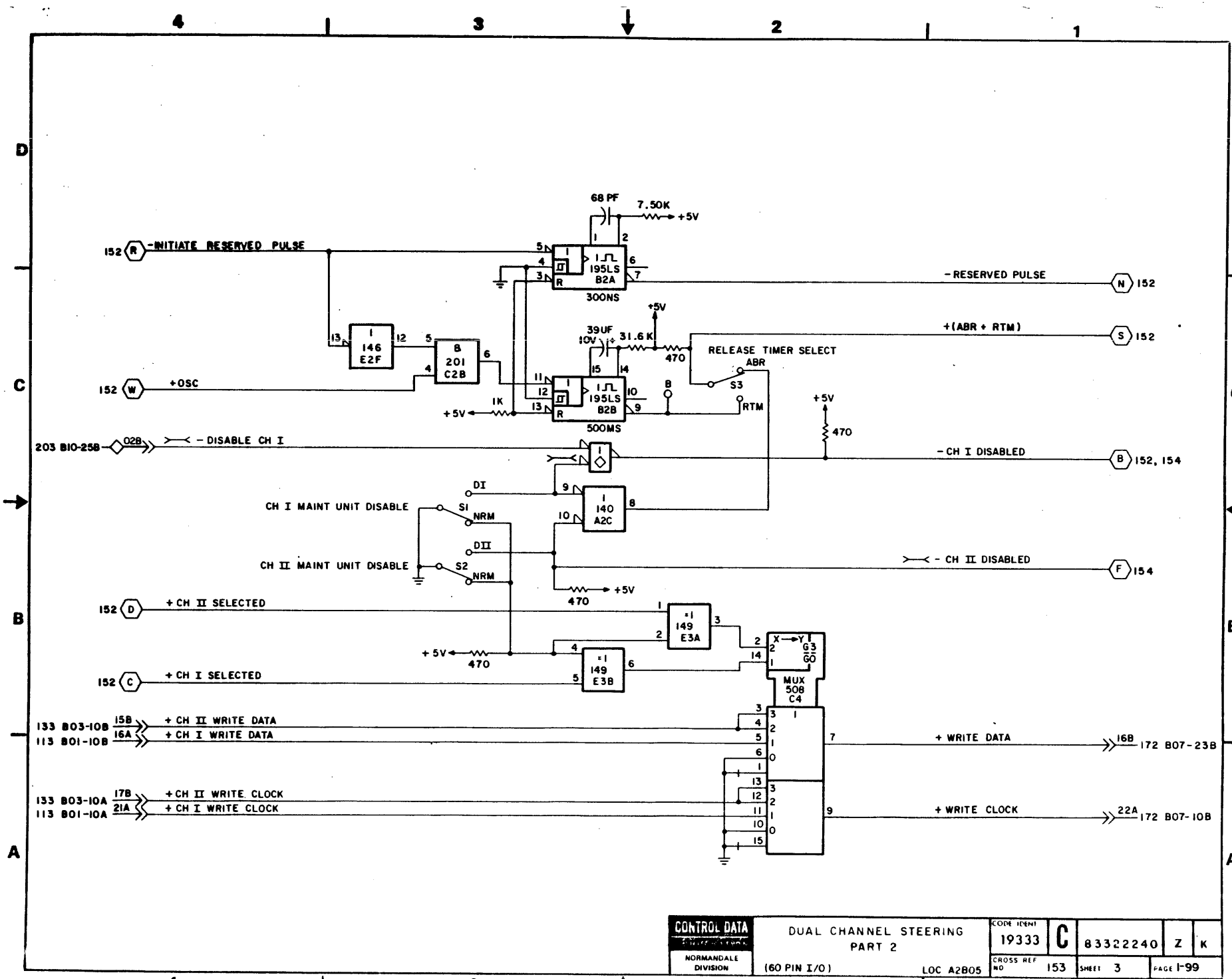

CONTROL DATA
NORMANDALE DIVISION

DUAL CHANNEL STEERING
PART 2
(60 PIN I/O) LOC A2B05

CODE IDENT				
19333	C	83322240	Z	K
CROSS REF NO 153	SHEET 3	PAGE 1-99		

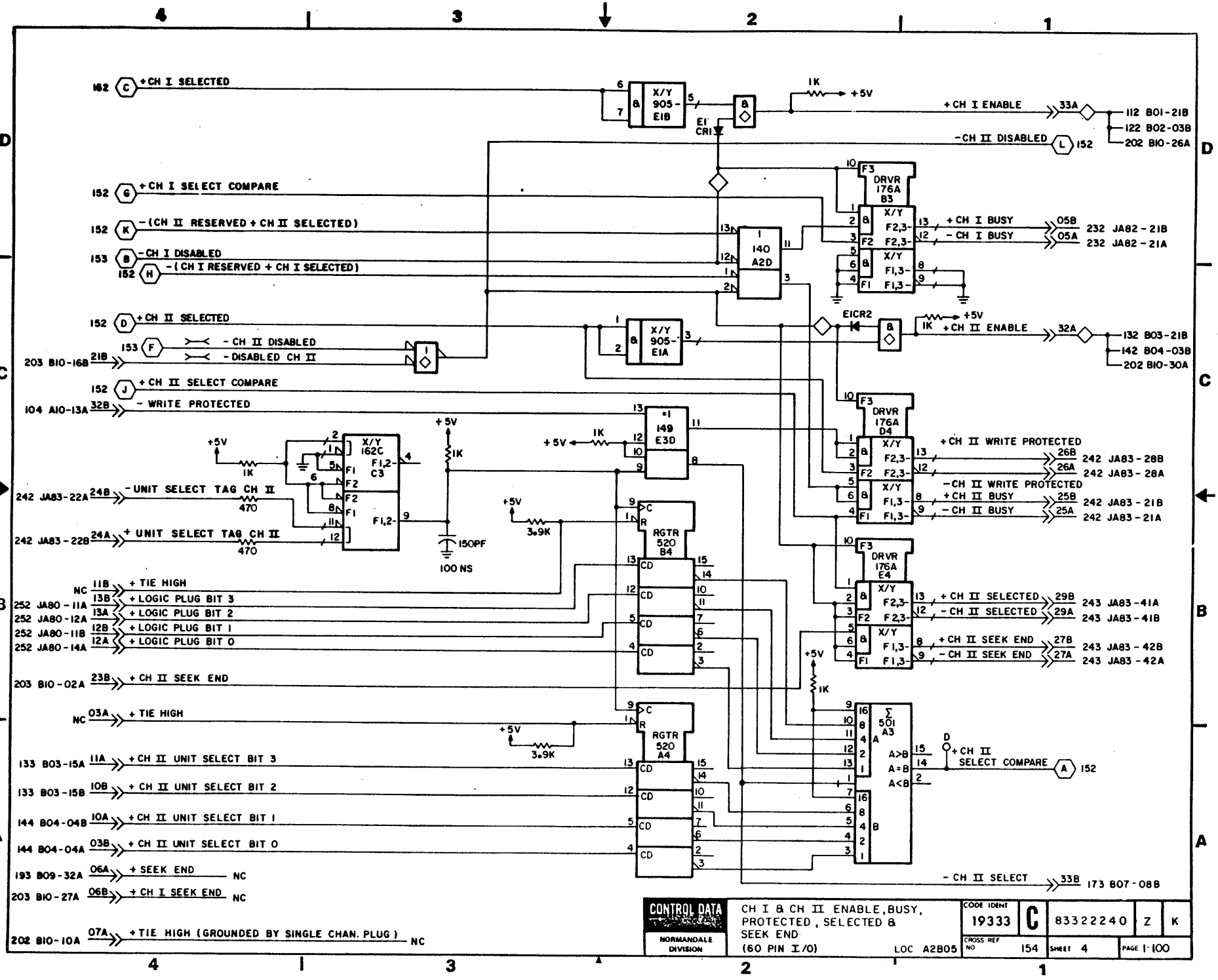
+CH I SELECTED
X/Y 905-E1B
E1 CR1
1K
+5V
+CH I ENABLE
33A
112 B01-21B
122 B02-03B
202 B10-26A
-CH II DISABLED
152
+CH I SELECT COMPARE
-(CH II RESERVED + CH II SELECTED)
-CH I DISABLED
-(CH I RESERVED + CH I SELECTED)
140 A2D
DRVR 176A B3
+CH I BUSY
-CH I BUSY
05B
05A
232 JA82-21B
232 JA82-21A
+CH II SELECTED
-CH II DISABLED
-DISABLED CH II
203 B10-16B
E1CR2
+CH II ENABLE
32A
132 B03-21B
142 B04-03B
202 B10-30A
+CH II SELECT COMPARE
-WRITE PROTECTED
104 A10-13A
149 E3D
DRVR 176A D4
+CH II WRITE PROTECTED
-CH II WRITE PROTECTED
26B
26A
25B
25A
242 JA83-28B
242 JA83-28A
242 JA83-21B
242 JA83-21A
X/Y 162C C3
-UNIT SELECT TAG CH II
+UNIT SELECT TAG CH II
242 JA83-22A
242 JA83-22B
470
150PF
100 NS
3.9K
RGTR 520 B4
RGTR 520 A4
+TIE HIGH
+LOGIC PLUG BIT 3
+LOGIC PLUG BIT 2
+LOGIC PLUG BIT 1
+LOGIC PLUG BIT 0
252 JA80-11A
252 JA80-12A
252 JA80-11B
252 JA80-14A
DRVR 176A E4
+CH II SELECTED
-CH II SELECTED
+CH II SEEK END
-CH II SEEK END
29B
29A
27B
27A
243 JA83-41A
243 JA83-41B
243 JA83-42B
243 JA83-42A
203 B10-02A
Σ 501 A3
A>B
A=B
A<B
+CH II SELECT COMPARE
+CH II UNIT SELECT BIT 3
+CH II UNIT SELECT BIT 2
+CH II UNIT SELECT BIT 1
+CH II UNIT SELECT BIT 0
133 B03-15A
133 B03-15B
144 B04-04B
144 B04-04A
+SEEK END
+CH I SEEK END
193 B09-32A
203 B10-27A
+TIE HIGH (GROUNDED BY SINGLE CHAN. PLUG)
202 B10-10A
-CH II SELECT
33B
173 B07-08B
NC
CONTROL DATA
NORMANDALE DIVISION
CH I & CH II ENABLE, BUSY, PROTECTED, SELECTED & SEEK END
(60 PIN I/O)
LOC A2B05
CODE IDENT 19333
C
83322240
Z
K
CROSS REF NO 154
SHEET 4
PAGE 1-100

REVISION STATUS OF SHEETS

1	2	3	4	5	6	7	8	9	10	11	12	13	14	15	16	17	18	19	20
A	A	A	A																
B	B	B	B																
C	B	B	C																
D	D	D	D																
E	D	D	E																
F	F	D	E																

REVISIONS

REV.	ECO.	DESCRIPTION	DRFT.	DATE	CHK'D
A	PE23000	RELEASED	GR		
B	PE48402	CORR DIA			
C	PE48560	W/W CHG	GR	5 10 77	
D	PE48437	CHANGE AKHV TO BKHV	GR	5 10 77	
E	PE48568	CORR. DIAG.	DM	7-25-77	
F	PE48716	CHG BKHV TO EKHV	MA	10-20-77	

UNUSED LOGIC ELEMENTS

ELEMENT TYPE	LOCATION	OUTPUT PIN(S)
905	B1A	3
201	C2	6,8
201	D3A	3
146	E2F	12

MAINTANCE SWITCHES AND STATUS INDICATORS ON CARD EDGE

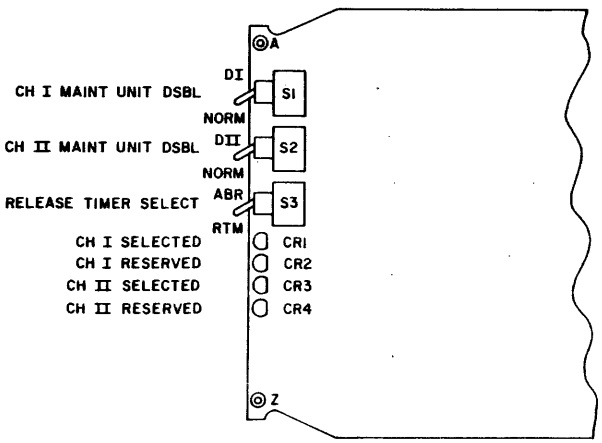

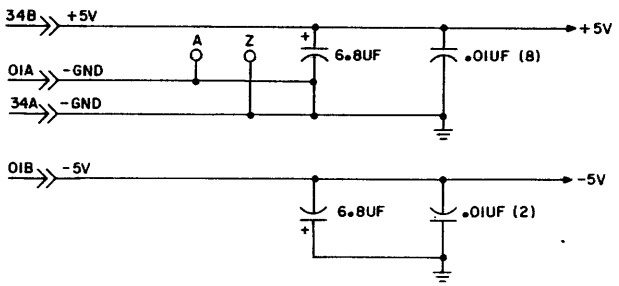

NOTE:

1. ON SINGLE CHANNEL UNITS B05 IS A JUMPER PLUG

152 B05 - 14A ⟶ 154 B05 - 33A
153 B05 - 16A ⟶ 153 B05 - 16B
153 B05 - 21A ⟶ 153 B05 - 22A
154 B05 - 06A ⟶ 154 B05 - 06B
154 B05 - 07A ⟶ 151 B05 - 01A

THIS SET USED ON EKHV REV A (50 PIN I/O)

DRAWN	[illegible]	CONTROL DATA CORPORATION NORMANDALE DIVISION	DUAL CHANNEL STEERING DIAGRAMS	CODE IDENT 19333	C	83322240	Z F
CHECKED							
ENGINEER							
APPROVED			TYPE: EKHV LOC A2B05	CROSS REF NO 151	SHEET 1 OF 4	PAGE 1-100.1	

REF 83214840

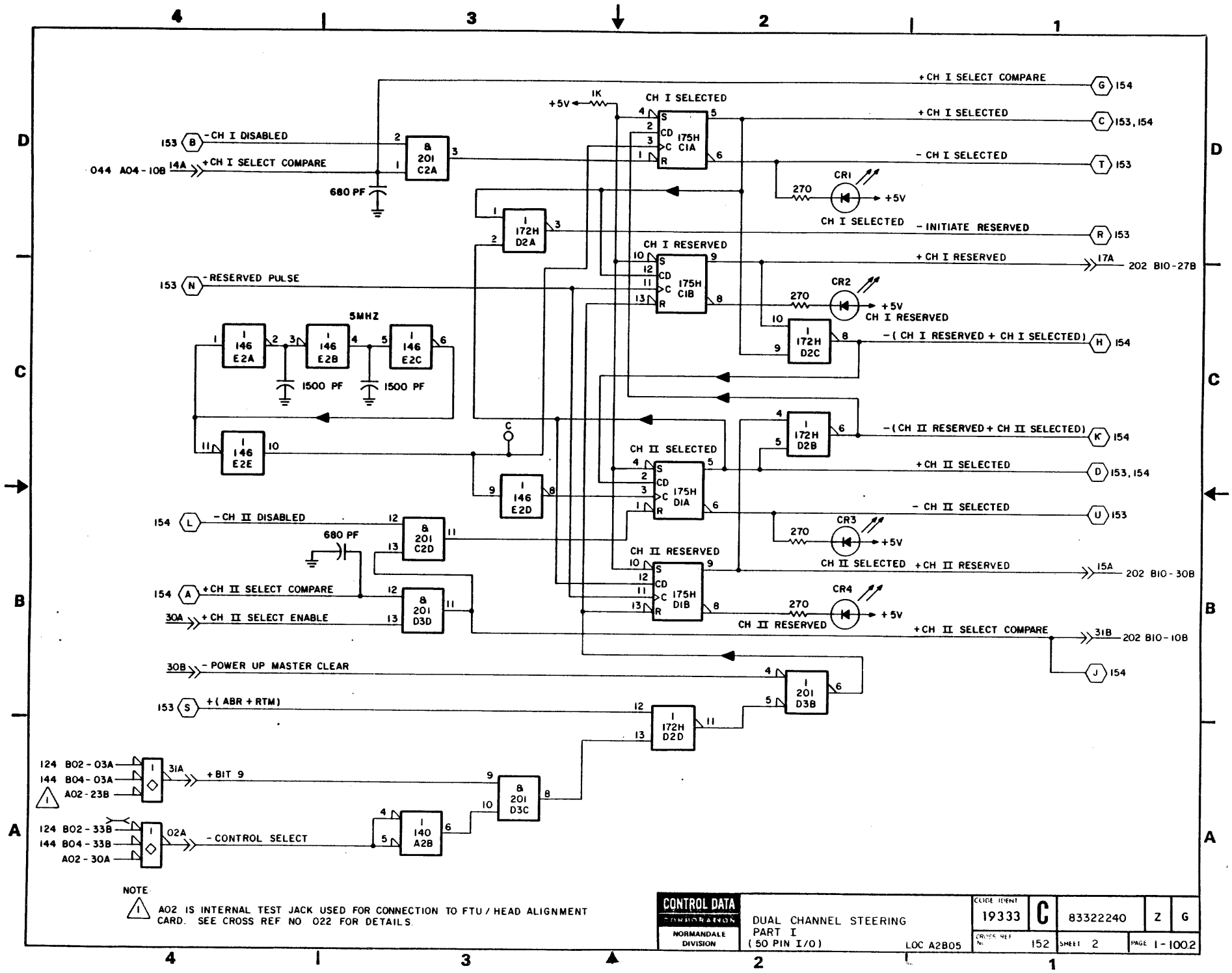
+CH I SELECT COMPARE
G 154
+5V
1K
CH I SELECTED
153 B -CH I DISABLED
044 A04-108 14A +CH I SELECT COMPARE
8 201 C2A
680 PF
175H C1A
+CH I SELECTED
C 153, 154
- CH I SELECTED
T 153
CR1
270
+5V
CH I SELECTED
1 172H D2A
- INITIATE RESERVED
R 153
CH I RESERVED
175H C1B
+CH I RESERVED
17A
202 B10-27B
153 N -RESERVED PULSE
CR2
270
+5V
CH I RESERVED
5MHZ
1 146 E2A
1 146 E2B
1 146 E2C
1500 PF
1500 PF
1 172H D2C
-(CH I RESERVED + CH I SELECTED)
H 154
1 146 E2E
C
1 146 E2D
1 172H D2B
-(CH II RESERVED + CH II SELECTED)
K 154
CH II SELECTED
175H D1A
+CH II SELECTED
D 153, 154
154 L -CH II DISABLED
680 PF
8 201 C2D
- CH II SELECTED
U 153
CR3
270
+5V
CH II SELECTED
CH II RESERVED
175H D1B
+CH II RESERVED
15A
202 B10-30B
154 A +CH II SELECT COMPARE
30A +CH II SELECT ENABLE
8 201 D3D
CR4
270
+5V
CH II RESERVED
+CH II SELECT COMPARE
31B
202 B10-10B
J 154
30B -POWER UP MASTER CLEAR
1 201 D3B
153 S +(ABR + RTM)
1 172H D2D
124 B02-03A
144 B04-03A
A02-23B
31A
+BIT 9
8 201 D3C
124 B02-33B
144 B04-33B
A02-30A
02A
-CONTROL SELECT
1 140 A2B
NOTE
1
A02 IS INTERNAL TEST JACK USED FOR CONNECTION TO FTU / HEAD ALIGNMENT CARD. SEE CROSS REF NO 022 FOR DETAILS.
CONTROL DATA CORPORATION
NORMANDALE DIVISION
DUAL CHANNEL STEERING
PART I
(50 PIN I/O)
LOC A2B05
CODE IDENT 19333
C
83322240
Z
G
CROSS REF NO 152
SHEET 2
PAGE 1-100.2

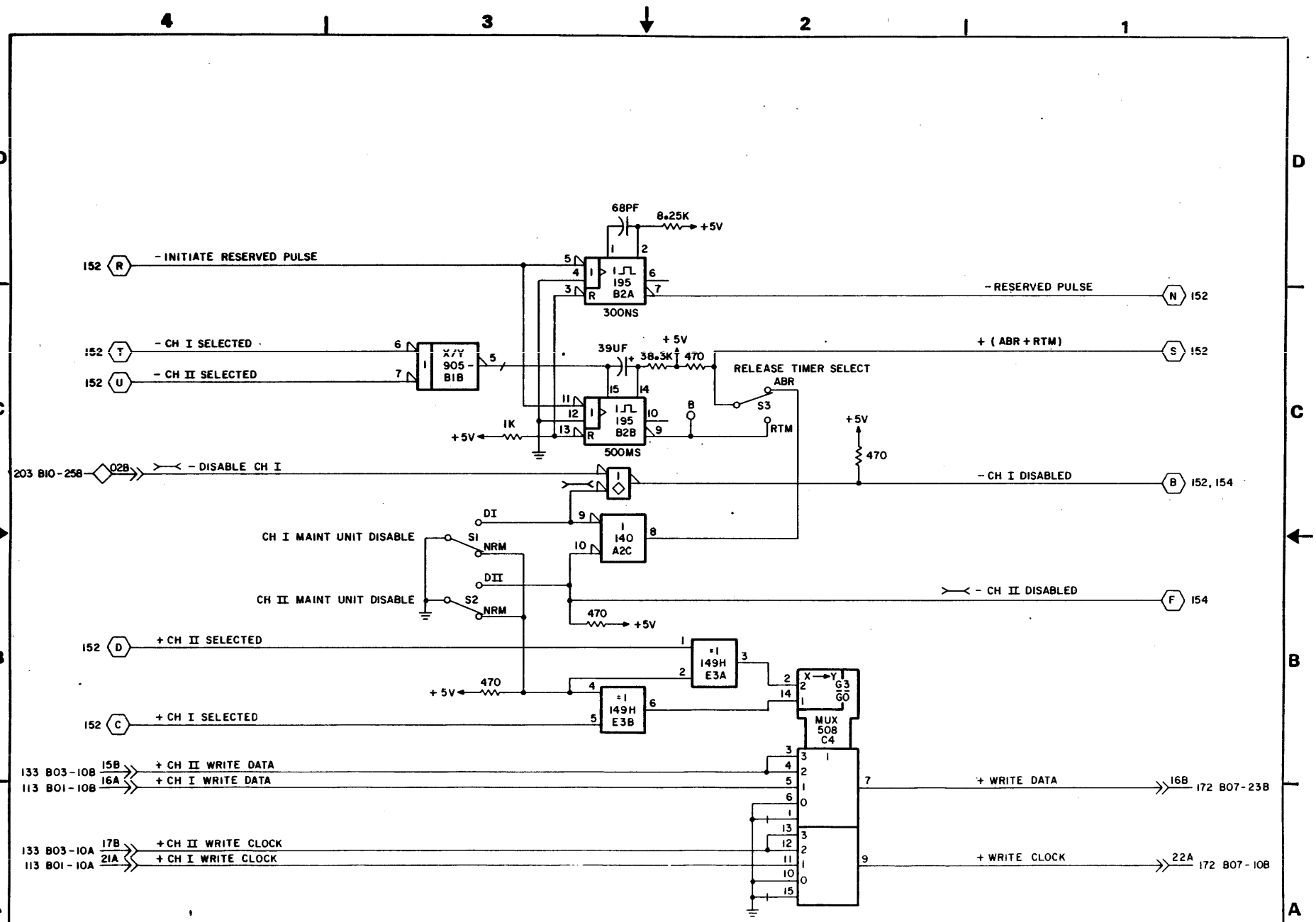

CONTROL DATA CORPORATION NORMANDALE DIVISION	DUAL CHANNEL STEERING PART 2 (50 PIN I/O) LOC A2B05	CODE IDENT 19333	C	83322240	Z	D
		CROSS REF NO. 153	SHEET 3	PAGE 1-100.3		

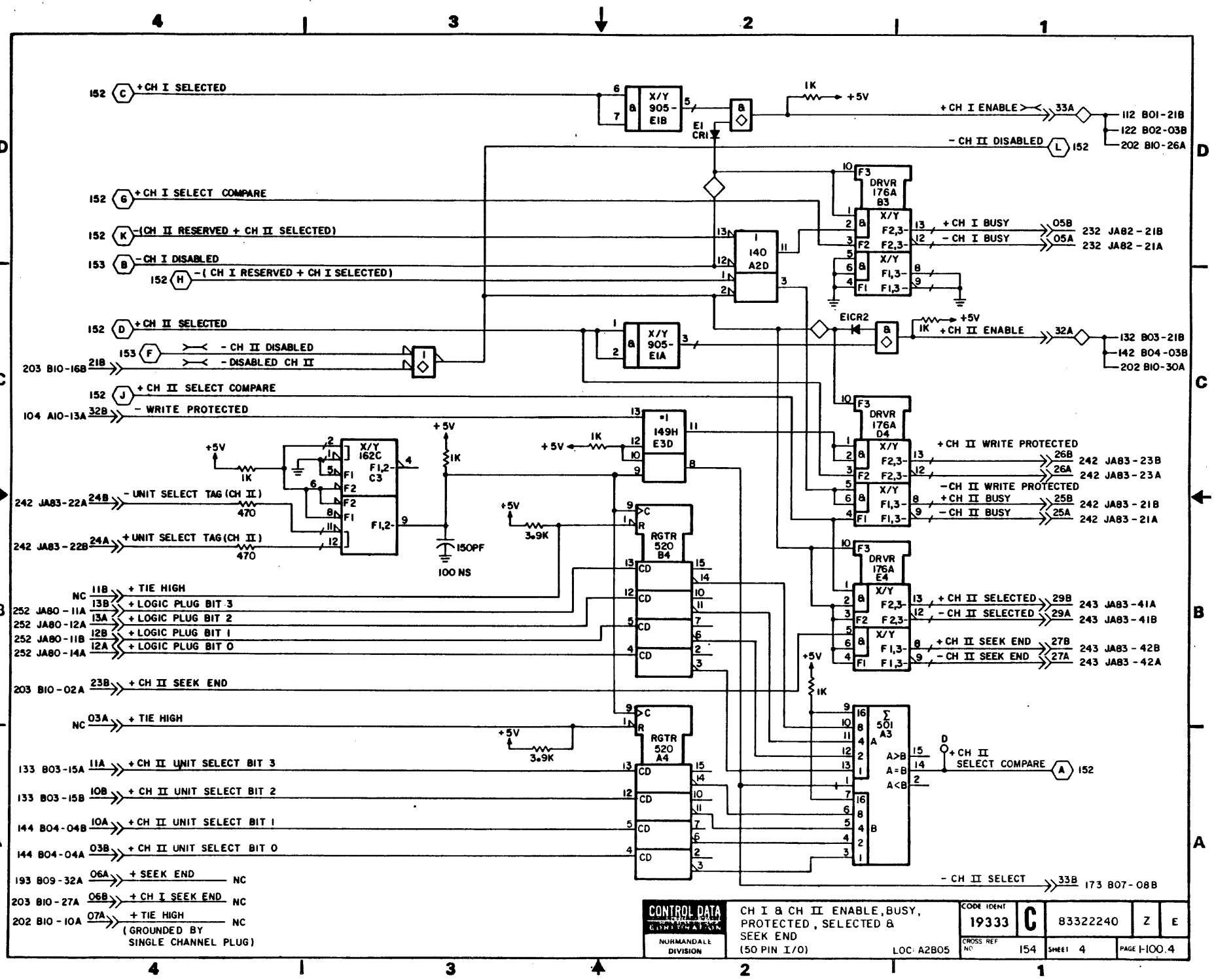

152 C +CH I SELECTED
X/Y 905-E1B
E1 CR1
1K +5V
+CH I ENABLE 33A
112 B01-21B
122 B02-03B
202 B10-26A
-CH II DISABLED L 152
152 G +CH I SELECT COMPARE
152 K -(CH II RESERVED + CH II SELECTED)
153 B -CH I DISABLED
152 H -(CH I RESERVED + CH I SELECTED)
140 A2D
DRVR 176A B3
+CH I BUSY 05B 232 JA82-21B
-CH I BUSY 05A 232 JA82-21A
152 D +CH II SELECTED
153 F -CH II DISABLED
203 B10-16B 21B -DISABLED CH II
X/Y 905-E1A
E1CR2
+CH II ENABLE 32A
132 B03-21B
142 B04-03B
202 B10-30A
152 J +CH II SELECT COMPARE
104 A10-13A 32B -WRITE PROTECTED
149H E3D
DRVR 176A D4
+CH II WRITE PROTECTED 26B 242 JA83-23B
26A 242 JA83-23A
-CH II WRITE PROTECTED
+CH II BUSY 25B 242 JA83-21B
-CH II BUSY 25A 242 JA83-21A
X/Y 162C C3
242 JA83-22A 24B -UNIT SELECT TAG (CH II) 470
242 JA83-22B 24A +UNIT SELECT TAG (CH II) 470
150PF
100 NS
3.9K
RGTR 520 B4
DRVR 176A E4
+CH II SELECTED 29B 243 JA83-41A
-CH II SELECTED 29A 243 JA83-41B
+CH II SEEK END 27B 243 JA83-42B
-CH II SEEK END 27A 243 JA83-42A
NC 11B +TIE HIGH
252 JA80-11A 13B +LOGIC PLUG BIT 3
252 JA80-12A 13A +LOGIC PLUG BIT 2
252 JA80-11B 12B +LOGIC PLUG BIT 1
252 JA80-14A 12A +LOGIC PLUG BIT 0
203 B10-02A 23B +CH II SEEK END
NC 03A +TIE HIGH
RGTR 520 A4
Σ 501 A3
A>B
A=B
A<B
+CH II SELECT COMPARE A 152
133 B03-15A 11A +CH II UNIT SELECT BIT 3
133 B03-15B 10B +CH II UNIT SELECT BIT 2
144 B04-04B 10A +CH II UNIT SELECT BIT 1
144 B04-04A 03B +CH II UNIT SELECT BIT 0
193 B09-32A 06A +SEEK END NC
203 B10-27A 06B +CH I SEEK END NC
202 B10-10A 07A +TIE HIGH NC
(GROUNDED BY SINGLE CHANNEL PLUG)
-CH II SELECT 33B 173 B07-08B
CONTROL DATA CORPORATION
NORMANDALE DIVISION
CH I & CH II ENABLE, BUSY, PROTECTED, SELECTED & SEEK END
(50 PIN I/O)
LOC: A2B05
CODE IDENT 19333
C
83322240
Z
E
CROSS REF NO 154
SHEET 4
PAGE 1-100.4

REVISION STATUS OF SHEETS

1	2	3	4	5	6	7	8	9	10	11	12	13	14	15	16	17	18	19	20
A	A	A	A																
B	B	B	B																
C	C	C	C																
D	D	D	D																
E	D	D	E																
F	F	D	E																
G	G	G	E																
H	H	G	E																

REVISIONS

REV.	ECO.	DESCRIPTION	DRFT	DATE	CHK'D
A	PE23000	RELEASED	GR		
B	PE48402	ERROR CORRECTIONS	VG	1-12-77	
C	PE48437	CARD CHANGE AKHV TO BKHV	SB	2-24-77	
D	PE48560	ADD GROUND TO INPUT PIN	SB	4-22-77	
E	PE48568	ENABLE / DISABLE ERROR CORRECTION	SB	4-26-77	
F	PE48716	BKHV TO EKHV	MA	5-8-78	
G	PE55608	EKHV M.V. CHANGE	MA	2-8-79	
H	PE57278	ADD WIRE INFO. TO LOGIC	CB	2-15-80	
J	PE60242	CHG I.C.'S ON EKHV A.Y.	MJ	5-30-83	

UNUSED LOGIC ELEMENTS

ELEMENT TYPE	LOCATION	OUTPUT PIN(S)
201	C2	8
201	D3A	3

MAINTANCE SWITCHES AND STATUS INDICATORS ON CARD EDGE

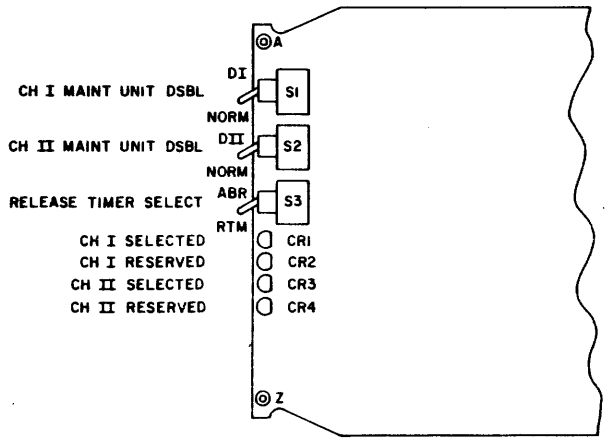

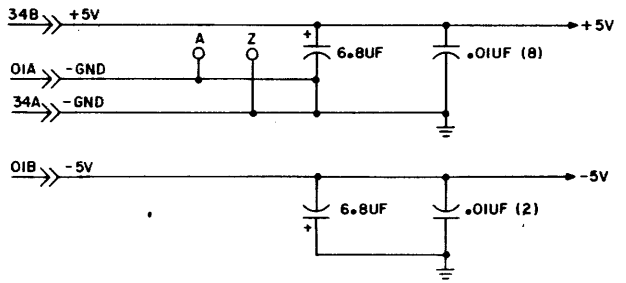

NOTE

1. ON SINGLE CHANNEL UNITS B05 IS A JUMPER PLUG

152 B05 - 14A ⟶ 154 B05 - 33A
153 B05 - 16A ⟶ 153 B05 - 16B
153 B05 - 21A ⟶ 153 B05 - 22A
154 B05 - 06A ⟶ 154 B05 - 06B
154 B05 - 07A ⟶ 151 B05 - 01A

THIS SET USED ON EKHV REV B & ABOVE (50 PIN I/O)

DRAWN	K Bergstrom	10-5-76
CHECKED		
ENGINEER		6/6/76
APPROVED		

CONTROL DATA CORPORATION
NORMANDALE DIVISION

DUAL CHANNEL STEERING DIAGRAMS
TYPE EKHV LOC A2B05

CODE IDENT				
19333	C	83322240	Z	J

CROSS REF NO 151 | SHEET 1 OF 4 | PAGE 1-101

REF 83214840

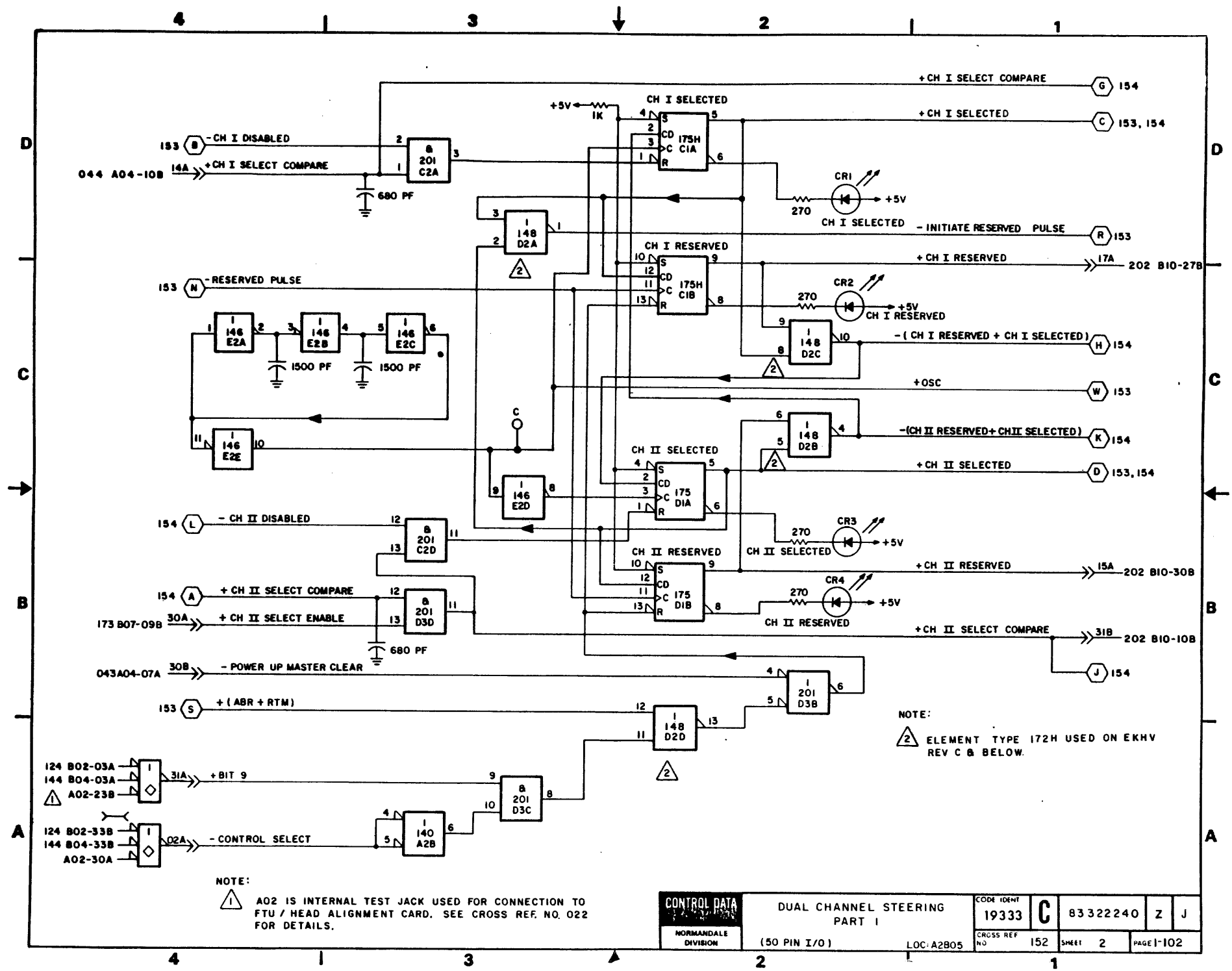
+CH I SELECT COMPARE
G 154
+5V
1K
CH I SELECTED
+CH I SELECTED
C 153, 154
153 B -CH I DISABLED
044 A04-10B 14A +CH I SELECT COMPARE
680 PF
CR1
270
+5V
CH I SELECTED
- INITIATE RESERVED PULSE
R 153
CH I RESERVED
+CH I RESERVED
17A 202 B10-27B
153 N -RESERVED PULSE
CR2
270
+5V
CH I RESERVED
-(CH I RESERVED + CH I SELECTED)
H 154
1500 PF
1500 PF
+OSC
W 153
-(CH II RESERVED+ CHII SELECTED)
K 154
CH II SELECTED
+CH II SELECTED
D 153, 154
154 L - CH II DISABLED
CR3
270
+5V
CH II SELECTED
CH II RESERVED
+CH II RESERVED
15A 202 B10-30B
154 A + CH II SELECT COMPARE
173 B07-09B 30A + CH II SELECT ENABLE
CR4
270
+5V
CH II RESERVED
680 PF
+CH II SELECT COMPARE
31B 202 B10-10B
J 154
043A04-07A 30B - POWER UP MASTER CLEAR
153 S + (ABR + RTM)
124 B02-03A
144 B04-03A
A02-23B
31A +BIT 9
124 B02-33B
144 B04-33B
A02-30A
02A - CONTROL SELECT
NOTE:
2 ELEMENT TYPE 172H USED ON EKHV REV C & BELOW.
NOTE:
1 A02 IS INTERNAL TEST JACK USED FOR CONNECTION TO FTU / HEAD ALIGNMENT CARD. SEE CROSS REF. NO. 022 FOR DETAILS.
CONTROL DATA
NORMANDALE DIVISION
DUAL CHANNEL STEERING
PART 1
(50 PIN I/O)
LOC: A2B05
CODE IDENT 19333
C
83322240
Z
J
CROSS REF NO 152
SHEET 2
PAGE 1-102

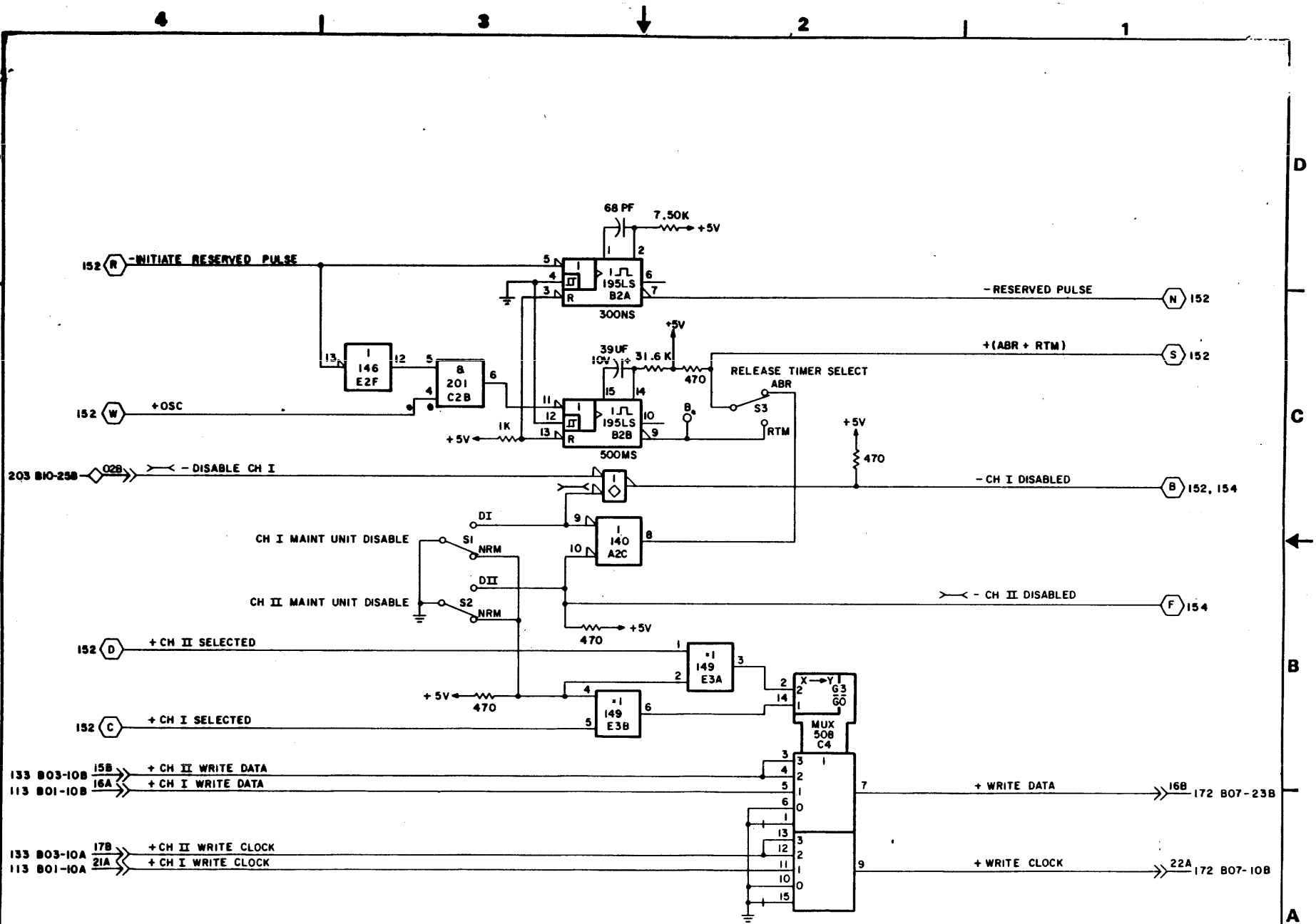

CONTROL DATA NORMANDALE DIVISION	DUAL CHANNEL STEERING PART 2 (50 PIN I/O) LOC A2B05	CODE IDENT 19333	C	83322240	Z	J	
		CROSS REF NO 153	SHEET 3	PAGE 1-103			

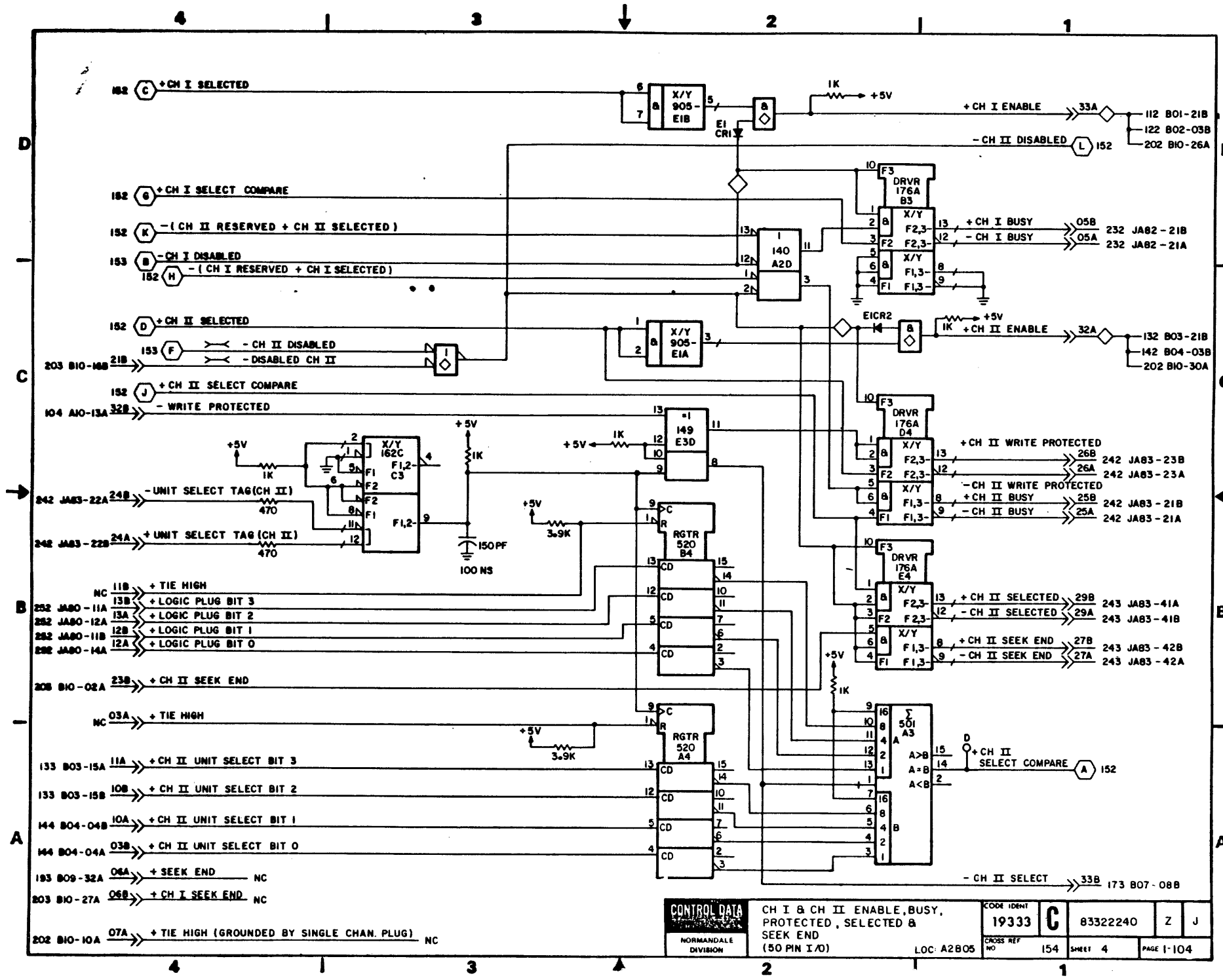
152 +CH I SELECTED
X/Y 905-E1B
EI CR1
1K +5V
+CH I ENABLE 33A
112 B01-21B
122 B02-03B
202 B10-26A
-CH II DISABLED L 152
152 +CH I SELECT COMPARE
152 -(CH II RESERVED + CH II SELECTED)
153 -CH I DISABLED
152 -(CH I RESERVED + CH I SELECTED)
F3 DRVR 176A B3
+CH I BUSY 05B 232 JA82-21B
-CH I BUSY 05A 232 JA82-21A
140 A2D
152 +CH II SELECTED
153 -CH II DISABLED
203 B10-16B 21B -DISABLED CH II
X/Y 905-E1A
EICR2
+CH II ENABLE 32A
132 B03-21B
142 B04-03B
202 B10-30A
152 +CH II SELECT COMPARE
104 A10-13A 32B -WRITE PROTECTED
149 E3D
F3 DRVR 176A D4
+CH II WRITE PROTECTED 26B 26A 242 JA83-23B 242 JA83-23A
-CH II WRITE PROTECTED
+CH II BUSY 25B 242 JA83-21B
-CH II BUSY 25A 242 JA83-21A
X/Y 162C F1,2 C3
242 JA83-22A 24B -UNIT SELECT TAG(CH II)
242 JA83-22B 24A +UNIT SELECT TAG(CH II)
470
150PF
100 NS
3.9K
RGTR 520 B4
F3 DRVR 176A E4
+CH II SELECTED 29B 29A 243 JA83-41A 243 JA83-41B
-CH II SELECTED
+CH II SEEK END 27B 27A 243 JA83-42B 243 JA83-42A
-CH II SEEK END
NC 11B +TIE HIGH
252 JA80-11A 13B +LOGIC PLUG BIT 3
252 JA80-12A 13A +LOGIC PLUG BIT 2
252 JA80-11B 12B +LOGIC PLUG BIT 1
252 JA80-14A 12A +LOGIC PLUG BIT 0
208 B10-02A 23B +CH II SEEK END
NC 03A +TIE HIGH
RGTR 520 A4
Σ 501 A3
A>B A=B A<B
D +CH II SELECT COMPARE A 152
133 B03-15A 11A +CH II UNIT SELECT BIT 3
133 B03-15B 10B +CH II UNIT SELECT BIT 2
144 B04-04B 10A +CH II UNIT SELECT BIT 1
144 B04-04A 03B +CH II UNIT SELECT BIT 0
193 B09-32A 06A +SEEK END NC
203 B10-27A 06B +CH I SEEK END NC
202 B10-10A 07A +TIE HIGH (GROUNDED BY SINGLE CHAN. PLUG) NC
-CH II SELECT 33B 173 B07-08B
CONTROL DATA NORMANDALE DIVISION
CH I & CH II ENABLE, BUSY, PROTECTED, SELECTED & SEEK END (50 PIN I/O)
LOC: A2B05
CODE IDENT 19333
C
83322240
Z
J
CROSS REF NO 154
SHEET 4
PAGE 1-104

REVISION STATUS OF SHEETS

1	2	3	4	5	6	7	8	9	10	11	12	13	14	15	16	17	18	19	20
A	A	A	A	A															
B	B	B	B	B															
C	B	B	B	C															
D	D	B	B	D															
E	D	B	E	E															
F																			
G				G															

REVISIONS

REV.	ECO.	DESCRIPTION	DRFT.	DATE	CHK'D
A	PE23000	RELEASED			
B	PE48402	CORRECT DIAGRAMS	WEB	12-17-76	
C	PE48523	CORR. DIA	DM	7-28-77	
D	PE55370	ERR CORR.	A A O	6-15-78	
E	PE57173	CHANGE IC FAMILIES	MF	11-5-80	
F	DJ22000	XFR FRM PE	JG	7-2584	
G	DJ00652	ELIM IC 9015 FLWV	JG	7-2584	
	DJ72000A	FORMAT CHG			

UNUSED LOGIC ELEMENTS

ELEMENT TYPE	LOCATION	OUTPUT PIN(S)
200	A1	8,10

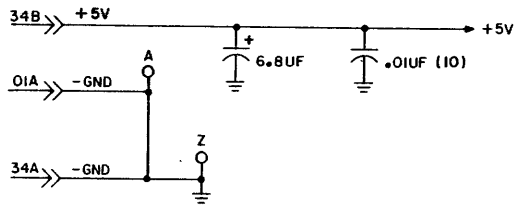

APPLICABLE TO BK5XX=9762

THIS DOCUMENT TRANSFERRED TO TCD DIVISION
DATE: 7/27/84

DRAWN	G RABINE	8/21/76
CHECKED		
ENGINEER		
APPROVED		

CONTROL DATA CORPORATION
TWIN CITIES DISK DIVISION

DIFFERENCE GENERATOR AND CONTROL DIAGRAMS
TYPE: FLWV
LOC A2B06

CODE IDENT				
19333	C	83322240	Z	G
CROSS REF NO. 161	SHEET 1 OF 5	PAGE 1-105		

REF 83214816

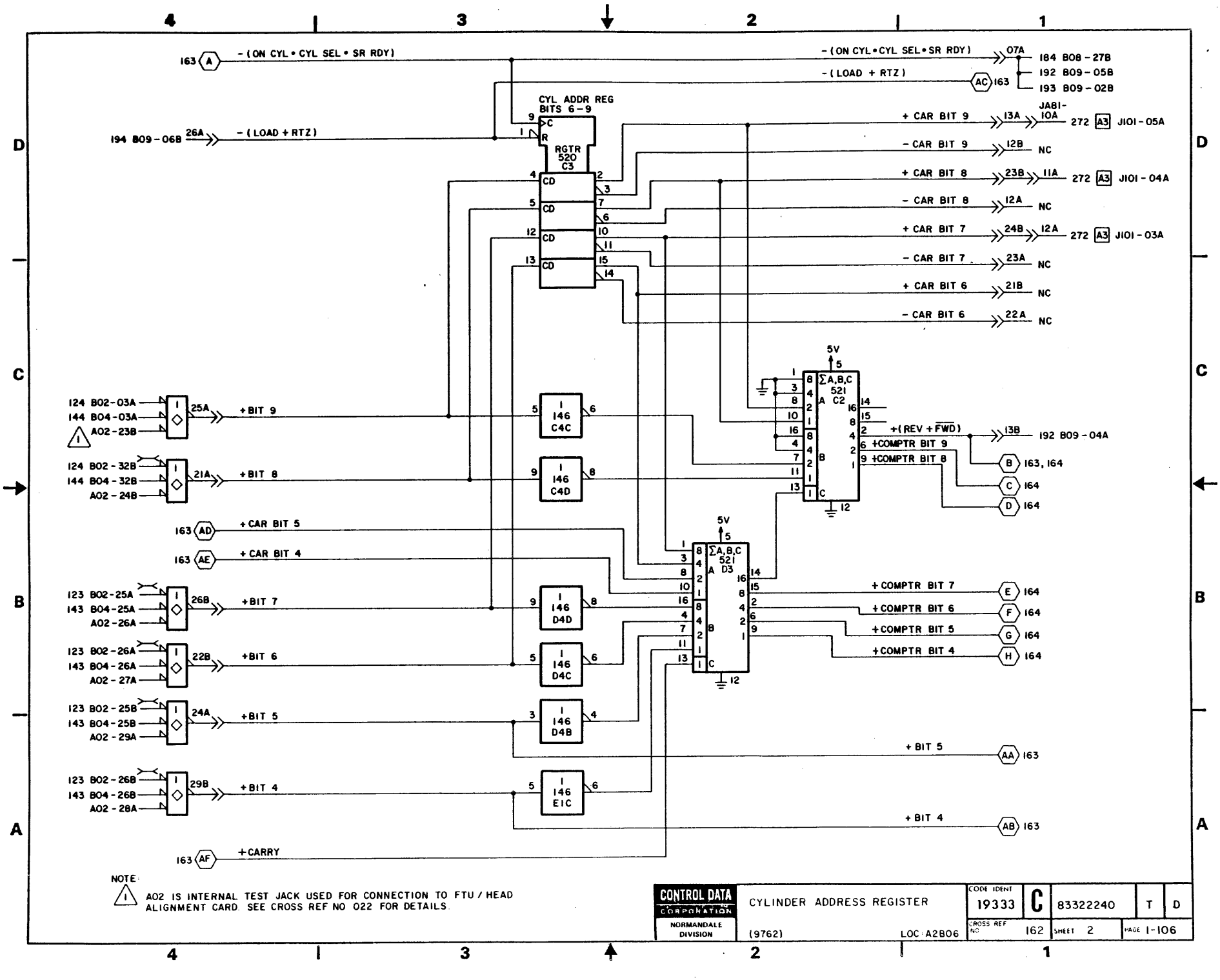
163 A - (ON CYL • CYL SEL • SR RDY)
- (ON CYL • CYL SEL • SR RDY) 07A
184 B08 - 27B
192 B09 - 05B
193 B09 - 02B
- (LOAD + RTZ) AC 163
CYL ADDR REG BITS 6-9
194 B09 - 06B 26A - (LOAD + RTZ)
RGTR 520 C3
+ CAR BIT 9 13A JA81-10A 272 A3 J101 - 05A
- CAR BIT 9 12B NC
+ CAR BIT 8 23B 11A 272 A3 J101 - 04A
- CAR BIT 8 12A NC
+ CAR BIT 7 24B 12A 272 A3 J101 - 03A
- CAR BIT 7 23A NC
+ CAR BIT 6 21B NC
- CAR BIT 6 22A NC
5V
ΣA,B,C 521 C2
+(REV + FWD) 13B 192 B09 - 04A
+COMPTR BIT 9
+COMPTR BIT 8
B 163, 164
C 164
D 164
124 B02-03A
144 B04-03A
A02-23B
25A +BIT 9
124 B02-32B
144 B04-32B
A02-24B
21A +BIT 8
146 C4C
146 C4D
163 AD +CAR BIT 5
163 AE +CAR BIT 4
ΣA,B,C 521 D3
+COMPTR BIT 7 E 164
+COMPTR BIT 6 F 164
+COMPTR BIT 5 G 164
+COMPTR BIT 4 H 164
123 B02-25A
143 B04-25A
A02-26A
26B +BIT 7
123 B02-26A
143 B04-26A
A02-27A
22B +BIT 6
123 B02-25B
143 B04-25B
A02-29A
24A +BIT 5
146 D4D
146 D4C
146 D4B
+BIT 5 AA 163
123 B02-26B
143 B04-26B
A02-28A
29B +BIT 4
146 E1C
+BIT 4 AB 163
163 AF +CARRY
NOTE
1 A02 IS INTERNAL TEST JACK USED FOR CONNECTION TO FTU / HEAD ALIGNMENT CARD. SEE CROSS REF NO 022 FOR DETAILS.
CONTROL DATA CORPORATION
NORMANDALE DIVISION
CYLINDER ADDRESS REGISTER
(9762)
LOC: A2B06
CODE IDENT 19333
C
83322240
T
D
CROSS REF NO 162
SHEET 2
PAGE 1-106

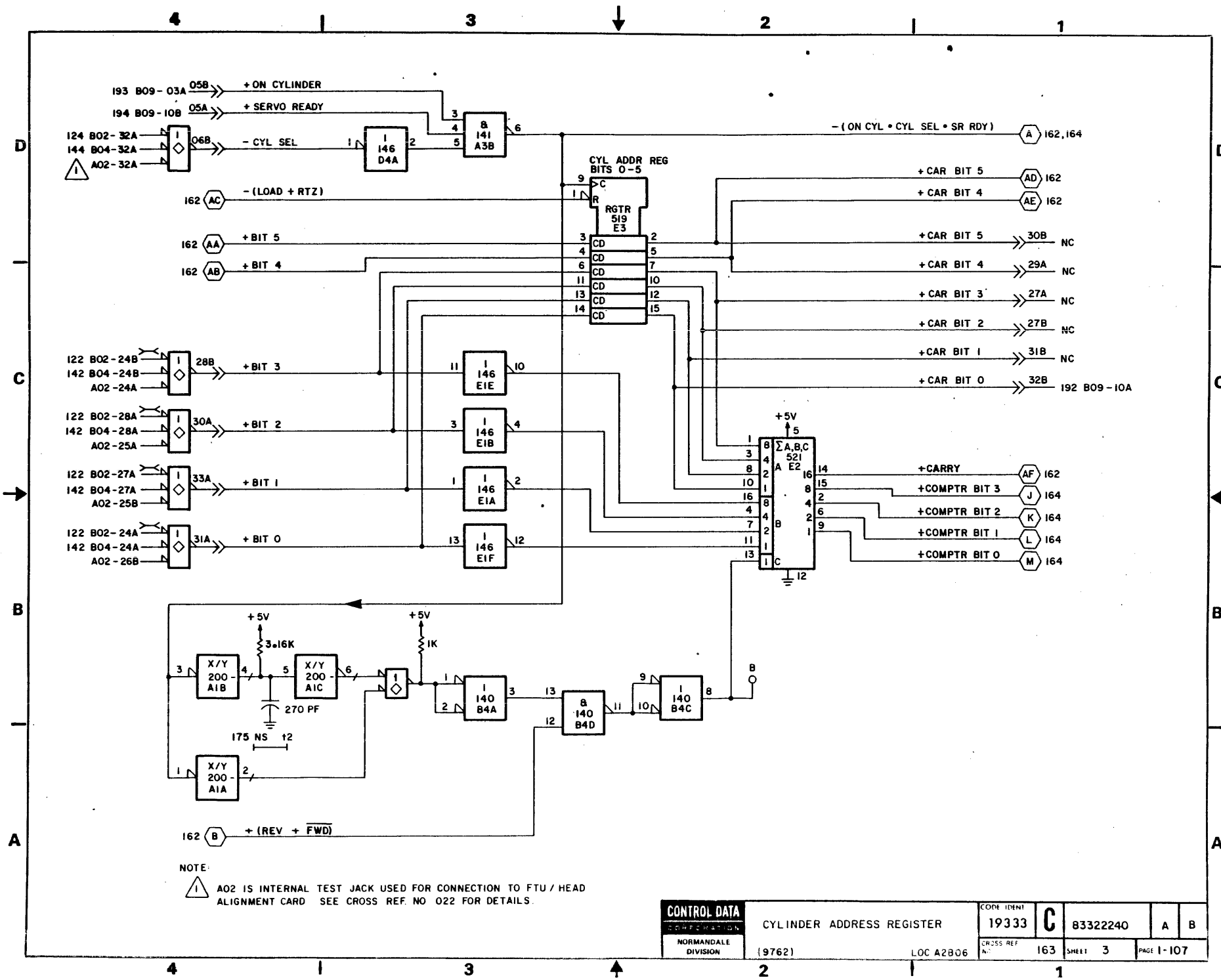

NOTE

1. A02 IS INTERNAL TEST JACK USED FOR CONNECTION TO FTU / HEAD ALIGNMENT CARD SEE CROSS REF. NO 022 FOR DETAILS.

CONTROL DATA CORPORATION NORMANDALE DIVISION	CYLINDER ADDRESS REGISTER	CODE IDENT 19333	C	83322240	A	B
	(9762) LOC A2B06	CROSS REF NO 163		SHEET 3	PAGE 1-107	

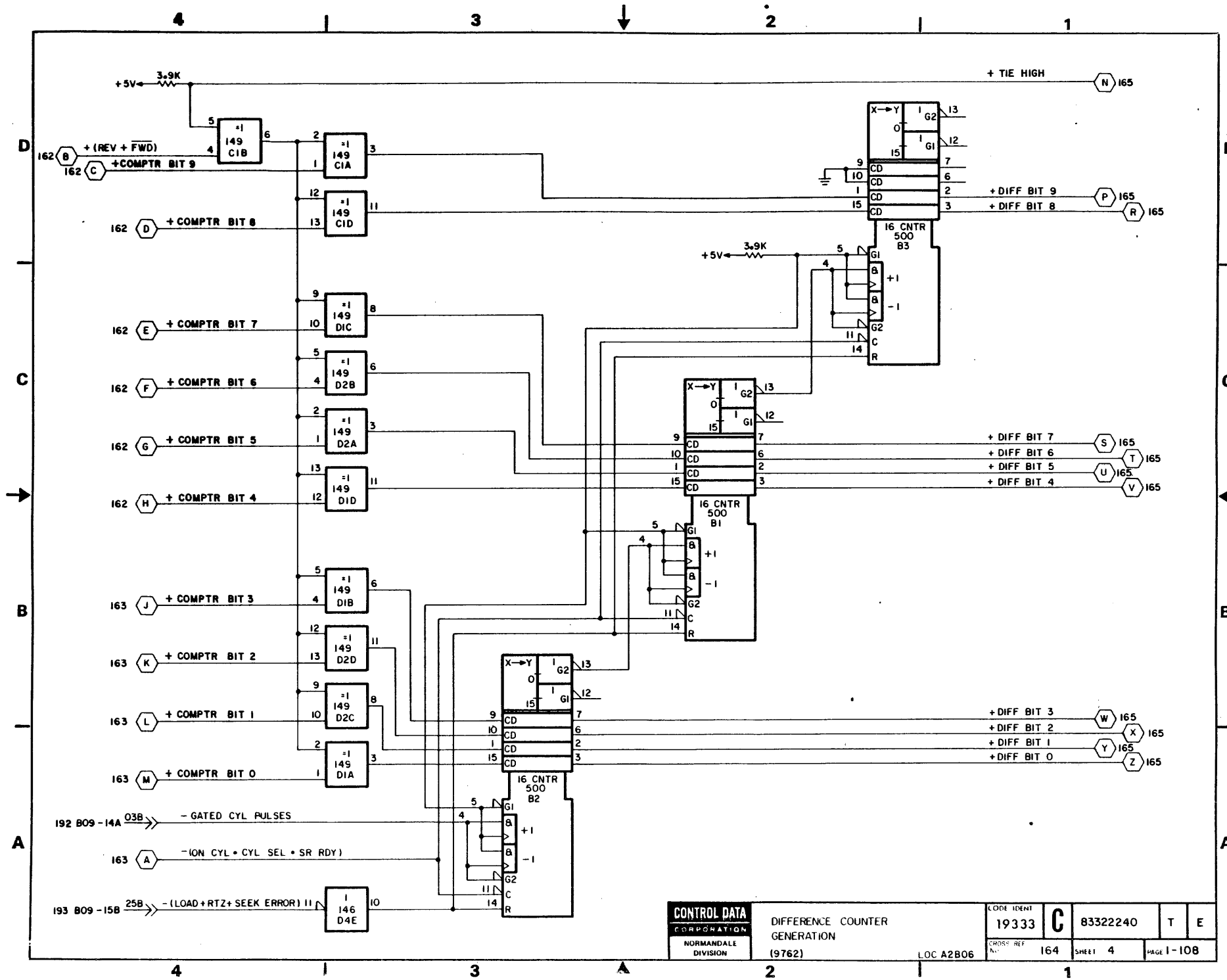
+5V
3.9K
+ TIE HIGH
N 165
=1 149 C1B
=1 149 C1A
=1 149 C1D
=1 149 D1C
=1 149 D2B
=1 149 D2A
=1 149 D1D
=1 149 D1B
=1 149 D2D
=1 149 D2C
=1 149 D1A
1 146 D4E
162 B + (REV + FWD)
162 C + COMPTR BIT 9
162 D + COMPTR BIT 8
162 E + COMPTR BIT 7
162 F + COMPTR BIT 6
162 G + COMPTR BIT 5
162 H + COMPTR BIT 4
163 J + COMPTR BIT 3
163 K + COMPTR BIT 2
163 L + COMPTR BIT 1
163 M + COMPTR BIT 0
192 B09-14A 03B - GATED CYL PULSES
163 A -(ON CYL • CYL SEL • SR RDY)
193 B09-15B 25B -(LOAD+RTZ+SEEK ERROR) 11
16 CNTR 500 B3
16 CNTR 500 B1
16 CNTR 500 B2
X→Y
G2
GI
CD
+1
-1
C
R
+ DIFF BIT 9 P 165
+ DIFF BIT 8 R 165
+ DIFF BIT 7 S 165
+ DIFF BIT 6 T 165
+ DIFF BIT 5 U 165
+ DIFF BIT 4 V 165
+ DIFF BIT 3 W 165
+ DIFF BIT 2 X 165
+ DIFF BIT 1 Y 165
+ DIFF BIT 0 Z 165
CONTROL DATA CORPORATION
NORMANDALE DIVISION
DIFFERENCE COUNTER GENERATION
(9762)
LOC A2B06
CODE IDENT 19333
C
83322240
T
E
CROSS REF IN 164
SHEET 4
PAGE 1-108

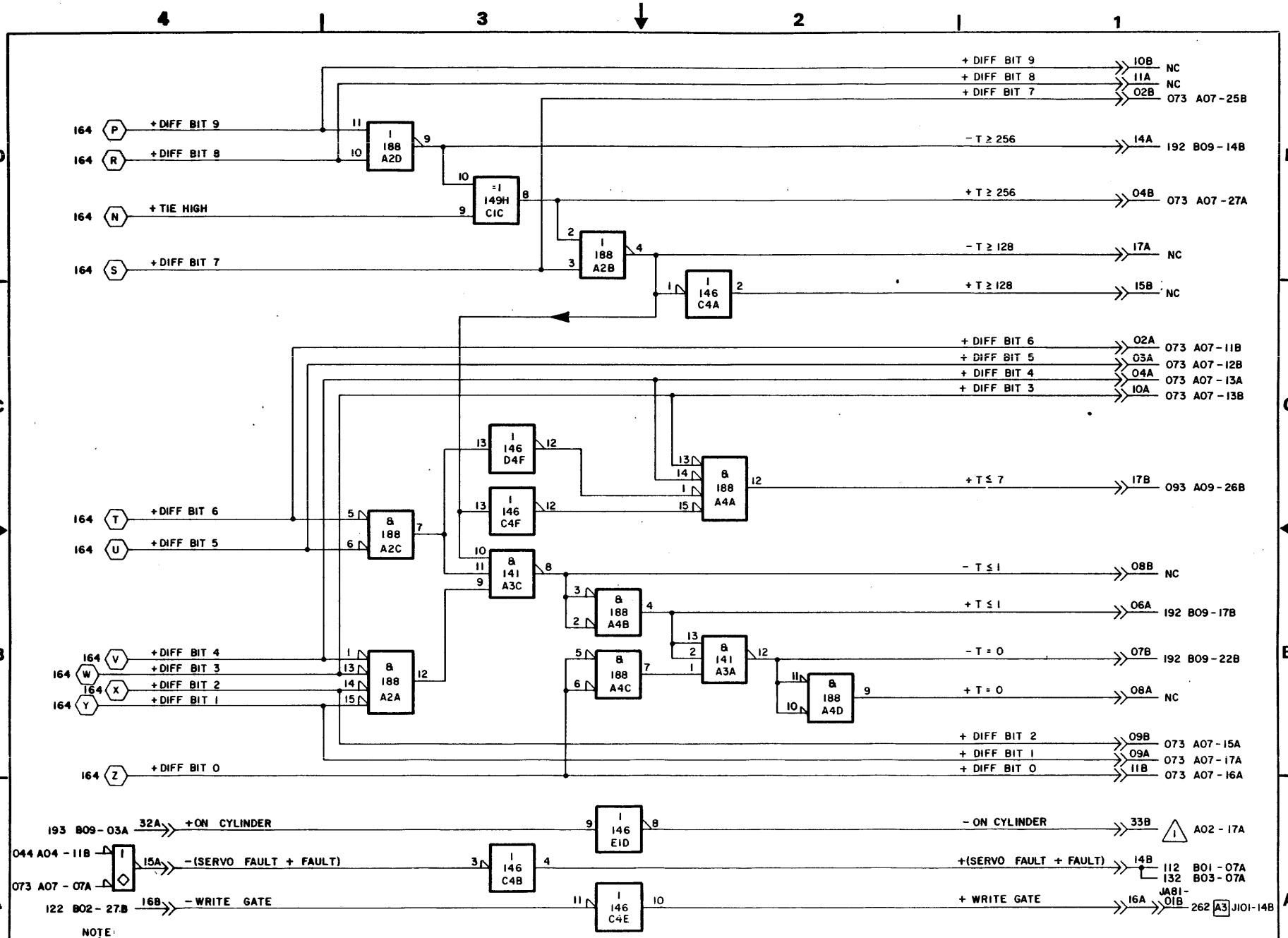
+DIFF BIT 9
+DIFF BIT 8
+DIFF BIT 7
+DIFF BIT 6
+DIFF BIT 5
+DIFF BIT 4
+DIFF BIT 3
+DIFF BIT 2
+DIFF BIT 1
+DIFF BIT 0
+TIE HIGH
-T ≥ 256
+T ≥ 256
-T ≥ 128
+T ≥ 128
+T ≤ 7
-T ≤ 1
+T ≤ 1
-T = 0
+T = 0
-ON CYLINDER
+ON CYLINDER
-(SERVO FAULT + FAULT)
+(SERVO FAULT + FAULT)
-WRITE GATE
+WRITE GATE
NC
073 A07-25B
192 B09-14B
073 A07-27A
NC
NC
073 A07-11B
073 A07-12B
073 A07-13A
073 A07-13B
093 A09-26B
NC
192 B09-17B
192 B09-22B
NC
073 A07-15A
073 A07-17A
073 A07-16A
A02-17A
112 B01-07A
132 B03-07A
262 A3 J101-14B
NOTE:
A02 IS INTERNAL TEST JACK USED FOR CONNECTION TO FTU / HEAD ALIGNMENT CARD. SEE CROSS REF. NO. 022 FOR DETAILS.
THIS SHEET USED FOR FLWV REV F & BELOW
CONTROL DATA CORPORATION
NORMANDALE DIVISION
DIFFERENCE COUNTER OUTPUT
(9762)
LOC A2B06
CODE IDENT 19333
C
83322240
Z
E
CROSS REF NO 165
SHEET 5
PAGE 1-109

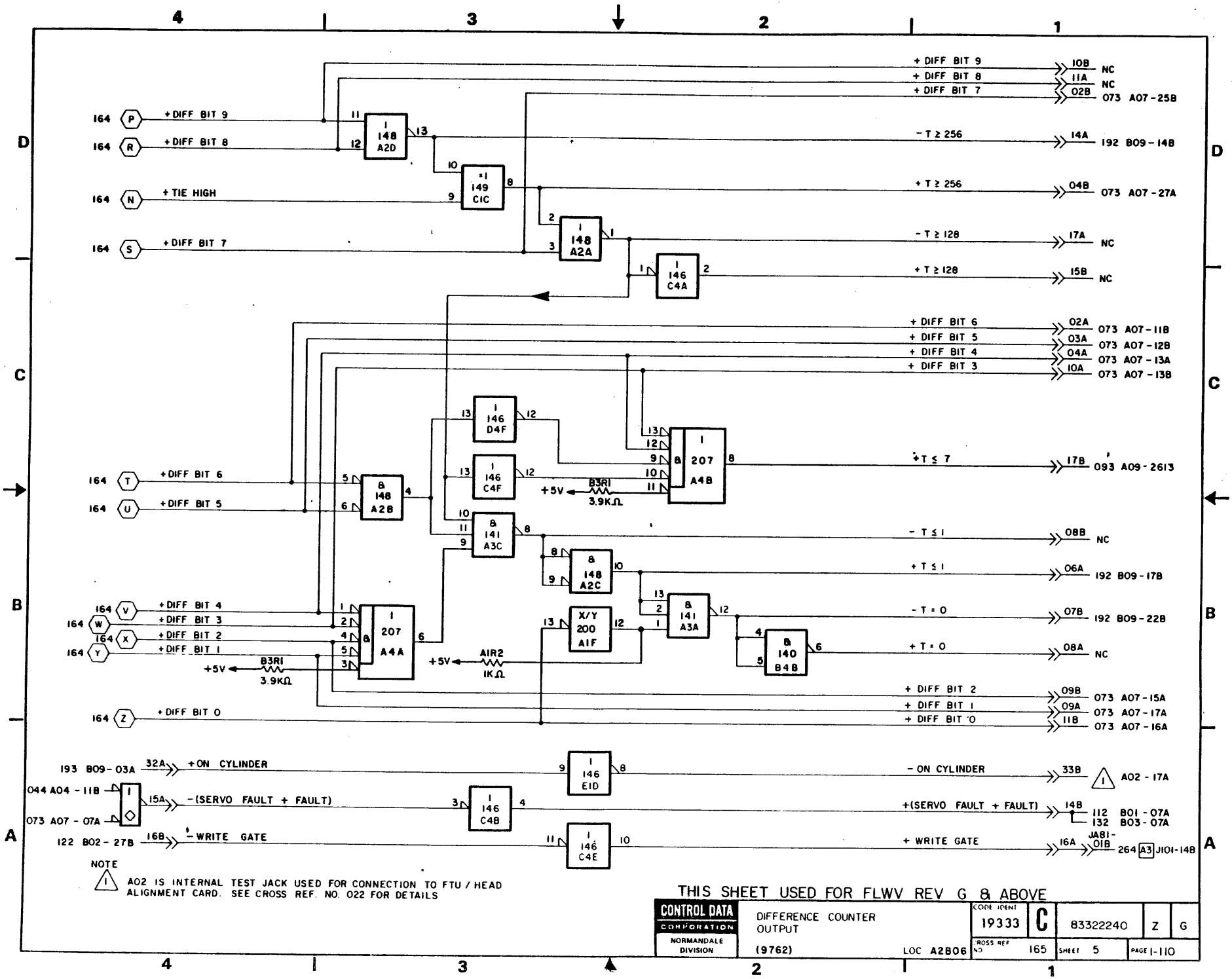
+DIFF BIT 9
+DIFF BIT 8
+DIFF BIT 7
+DIFF BIT 6
+DIFF BIT 5
+DIFF BIT 4
+DIFF BIT 3
+DIFF BIT 2
+DIFF BIT 1
+DIFF BIT 0
+TIE HIGH
-T ≥ 256
+T ≥ 256
-T ≥ 128
+T ≥ 128
+T ≤ 7
-T ≤ 1
+T ≤ 1
-T = 0
+T = 0
+5V
3.9KΩ
1KΩ
B3R1
AIR2
-ON CYLINDER
+ON CYLINDER
-(SERVO FAULT + FAULT)
+(SERVO FAULT + FAULT)
-WRITE GATE
+WRITE GATE
NC
073 A07-25B
073 A07-27A
073 A07-11B
073 A07-12B
073 A07-13A
073 A07-13B
093 A09-26B
192 B09-14B
192 B09-17B
192 B09-22B
073 A07-15A
073 A07-17A
073 A07-16A
193 B09-03A
044 A04-11B
073 A07-07A
122 B02-27B
A02-17A
112 B01-07A
132 B03-07A
264 A3 J101-14B
NOTE
AO2 IS INTERNAL TEST JACK USED FOR CONNECTION TO FTU / HEAD ALIGNMENT CARD. SEE CROSS REF. NO. 022 FOR DETAILS
THIS SHEET USED FOR FLWV REV G & ABOVE
CONTROL DATA CORPORATION
NORMANDALE DIVISION
DIFFERENCE COUNTER OUTPUT
(9762)
LOC A2B06
CODE IDENT 19333
C
83322240
Z
G
CROSS REF NO 165
SHEET 5
PAGE 1-110

REVISIONS					
REV	ECO.	DESCRIPTION	DRFT	DATE	CHK'D
A	PE23000	RELEASED	GR		
B	PE48402	CORR DIA			
C	PE48675	ERR CORR	DM	1-25-78	
D	PE57262	CHG IC FAMILIES	MF	7-13-81	
E	DJ22000 DJ72000B	XFER FROM PE FORMAT CHANGE	M R	1-30-85	
F	DJ00708	CHANGE ELXV COMP AY	M R	1-30-85	
G	DJ00708A	CHANGE ELXV COMP AY	M R	1-30-85	

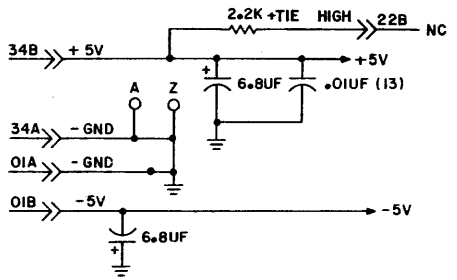

APPLICABLE TO UNITS W/O INDEX & SECTOR ON A&B CABLES.

DRAWN	G RABINE	8/25/76
CHECKED		
ENGINEER		
APPROVED		

CONTROL DATA CORPORATION
TWIN CITIES DISK DIVISION

NRZ TO COMPENSATED MFM DIAGRAMS

TYPE ELXV LOC A2B07

CODE IDENT				
19333	C	83322240	AA	G
CROSS REF NO 171	SHEET 1 OF 3	PAGE 1-111		

REF 83214817

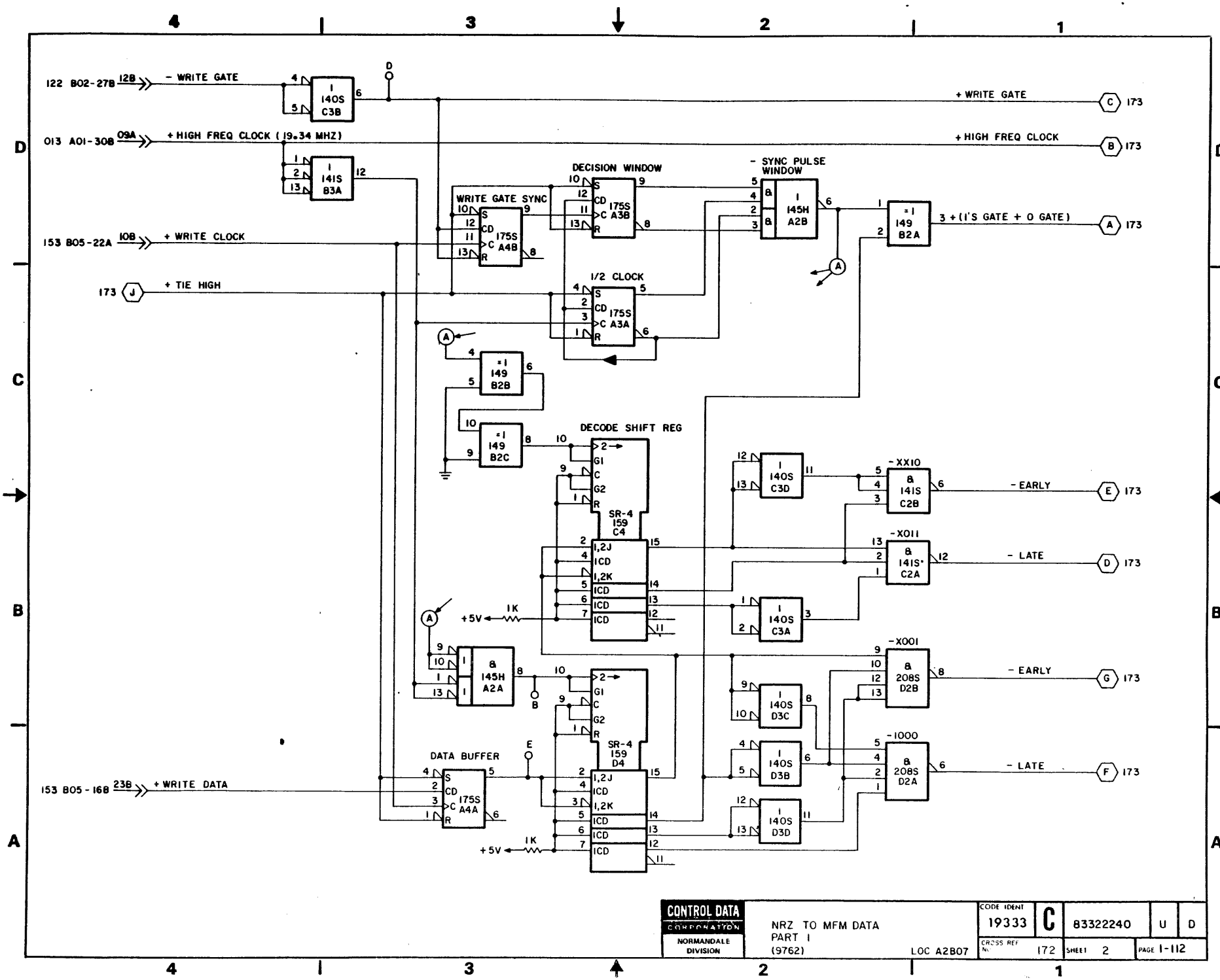

CONTROL DATA CORPORATION NORMANDALE DIVISION	NRZ TO MFM DATA PART 1 (9762) LOC A2B07	CODE IDENT 19333	C	83322240	U	D
		CROSS REF No. 172		SHEET 2	PAGE 1-112	

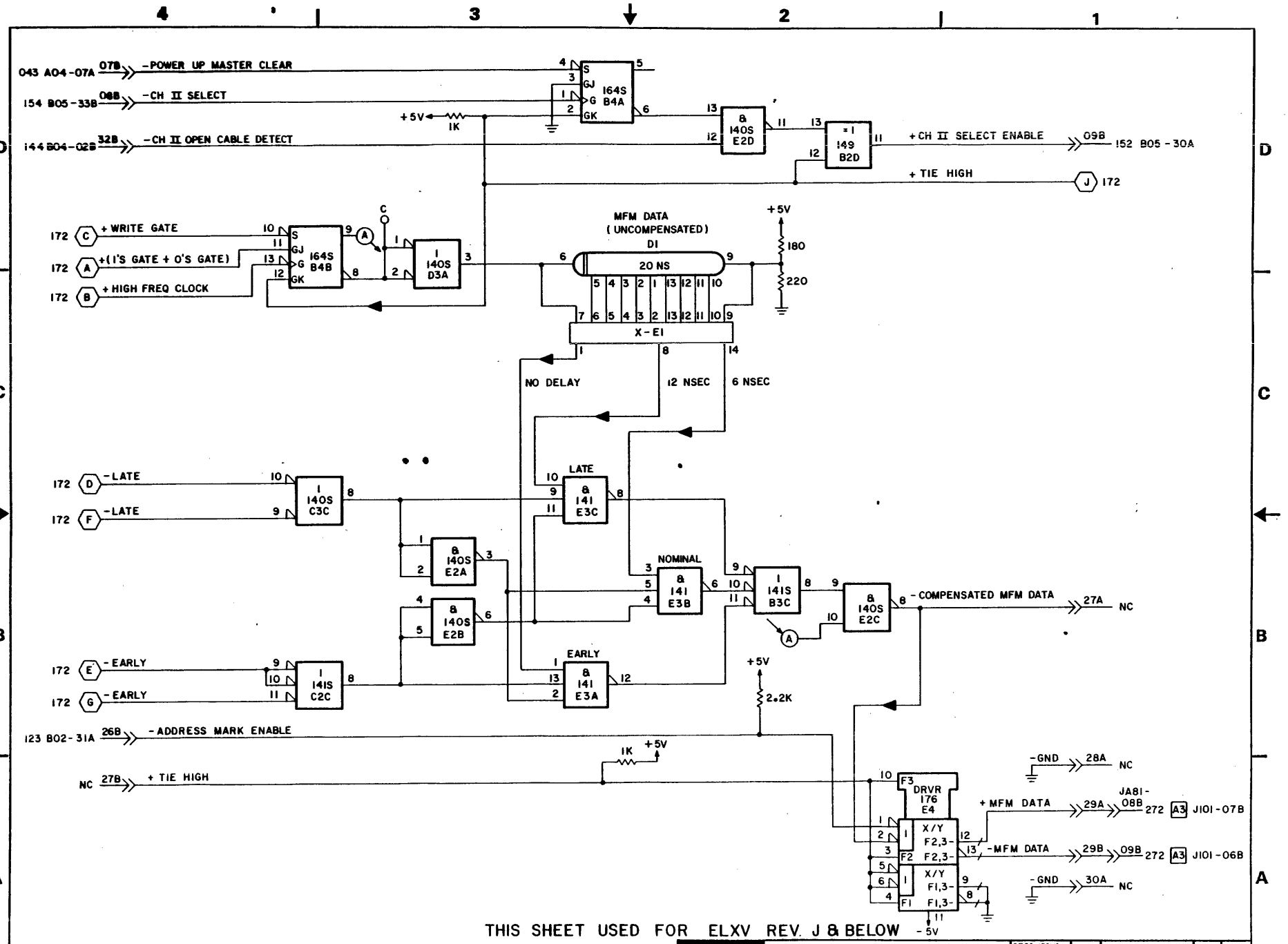

THIS SHEET USED FOR ELXV REV. J & BELOW

CONTROL DATA CORPORATION TWIN CITIES DISK DIVISION	NRZ TO MFM DATA PART 2 (9762) LOC A2B07	CODE IDENT 19333	C	83322240	AA D
		CROSS REF NO 173	SHEET 3	PAGE 1-113	

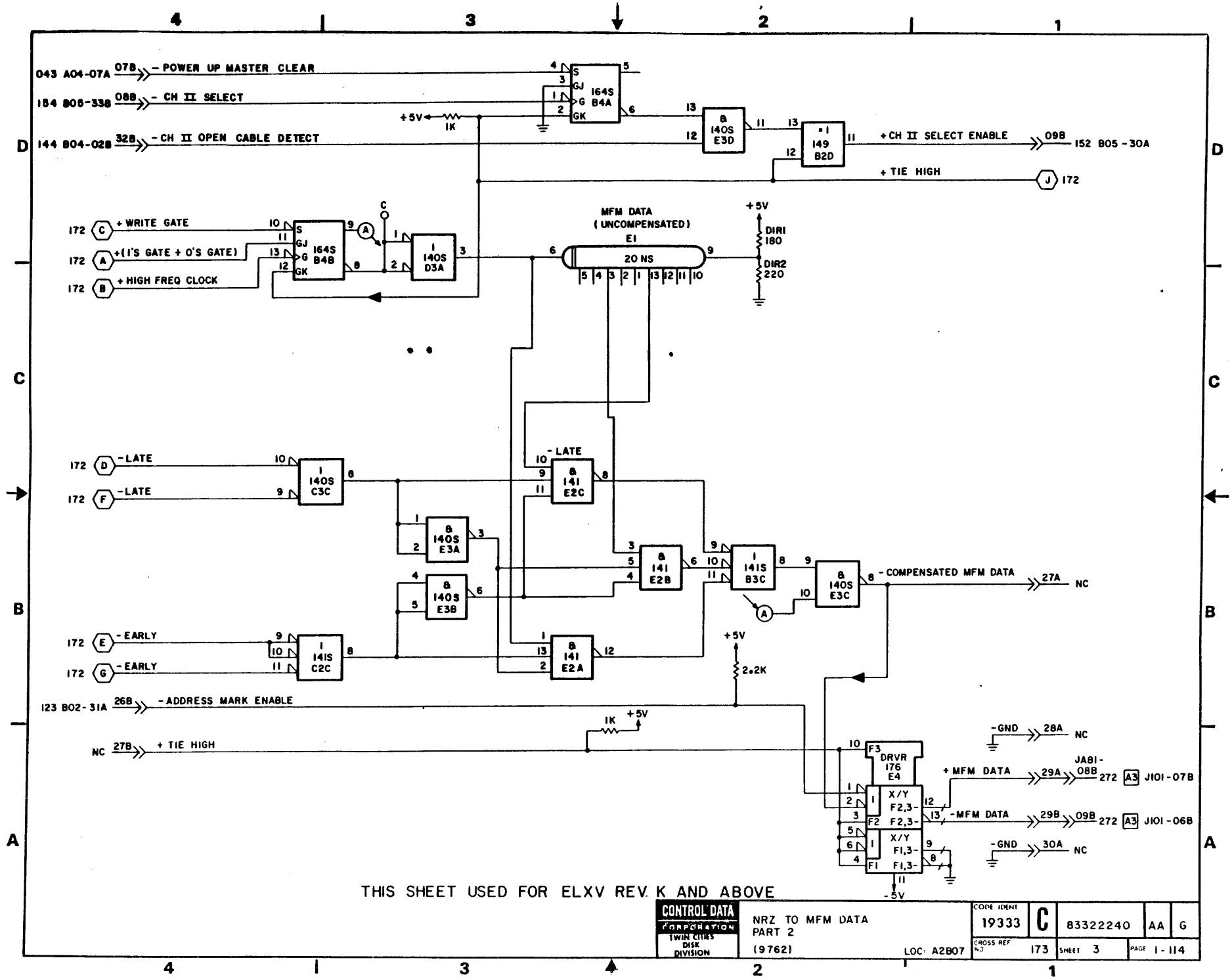

THIS SHEET USED FOR ELXV REV. K AND ABOVE

CONTROL DATA CORPORATION TWIN CITIES DISK DIVISION

NRZ TO MFM DATA
PART 2
(9762)
LOC: A2B07

CODE IDENT				
19333	C	83322240	AA	G
CROSS REF NO 173	SHEET 3	PAGE 1-114		

REVISIONS					
REV	ECO	DESCRIPTION	DRFT.	DATE	CHK'D
A	PE23000	RELEASED CREATED FROM 83215517, REV A	[illegible]	[illegible]	[illegible]

REVISION STATUS OF SHEETS

1	2	3	4	5	6	7	8	9	10	11	12	13	14	15	16	17	18	19	20
A	A	A	A																

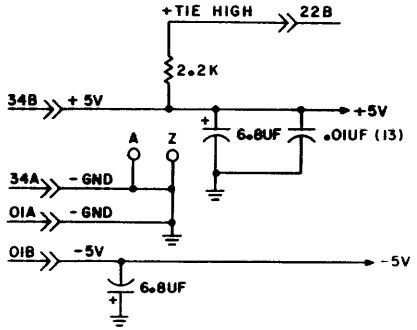

NOTE:

1. DELAY LINES ARE CONNECTED TO JUMPER BLOCK AS SHOWN IN DIAGRAM AT THE RIGHT. ACTUAL DELAYS ARE SELECTED DURING MANUFACTURING. THIS DIAGRAM SHOWS TYPICAL CONNECTIONS. DELAY TIME FOR EACH DELAY LINE PIN RELATIVE TO PIN 6 INPUT IS SHOWN IN CHART TO THE RIGHT.

PIN	20NS DELAY
5	2 NS
4	4 NS
3	6 NS
2	8 NS
1	10 NS
13	12 NS
12	14 NS
11	16 NS
10	18 NS
9	20 NS

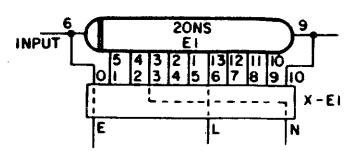

APPLICABLE TO UNITS W/INDEX & SECTOR ON A & B CABLES.

DRAWN	[illegible]	CONTROL DATA NORMANDALE DIVISION	NRZ TO COMPENSATED MFM DIAGRAMS	CODE IDENT 19333	C	83322240	V	A
CHECKED	[illegible] 11/30/74							
ENGINEER	[illegible] 11/30/74							
APPROVED			TYPE FLXV LOC A2B07	CROSS REF NO 171	SHEET 1 OF 4	PAGE 1-114.1		

REF: 83214858

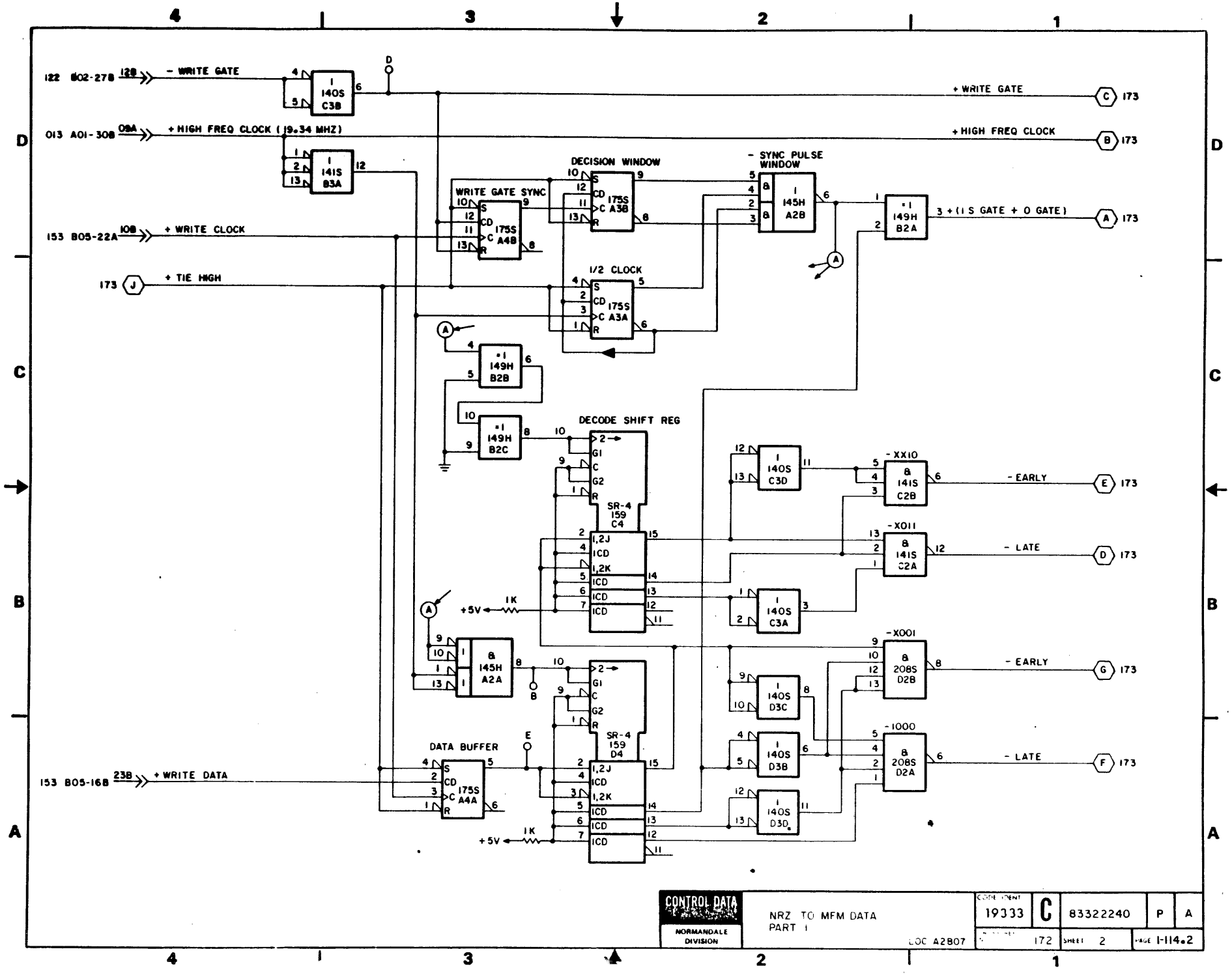

CONTROL DATA NORMANDALE DIVISION	NRZ TO MFM DATA PART 1	LOC A2807	CODE IDENT 19333	C	83322240 P A
			SIZE	172	SHEET 2 PAGE 1-114.2

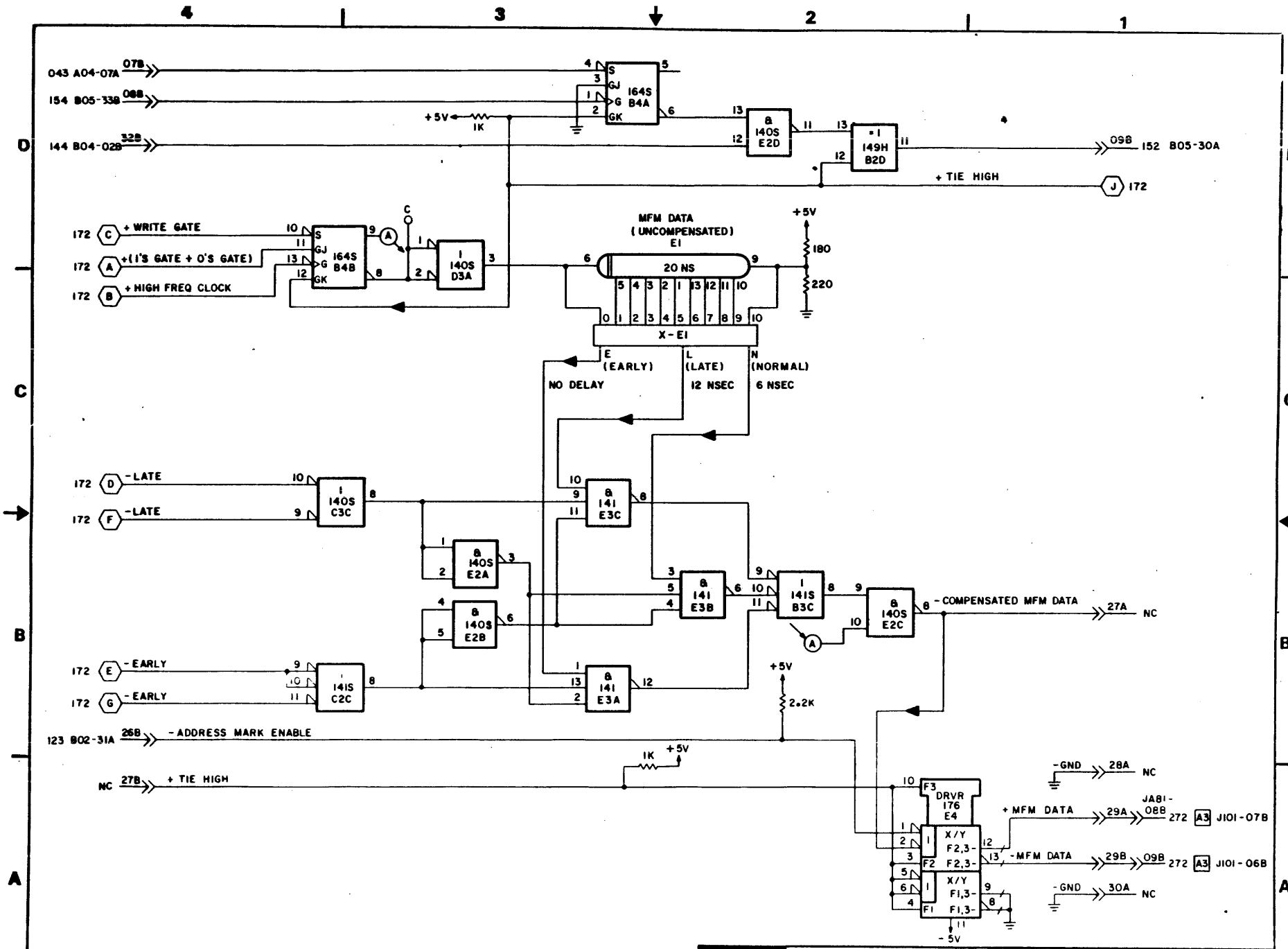

CONTROL DATA NORMANDALE DIVISION	NRZ TO MFM DATA PART 2 LOC A2B07	CODE IDENT 19333	C	83322240	P A
		CROSS REF NO. 173		SHEET 3	PAGE 1-114.3

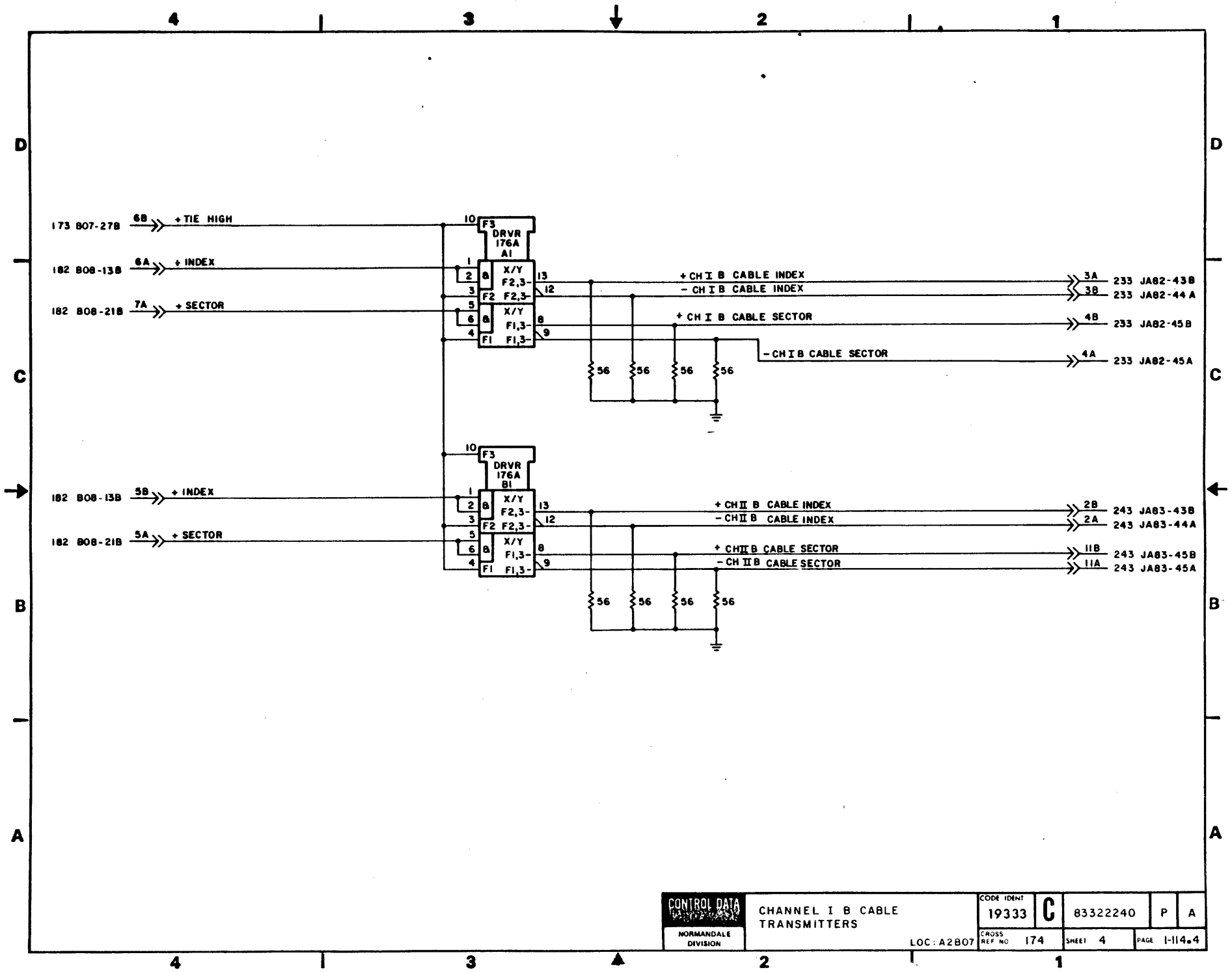

CONTROL DATA
NORMANDALE DIVISION

CHANNEL I B CABLE TRANSMITTERS

LOC: A2B07

CODE IDENT				
19333	C	83322240	P	A

CROSS REF NO 174 | SHEET 4 | PAGE 1-114.4

REVISIONS					
REV	ECO	DESCRIPTION	DRFT	DATE	CHK'D
A	DJ23000 DJ00771	CLASS A RELEASE INCORP LLXV CARD	C. B. D.	11/15/84	

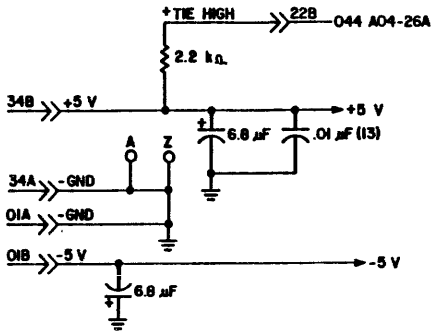

		JD90	PD90		
I34 A13-03A	+CH I INDEX	14A	A3	782 J2-24	
I34 A13-03B	-CH I INDEX	14B	A3	782 J2-12	
I34 A13-04B	+CH I SECTOR	13A	A3	782 J2-26	
I34 A13-04A	-CH I SECTOR	13B	A3	782 J2-13	
		JD90	PD90		
I34 A13-02B	+CH II INDEX	12A	A3	783 J2-24	
I34 A13-02A	-CH II INDEX	12B	A3	783 J2-12	
I34 A13-11B	+CH II SECTOR	11A	A3	783 J2-26	
I34 A13-11A	-CH II SECTOR	11B	A3	783 J2-13	

NOTES:

1. PD90 IS AN I/O CABLE CONNECTOR THAT IS PLUGGED ON TO THE PINS OF JD90 TO PLACE INDEX AND SECTOR SIGNALS ON THE B CABLE.

APPLICABLE TO BK5A3N/P AND BK5C7C/D

DRAWN	K MONAMARA	10 4 84	CONTROL DATA	NRZ TO COMPENSATED MFM DIAGRAMS	CODE IDENT 19333	C	83322240	AA	A
CHECKED	C Rumble	10/4/84	TWIN CITIES DISK DIVISION	TYPE: LLXV LOC A13	CROSS REF NO 131	SHEET 1 OF 4	PAGE 1-114.5		
ENGINEER									
APPROVED									

REF 83214876

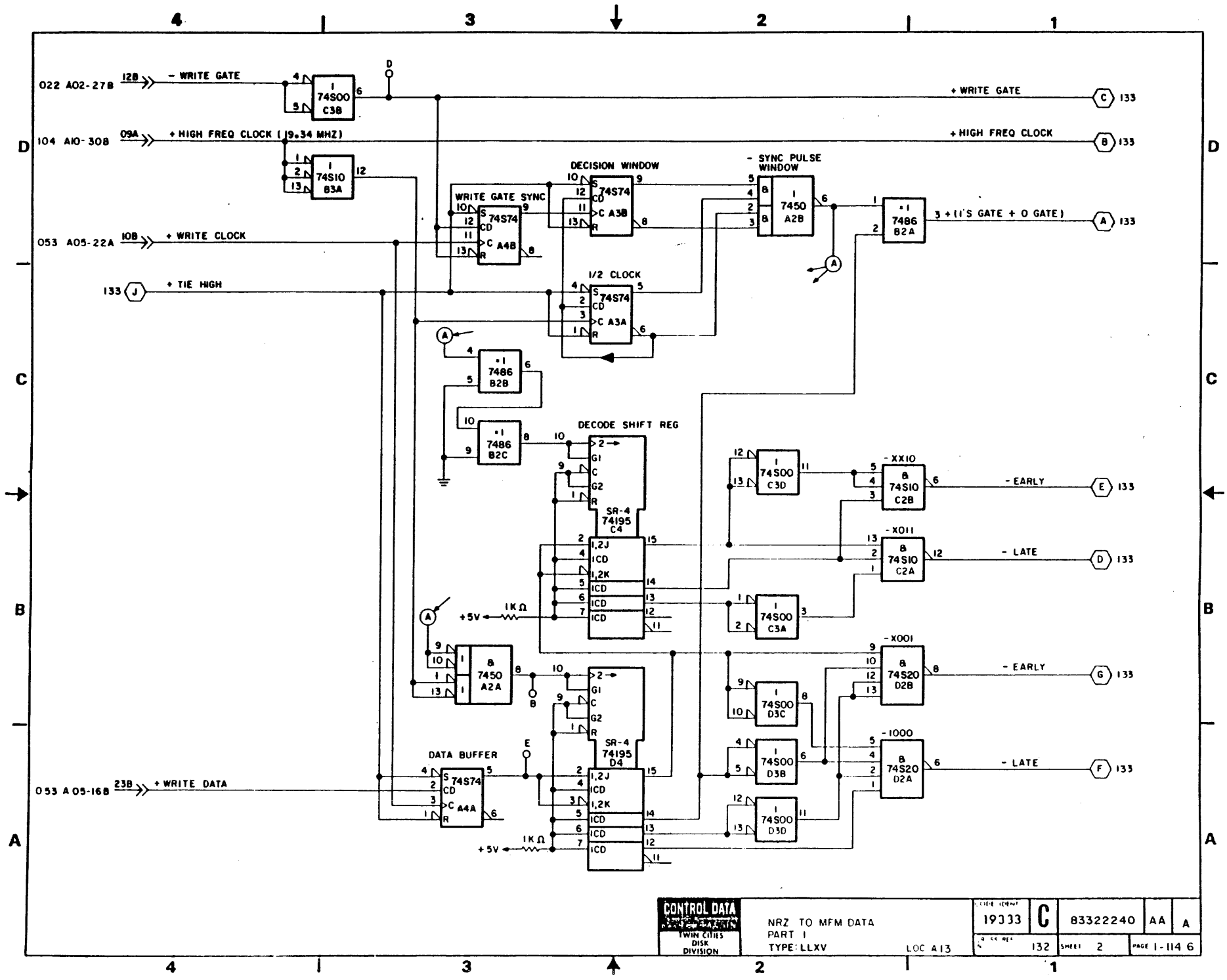
022 A02-27B
12B
- WRITE GATE
74S00 C3B
+ WRITE GATE
C 133
104 A10-30B
09A
+ HIGH FREQ CLOCK (19.34 MHZ)
74S10 B3A
+ HIGH FREQ CLOCK
B 133
DECISION WINDOW
WRITE GATE SYNC
74S74 A4B
74S74 A3B
- SYNC PULSE WINDOW
7450 A2B
7486 B2A
3 + (1'S GATE + 0 GATE)
A 133
053 A05-22A
10B
+ WRITE CLOCK
133
J
+ TIE HIGH
1/2 CLOCK
74S74 A3A
7486 B2B
7486 B2C
DECODE SHIFT REG
SR-4 74195 C4
SR-4 74195 D4
1KΩ
+5V
7450 A2A
DATA BUFFER
74S74 A4A
053 A05-16B
23B
+ WRITE DATA
74S00 C3D
74S10 C2B
- XX10
- EARLY
E 133
74S10 C2A
- XX11
- LATE
D 133
74S00 C3A
74S00 D3C
74S20 D2B
- X001
- EARLY
G 133
74S00 D3B
74S20 D2A
- 1000
- LATE
F 133
74S00 D3D
CONTROL DATA
TWIN CITIES DISK DIVISION
NRZ TO MFM DATA
PART 1
TYPE: LLXV
LOC A13
19333
C
83322240
AA
A
132
SHEET 2
PAGE 1-114 6

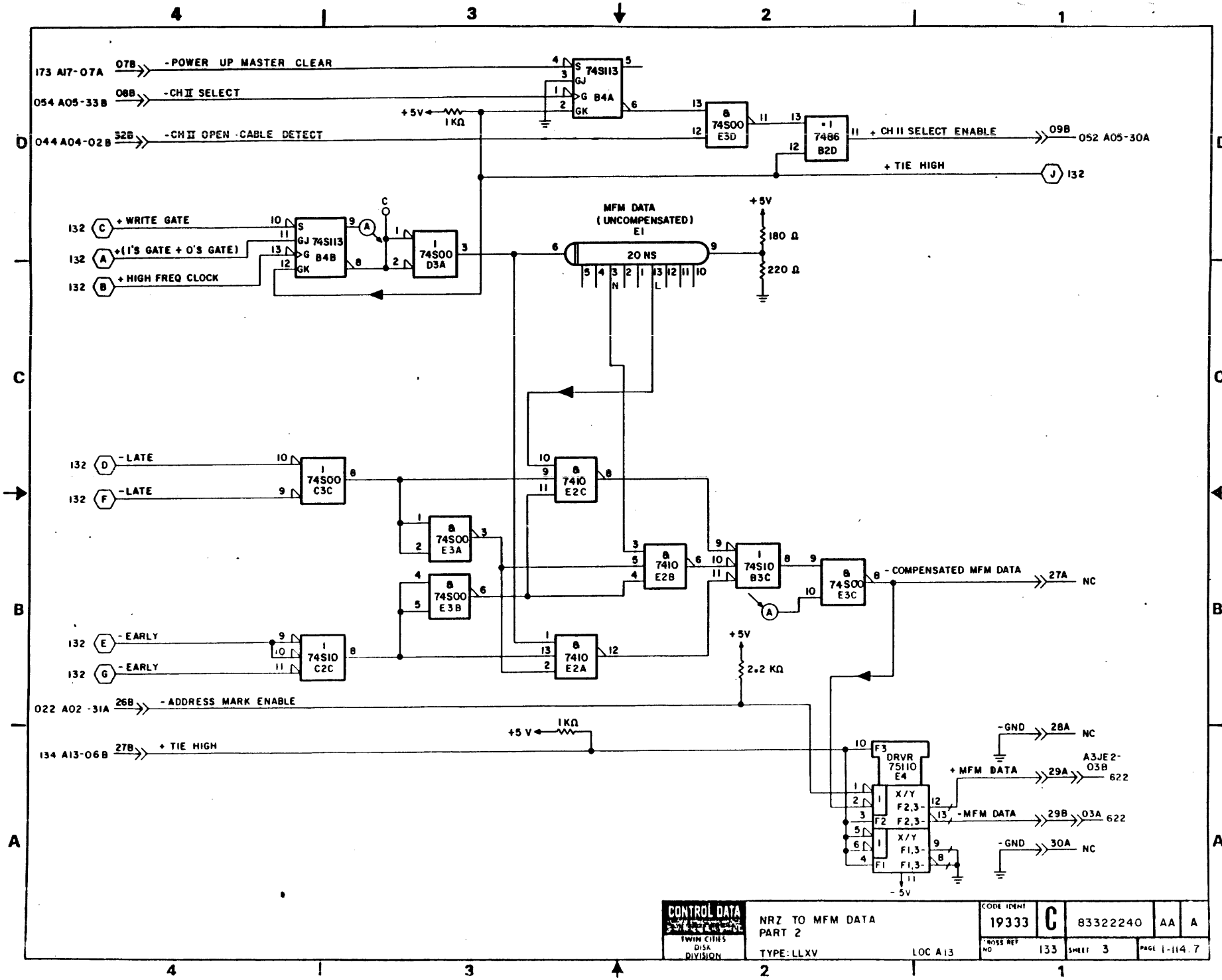
-POWER UP MASTER CLEAR
-CH II SELECT
-CH II OPEN CABLE DETECT
+5V
1KΩ
74S113
74S00 E3D
7486 B2D
+ CH II SELECT ENABLE
+ TIE HIGH
+ WRITE GATE
+(1'S GATE + 0'S GATE)
+ HIGH FREQ CLOCK
74S113 B4B
74S00 D3A
MFM DATA (UNCOMPENSATED) E1
20 NS
180 Ω
220 Ω
-LATE
-LATE
74S00 C3C
7410 E2C
74S00 E3A
74S00 E3B
7410 E2B
74S10 B3C
74S00 E3C
- COMPENSATED MFM DATA
-EARLY
-EARLY
74S10 C2C
7410 E2A
2.2 KΩ
- ADDRESS MARK ENABLE
+ TIE HIGH
DRVR 75110 E4
-GND
+ MFM DATA
- MFM DATA
-5V
CONTROL DATA
TWIN CITIES DISA DIVISION
NRZ TO MFM DATA
PART 2
TYPE: LLXV
LOC A13
19333
C
83322240
AA
A
133
3
1-114.7

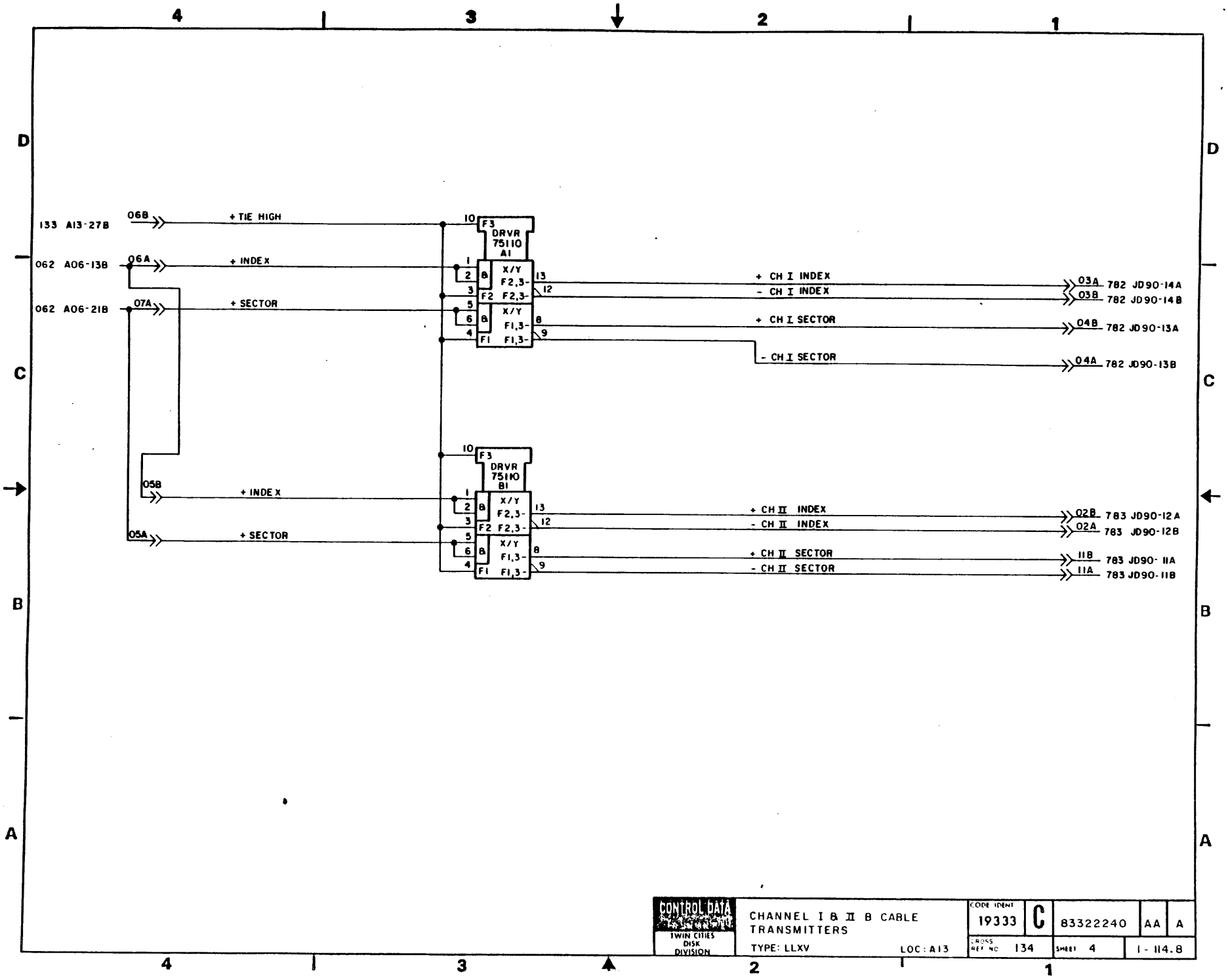

CONTROL DATA
TWIN CITIES DISK DIVISION

CHANNEL I & II B CABLE TRANSMITTERS

TYPE: LLXV LOC: A13

CODE IDENT				
19333	C	83322240	AA	A
CROSS REF NO 134		SHEET 4		1-114.8

REVISIONS					
REV	ECO	DESCRIPTION	DRFT	DATE	CHK'D
A	PE23000	RELEASED	MLA		
B	PE48296	CORRECT DIAGRAMS	SB	11-2-76	
C	PE48402	CORR DIA			
D	PE48523	CORR DIA	DM	7-25-77	
E	PE48675	ERR CORR	DM	1-25-78	
F	PE55069	REPLACE CHIP	TH	7-27-79	
G	PE55654	DOWN GRADE 80MB TO 40MB	TH	9-16-79	
H	PE55992	ADD SECTOR AND INDEX ON A AND B CABLE	CB	2-6-80	
J	PE60290	REDESIGN HFRV	MF	11-5-80	
K	PE60309	CHG I.C. FAMILIES	MJ	6-1-83	
L	DJ22000	XFER FROM PE	MJ	6-1-83	
M	DJ00377	CHG RESISTOR VALUE	MJ	6-1-83	
N	DJ00761	CHANGE FLTV COMP AY	MR	1-30-85	

UNUSED LOGIC ELEMENT

TYPE	LOCATION	OUTPUT PIN (S)
146	B4	12

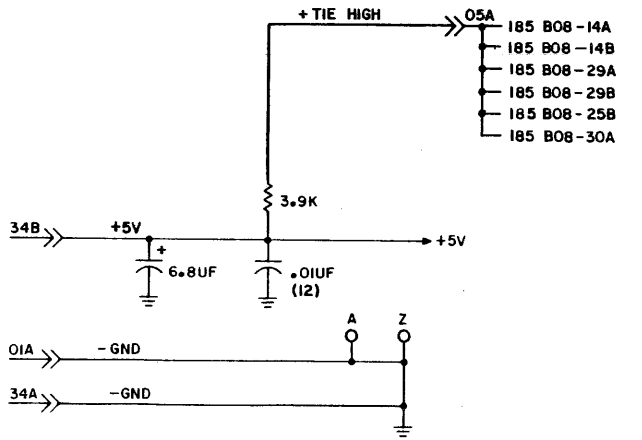

SECTOR SWITCHES

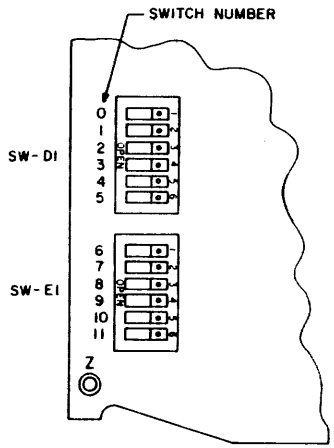

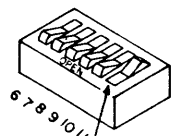

SWITCH 11 SHOWN IN OPEN POSITION

SWITCH POSITIONING

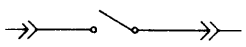

(OPEN POSITION) SWITCH CONVENTION

NOTE

1. REFER TO SECTION 1 OF MAINTENANCE MANUAL FOR INFORMATION ON HOW TO SELECT DIFFERENT SECTOR COUNTS.

APPLICABLE TO BK5XX = 9762

DRAWN	M Anderson	20 76	CONTROL DATA TWIN CITIES DISK DIVISION	ACCESS CONTROL AND INDEX / SECTOR DECODE DIAGRAMS	CODE IDENT 19333	C	83322240	AA	N
CHECKED									
ENGINEER					CROSS REF NO 181		SHEET 1 of 5	PAGE 1-115	
APPROVED				TYPE: FLTV LOC A2B06					

REF 83214818

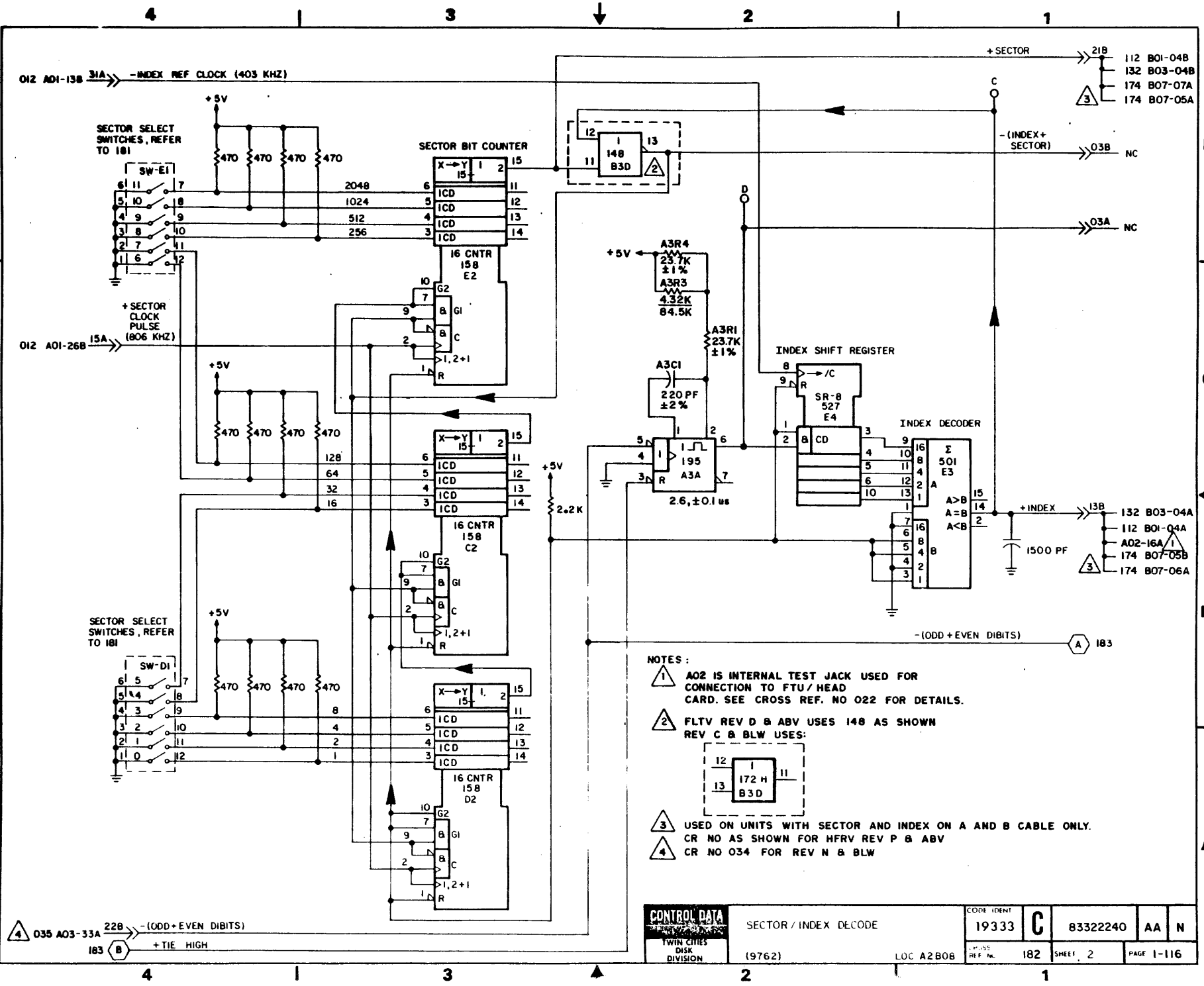
012 A01-13B 31A -INDEX REF CLOCK (403 KHZ)
+5V
SECTOR SELECT SWITCHES, REFER TO 181
SW-E1
470 470 470 470
2048
1024
512
256
SECTOR BIT COUNTER
16 CNTR 158 E2
+SECTOR CLOCK PULSE (806 KHZ)
012 A01-26B 15A
128
64
32
16
16 CNTR 158 C2
SECTOR SELECT SWITCHES, REFER TO 181
SW-D1
8
4
2
1
16 CNTR 158 D2
4 035 A03-33A 22B -(ODD+EVEN DIBITS)
183 B +TIE HIGH
+SECTOR
21B
112 B01-04B
132 B03-04B
174 B07-07A
174 B07-05A
-(INDEX+ SECTOR)
03B NC
03A NC
148 B3D
A3R4 23.7K ±1%
A3R3 4.32K 84.5K
A3R1 23.7K ±1%
A3C1 220 PF ±2%
195 A3A
2.6, ±0.1 us
2.2K
INDEX SHIFT REGISTER
SR-8 527 E4
INDEX DECODER
Σ 501 E3
A>B
A=B
A<B
+INDEX
13B
132 B03-04A
112 B01-04A
A02-16A
174 B07-05B
174 B07-06A
1500 PF
-(ODD+EVEN DIBITS)
A 183
NOTES :
1 A02 IS INTERNAL TEST JACK USED FOR CONNECTION TO FTU/HEAD CARD. SEE CROSS REF. NO 022 FOR DETAILS.
2 FLTV REV D & ABV USES 148 AS SHOWN
REV C & BLW USES:
172 H B3D
3 USED ON UNITS WITH SECTOR AND INDEX ON A AND B CABLE ONLY.
4 CR NO AS SHOWN FOR HFRV REV P & ABV
CR NO 034 FOR REV N & BLW
CONTROL DATA
TWIN CITIES DISK DIVISION
SECTOR / INDEX DECODE
(9762)
LOC A2B08
CODE IDENT 19333
C
83322240
AA
N
CROSS REF NO. 182
SHEET 2
PAGE 1-116

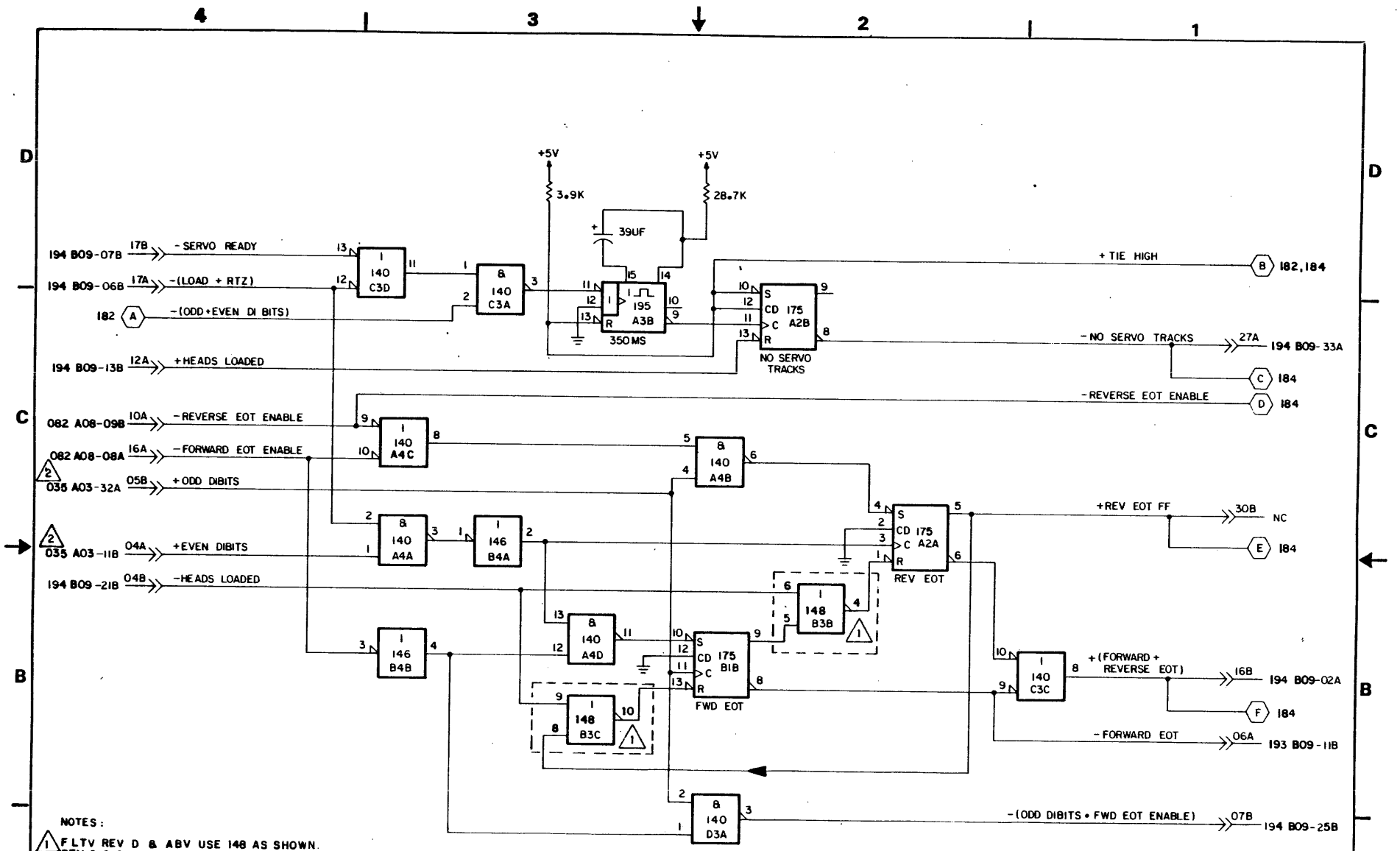

CONTROL DATA NORMANDALE DIVISION	FORWARD AND REVERSE EOT (9762) LOC A2B08	CODE IDENT 19333	C	83322240	Y	K
		CROSS REF NO: 183	SHEET 3	PAGE 1-117		

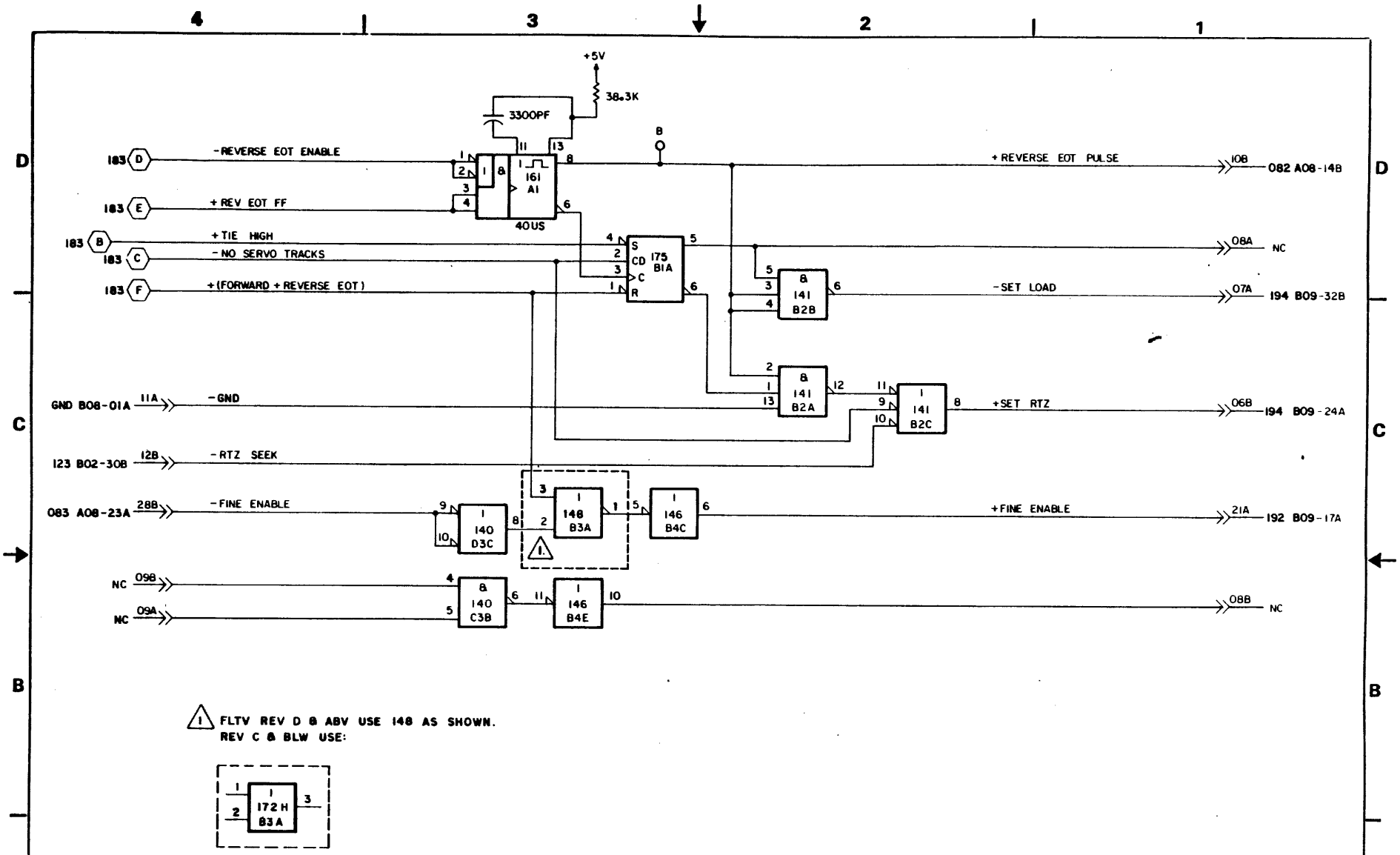

CONTROL DATA CORPORATION TWIN CITIES DISK DIVISION	REVERSE EOT PULSE	CODE IDENT 19333	C	83322240	AA	K
	• (9762) LOC A2B08	SHEET 184	SHEET 4	PAGE 1-118		

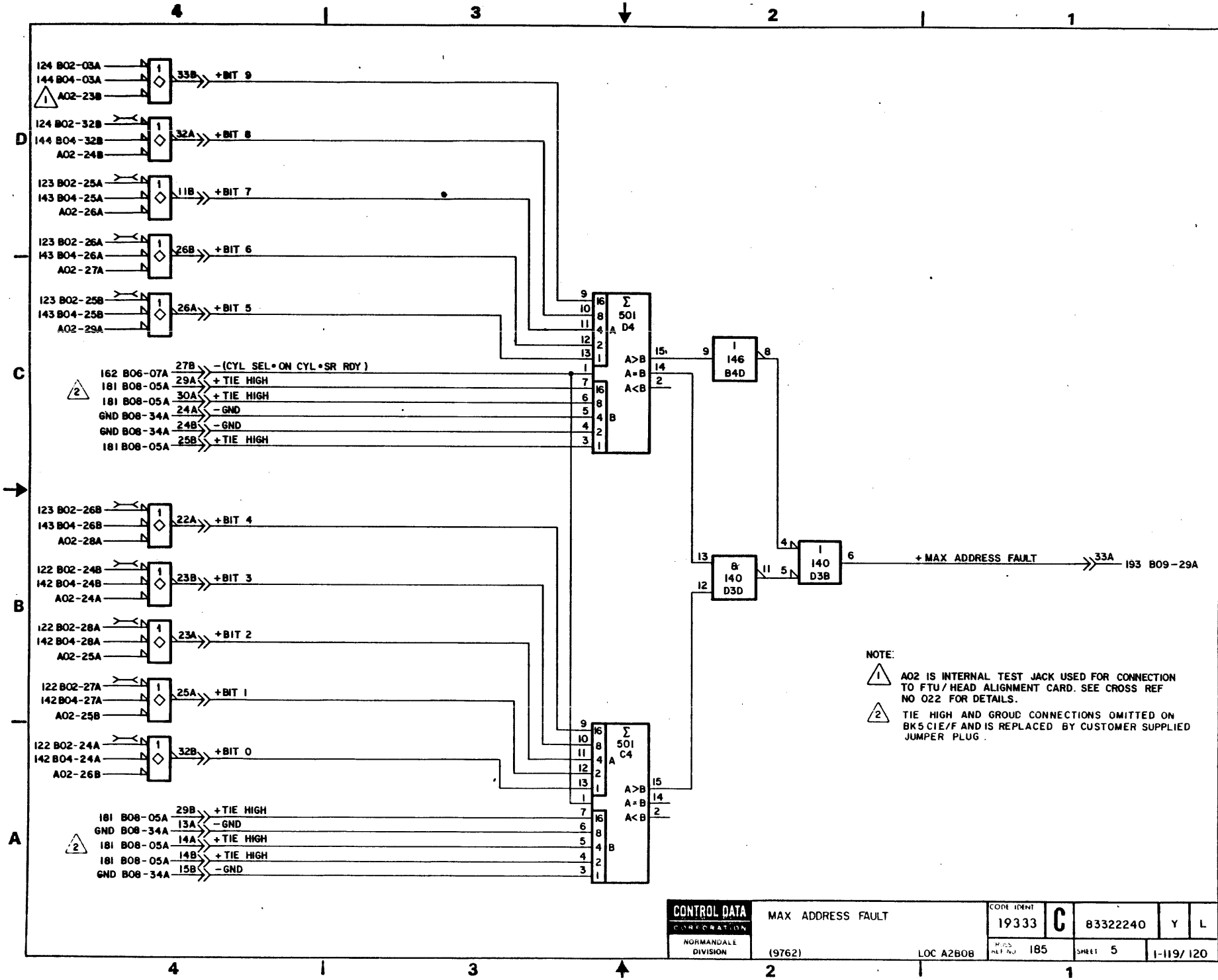
124 B02-03A
144 B04-03A
A02-23B
33B
+BIT 9
124 B02-32B
144 B04-32B
A02-24B
32A
+BIT 8
123 B02-25A
143 B04-25A
A02-26A
11B
+BIT 7
123 B02-26A
143 B04-26A
A02-27A
26B
+BIT 6
123 B02-25B
143 B04-25B
A02-29A
26A
+BIT 5
162 B06-07A
181 B08-05A
181 B08-05A
GND B08-34A
GND B08-34A
181 B08-05A
27B
29A
30A
24A
24B
25B
-(CYL SEL•ON CYL•SR RDY)
+TIE HIGH
+TIE HIGH
-GND
-GND
+TIE HIGH
123 B02-26B
143 B04-26B
A02-28A
22A
+BIT 4
122 B02-24B
142 B04-24B
A02-24A
23B
+BIT 3
122 B02-28A
142 B04-28A
A02-25A
23A
+BIT 2
122 B02-27A
142 B04-27A
A02-25B
25A
+BIT 1
122 B02-24A
142 B04-24A
A02-26B
32B
+BIT 0
181 B08-05A
GND B08-34A
181 B08-05A
181 B08-05A
GND B08-34A
29B
13A
14A
14B
15B
+TIE HIGH
-GND
+TIE HIGH
+TIE HIGH
-GND
Σ 501 D4
A
B
A>B
A=B
A<B
Σ 501 C4
A
B
A>B
A=B
A<B
1 146 B4D
& 140 D3D
1 140 D3B
+MAX ADDRESS FAULT
33A
193 B09-29A
NOTE:
1 A02 IS INTERNAL TEST JACK USED FOR CONNECTION TO FTU/HEAD ALIGNMENT CARD. SEE CROSS REF NO 022 FOR DETAILS.
2 TIE HIGH AND GROUD CONNECTIONS OMITTED ON BK5 C1E/F AND IS REPLACED BY CUSTOMER SUPPLIED JUMPER PLUG.
CONTROL DATA CORPORATION
NORMANDALE DIVISION
MAX ADDRESS FAULT
(9762)
LOC A2B08
CODE IDENT 19333
C
83322240
Y
L
REV NO 185
SHEET 5
1-119/120

REVISIONS					
REV	ECO.	DESCRIPTION	DRFT.	DATE	CHK'D
A	PE23000	RELEASED			
B	PE48296	CORRECT DIAGRAMS	SB	11-2-76	
C	PE22838	CORR DIA			
D	PE48402	CORRECT SIGNAL NAME	A.A.O	6-15-78	
E	PE55854	DOWN GRADE BOMB TO 40MB	TH	9-18-79	
F	PE60290	REDESIGN MFRV	MF	11-5-80	
G	PE60342	CHG IC FAMILIES	MF	7-13-81	
H	PE60493	TIMING RES CHG	MJ	5-26-83	
J	DJ00089	CHG ONE-SHOT	MJ	5-26-83	
K	DJ22000	XFR FRM PE	JG	72584	
L	DJ00666	MLVV -FINE SIGNAL	JG	72584	
	DJ72000A	FORMAT CHG			

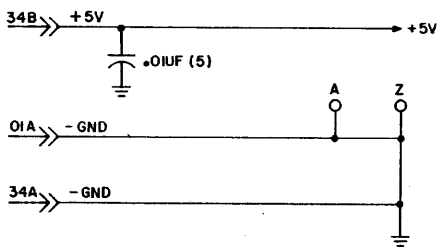

APPLICABLE TO BK5XX=9762

DRAWN	G RABINE	8/24/76	CONTROL DATA CORPORATION	ACCESS CONTROL NO. 1 DIAGRAMS	CODE IDENT 19333	C	83322240	AA	L
CHECKED			TWIN CITIES DISK DIVISION	TYPE MLVV LOC A2B09	CROSS REF NO. 191		SHEET 1 OF 4	PAGE 1-121	
ENGINEER									
APPROVED									

REF 83214819

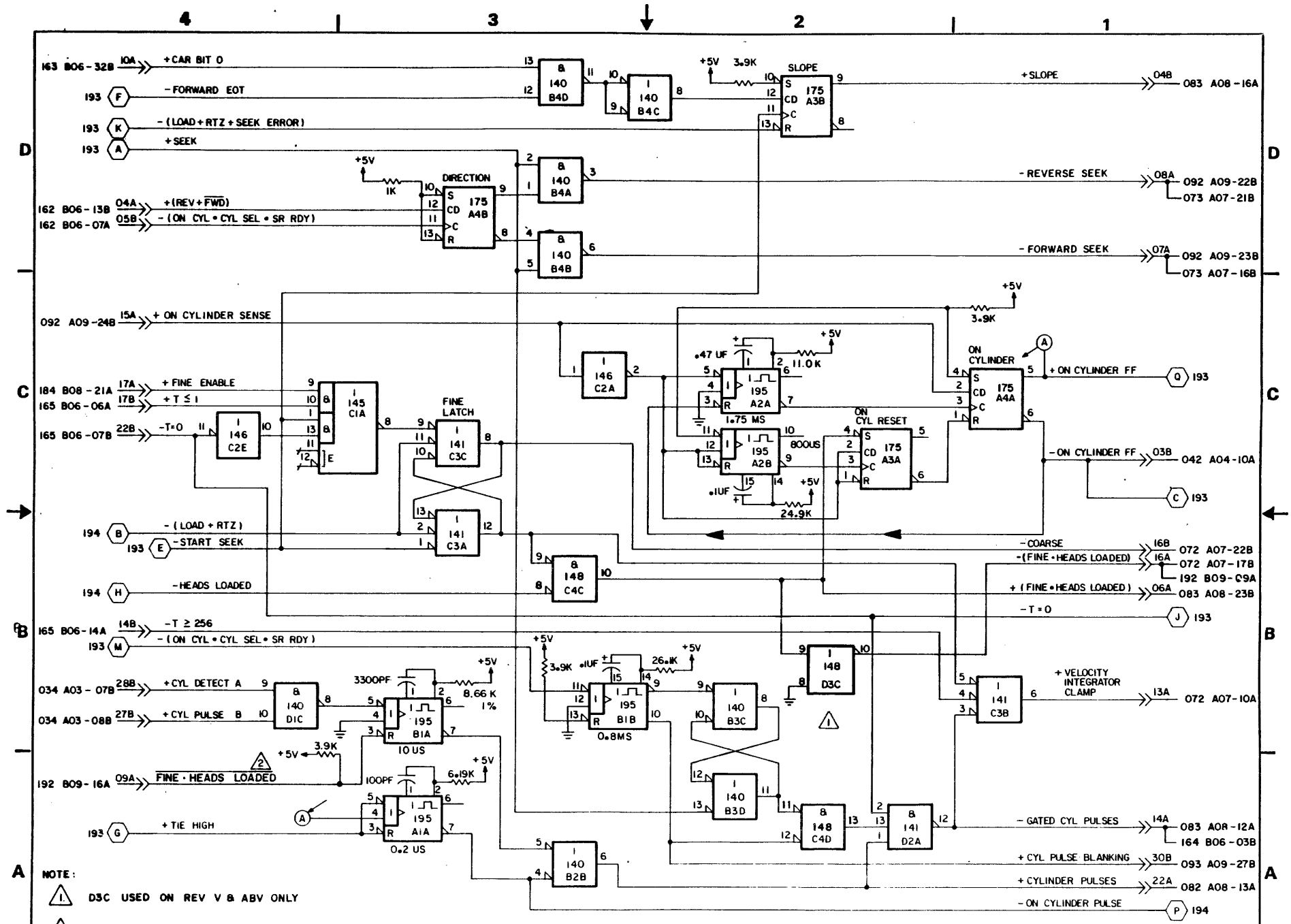
+CAR BIT 0
-FORWARD EOT
-(LOAD+RTZ+SEEK ERROR)
+SEEK
SLOPE
+SLOPE
-REVERSE SEEK
-FORWARD SEEK
DIRECTION
+(REV+FWD)
-(ON CYL•CYL SEL•SR RDY)
+ON CYLINDER SENSE
ON CYLINDER
+ON CYLINDER FF
-ON CYLINDER FF
+FINE ENABLE
+T≤1
-T=0
FINE LATCH
ON CYL RESET
1.75 MS
800US
.1UF
24.9K
-(LOAD+RTZ)
-START SEEK
-HEADS LOADED
-COARSE
-(FINE•HEADS LOADED)
+(FINE•HEADS LOADED)
-T≥256
-(ON CYL•CYL SEL•SR RDY)
+VELOCITY INTEGRATOR CLAMP
+CYL DETECT A
+CYL PULSE B
3300PF
8.66 K 1%
10US
FINE•HEADS LOADED
100PF
6.19K
+TIE HIGH
0.2 US
0.8MS
26.1K
-GATED CYL PULSES
+CYL PULSE BLANKING
+CYLINDER PULSES
-ON CYLINDER PULSE
NOTE:
1. D3C USED ON REV V & ABV ONLY
2. -FINE USED ON OLDER UNITS
CONTROL DATA CORPORATION
TWIN CITIES DISK DIVISION
DIRECTION CONTROL, FINE LATCH ON CYL AND CYL PULSES, (9762)
LOC A2B09
CODE IDENT 19333
C
83322240
AA
L
DRAWING NO. 192
SHEET 2
PAGE 1-122

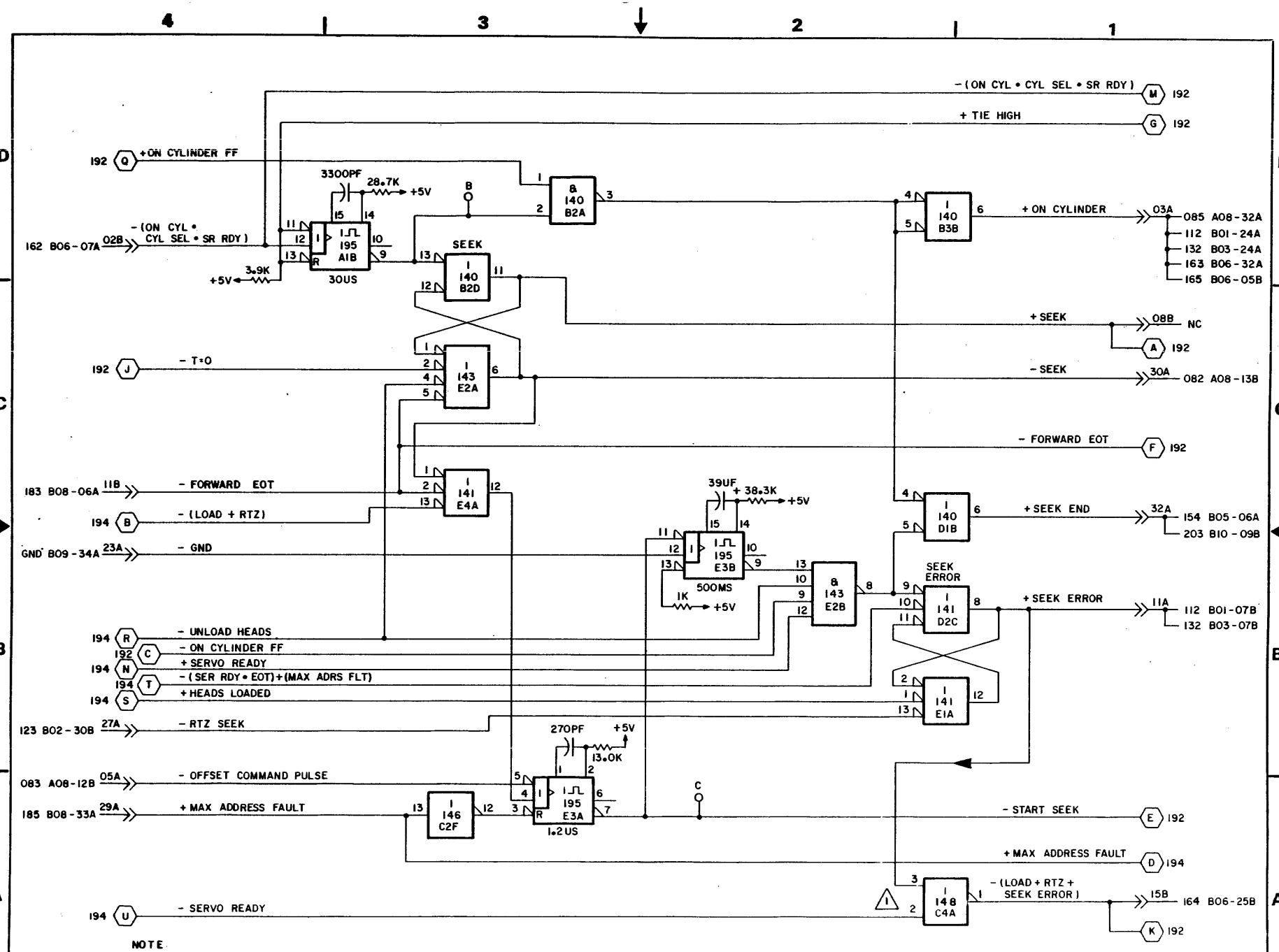
- (ON CYL • CYL SEL • SR RDY)
M 192
+ TIE HIGH
G 192
192 Q +ON CYLINDER FF
3300PF
28.7K
+5V
B
8 140 B2A
- (ON CYL • CYL SEL • SR RDY)
162 B06-07A 02B
I 195 A1B
30US
3.9K
+5V
SEEK
I 140 B2D
I 140 B3B
+ ON CYLINDER
03A
085 A08-32A
112 B01-24A
132 B03-24A
163 B06-32A
165 B06-05B
+ SEEK
08B NC
A 192
192 J - T=0
I 143 E2A
- SEEK
30A
082 A08-13B
- FORWARD EOT
F 192
183 B08-06A 11B - FORWARD EOT
194 B - (LOAD + RTZ)
GND B09-34A 23A - GND
I 141 E4A
39UF
+ 38.3K
+5V
I 195 E3B
500MS
1K
+5V
8 143 E2B
I 140 D1B
+ SEEK END
32A
154 B05-06A
203 B10-09B
SEEK ERROR
I 141 D2C
+ SEEK ERROR
11A
112 B01-07B
132 B03-07B
194 R - UNLOAD HEADS
192 C - ON CYLINDER FF
194 N + SERVO READY
194 T - (SER RDY • EOT)+(MAX ADRS FLT)
194 S + HEADS LOADED
I 141 E1A
123 B02-30B 27A - RTZ SEEK
270PF
+5V
13.0K
083 A08-12B 05A - OFFSET COMMAND PULSE
185 B08-33A 29A + MAX ADDRESS FAULT
I 146 C2F
I 195 E3A
1.2US
C
- START SEEK
E 192
+ MAX ADDRESS FAULT
D 194
1
I 148 C4A
- (LOAD + RTZ + SEEK ERROR)
15B
164 B06-25B
K 192
194 U - SERVO READY
NOTE
1 ELEMENT TYPE 172H USED ON MLVV REV G & BLW.
CONTROL DATA CORPORATION
NORMANDALE DIVISION
SEEK FF AND SEEK ERROR DECTECTION
(9762)
LOC A2B09
CODE IDENT 19333
C
83322240
U
G
CROSS REF NO 193
SHEET 3
PAGE 1-123

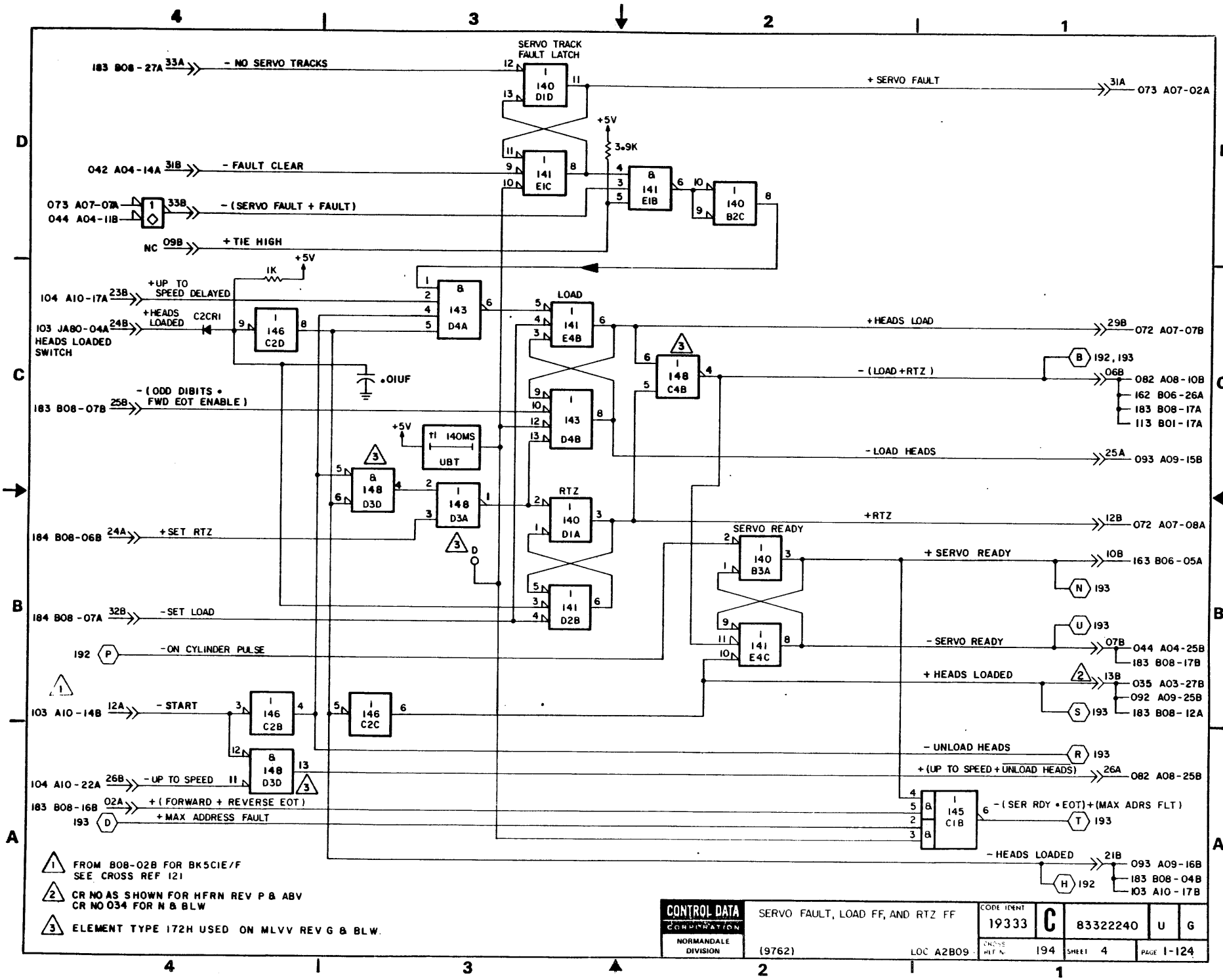
SERVO TRACK FAULT LATCH
183 B08-27A 33A - NO SERVO TRACKS
+ SERVO FAULT
31A 073 A07-02A
042 A04-14A 31B - FAULT CLEAR
073 A07-07A 044 A04-11B 33B - (SERVO FAULT + FAULT)
NC 09B + TIE HIGH
+5V
3.9K
1K
104 A10-17A 23B +UP TO SPEED DELAYED
103 JA80-04A 24B +HEADS LOADED
HEADS LOADED SWITCH
C2CR1
.01UF
183 B08-07B 25B - (ODD DIBITS • FWD EOT ENABLE)
140MS UBT
LOAD
+HEADS LOAD
29B 072 A07-07B
- (LOAD + RTZ)
B 192, 193
06B 082 A08-10B 162 B06-26A 183 B08-17A 113 B01-17A
- LOAD HEADS
25A 093 A09-15B
RTZ
+RTZ
12B 072 A07-08A
184 B08-06B 24A +SET RTZ
SERVO READY
+ SERVO READY
10B 163 B06-05A
N 193
184 B08-07A 32B -SET LOAD
U 193
- SERVO READY
07B 044 A04-25B 183 B08-17B
192 P -ON CYLINDER PULSE
+ HEADS LOADED
13B 035 A03-27B 092 A09-25B 183 B08-12A
S 193
103 A10-14B 12A - START
- UNLOAD HEADS
R 193
+ (UP TO SPEED + UNLOAD HEADS)
26A 082 A08-25B
104 A10-22A 26B - UP TO SPEED
183 B08-16B 02A + (FORWARD + REVERSE EOT)
193 D +MAX ADDRESS FAULT
- (SER RDY • EOT) + (MAX ADRS FLT)
T 193
- HEADS LOADED
21B 093 A09-16B 183 B08-04B 103 A10-17B
H 192
1 FROM B08-02B FOR BK5CIE/F SEE CROSS REF 121
2 CR NO AS SHOWN FOR HFRN REV P & ABV CR NO 034 FOR N & BLW
3 ELEMENT TYPE 172H USED ON MLVV REV G & BLW.
CONTROL DATA CORPORATION
NORMANDALE DIVISION
SERVO FAULT, LOAD FF, AND RTZ FF
(9762)
LOC A2B09
CODE IDENT 19333
C
83322240
U
G
CROSS REF 194
SHEET 4
PAGE 1-124

REVISION STATUS OF SHEETS

1	2	3	4	5	6	7	8	9	10	11	12	13	14	15	16	17	18	19	20
A	A	A																	
B	B	B																	
C	C	B																	
D	C	D																	
E	E	E																	
F	F	F																	

REVISIONS

REV	ECO	DESCRIPTION	DRFT.	DATE	CHK'D
A	PE23000	RELEASED	GR		
B	PE48402	CORRECT DIAGRAMS	WEB	12-17-76	
C	PE48560	W/W CHG	GR	5 10 77	
D	PE48675	ERR CORR	DM	1-25-78	
E		CORRECT SIGNAL NAME	A A O	6 15 78	
F	PE60277	CHG IC FAMILIES	M F	7-13-81	

UNUSED LOGIC ELEMENT

ELEMENT TYPE	LOCATION	OUTPUT PIN(S)
193	E1B	5,12

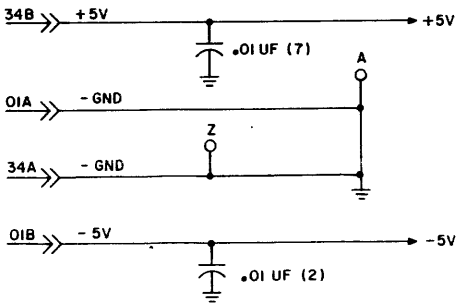

APPLICABLE TO 60 PIN I/O

DRAWN	L. KLEIN	8/21/76	CONTROL DATA CORPORATION	DUAL CHANNEL INTERRUPT AND CH I XMTRS DIAGRAMS	CODE IDENT 19333	C	83322240	U F
CHECKED			NORMANDALE DIVISION	TYPE 6SMV LOC A2B1C	CROSS REF NO. 201	SHEET 1 OF 3	PAGE 1-125	
ENGINEER								
APPROVED								

REF 83214820

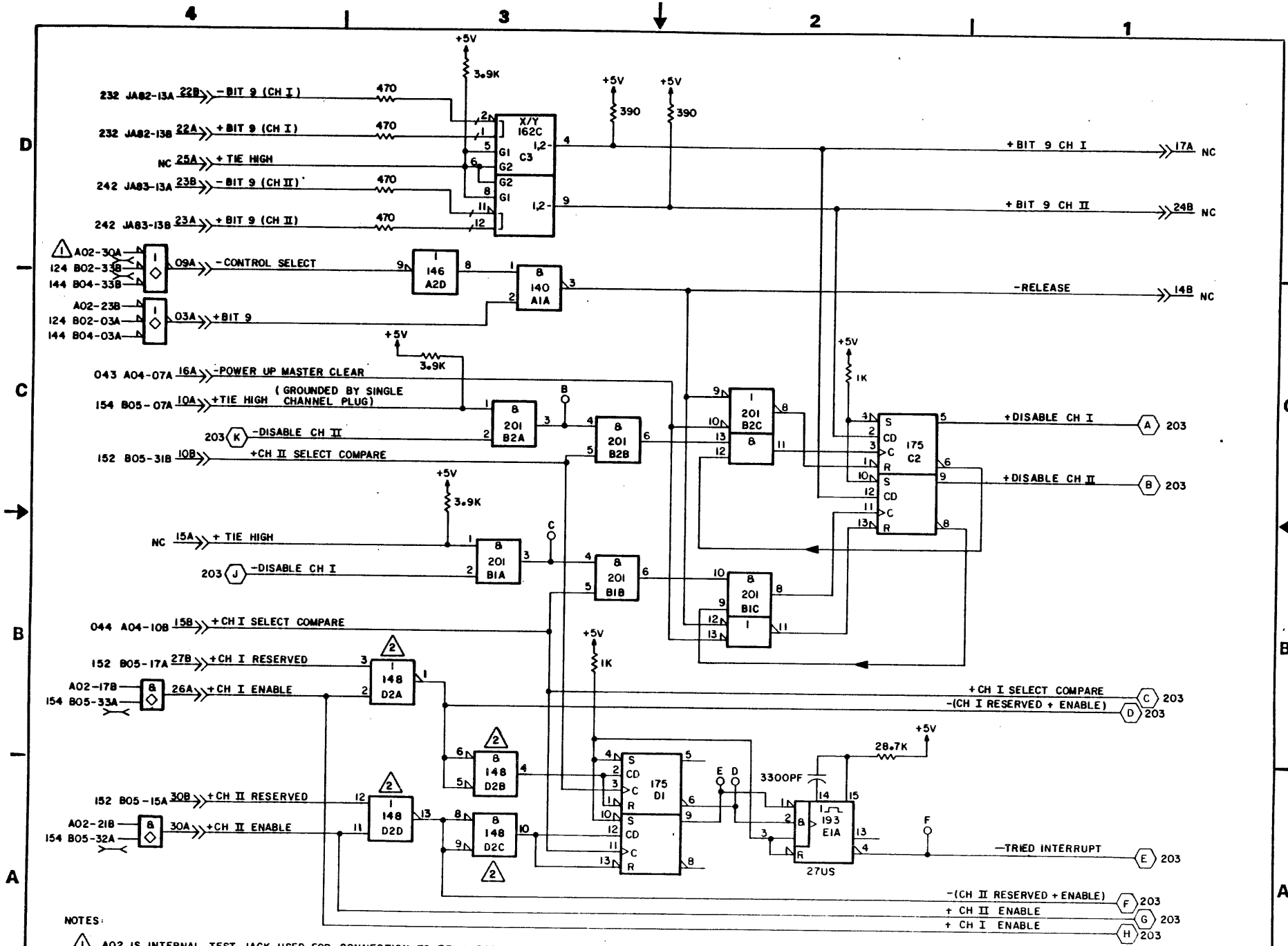

NOTES:

1. A02 IS INTERNAL TEST JACK USED FOR CONNECTION TO FTU/HEAD ALIGNMENT CARD. SEE CROSS REF. NO. 022 FOR DETAILS.
2. ELEMENT TYPE 172H USED ON 6SMV REV C & BLW.

CONTROL DATA CORPORATION
NORMANDALE DIVISION

DUAL CHANNEL INTERRUPTS
(60 PIN I/O) LOC A2B10

CODE IDENT				
19333	C	83322240	U	F
CROSS REF NO. 202	SHEET 2	PAGE 1-126		

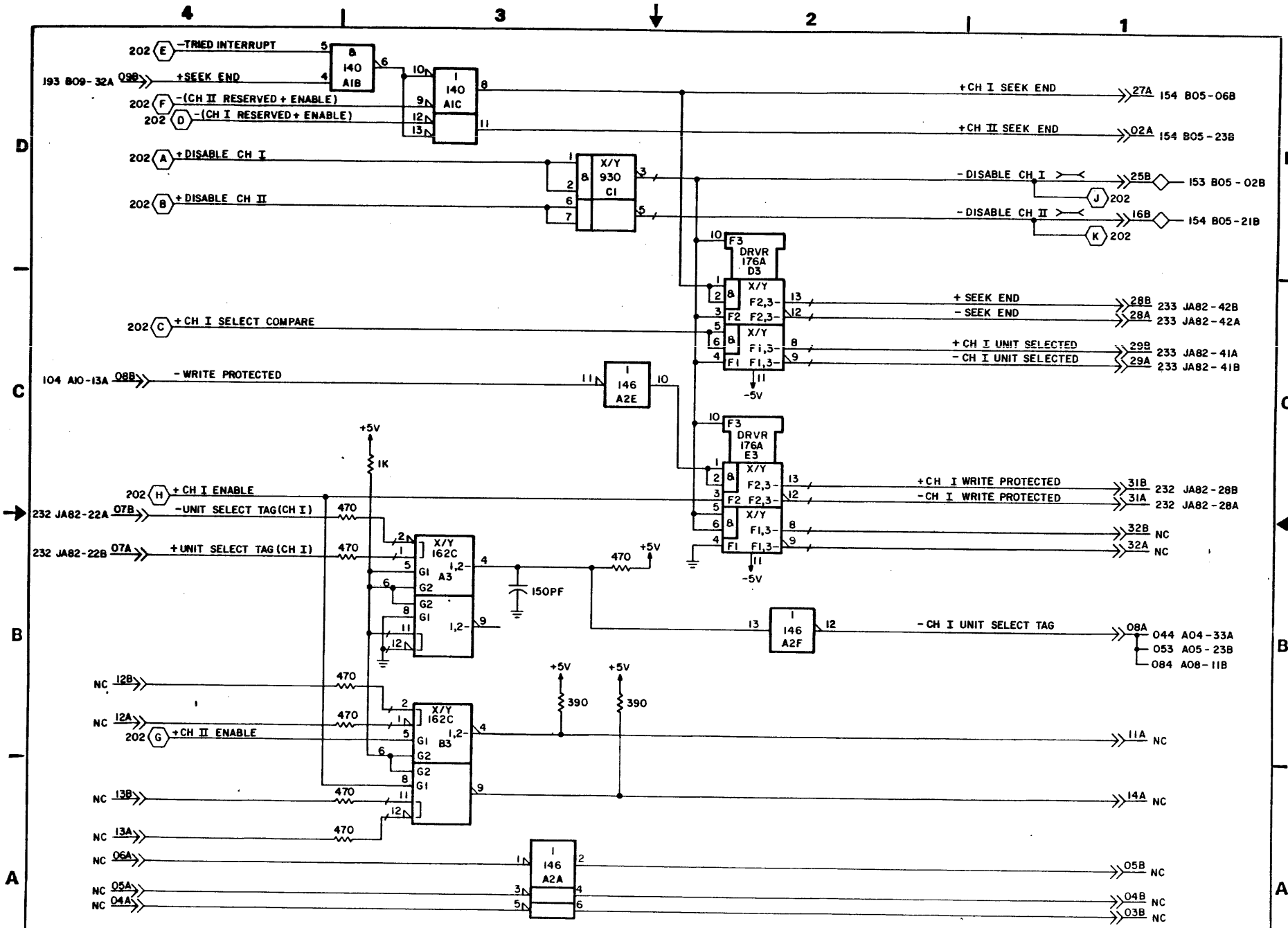
202 E -TRIED INTERRUPT
193 B09-32A 09B +SEEK END
202 F -(CH II RESERVED + ENABLE)
202 D -(CH I RESERVED + ENABLE)
I 140 A1B
I 140 A1C
202 A +DISABLE CH I
202 B +DISABLE CH II
X/Y 930 C1
+CH I SEEK END
+CH II SEEK END
-DISABLE CH I
-DISABLE CH II
J 202
K 202
27A 154 B05-06B
02A 154 B05-23B
25B 153 B05-02B
16B 154 B05-21B
F3 DRVR 176A D3
F3 DRVR 176A E3
X/Y F2,3-
X/Y F1,3-
+SEEK END
-SEEK END
+CH I UNIT SELECTED
-CH I UNIT SELECTED
28B 233 JA82-42B
28A 233 JA82-42A
29B 233 JA82-41A
29A 233 JA82-41B
202 C +CH I SELECT COMPARE
104 A10-13A 08B -WRITE PROTECTED
I 146 A2E
-5V
+5V
1K
202 H +CH I ENABLE
232 JA82-22A 07B -UNIT SELECT TAG(CH I)
232 JA82-22B 07A +UNIT SELECT TAG(CH I)
470
X/Y 162C A3
150PF
+CH I WRITE PROTECTED
-CH I WRITE PROTECTED
31B 232 JA82-28B
31A 232 JA82-28A
32B NC
32A NC
I 146 A2F
-CH I UNIT SELECT TAG
08A 044 A04-33A
053 A05-23B
084 A08-11B
NC 12B
NC 12A
202 G +CH II ENABLE
NC 13B
NC 13A
X/Y 162C B3
390
11A NC
14A NC
NC 06A
NC 05A
NC 04A
I 146 A2A
05B NC
04B NC
03B NC
CONTROL DATA
NORMANDALE DIVISION
SEEK END AND DISABLE CH I UNIT SELECTED AND WRITE PROTECT XMTRS (60 PIN I/O)
LOC A2B10
CODE IDENT 19333
C
83322240
U
F
CROSS REF NO. 203
SHEET 3
PAGE 1-127/128

REVISION STATUS OF SHEETS

1	2	3	4	5	6	7	8	9	10	11	12	13	14	15	16	17	18	19	20
A	A	A	A																

REVISIONS

REV	ECO	DESCRIPTION	DRFT.	DATE	CHK'D
A	DJ00399	VDE NEW CREATE	KKB	11-16-82	[illegible]

UNUSED LOGIC ELEMENT

ELEMENT TYPE	LOCATION	OUTPUT PIN(S)
193	E1B	5,12

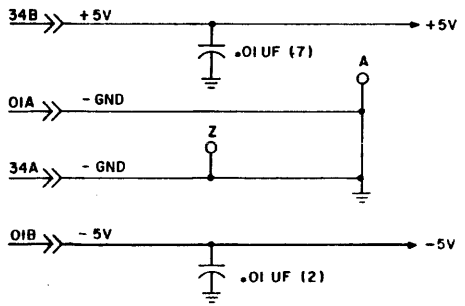

THIS SET USED FOR BK5C6D (60 PIN I/O)

DRAWN	K.BARTSCH	11-16-82	CONTROL DATA SMALL DISK DIVISION	DUAL CHANNEL INTERRUPT AND CH I XMTRS DIAGRAMS "VDE"	CODE IDENT 19333	C	83322240	Z	A
CHECKED									
ENGINEER				TYPE: ESMV LOC A2B10	CROSS REF NO 201		SHEET 1 of 4		1-128.1
APPROVED									

REF 83214868

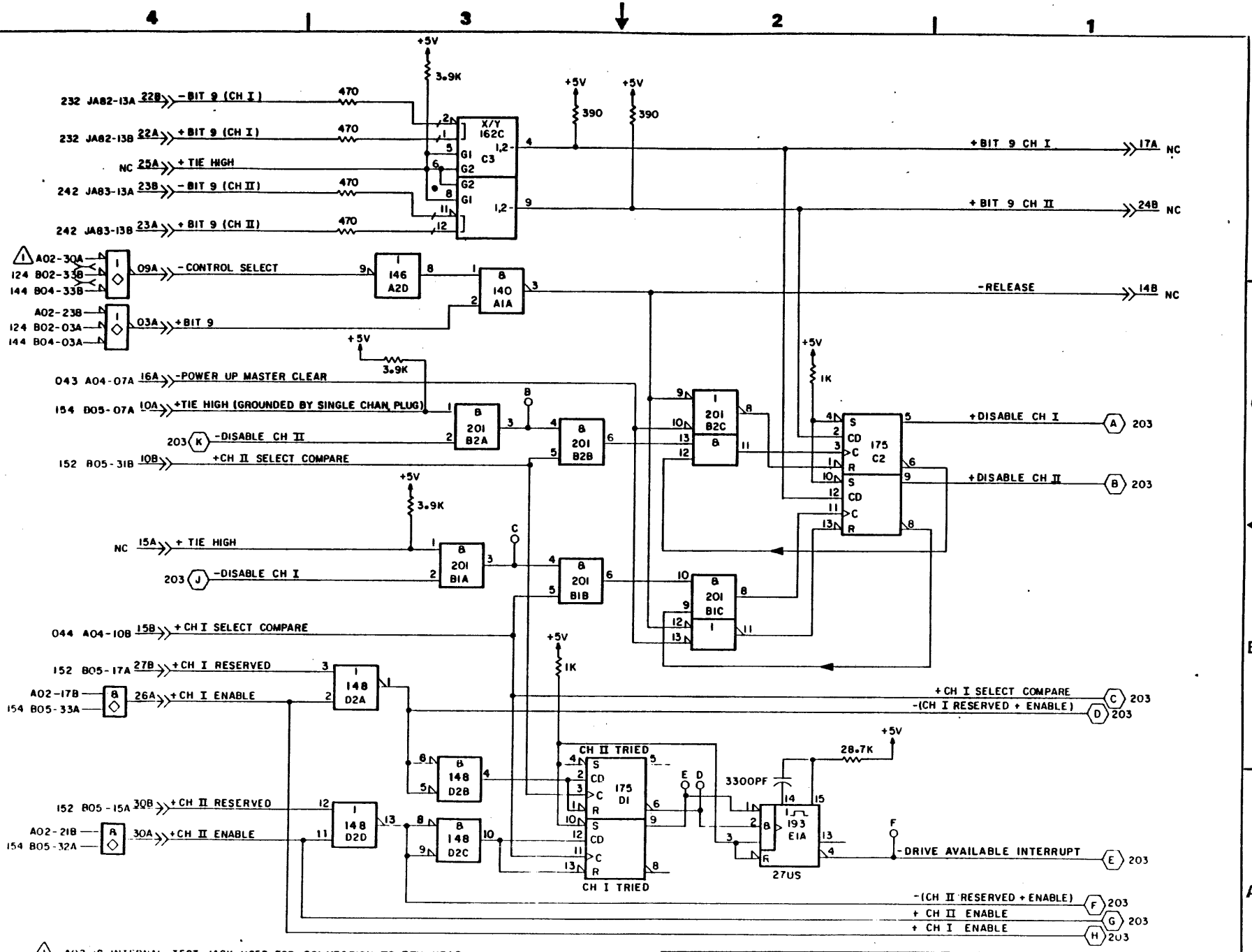
+5V
3.9K
470
232 JA82-13A 22B -BIT 9 (CH I)
232 JA82-13B 22A +BIT 9 (CH I)
NC 25A +TIE HIGH
242 JA83-13A 23B -BIT 9 (CH II)
242 JA83-13B 23A +BIT 9 (CH II)
X/Y 162C C3
390
+BIT 9 CH I
17A NC
+BIT 9 CH II
24B NC
A02-30A 124 B02-33B 144 B04-33B
09A -CONTROL SELECT
146 A2D
140 A1A
-RELEASE
14B NC
A02-23B 124 B02-03A 144 B04-03A
03A +BIT 9
043 A04-07A 16A -POWER UP MASTER CLEAR
154 B05-07A 10A +TIE HIGH (GROUNDED BY SINGLE CHAN PLUG)
203 K -DISABLE CH II
152 B05-31B 10B +CH II SELECT COMPARE
201 B2A
201 B2B
201 B2C
175 C2
1K
+DISABLE CH I
A 203
+DISABLE CH II
B 203
NC 15A + TIE HIGH
203 J -DISABLE CH I
201 B1A
201 B1B
201 B1C
044 A04-10B 15B +CH I SELECT COMPARE
152 B05-17A 27B +CH I RESERVED
A02-17B 154 B05-33A 26A +CH I ENABLE
148 D2A
+CH I SELECT COMPARE
C 203
-(CH I RESERVED + ENABLE)
D 203
148 D2B
CH II TRIED
175 D1
28.7K
3300PF
193 E1A
27US
152 B05-15A 30B +CH II RESERVED
A02-21B 154 B05-32A 30A +CH II ENABLE
148 D2D
148 D2C
CH I TRIED
-DRIVE AVAILABLE INTERRUPT
E 203
-(CH II RESERVED + ENABLE)
F 203
+ CH II ENABLE
G 203
+ CH I ENABLE
H 203
A02 IS INTERNAL TEST JACK USED FOR CONNECTION TO FTU/HEAD ALIGNMENT CARD. SEE CROSS REF. NO. 022 FOR DETAILS.
CONTROL DATA
SMALL DISK DIVISION
DUAL CHANNEL INTERRUPTS
(60 PIN I/O)
LOC ZERO
CODE IDENT 19333
C
83322240
Z
A
CROSS REF NO 202
SHEET 2
PAGE 1-128.2

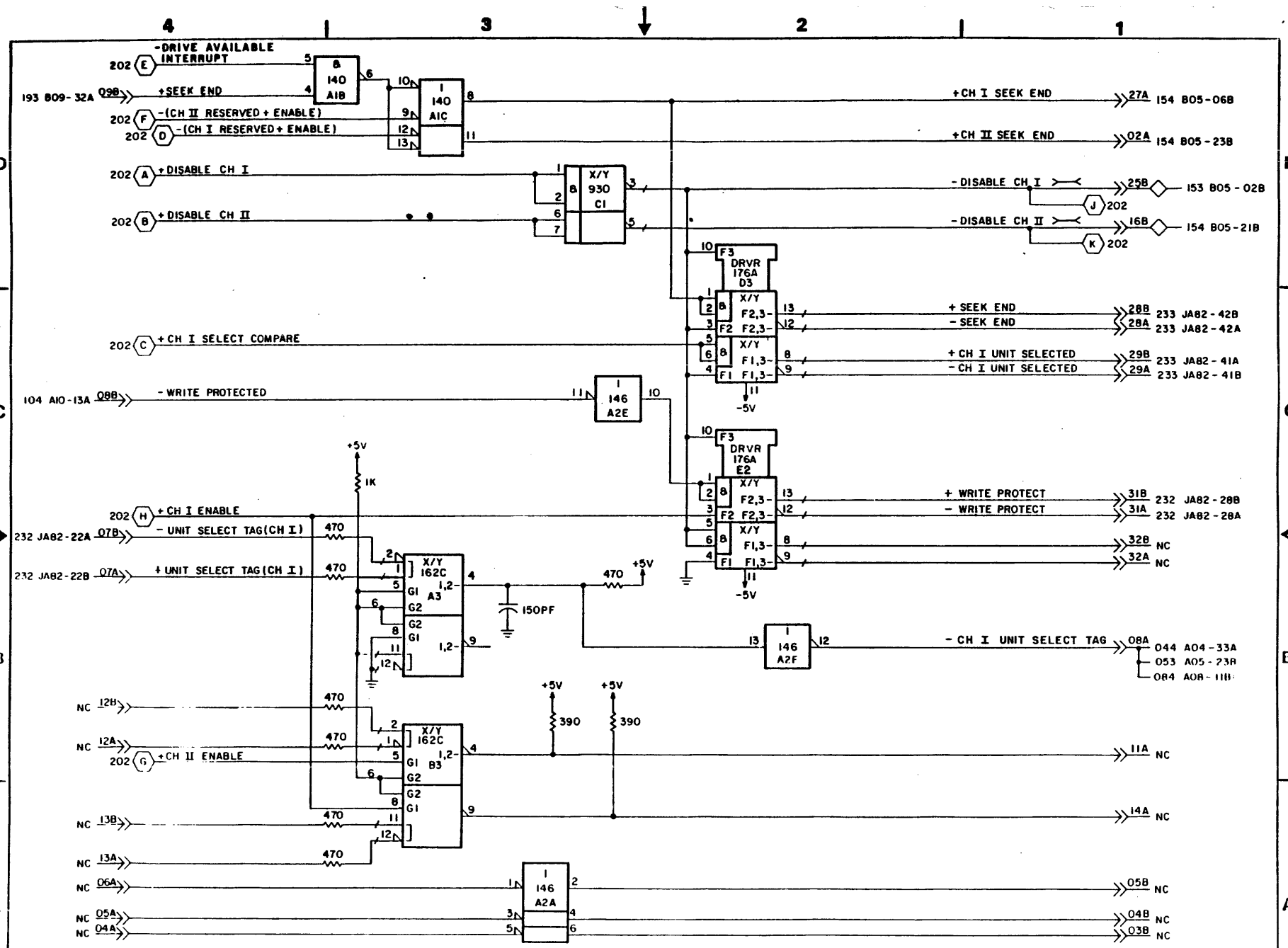

CONTROL DATA SMALL DISK DIVISION

SEEK END AND DISABLE CH I UNIT SELECTED AND WRITE PROTECT XMTRS (60 PIN I/O) LOC A2B10

CODE IDENT 19333 | C | 83322240 | Z | A

CROSS REF NO 203 | SHEET 3 | 1-128.3

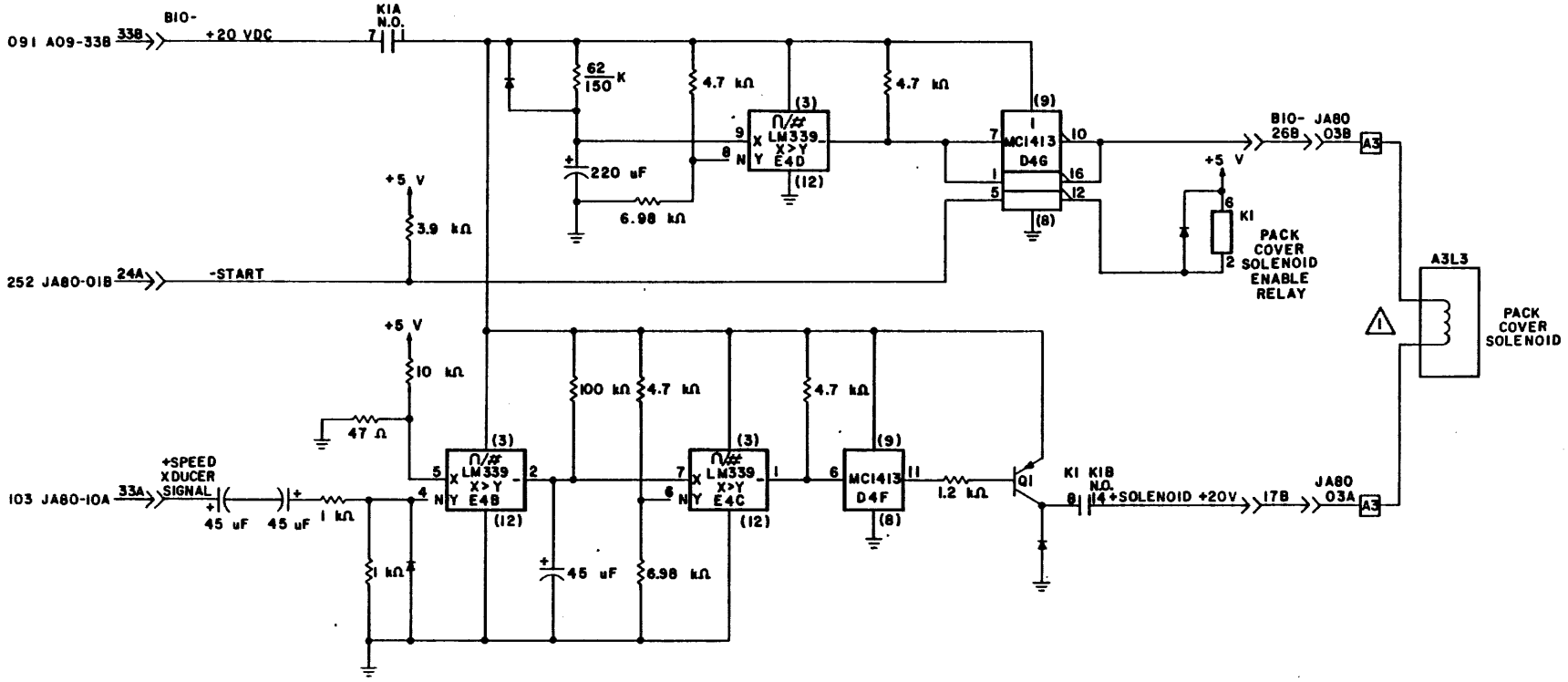

NOTE:
1. REFER TO CROSS REFERENCE NUMBER 343 FOR CABLING INFORMATION.

CONTROL DATA CORPORATION SMALL DISK DIVISION	PACK COVER SOLENOID CONTROL	CODE IDENT 19333	C	83322240	Z	A
	LOC:A2B10	CROSS REF NO 204		SHEET 4	PAGE 1-128.4	

REVISION STATUS OF SHEETS

1	2	3	4	5	6	7	8	9	10	11	12	13	14	15	16	17	18	19	20
A	A	A																	
B	B	B																	
C	C	B																	
D	D	D																	
E	E	D																	
F	F	F																	

REVISIONS

REV.	ECO.	DESCRIPTION	DRFT.	DATE	CHK'D
A	PE23000	RELEASED	GR		
B	PE48402	CORR DIAG			
C	PE48560	W/W CHG	GR	5 10 77	
D	PE48523	CORR DIAG	DM	7-22-77	
E	PE48568	DIAG CORR	DM	7-22-77	
F		CORRECT SIGNAL NAME	A.A.O	6-15-78	

UNUSED LOGIC ELEMENT

ELEMENT TYPE	LOCATION	OUTPUT PIN(S)
193	E18	5,12

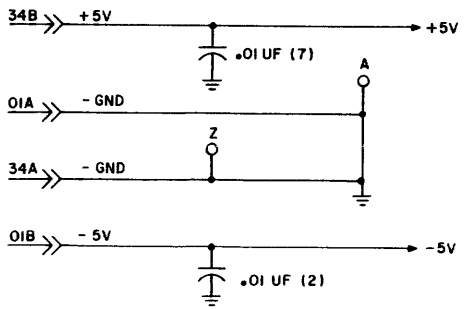

APPLICABLE TO 50 PIN I/O

DRAWN	R. KLEIN	1/29/76	CONTROL DATA CORPORATION	DUAL CHANNEL INTERRUPT AND CH I XMTRS DIAGRAMS	CODE IDENT 19333	C	83322240 K F
CHECKED							
ENGINEER			NORMANDALE DIVISION	TYPE 6SMV LOC A2B10	CROSS REF NO 201	SHEET 1 OF 3	PAGE 1-129
APPROVED							

REF 83214841

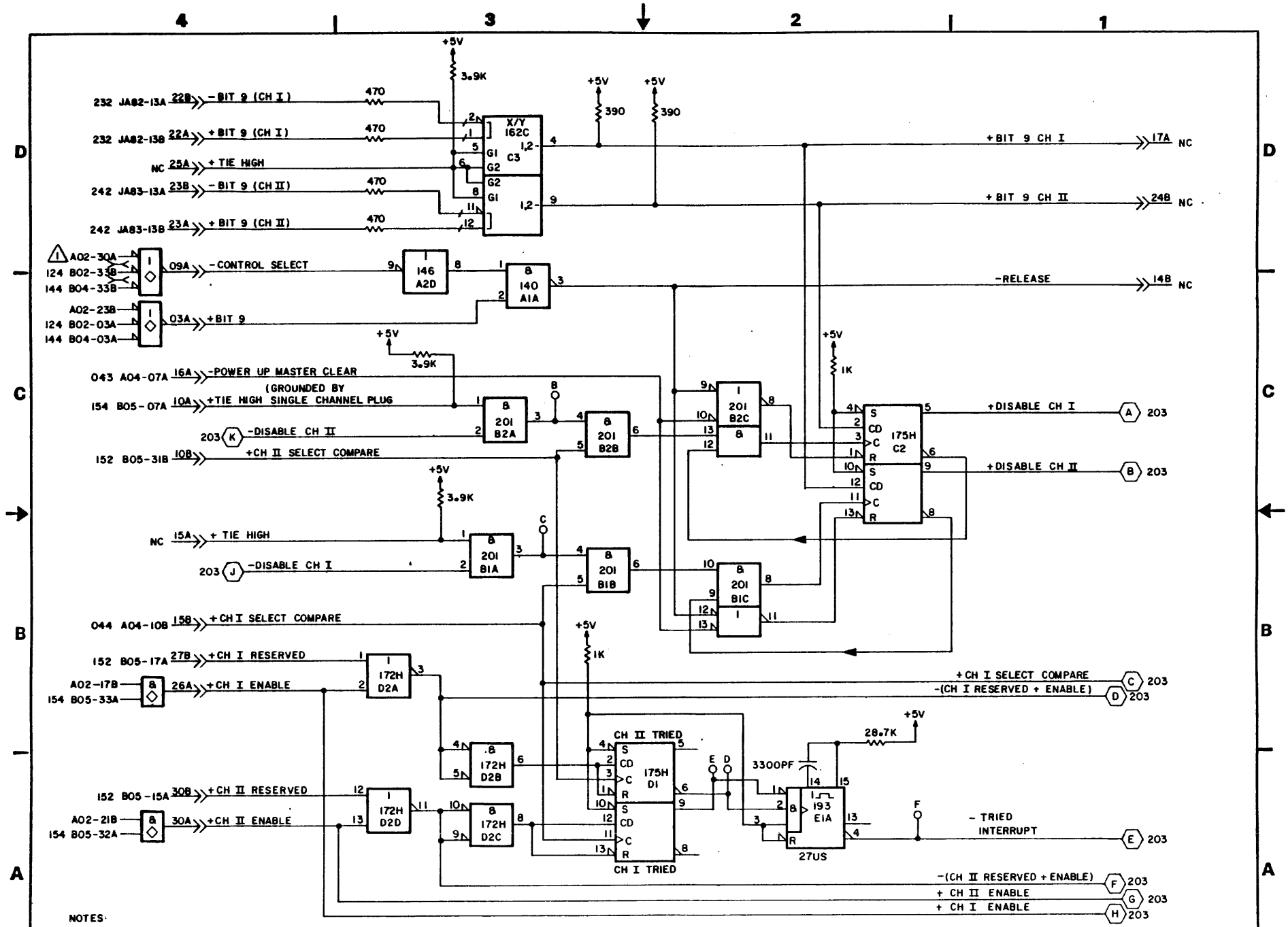

NOTES:

(1) A02 IS INTERNAL TEST JACK USED FOR CONNECTION TO FTU/HEAD ALIGNMENT CARD. SEE CROSS REF. NO. 022 FOR DETAILS.

CONTROL DATA CORPORATION NORMANDALE DIVISION	DUAL CHANNEL INTERRUPTS (50 PIN I/O) LOC A2B10	CODE IDENT 19333	C	833222400	G	F
		CROSS REF NO. 202	SHEET 2	PAGE 1-130		

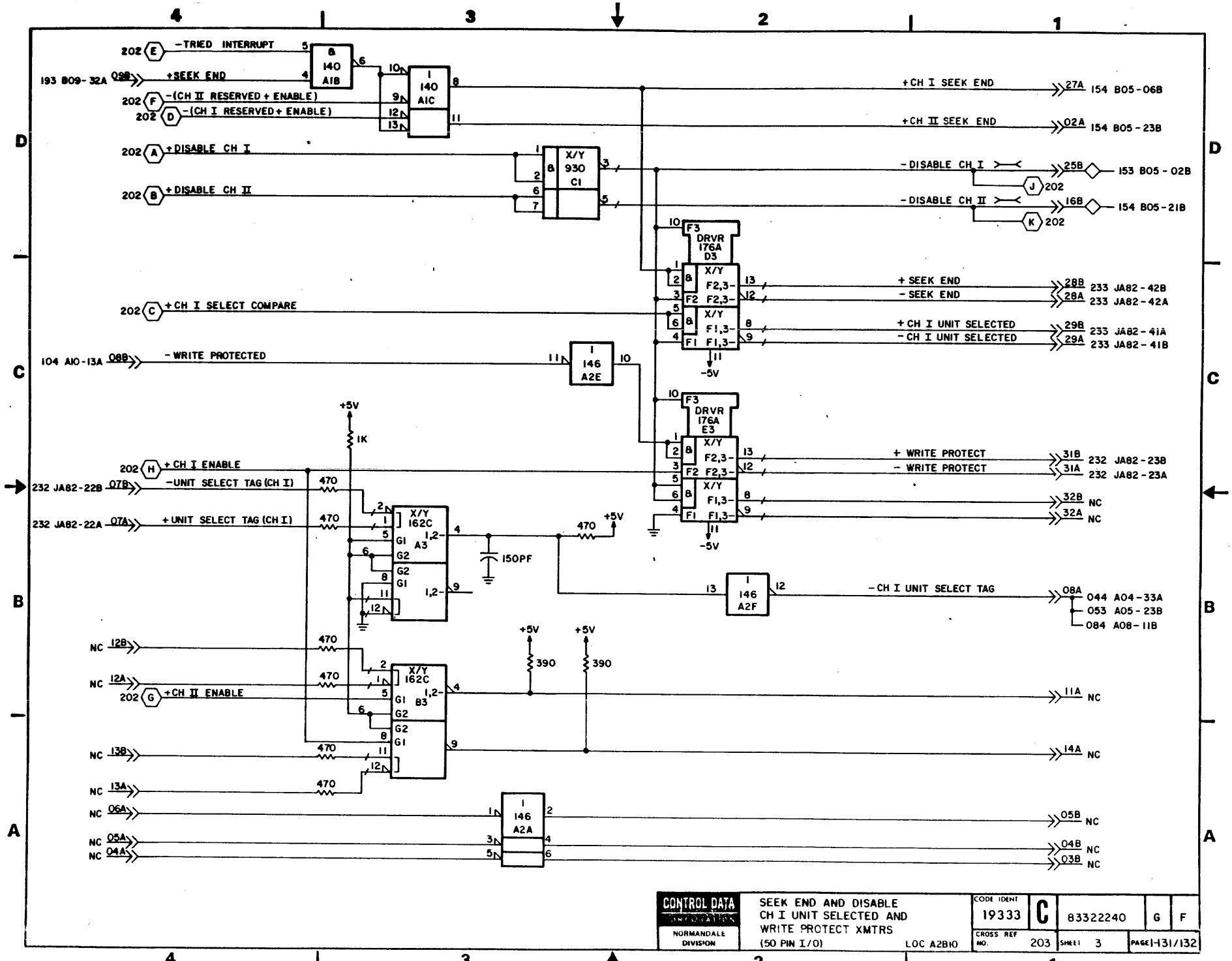

CONTROL DATA CORPORATION NORMANDALE DIVISION	SEEK END AND DISABLE CH I UNIT SELECTED AND WRITE PROTECT XMTRS (50 PIN I/O) LOC A2B10	CODE IDENT 19333	C	83322240	G	F
		CROSS REF NO. 203	SHEET 3	PAGE 1-131/132		

REVISION STATUS OF SHEETS

1	2	3	4	5	6	7	8	9	10	11	12	13	14	15	16	17	18	19	20
A	A																		
B	B																		
C	C																		

REVISIONS

REV.	ECO.	DESCRIPTION	DRFT	DATE	CHK'D
A	PE23000	RELEASED			
B	PE48402	CORRECT DIAGRAMS	WEB	12-17-76	
C	PE55992	ADD GROUNDS	CB	2-6-80	

UNUSED RESISTORS

VALVE	LOCATION	OUTPUT PIN(S)
56	A2	2,4,6
56	C2	3
56	C3	2

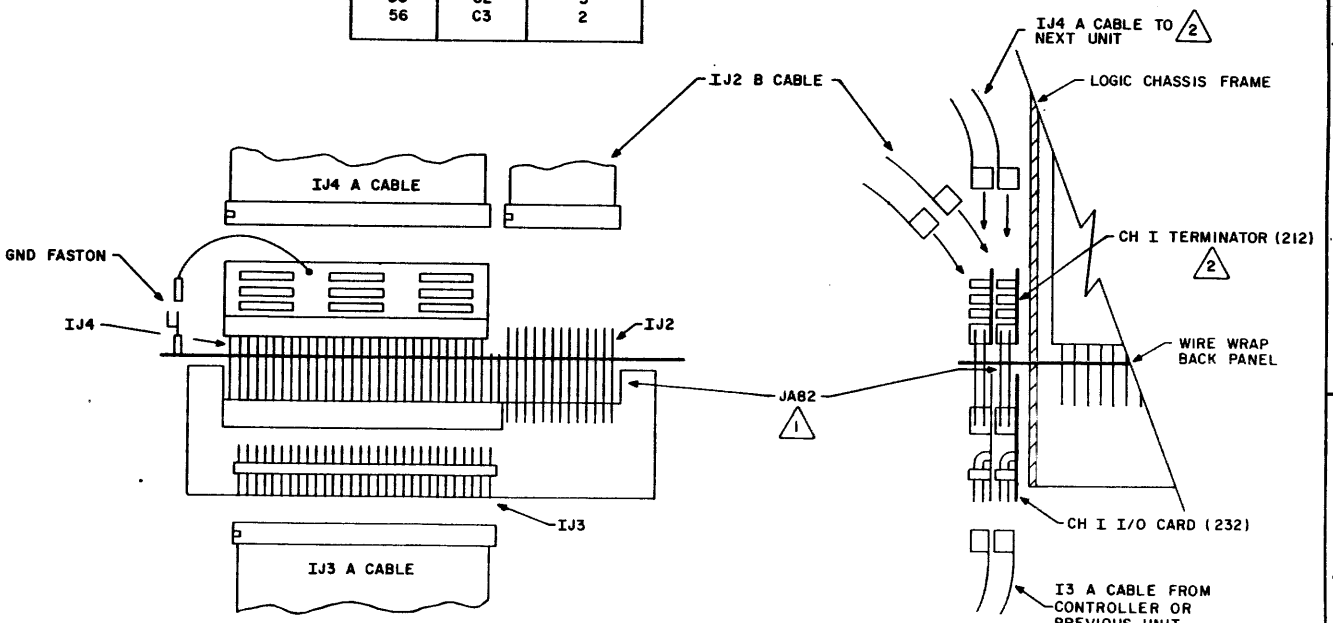

NOTE

1. FEED THROUGH W/W PINS MAKE CONTACT TO BOTH, TERMINATOR AND I/O CARD.
2. TERMINATOR IS REQUIRED IN PLACE OF IJ4 A CABLE ON THE LAST UNIT IN A DAISY CHAIN CONFIGURATION AND ON ALL UNITS IN A STAR CONFIGURATION.

APPLICABLE TO 60 PIN I/O

DRAWN	G. RABINE	9/27/76
CHECKED		
ENGINEER		
APPROVED		

CONTROL DATA CORPORATION
NORMANDALE DIVISION

CHANNEL I TERMINATOR DIAGRAMS

TYPE: AYDV LOC A2C1

CODE IDENT				
19333	C	83322240	P	C
CROSS REF NO. 211	SHEET 1 OF 2	PAGE 1-133		

REF 83214821

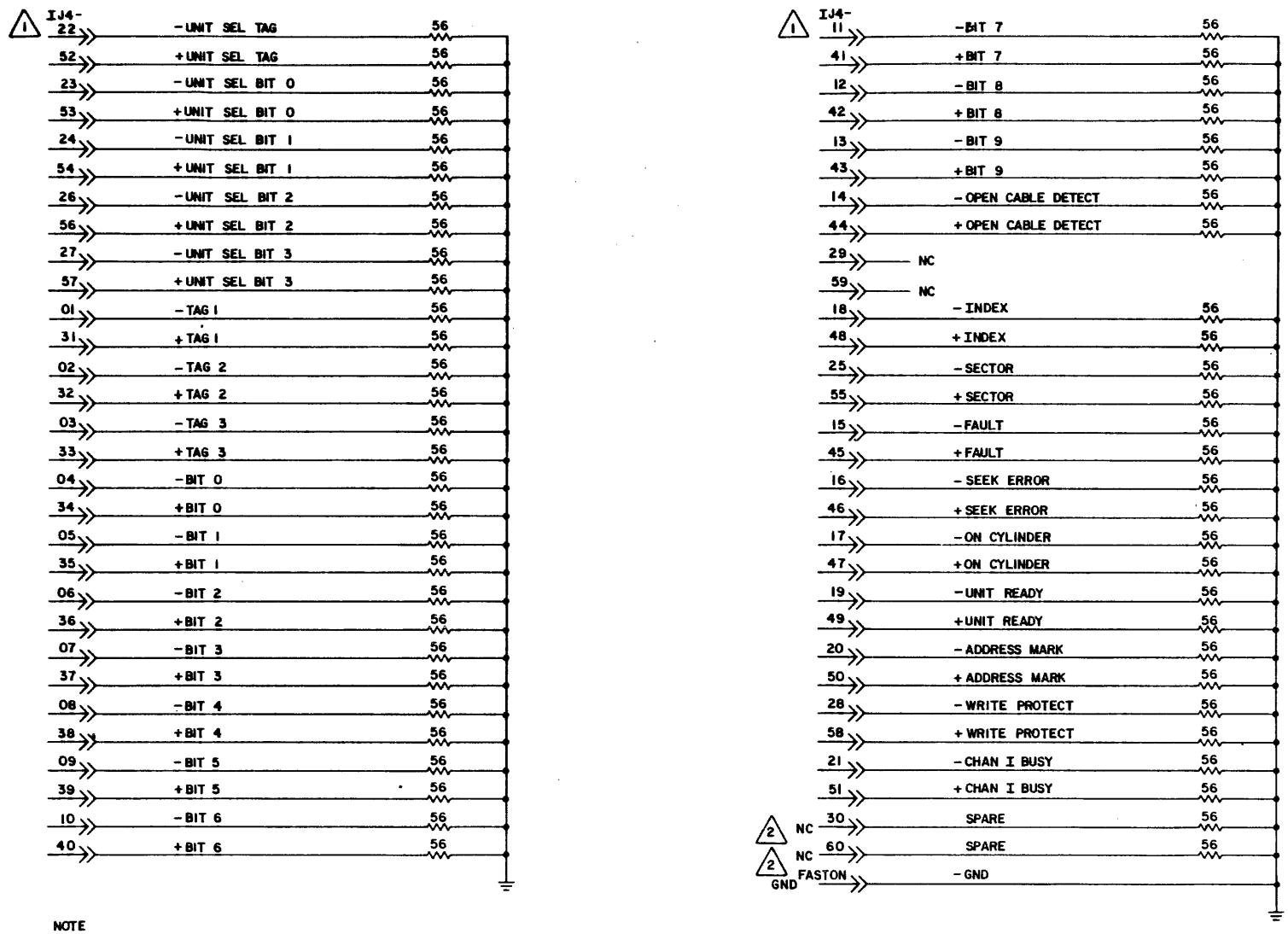

NOTE

1. TERMINATOR IS USED ON All DRIVES IN STAR CABLING CONFIGURATION, AND ON LAST DRIVE IN STRING IN DAISY CHAIN CONFIGURATION. TERMINATOR PIN NUMBERING IS PIN FOR PIN COMPATABLE WITH CONNECTOR J4. SEE CROSS REFERENCE NUMBER 232 FOR DETAILS.

2. NC FOR ALL UNITS EXCEPT BK5C4C/D AND BK5A7V/W, LINES ARE GROUNDED FOR THESE UNITS.

CONTROL DATA CORPORATION NORMANDALE DIVISION	CHANNEL I TERMINATOR (60 PIN I/O) LOC A2C1	CODE IDENT 19333	C	83322240	P	C
		CROSS REF NO 212		SHEET 2	PAGE 1-134	

REVISION STATUS OF SHEETS

1	2	3	4	5	6	7	8	9	10	11	12	13	14	15	16	17	18	19	20
A	A																		
B	B																		

REVISIONS

REV.	ECO.	DESCRIPTION	DRFT	DATE	CHK'D
A	PE23000	RELEASED			
B	PE48402	CORRECT DIAGRAMS	12-17-76		

UNUSED RESISTORS

VALVE	LOCATION	OUTPUT PIN(S)
56	B2	3

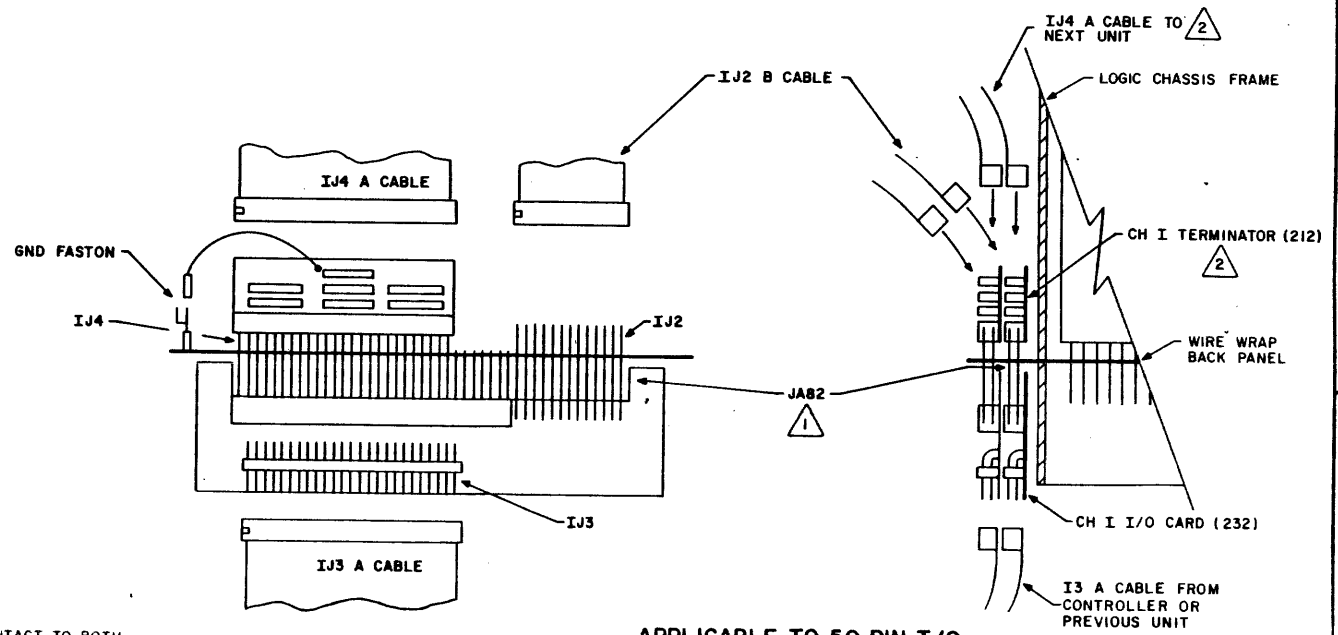

NOTE

1. FEED THROUGH W/W PINS MAKE CONTACT TO BOTH, TERMINATOR AND I/O CARD
2. TERMINATOR IS REQUIRED IN PLACE OF IJ4 A CABLE ON THE LAST UNIT IN A DAISY CHAIN CONFIGURATION AND ON ALL UNITS IN A STAR CONFIGURATION.

APPLICABLE TO 50 PIN I/O

DRAWN	G. Reuse	9/27/76
CHECKED		
ENGINEER		
APPROVED		

CONTROL DATA CORPORATION
NORMANDALE DIVISION

CHANNEL I TERMINATOR DIAGRAMS

TYPE BYDV LOC A2C1

CODE IDENT				
19333	C	83322240	K	B

CROSS REF NO. 211 | SHEET 1 OF 2 | PAGE 1-135

REF 83214842

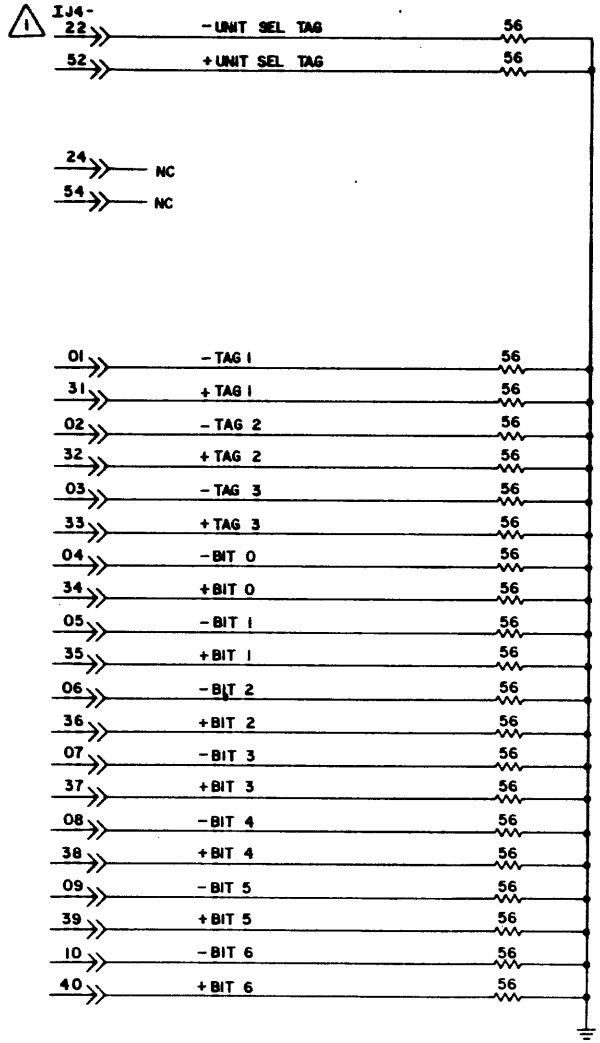

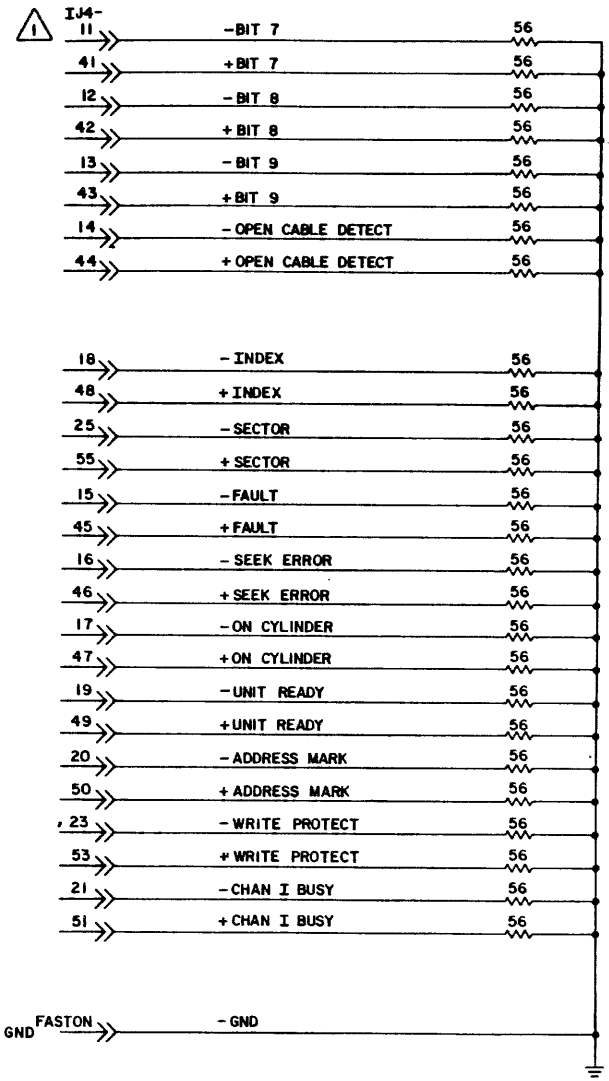

NOTE

1. TERMINATOR IS USED ON All DRIVES IN STAR CABLING CONFIGURATION, AND ON LAST DRIVE IN STRING IN DAISY CHAIN CONFIGURATION. TERMINATOR PIN NUMBERING IS PIN FOR PIN COMPATABLE WITH CONNECTOR J4. SEE CROSS REFERENCE NUMBER 232 FOR DETAILS.

CONTROL DATA CORPORATION NORMANDALE DIVISION	CHANNEL I TERMINATOR (50 PIN I/O) LOC A2C1	CODE IDENT 19333	C	83322240	A	B
		CROSS REF NO. 212		SHEET 2	PAGE 1-136	

REVISION STATUS OF SHEETS

1	2	3	4	5	6	7	8	9	10	11	12	13	14	15	16	17	18	19	20
A	A																		
B	B																		

REVISIONS

REV.	ECO.	DESCRIPTION	DRFT.	DATE	CHK'D
A	PE23000	RELEASED			
B	PE48402	CORR DIAG			

UNUSED RESISTORS

VALVE	LOCATION	OUTPUT PIN(S)
56	A2	2,4,6
56	C2	3
56	C3	2

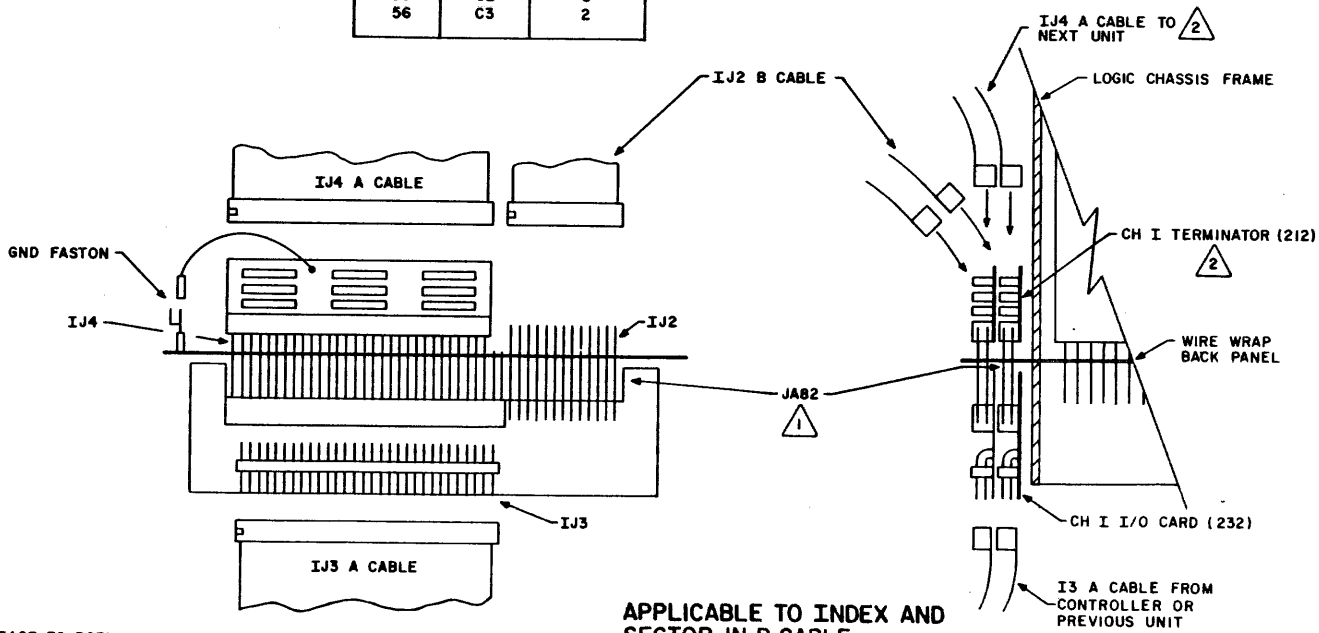

APPLICABLE TO INDEX AND SECTOR IN B CABLE

NOTE:

1. FEED THROUGH W/W PINS MAKE CONTACT TO BOTH, TERMINATOR AND I/O CARD
2. TERMINATOR IS REQUIRED IN PLACE OF IJ4 A CABLE ON THE LAST UNIT IN A DAISY CHAIN CONFIGURATION AND ON ALL UNITS IN A STAR CONFIGURATION.

DRAWN	G. RABINE	9/27/76
CHECKED		
ENGINEER		
APPROVED		

CONTROL DATA CORPORATION
NORMANDALE DIVISION

CHANNEL I TERMINATOR DIAGRAMS

TYPE AYDV LOC A2C1

CODE IDENT				
19333	C	83322240	K	B
CROSS REF NO 211		SHEET 1 OF 2	PAGE 1-137	

REF 83214848

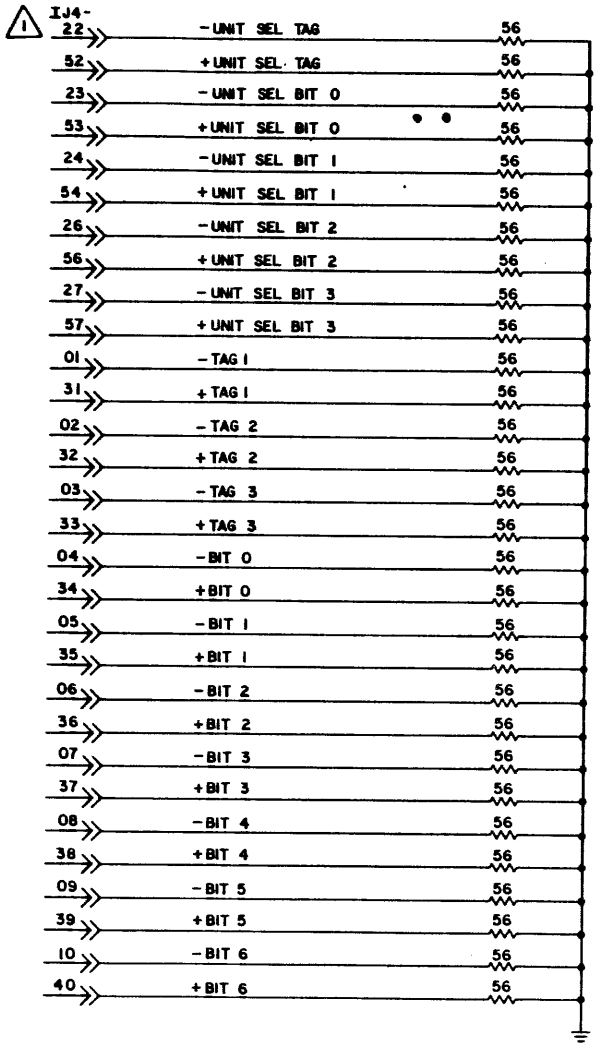

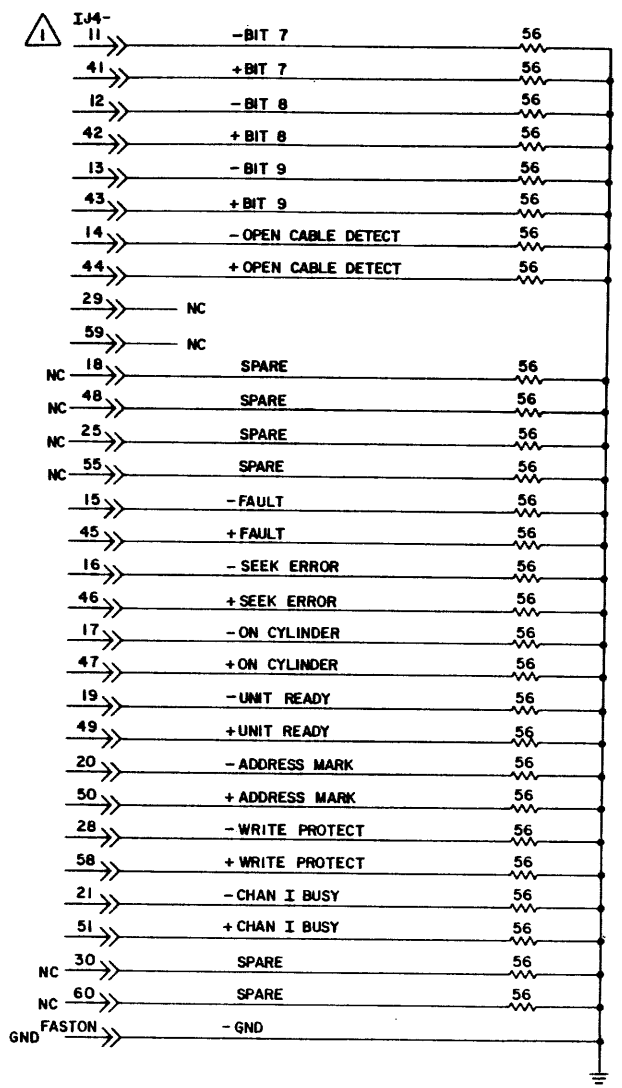

NOTE

1. TERMINATOR IS USED ON All DRIVES IN STAR CABLING CONFIGURATION, AND ON LAST DRIVE IN STRING IN DAISY CHAIN CONFIGURATION. TERMINATOR PIN NUMBERING IS PIN FOR PIN COMPATABLE WITH CONNECTOR J4. SEE CROSS REFERENCE NUMBER 232 FOR DETAILS.

CONTROL DATA CORPORATION NORMANDALE DIVISION	CHANNEL I TERMINATOR (S8IOBC) LOC A2C1	CODE IDENT 19333	C	83322240	A	B
		CROSS REF. 212		SHEET 2	PAGE 1-138	

REVISION STATUS OF SHEETS

1	2	3	4	5	6	7	8	9	10	11	12	13	14	15	16	17	18	19	20
A	A																		
B	B																		
C	C																		

REVISIONS

REV.	ECO.	DESCRIPTION	DRFT.	DATE	CHK'D
A	PE23000	RELEASE			
B	PE48402	CORRECT DIAGRAMS	WEB	1217-76	
C	PE55992	ADD GROUNDS	CB	2-6-80	

UNUSED RESISTORS

VALUE	LOCATION	OUTPUT PIN(S)
56	A2	2,4,6
56	C2	3
56	C3	2

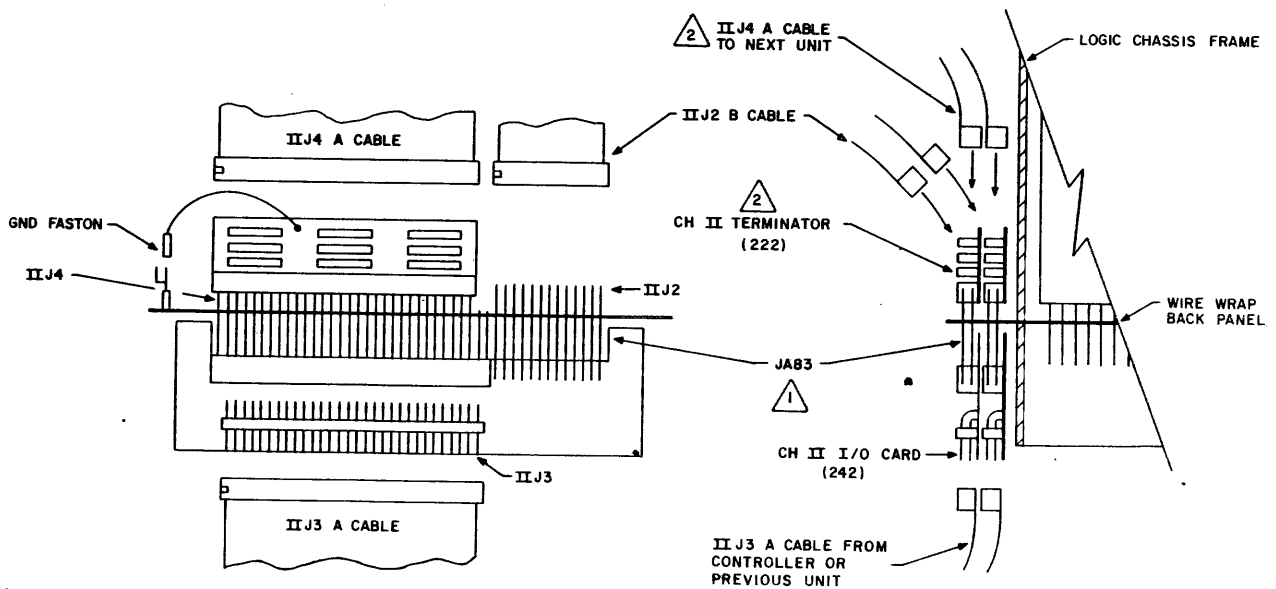

NOTE

1. FEED THROUGH W/W PINS MAKE CONTACT TO BOTH, TERMINATOR AND I/O CARD
2. TERMINATOR IS REQUIRED IN PLACE OF IIJ4 A CABLE ON THE LAST UNIT IN A DAISY CHAIN CONFIGURATION AND ON ALL UNITS IN A STAR CONFIGURATION.

APPLICABLE TO 60 PIN I/O

DRAWN	G. Rabine 9/21/76	CONTROL DATA CORPORATION	CHANNEL II TERMINATOR DIAGRAMS
CHECKED			
ENGINEER		NORMANDALE DIVISION	TYPE AYDV LOC A2C2
APPROVED			

CODE IDENT				
19333	C	83322240	P	C
CROSS REF NO. 221	SHEET 1 OF 2	PAGE 1-139		

1 REF 83214822

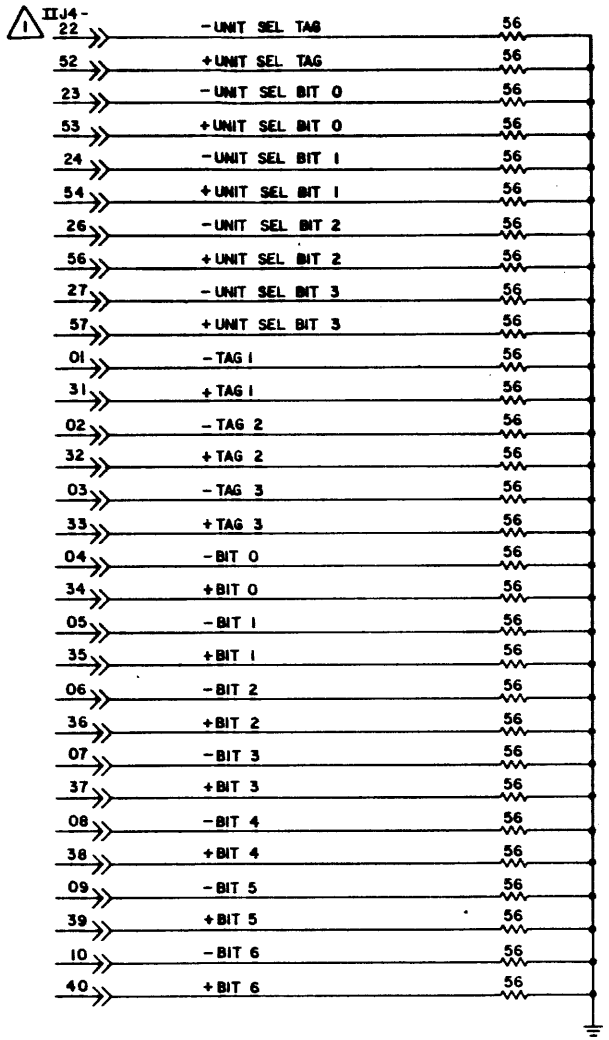

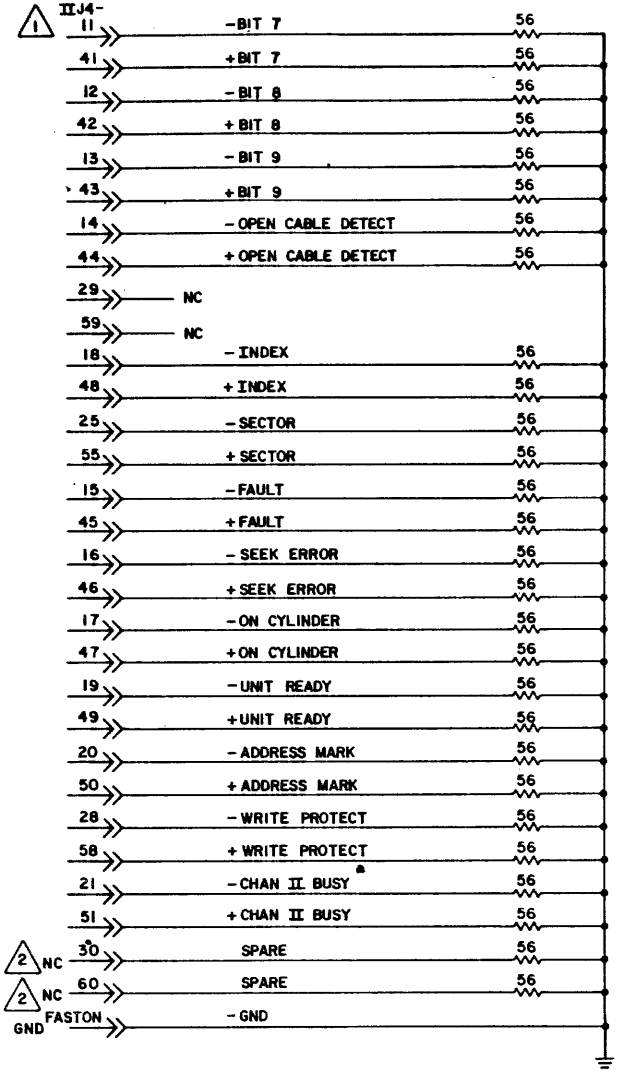

NOTE

1. TERMINATOR IS USED ON All DRIVES IN STAR CABLING CONFIGURATION, AND ON LAST DRIVE IN STRING IN DAISY CHAIN CONFIGURATION. TERMINATOR PIN NUMBERING IS PIN FOR PIN COMPATABLE WITH CONNECTOR J4. SEE CROSS REFERENCE NUMBER 242 FOR DETAILS.
2. NC FOR ALL UNITS EXCEPT BK5C4C/D AND BK5A7V/W. LINES ARE GROUNDED FOR THESE UNITS.

CONTROL DATA INFORMATION NORMANDALE DIVISION	CHANNEL II TERMINATOR (60 PIN I/O) LOC A2C2	CODE IDENT 19333	C	83322240	P	C
		CROSS REF NO 222		SHEET 2	PAGE 1-140	

REVISION STATUS OF SHEETS

1	2	3	4	5	6	7	8	9	10	11	12	13	14	15	16	17	18	19	20
A	A																		
B	B																		

REVISIONS

REV.	ECO.	DESCRIPTION	DRFT	DATE	CHK'D
A	PE23000	RELEASE			
B	PE48402	CORR DIAG.			

UNUSED RESISTORS

VALUE	LOCATION	OUTPUT PIN(S)
56	B2	3

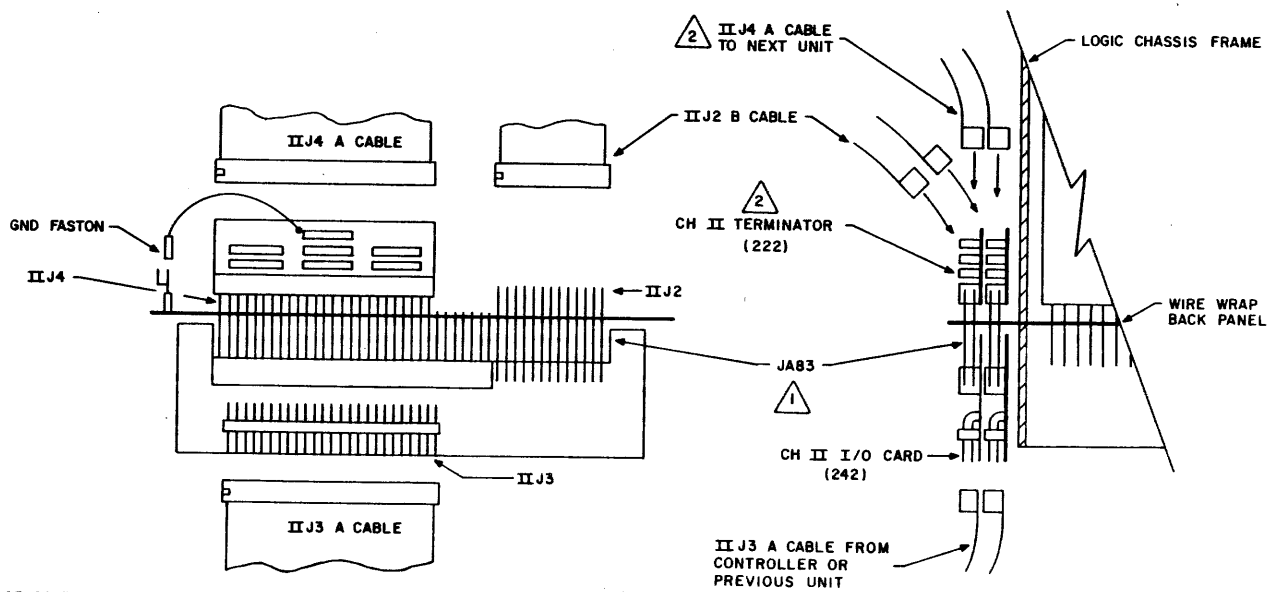

NOTE

1. FEED THROUGH W/W PINS MAKE CONTACT TO BOTH TERMINATOR AND I/O CARD
2. TERMINATOR IS REQUIRED IN PLACE OF IIJ4 A CABLE ON THE LAST UNIT IN A DAISY CHAIN CONFIGURATION AND ON ALL UNITS IN A STAR CONFIGURATION

APPLICABLE TO 50 PIN I/O

DRAWN		CONTROL DATA CORPORATION	CHANNEL II TERMINATOR DIAGRAMS	CODE IDENT. 19333	C	83322240	K B
CHECKED							
ENGINEER		NORMANDALE DIVISION	TYPE BYDV LOC A2C2	CROSS REF NO 221	SHEET 1 OF 2	PAGE 1-141	
APPROVED							

REF 83214843

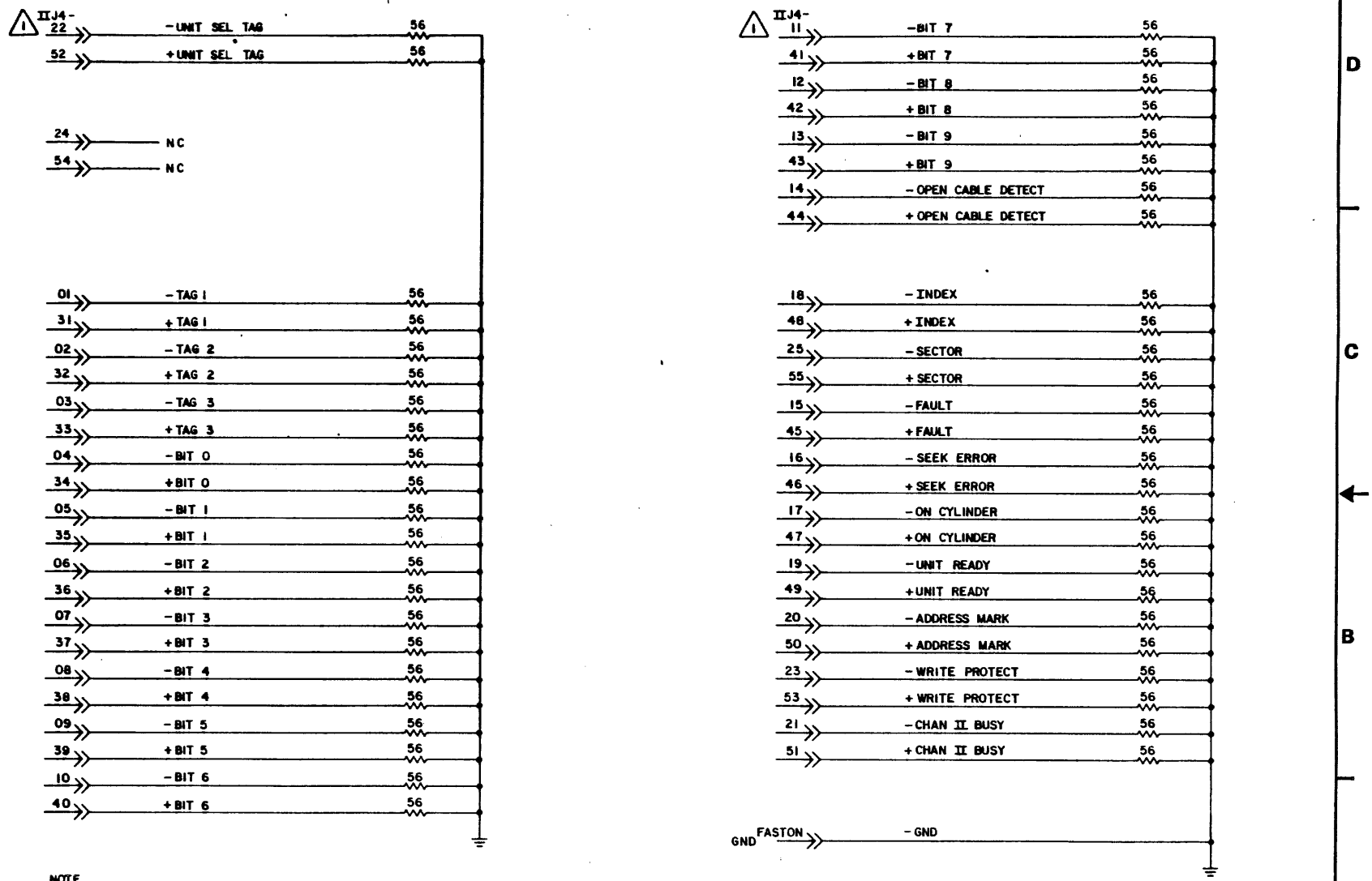

NOTE

1. TERMINATOR IS USED ON All DRIVES IN STAR CABLING CONFIGURATION, AND ON LAST DRIVE IN STRING IN DAISY CHAIN CONFIGURATION. TERMINATOR PIN NUMBERING IS PIN FOR PIN COMPATABLE WITH CONNECTOR J4. SEE CROSS REFERENCE NUMBER 242 FOR DETAILS.

CONTROL DATA CORPORATION NORMANDALE DIVISION	CHANNEL II TERMINATOR (50 PIN I/O) LOC A2C2	CODE IDENT 19333	C	83322240	A	B
		PROJ. REF NO. 222		SHEET 2	PAGE 1-142	

REVISION STATUS OF SHEETS

1	2	3	4	5	6	7	8	9	10	11	12	13	14	15	16	17	18	19	20
A	A																		
B	B																		

REVISIONS

REV.	ECO.	DESCRIPTION	DRFT	DATE	CHK'D
A	PE23000	RELEASE			
B	PE48402	CORR. DIAG			

UNUSED RESISTORS

VALUE	LOCATION	OUTPUT PIN(S)
56	A2	2,4,6
56	C2	3
56	C3	2

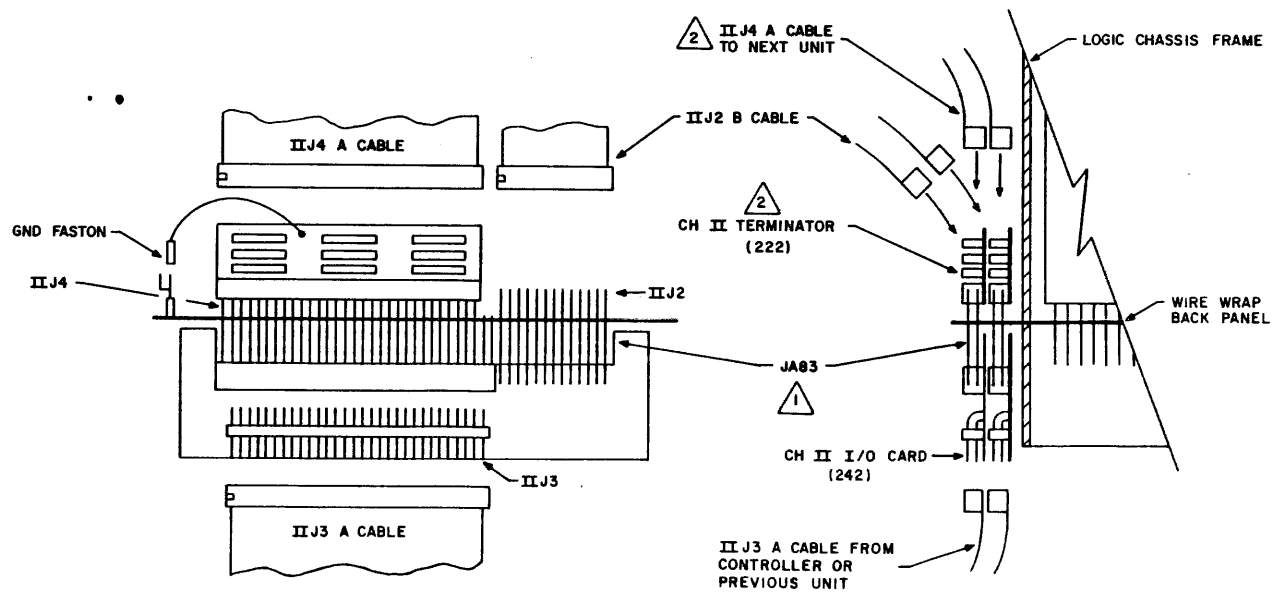

NOTE

1. FEED THROUGH W/W PINS MAKE CONTACT TO BOTH, TERMINATOR AND I/O CARD.
2. TERMINATOR IS REQUIRED IN PLACE OF IIJ4 A CABLE ON THE LAST UNIT IN A DAISY CHAIN CONFIGURATION AND ON ALL UNITS IN A STAR CONFIGURATION.

APPLICABLE TO INDEX AND SECTOR IN B CABLE

DRAWN	G. Rabine	9/20/76
CHECKED		
ENGINEER		
APPROVED		

CONTROL DATA CORPORATION
NORMANDALE DIVISION

CHANNEL II TERMINATOR DIAGRAMS

TYPE AYDV LOC A2C2

CODE IDENT				
19333	C	83322240	K	B

CROSS REF NO 221 | SHEET 1 OF 2 | PAGE 1-143

REF 83214849

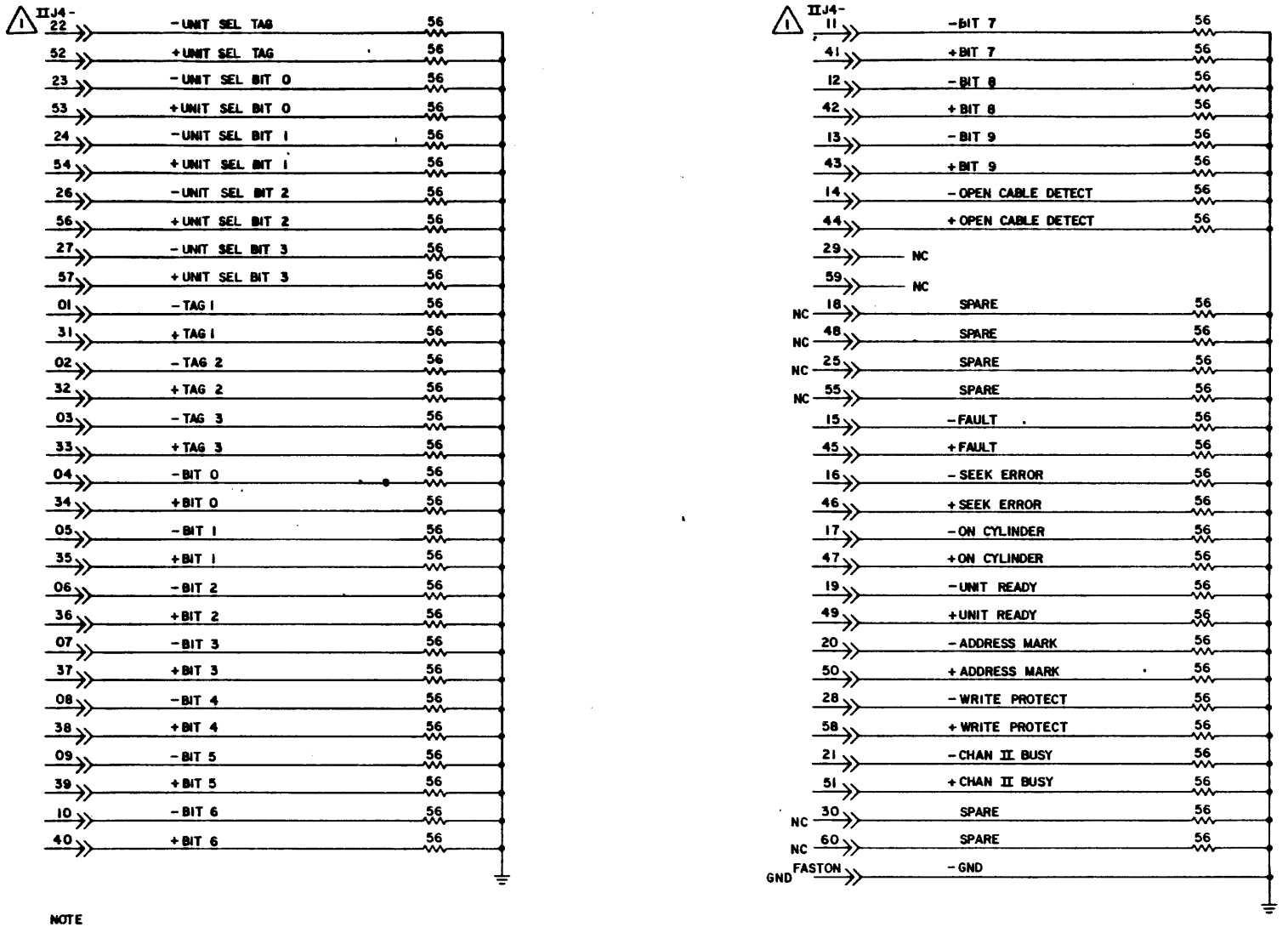

NOTE

1. TERMINATOR IS USED ON All DRIVES IN STAR CABLING CONFIGURATION, AND ON LAST DRIVE IN STRING IN DAISY CHAIN CONFIGURATION. TERMINATOR PIN NUMBERING IS PIN FOR PIN COMPATABLE WITH CONNECTOR J4. SEE CROSS REFERENCE NUMBER 242 FOR DETAILS.

CONTROL DATA CORPORATION NORMANDALE DIVISION	CHANNEL II TERMINATOR (S&IOBC) LOC A2C2	CODE IDENT 19333	C	83322240	A	B
		CROSS REF NO. 222		SHEET 2	PAGE 1-144	

REVISION STATUS OF SHEETS

1	2	3	4	5	6	7	8	9	10	11	12	13	14	15	16	17	18	19	20
A	A	A																	
B	B	B																	

REVISIONS

REV.	ECO.	DESCRIPTION	DRFT.	DATE	CHK'D
A	PE23000	RELEASED			
B	PE48402	CORRECT DIAGRAMS	WEB	12-17-76	

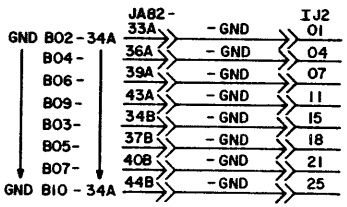

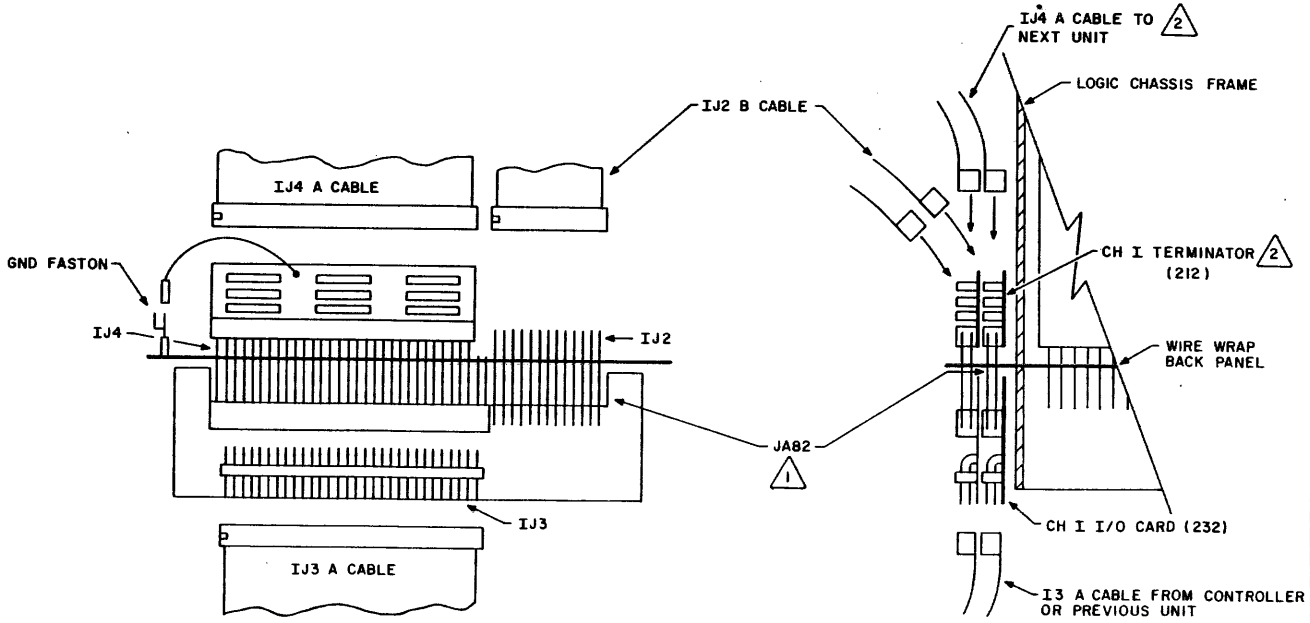

NOTE:

1. FEED THROUGH W/W PINS MAKE CONTACT TO BOTH, TERMINATOR AND I/O CARD.
2. TERMINATOR IS REQUIRED IN PLACE OF IJ4 A CABLE ON THE LAST UNIT IN A DAISY CHAIN CONFIGURATION AND ON ALL UNITS IN A STAR CONFIGURATION.

APPLICABLE TO 60 PIN I/O

DRAWN	G. RAGLINE	9/27/76
CHECKED		
ENGINEER		
APPROVED		

CONTROL DATA CORPORATION
NORMANDALE DIVISION

CHANNEL I I/O DIAGRAMS

TYPE AXYV LOC A2D1

CODE IDENT				
19333	C	83322240	K	B

CROSS REF NO 231 | SHEET 1 OF 3 | PAGE 1-145

REF 83214823

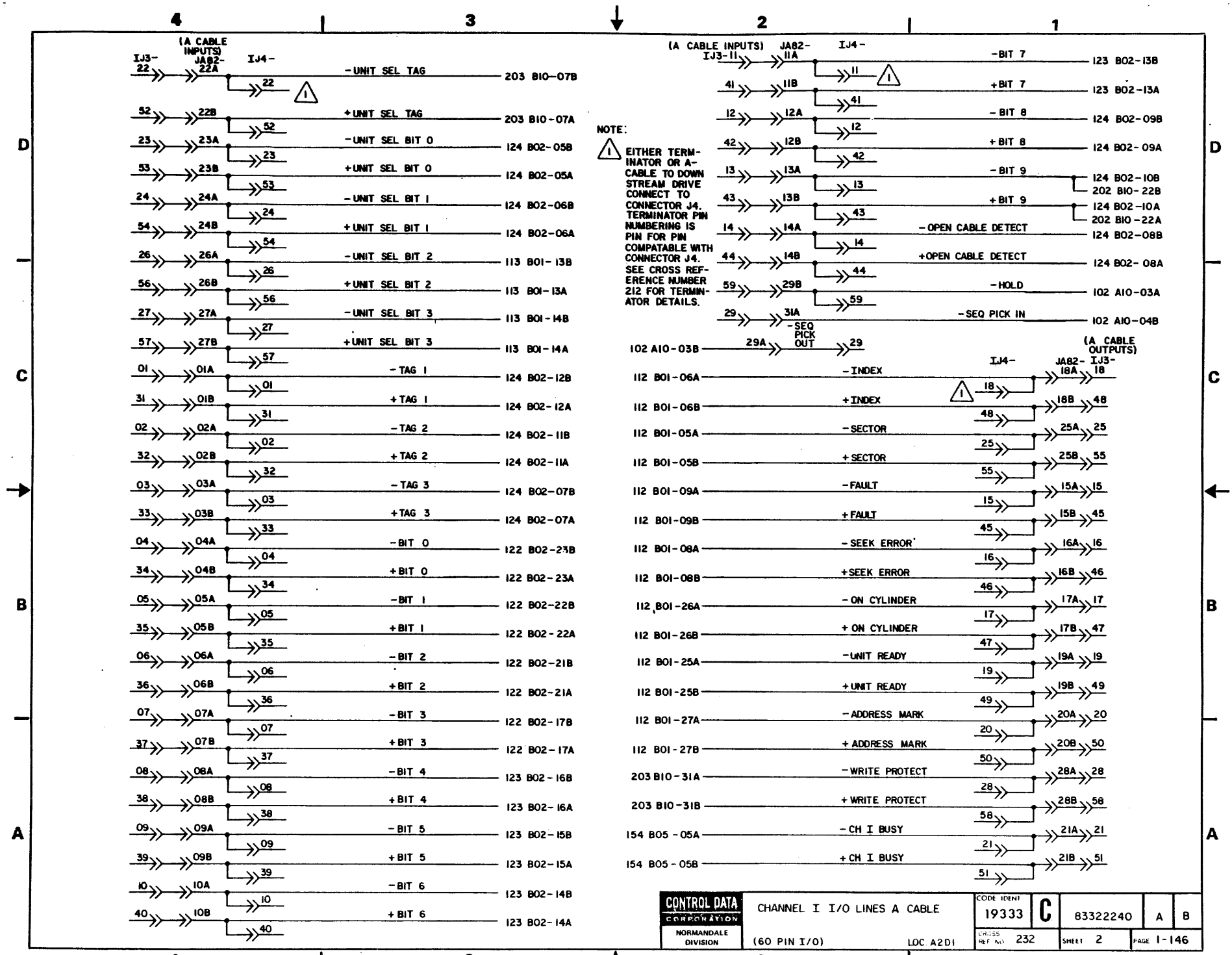
4
3
2
1
D
C
B
A
(A CABLE INPUTS)
IJ3-
JA82-
IJ4-
22
22A
-UNIT SEL TAG
203 B10-07B
52
22B
+UNIT SEL TAG
203 B10-07A
23
23A
-UNIT SEL BIT 0
124 B02-05B
53
23B
+UNIT SEL BIT 0
124 B02-05A
24
24A
-UNIT SEL BIT 1
124 B02-06B
54
24B
+UNIT SEL BIT 1
124 B02-06A
26
26A
-UNIT SEL BIT 2
113 B01-13B
56
26B
+UNIT SEL BIT 2
113 B01-13A
27
27A
-UNIT SEL BIT 3
113 B01-14B
57
27B
+UNIT SEL BIT 3
113 B01-14A
01
01A
-TAG 1
124 B02-12B
31
01B
+TAG 1
124 B02-12A
02
02A
-TAG 2
124 B02-11B
32
02B
+TAG 2
124 B02-11A
03
03A
-TAG 3
124 B02-07B
33
03B
+TAG 3
124 B02-07A
04
04A
-BIT 0
122 B02-23B
34
04B
+BIT 0
122 B02-23A
05
05A
-BIT 1
122 B02-22B
35
05B
+BIT 1
122 B02-22A
06
06A
-BIT 2
122 B02-21B
36
06B
+BIT 2
122 B02-21A
07
07A
-BIT 3
122 B02-17B
37
07B
+BIT 3
122 B02-17A
08
08A
-BIT 4
123 B02-16B
38
08B
+BIT 4
123 B02-16A
09
09A
-BIT 5
123 B02-15B
39
09B
+BIT 5
123 B02-15A
10
10A
-BIT 6
123 B02-14B
40
10B
+BIT 6
123 B02-14A
(A CABLE INPUTS)
IJ3-11
JA82-11A
IJ4-
-BIT 7
123 B02-13B
41
11B
+BIT 7
123 B02-13A
12
12A
-BIT 8
124 B02-09B
42
12B
+BIT 8
124 B02-09A
13
13A
-BIT 9
124 B02-10B
202 B10-22B
43
13B
+BIT 9
124 B02-10A
202 B10-22A
14
14A
-OPEN CABLE DETECT
124 B02-08B
44
14B
+OPEN CABLE DETECT
124 B02-08A
59
29B
-HOLD
102 A10-03A
29
31A
-SEQ PICK IN
102 A10-04B
NOTE:
1 EITHER TERMINATOR OR A-CABLE TO DOWN STREAM DRIVE CONNECT TO CONNECTOR J4. TERMINATOR PIN NUMBERING IS PIN FOR PIN COMPATABLE WITH CONNECTOR J4. SEE CROSS REFERENCE NUMBER 212 FOR TERMINATOR DETAILS.
102 A10-03B
29A
-SEQ PICK OUT
29
(A CABLE OUTPUTS)
IJ4-
JA82-
IJ3-
112 B01-06A
-INDEX
18A
18
112 B01-06B
+INDEX
18B
48
112 B01-05A
-SECTOR
25A
25
112 B01-05B
+SECTOR
25B
55
112 B01-09A
-FAULT
15A
15
112 B01-09B
+FAULT
15B
45
112 B01-08A
-SEEK ERROR
16A
16
112 B01-08B
+SEEK ERROR
16B
46
112 B01-26A
-ON CYLINDER
17A
17
112 B01-26B
+ON CYLINDER
17B
47
112 B01-25A
-UNIT READY
19A
19
112 B01-25B
+UNIT READY
19B
49
112 B01-27A
-ADDRESS MARK
20A
20
112 B01-27B
+ADDRESS MARK
20B
50
203 B10-31A
-WRITE PROTECT
28A
28
203 B10-31B
+WRITE PROTECT
28B
58
154 B05-05A
-CH I BUSY
21A
21
154 B05-05B
+CH I BUSY
21B
51
CONTROL DATA CORPORATION
NORMANDALE DIVISION
CHANNEL I I/O LINES A CABLE
(60 PIN I/O)
LOC A2D1
CODE IDENT 19333
C
83322240
A
B
CROSS REF NO 232
SHEET 2
PAGE 1-146

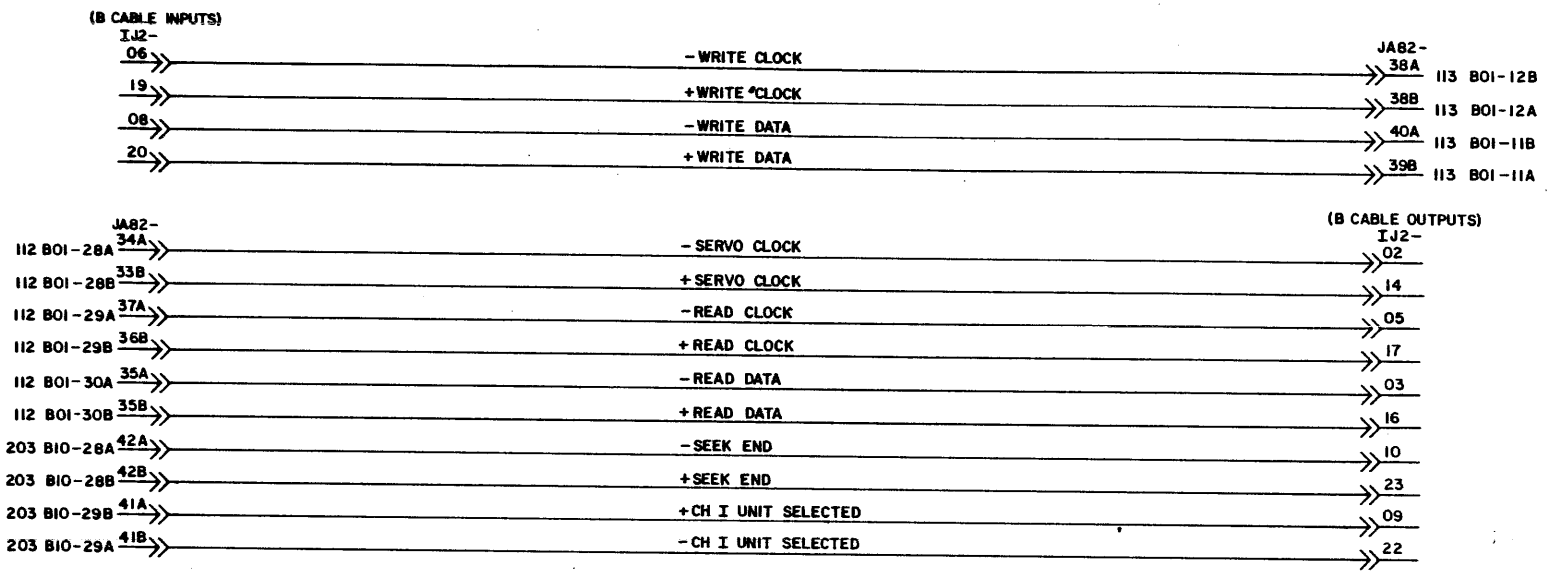

CONTROL DATA CORPORATION NORMANDALE DIVISION	CHANNEL I I/O LINES B CABLE (60 PIN I/O) LOC A2D1	CODE IDENT 19333	C	83322240	A	B
		CROSS REF 233		SHEET 3	PAGE 1-147/148	

REVISION STATUS OF SHEETS

1	2	3	4	5	6	7	8	9	10	11	12	13	14	15	16	17	18	19	20
A	A	A																	
B	B	B																	

REVISIONS

REV.	ECO.	DESCRIPTION	DRFT.	DATE	CHK'D
A	PE23000	RELEASED			
B	PE48402	CORR DIAG			

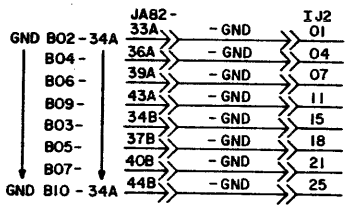

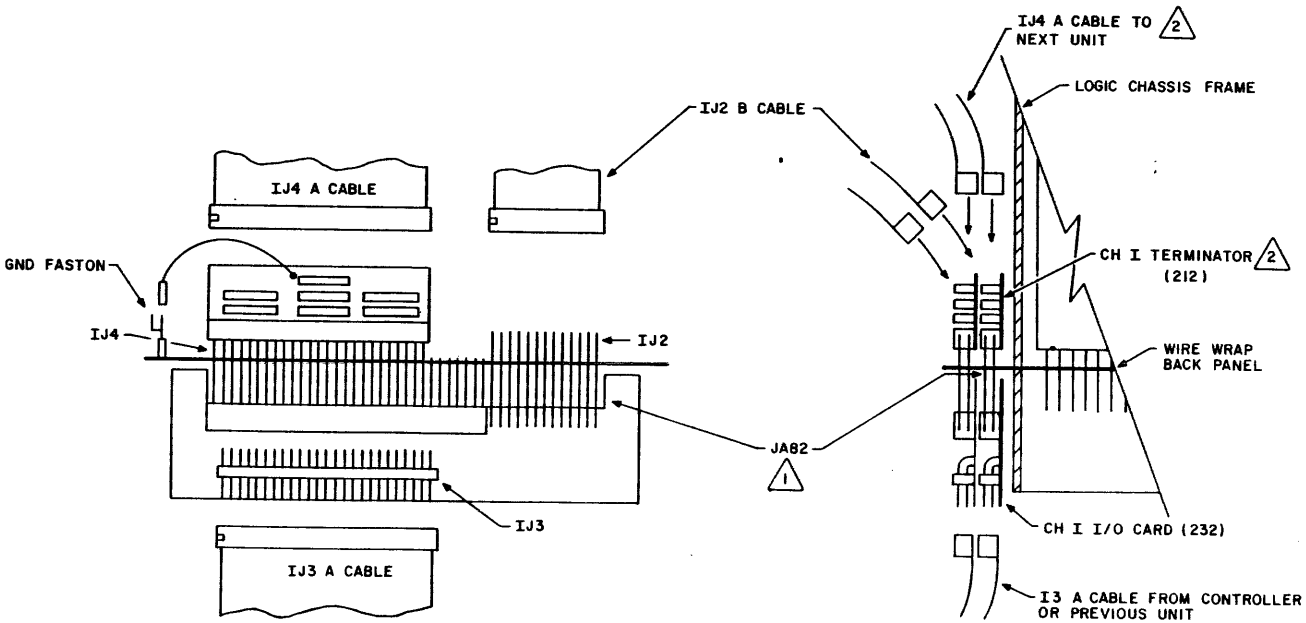

NOTE:

1. FEED THROUGH W/W PINS MAKE CONTACT TO BOTH, TERMINATOR AND I/O CARD.
2. TERMINATOR IS REQUIRED IN PLACE OF IJ4 A CABLE ON THE LAST UNIT IN A DAISY CHAIN CONFIGURATION AND ON ALL UNITS IN A STAR CONFIGURATION.

APPLICABLE TO 50 PIN I/O

DRAWN	G Rasina	9/27/74
CHECKED		
ENGINEER		
APPROVED		

CONTROL DATA CORPORATION
NORMANDALE DIVISION

CHANNEL I I/O DIAGRAMS

TYPE CXYV LOC A2D1

CODE IDENT				
19333	C	83322240	K	B

CROSS REF NO 231 | SHEET 1 OF 3 | PAGE 1-149

REF 83214844

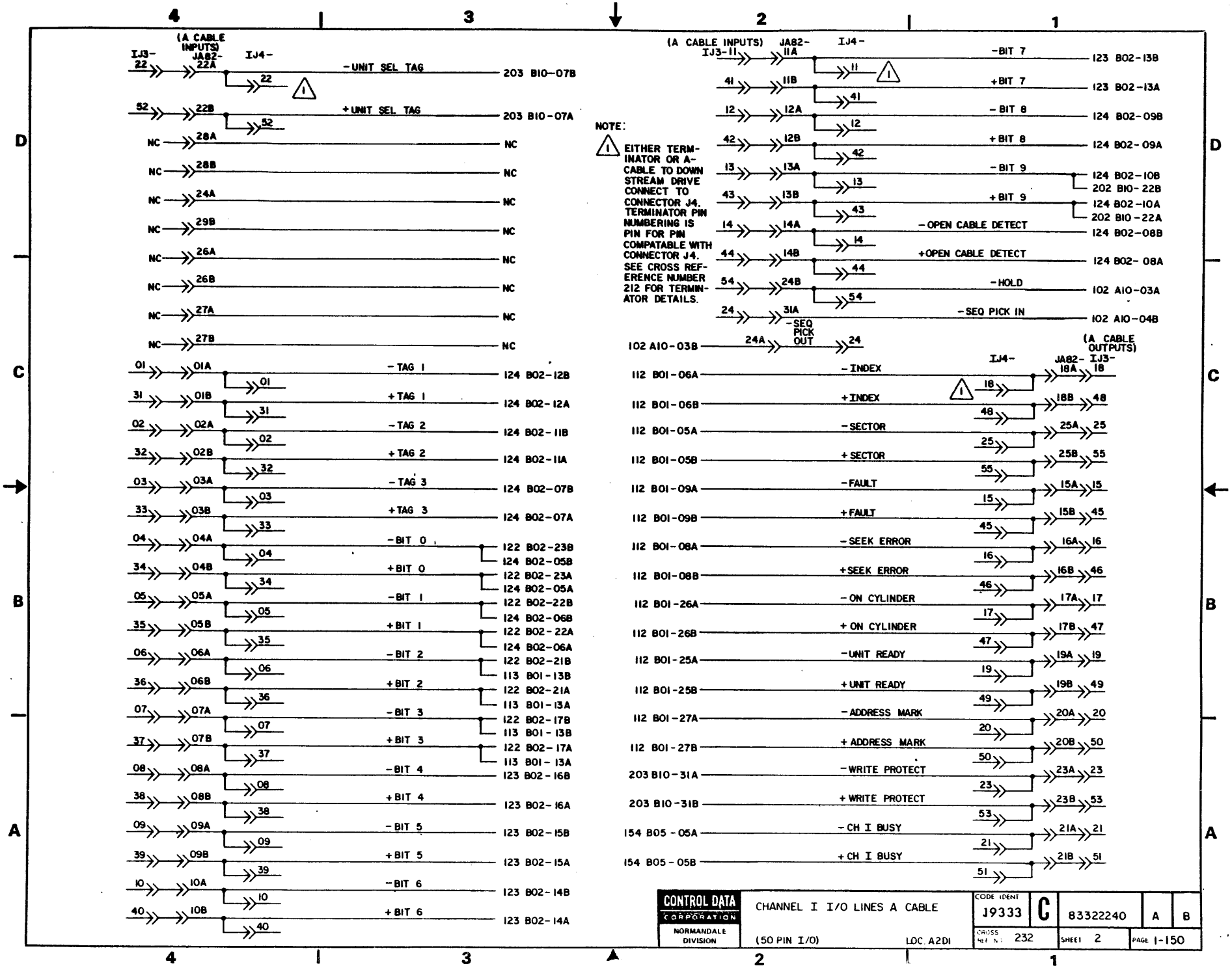
(A CABLE INPUTS)
IJ3-
JA82-
IJ4-
-UNIT SEL TAG
203 B10-07B
+UNIT SEL TAG
203 B10-07A
NC
-TAG 1
124 B02-12B
+TAG 1
124 B02-12A
-TAG 2
124 B02-11B
+TAG 2
124 B02-11A
-TAG 3
124 B02-07B
+TAG 3
124 B02-07A
-BIT 0
122 B02-23B
124 B02-05B
+BIT 0
122 B02-23A
124 B02-05A
-BIT 1
122 B02-22B
124 B02-06B
+BIT 1
122 B02-22A
124 B02-06A
-BIT 2
122 B02-21B
113 B01-13B
+BIT 2
122 B02-21A
113 B01-13A
-BIT 3
122 B02-17B
113 B01-13B
+BIT 3
122 B02-17A
113 B01-13A
-BIT 4
123 B02-16B
+BIT 4
123 B02-16A
-BIT 5
123 B02-15B
+BIT 5
123 B02-15A
-BIT 6
123 B02-14B
+BIT 6
123 B02-14A
NOTE:
1 EITHER TERMINATOR OR A-CABLE TO DOWN STREAM DRIVE CONNECT TO CONNECTOR J4. TERMINATOR PIN NUMBERING IS PIN FOR PIN COMPATABLE WITH CONNECTOR J4. SEE CROSS REFERENCE NUMBER 212 FOR TERMINATOR DETAILS.
-BIT 7
123 B02-13B
+BIT 7
123 B02-13A
-BIT 8
124 B02-09B
+BIT 8
124 B02-09A
-BIT 9
124 B02-10B
202 B10-22B
+BIT 9
124 B02-10A
202 B10-22A
-OPEN CABLE DETECT
124 B02-08B
+OPEN CABLE DETECT
124 B02-08A
-HOLD
102 A10-03A
-SEQ PICK IN
102 A10-04B
-SEQ PICK OUT
102 A10-03B
(A CABLE OUTPUTS)
-INDEX
112 B01-06A
+INDEX
112 B01-06B
-SECTOR
112 B01-05A
+SECTOR
112 B01-05B
-FAULT
112 B01-09A
+FAULT
112 B01-09B
-SEEK ERROR
112 B01-08A
+SEEK ERROR
112 B01-08B
-ON CYLINDER
112 B01-26A
+ON CYLINDER
112 B01-26B
-UNIT READY
112 B01-25A
+UNIT READY
112 B01-25B
-ADDRESS MARK
112 B01-27A
+ADDRESS MARK
112 B01-27B
-WRITE PROTECT
203 B10-31A
+WRITE PROTECT
203 B10-31B
-CH I BUSY
154 B05-05A
+CH I BUSY
154 B05-05B
CONTROL DATA CORPORATION
NORMANDALE DIVISION
CHANNEL I I/O LINES A CABLE
(50 PIN I/O)
LOC A2D1
CODE IDENT J9333
C
83322240
A
B
CROSS REF NO. 232
SHEET 2
PAGE 1-150

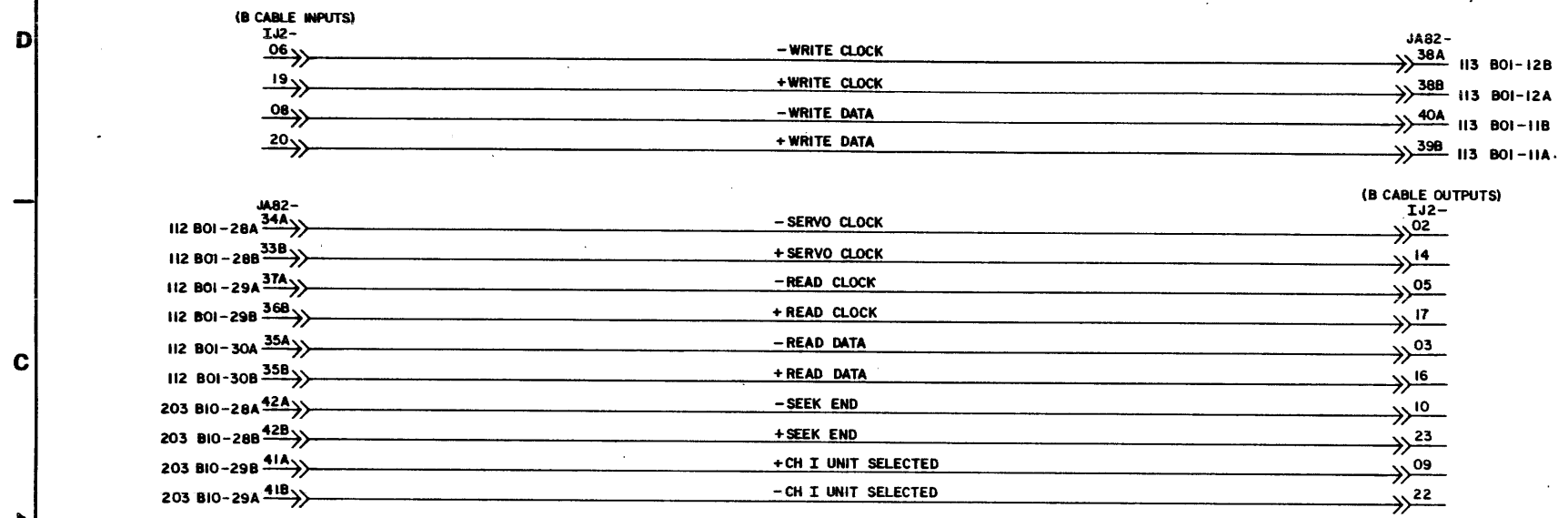

CONTROL DATA CORPORATION NORMANDALE DIVISION	CHANNEL I I/O LINES B CABLE (50 PIN I/O) LOC. A2D1	CODE IDENT 19333	C	83322240	A	B
		CHG'S REF NO. 233		SHEET 3	PAGE 151/152	

REVISION STATUS OF SHEETS

1	2	3	4	5	6	7	8	9	10	11	12	13	14	15	16	17	18	19	20
A	A	A																	
B	B	B																	

REVISIONS

REV.	ECO.	DESCRIPTION	DRFT.	DATE	CHK'D
A	PE23000	RELEASED			
B	PE48402	CORRECT DIAGRAMS	WEB	12-17-76	

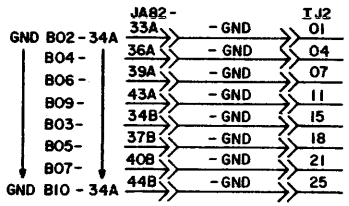

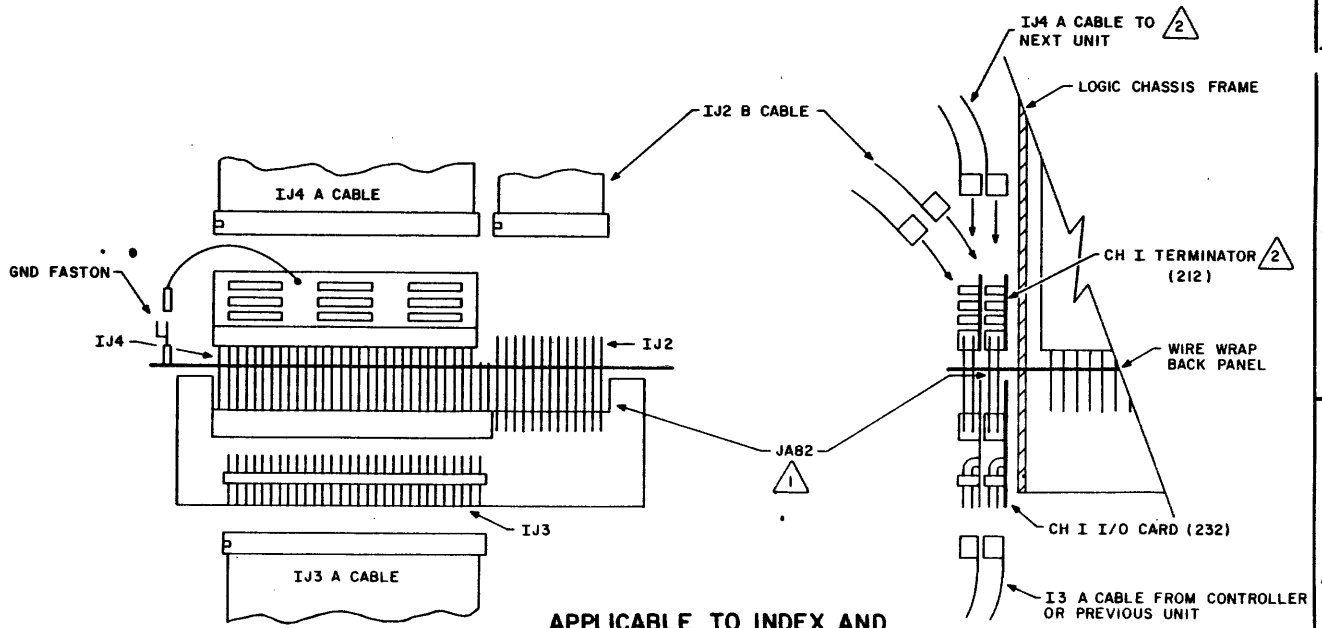

APPLICABLE TO INDEX AND SECTOR IN B CABLE

NOTE:

1. FEED THROUGH W/W PINS MAKE CONTACT TO BOTH, TERMINATOR AND I/O CARD.
2. TERMINATOR IS REQUIRED IN PLACE OF IJ4 A CABLE ON THE LAST UNIT IN A DAISY CHAIN CONFIGURATION AND ON ALL UNITS IN A STAR CONFIGURATION.

DRAWN		CONTROL DATA NORMANDALE DIVISION	CHANNEL I I/O DIAGRAMS	CODE IDENT 19333	C	83322240 K B
CHECKED						
ENGINEER						
APPROVED			TYPE: AXYV LOC A2D1	CROSS REF NO 231	SHEET 1 OF 3	PAGE 1-153

REF 83214850

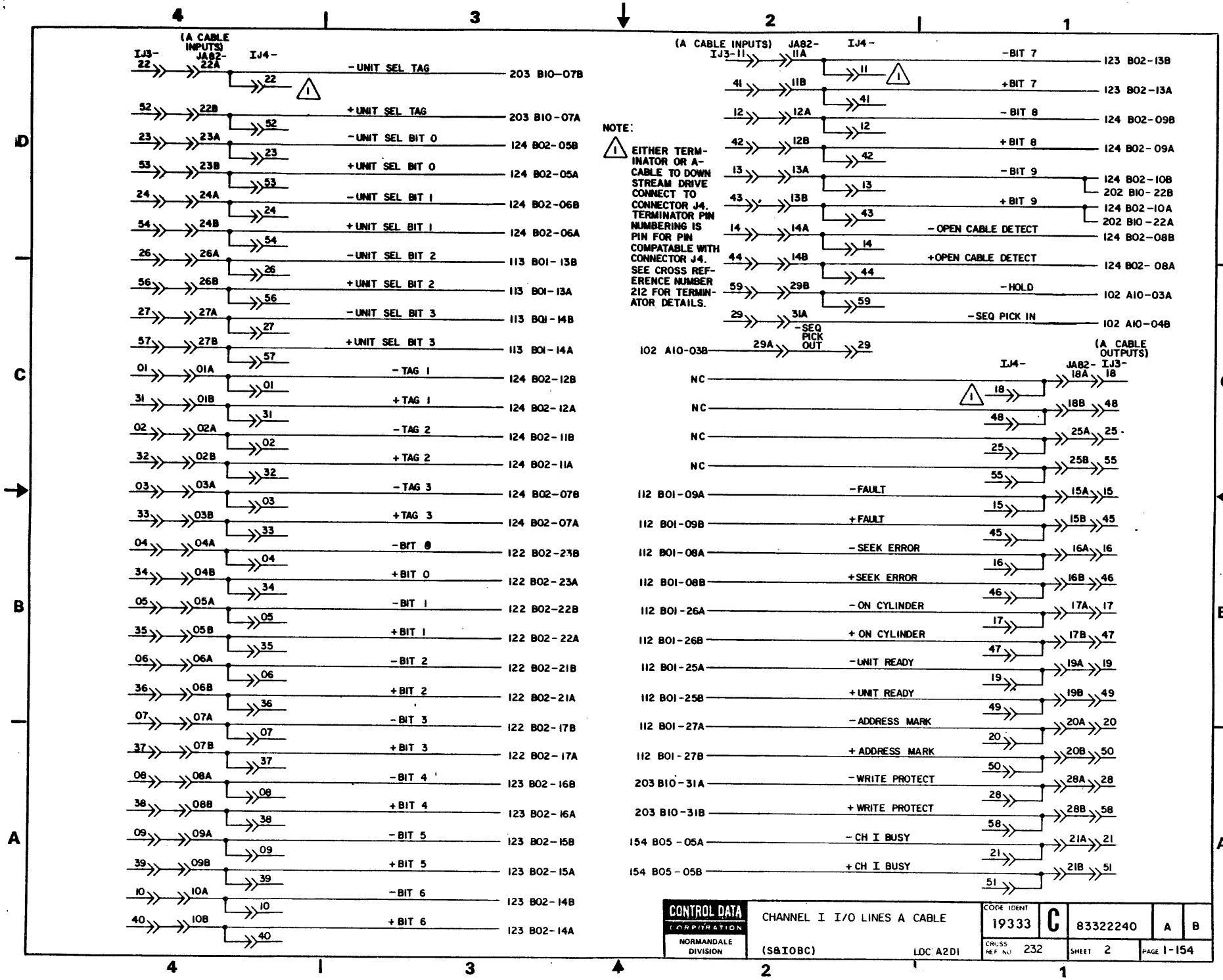
(A CABLE INPUTS) IJ3- JA82- IJ4-
-UNIT SEL TAG 203 B10-07B
+UNIT SEL TAG 203 B10-07A
-UNIT SEL BIT 0 124 B02-05B
+UNIT SEL BIT 0 124 B02-05A
-UNIT SEL BIT 1 124 B02-06B
+UNIT SEL BIT 1 124 B02-06A
-UNIT SEL BIT 2 113 B01-13B
+UNIT SEL BIT 2 113 B01-13A
-UNIT SEL BIT 3 113 B01-14B
+UNIT SEL BIT 3 113 B01-14A
-TAG 1 124 B02-12B
+TAG 1 124 B02-12A
-TAG 2 124 B02-11B
+TAG 2 124 B02-11A
-TAG 3 124 B02-07B
+TAG 3 124 B02-07A
-BIT 0 122 B02-23B
+BIT 0 122 B02-23A
-BIT 1 122 B02-22B
+BIT 1 122 B02-22A
-BIT 2 122 B02-21B
+BIT 2 122 B02-21A
-BIT 3 122 B02-17B
+BIT 3 122 B02-17A
-BIT 4 123 B02-16B
+BIT 4 123 B02-16A
-BIT 5 123 B02-15B
+BIT 5 123 B02-15A
-BIT 6 123 B02-14B
+BIT 6 123 B02-14A
(A CABLE INPUTS) IJ3- JA82- IJ4-
-BIT 7 123 B02-13B
+BIT 7 123 B02-13A
-BIT 8 124 B02-09B
+BIT 8 124 B02-09A
-BIT 9 124 B02-10B 202 B10-22B
+BIT 9 124 B02-10A 202 B10-22A
-OPEN CABLE DETECT 124 B02-08B
+OPEN CABLE DETECT 124 B02-08A
-HOLD 102 A10-03A
-SEQ PICK IN 102 A10-04B
102 A10-03B -SEQ PICK OUT
NOTE:
1 EITHER TERMINATOR OR A-CABLE TO DOWN STREAM DRIVE CONNECT TO CONNECTOR J4. TERMINATOR PIN NUMBERING IS PIN FOR PIN COMPATABLE WITH CONNECTOR J4. SEE CROSS REFERENCE NUMBER 212 FOR TERMINATOR DETAILS.
(A CABLE OUTPUTS) IJ4- JA82- IJ3-
NC
NC
NC
NC
112 B01-09A -FAULT
112 B01-09B +FAULT
112 B01-08A -SEEK ERROR
112 B01-08B +SEEK ERROR
112 B01-26A -ON CYLINDER
112 B01-26B +ON CYLINDER
112 B01-25A -UNIT READY
112 B01-25B +UNIT READY
112 B01-27A -ADDRESS MARK
112 B01-27B +ADDRESS MARK
203 B10-31A -WRITE PROTECT
203 B10-31B +WRITE PROTECT
154 B05-05A -CH I BUSY
154 B05-05B +CH I BUSY
CONTROL DATA CORPORATION
NORMANDALE DIVISION
CHANNEL I I/O LINES A CABLE
(S&IOBC)
LOC A2D1
CODE IDENT 19333
C
83322240
A
B
CROSS REF NO 232
SHEET 2
PAGE 1-154

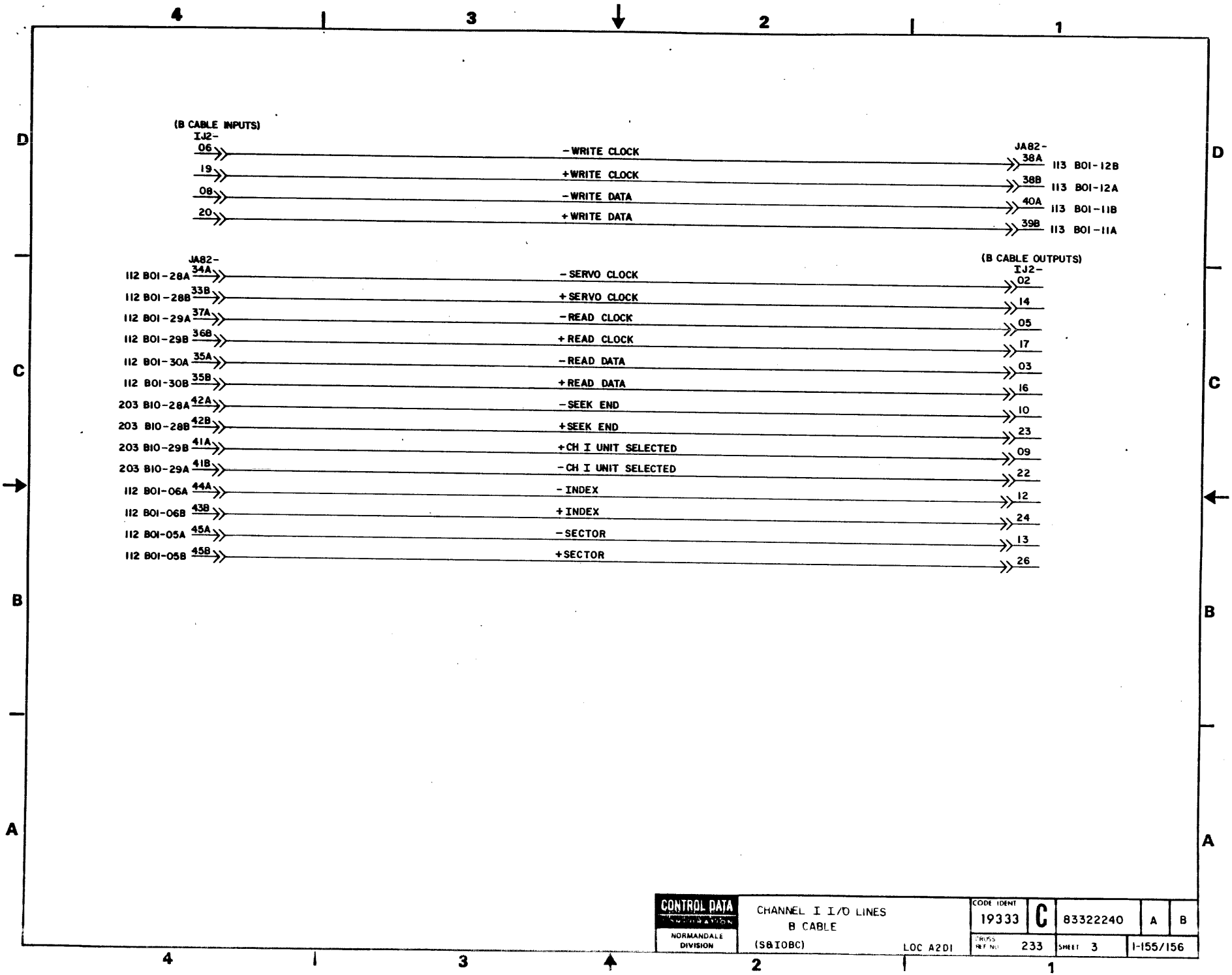
(B CABLE INPUTS)
IJ2-
06
19
08
20
-WRITE CLOCK
+WRITE CLOCK
-WRITE DATA
+WRITE DATA
JA82-
38A
38B
40A
39B
113 BOI-12B
113 BOI-12A
113 BOI-11B
113 BOI-11A
JA82-
112 BOI-28A 34A
112 BOI-28B 33B
112 BOI-29A 37A
112 BOI-29B 36B
112 BOI-30A 35A
112 BOI-30B 35B
203 BIO-28A 42A
203 BIO-28B 42B
203 BIO-29B 41A
203 BIO-29A 41B
112 BOI-06A 44A
112 BOI-06B 43B
112 BOI-05A 45A
112 BOI-05B 45B
-SERVO CLOCK
+SERVO CLOCK
-READ CLOCK
+READ CLOCK
-READ DATA
+READ DATA
-SEEK END
+SEEK END
+CH I UNIT SELECTED
-CH I UNIT SELECTED
-INDEX
+INDEX
-SECTOR
+SECTOR
(B CABLE OUTPUTS)
IJ2-
02
14
05
17
03
16
10
23
09
22
12
24
13
26
CONTROL DATA
NORMANDALE DIVISION
CHANNEL I I/O LINES
B CABLE
(S&IOBC)
LOC A2D1
CODE IDENT 19333
C
83322240
A
B
CROSS REF NO 233
SHEET 3
1-155/156

REVISION STATUS OF SHEETS

1	2	3	4	5	6	7	8	9	10	11	12	13	14	15	16	17	18	19	20
A	A	A																	

REVISIONS

REV	ECO	DESCRIPTION	DRFT	DATE	CHK'D
A	PE23000	RELEASED			

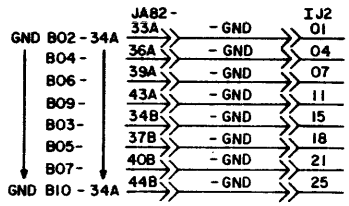

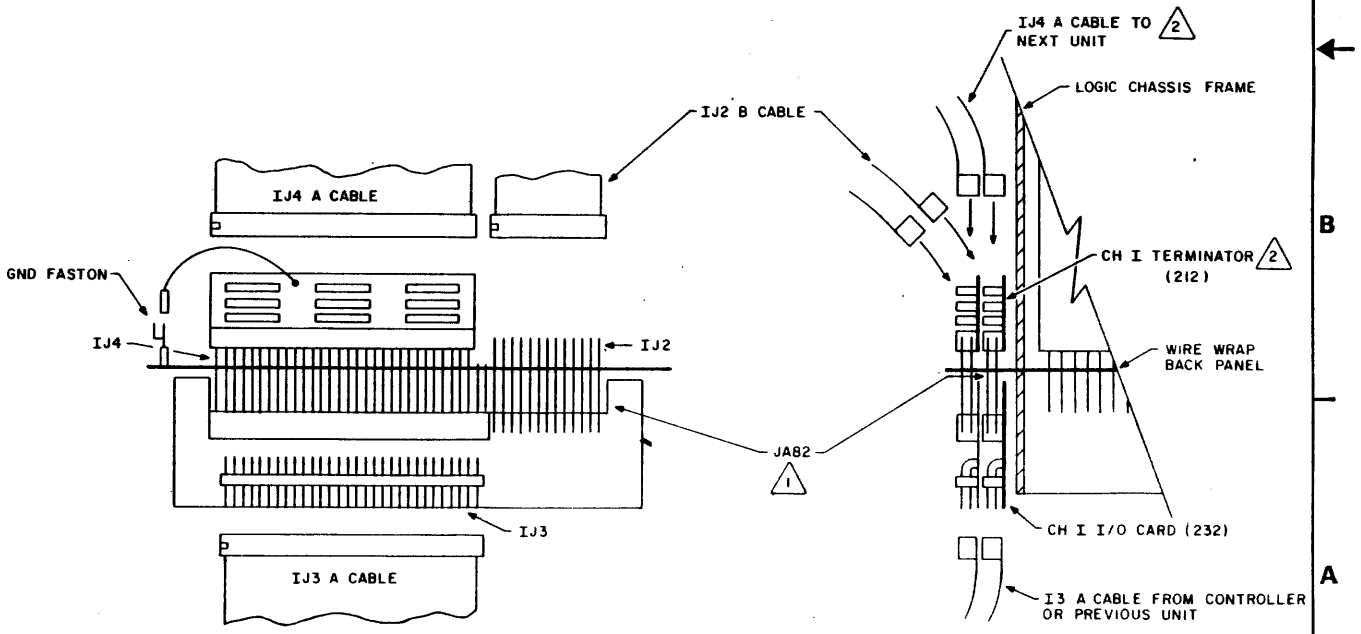

NOTE

1. FEED THROUGH W/W PINS MAKE CONTACT TO BOTH, TERMINATOR AND I/O CARD
2. TERMINATOR IS REQUIRED IN PLACE OF IJ4 A CABLE ON THE LAST UNIT IN A DAISY CHAIN CONFIGURATION AND ON ALL UNITS IN A STAR CONFIGURATION.

APPLICABLE TO BK5A7-V,W AND BK5C4-C,D ONLY

DRAWN	CONTROL DATA CORPORATION	A AND B CABLE CHANNEL I I/O DIAGRAMS	CODE IDENT 19333	C	83322240	P	A
CHECKED							
ENGINEER							
APPROVED	NORMANDALE DIVISION	TYPE AXYV LOC A2D1	CROSS REF NO. 231	SHEET 1 OF 3	PAGE 1-156.1		

REF. 83214856

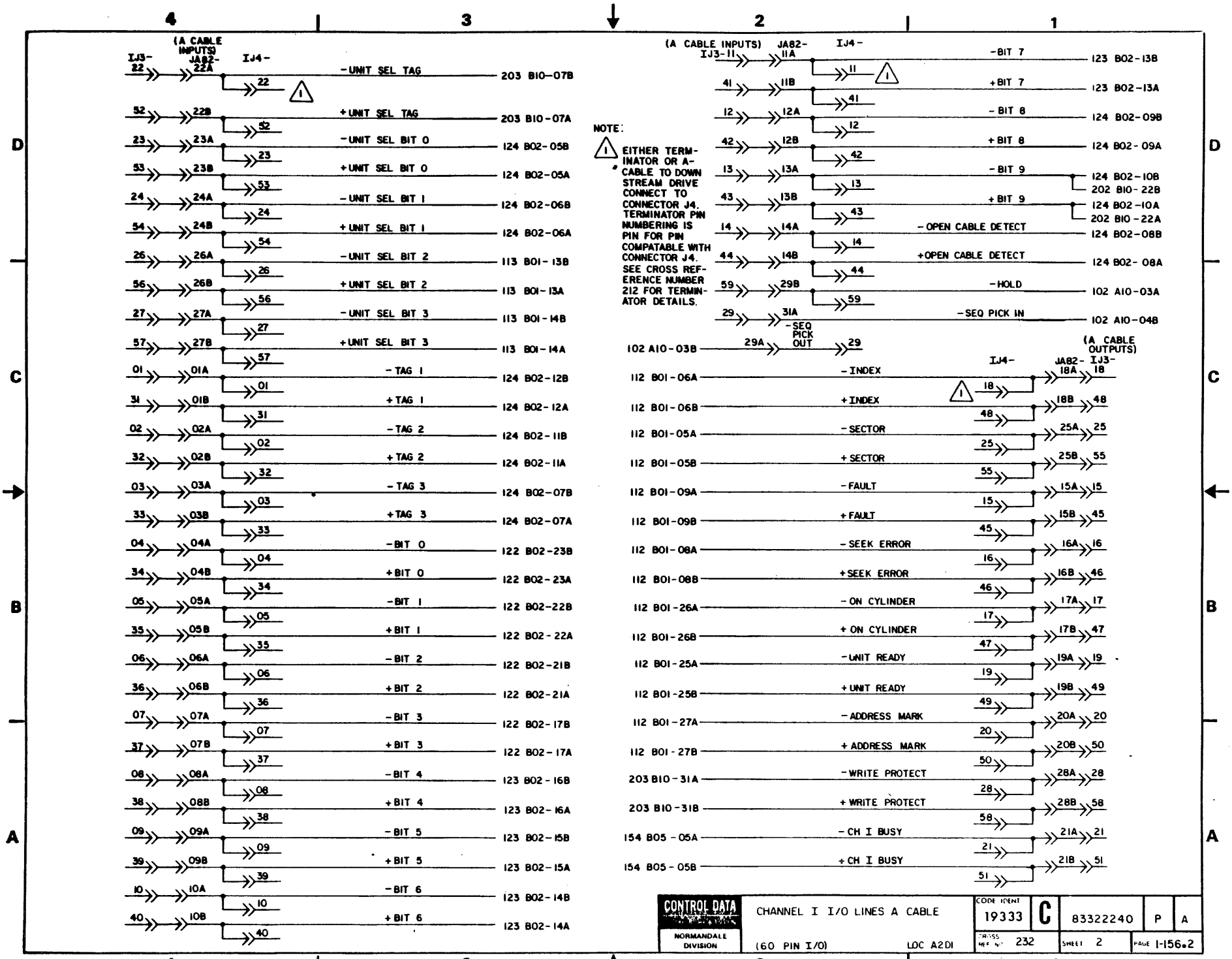

CONTROL DATA NORMANDALE DIVISION	CHANNEL I I/O LINES A CABLE (60 PIN I/O) LOC A2D1	CODE IDENT 19333	C	83322240	P	A
		CROSS REF NO. 232		SHEET 2	PAGE 1-156.2	

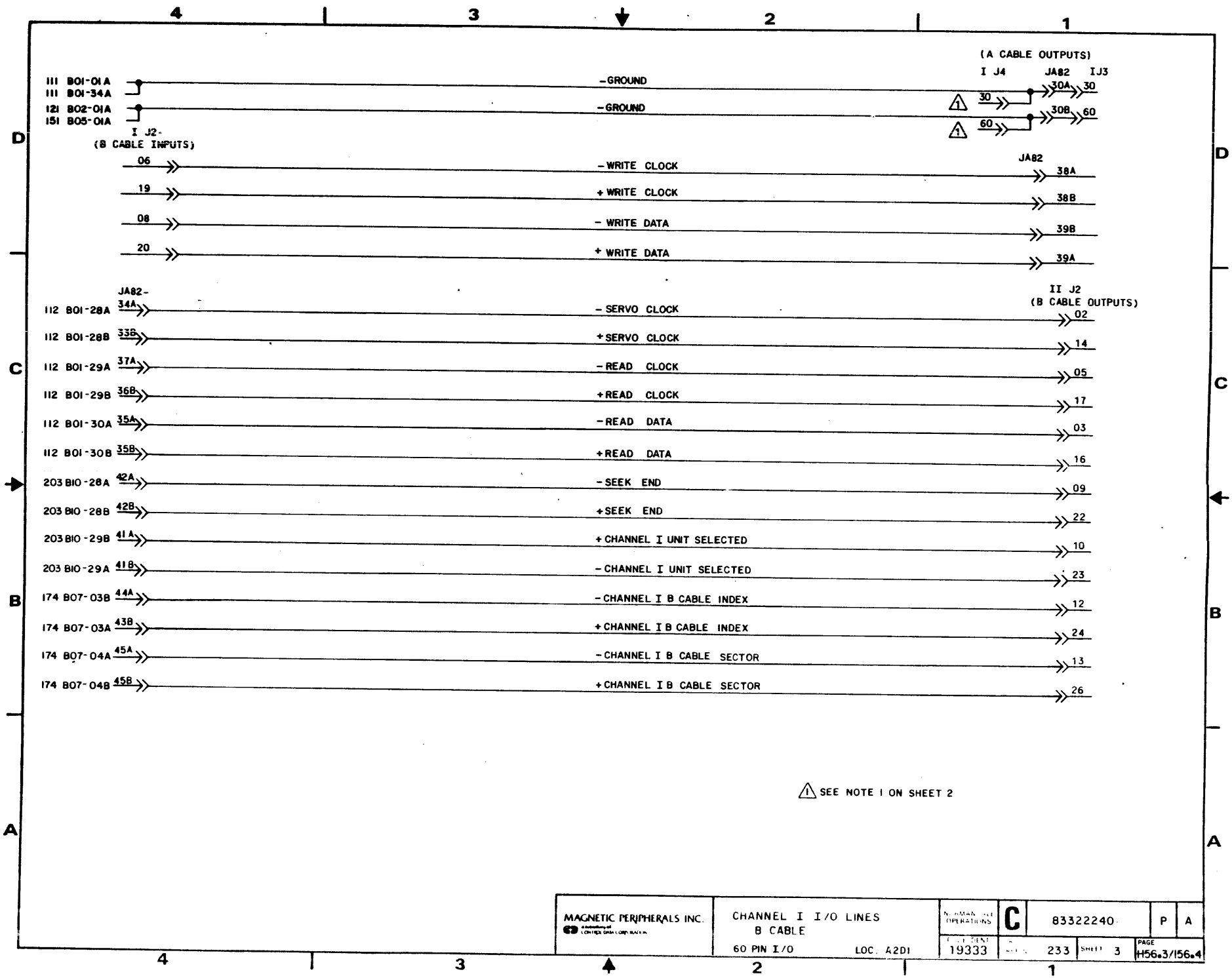
(A CABLE OUTPUTS)
I J4
JA82
IJ3
111 B01-01A
111 B01-34A
121 B02-01A
151 B05-01A
-GROUND
-GROUND
30
60
30A
30B
30
60
I J2-
(B CABLE INPUTS)
JA82
06
19
08
20
-WRITE CLOCK
+WRITE CLOCK
-WRITE DATA
+WRITE DATA
38A
38B
39B
39A
JA82-
II J2
(B CABLE OUTPUTS)
112 B01-28A 34A
112 B01-28B 33B
112 B01-29A 37A
112 B01-29B 36B
112 B01-30A 35A
112 B01-30B 35B
203 B10-28A 42A
203 B10-28B 42B
203 B10-29B 41A
203 B10-29A 41B
174 B07-03B 44A
174 B07-03A 43B
174 B07-04A 45A
174 B07-04B 45B
-SERVO CLOCK
+SERVO CLOCK
-READ CLOCK
+READ CLOCK
-READ DATA
+READ DATA
-SEEK END
+SEEK END
+CHANNEL I UNIT SELECTED
-CHANNEL I UNIT SELECTED
-CHANNEL I B CABLE INDEX
+CHANNEL I B CABLE INDEX
-CHANNEL I B CABLE SECTOR
+CHANNEL I B CABLE SECTOR
02
14
05
17
03
16
09
22
10
23
12
24
13
26
SEE NOTE 1 ON SHEET 2
MAGNETIC PERIPHERALS INC.
CHANNEL I I/O LINES
B CABLE
60 PIN I/O
LOC. A2D1
C
83322240
P
A
19333
233
SHEET 3
PAGE
H56.3/156.4

REVISION STATUS OF SHEETS

1	2	3	4	5	6	7	8	9	10	11	12	13	14	15	16	17	18	19	20
A	A	A																	
B	B	B																	

REVISIONS

REV	ECO.	DESCRIPTION	DRFT	DATE	CHK'D
A	PE23000	RELEASED			
B	PE48402	CORRECT DIAGRAMS	WEB	12-17-76	

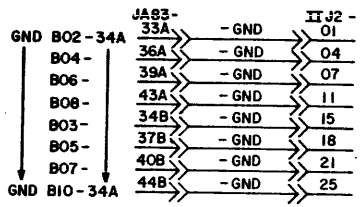

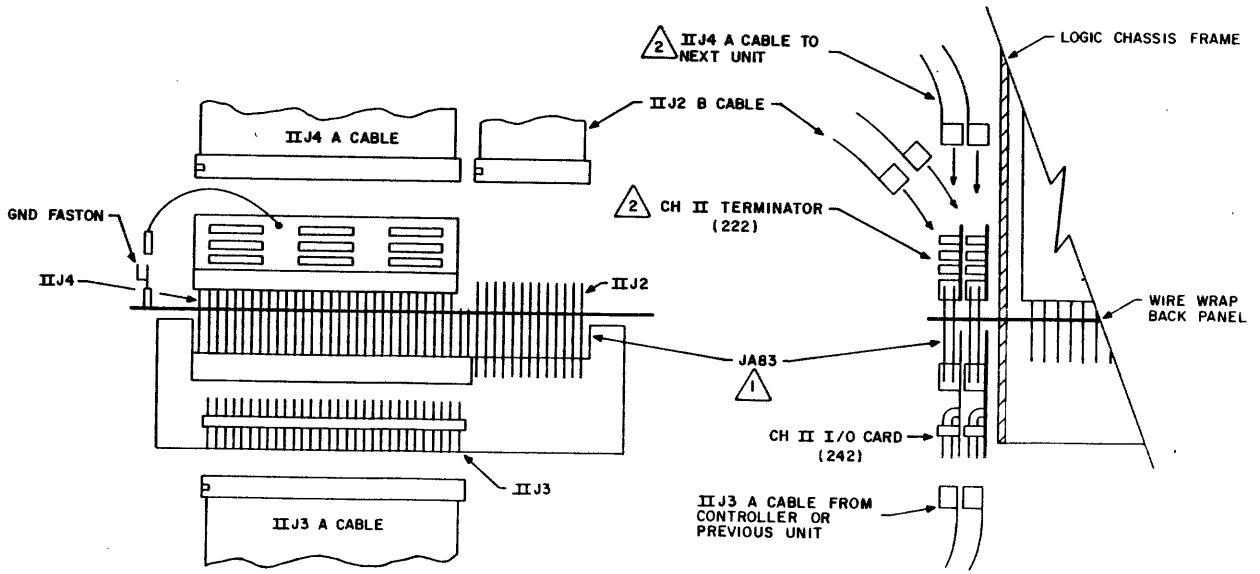

NOTE

1. FEED THROUGH W/W PINS MAKE CONTACT TO BOTH, TERMINATOR AND I/O CARD
2. TERMINATOR IS REQUIRED IN PLACE OF IIJ4 A CABLE ON THE LAST UNIT IN A DAISY CHAIN CONFIGURATION AND ON ALL UNITS IN A STAR CONFIGURATION.

APPLICABLE TO 60 PIN I/O

DRAWN	G Rabink	9/27/76	CONTROL DATA CORPORATION	CHANNEL II I/O DIAGRAMS	CODE IDENT 19333	C	83322240	K	B
CHECKED									
ENGINEER			NORMANDALE DIVISION	TYPE BXYV LOC A2D2	CROSS REF NO. 241	SHEET 1 OF 3	PAGE 1-157		
APPROVED									

REF 83214824

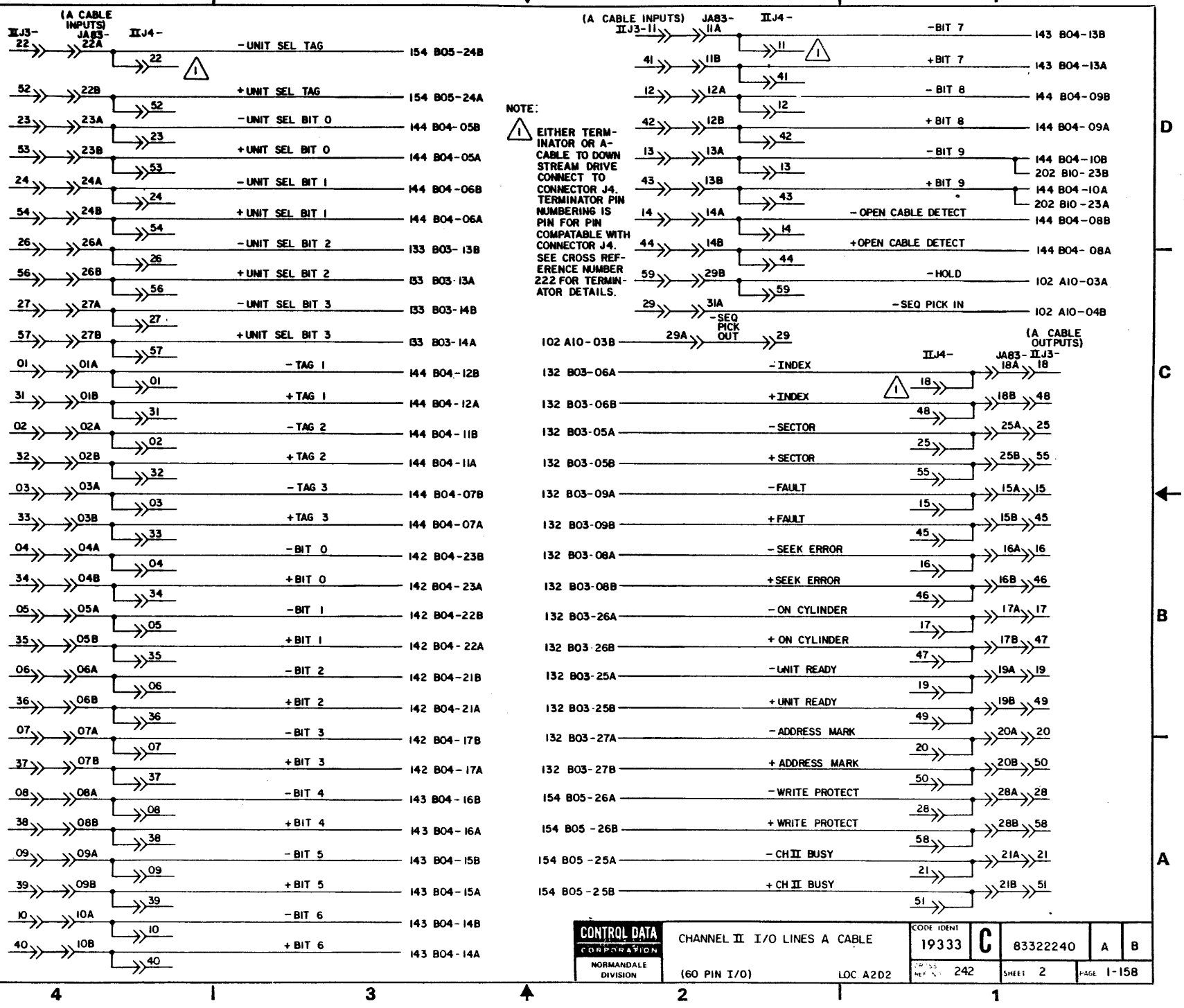
(A CABLE INPUTS) IIJ3- JA83- IIJ4-
22 22A 22
-UNIT SEL TAG 154 B05-24B
52 22B 52
+UNIT SEL TAG 154 B05-24A
23 23A 23
-UNIT SEL BIT 0 144 B04-05B
53 23B 53
+UNIT SEL BIT 0 144 B04-05A
24 24A 24
-UNIT SEL BIT 1 144 B04-06B
54 24B 54
+UNIT SEL BIT 1 144 B04-06A
26 26A 26
-UNIT SEL BIT 2 133 B03-13B
56 26B 56
+UNIT SEL BIT 2 133 B03-13A
27 27A 27
-UNIT SEL BIT 3 133 B03-14B
57 27B 57
+UNIT SEL BIT 3 133 B03-14A
01 01A 01
-TAG 1 144 B04-12B
31 01B 31
+TAG 1 144 B04-12A
02 02A 02
-TAG 2 144 B04-11B
32 02B 32
+TAG 2 144 B04-11A
03 03A 03
-TAG 3 144 B04-07B
33 03B 33
+TAG 3 144 B04-07A
04 04A 04
-BIT 0 142 B04-23B
34 04B 34
+BIT 0 142 B04-23A
05 05A 05
-BIT 1 142 B04-22B
35 05B 35
+BIT 1 142 B04-22A
06 06A 06
-BIT 2 142 B04-21B
36 06B 36
+BIT 2 142 B04-21A
07 07A 07
-BIT 3 142 B04-17B
37 07B 37
+BIT 3 142 B04-17A
08 08A 08
-BIT 4 143 B04-16B
38 08B 38
+BIT 4 143 B04-16A
09 09A 09
-BIT 5 143 B04-15B
39 09B 39
+BIT 5 143 B04-15A
10 10A 10
-BIT 6 143 B04-14B
40 10B 40
+BIT 6 143 B04-14A
(A CABLE INPUTS) IIJ3- JA83- IIJ4-
11 11A 11
-BIT 7 143 B04-13B
41 11B 41
+BIT 7 143 B04-13A
12 12A 12
-BIT 8 144 B04-09B
42 12B 42
+BIT 8 144 B04-09A
13 13A 13
-BIT 9 144 B04-10B
202 B10-23B
43 13B 43
+BIT 9 144 B04-10A
202 B10-23A
14 14A 14
-OPEN CABLE DETECT 144 B04-08B
44 14B 44
+OPEN CABLE DETECT 144 B04-08A
59 29B 59
-HOLD 102 A10-03A
29 31A
-SEQ PICK IN 102 A10-04B
102 A10-03B 29A
-SEQ PICK OUT 29
NOTE:
1 EITHER TERMINATOR OR A-CABLE TO DOWN STREAM DRIVE CONNECT TO CONNECTOR J4. TERMINATOR PIN NUMBERING IS PIN FOR PIN COMPATABLE WITH CONNECTOR J4. SEE CROSS REFERENCE NUMBER 222 FOR TERMINATOR DETAILS.
(A CABLE OUTPUTS) IIJ4- JA83- IIJ3-
18 18A 18
-INDEX 132 B03-06A
18B 48
+INDEX 132 B03-06B
25A 25
-SECTOR 132 B03-05A
25B 55
+SECTOR 132 B03-05B
15A 15
-FAULT 132 B03-09A
15B 45
+FAULT 132 B03-09B
16A 16
-SEEK ERROR 132 B03-08A
16B 46
+SEEK ERROR 132 B03-08B
17A 17
-ON CYLINDER 132 B03-26A
17B 47
+ON CYLINDER 132 B03-26B
19A 19
-UNIT READY 132 B03-25A
19B 49
+UNIT READY 132 B03-25B
20A 20
-ADDRESS MARK 132 B03-27A
20B 50
+ADDRESS MARK 132 B03-27B
28A 28
-WRITE PROTECT 154 B05-26A
28B 58
+WRITE PROTECT 154 B05-26B
21A 21
-CH II BUSY 154 B05-25A
21B 51
+CH II BUSY 154 B05-25B
CONTROL DATA CORPORATION
NORMANDALE DIVISION
CHANNEL II I/O LINES A CABLE
(60 PIN I/O)
LOC A2D2
CODE IDENT 19333
C
83322240
A
B
242
SHEET 2
PAGE 1-158

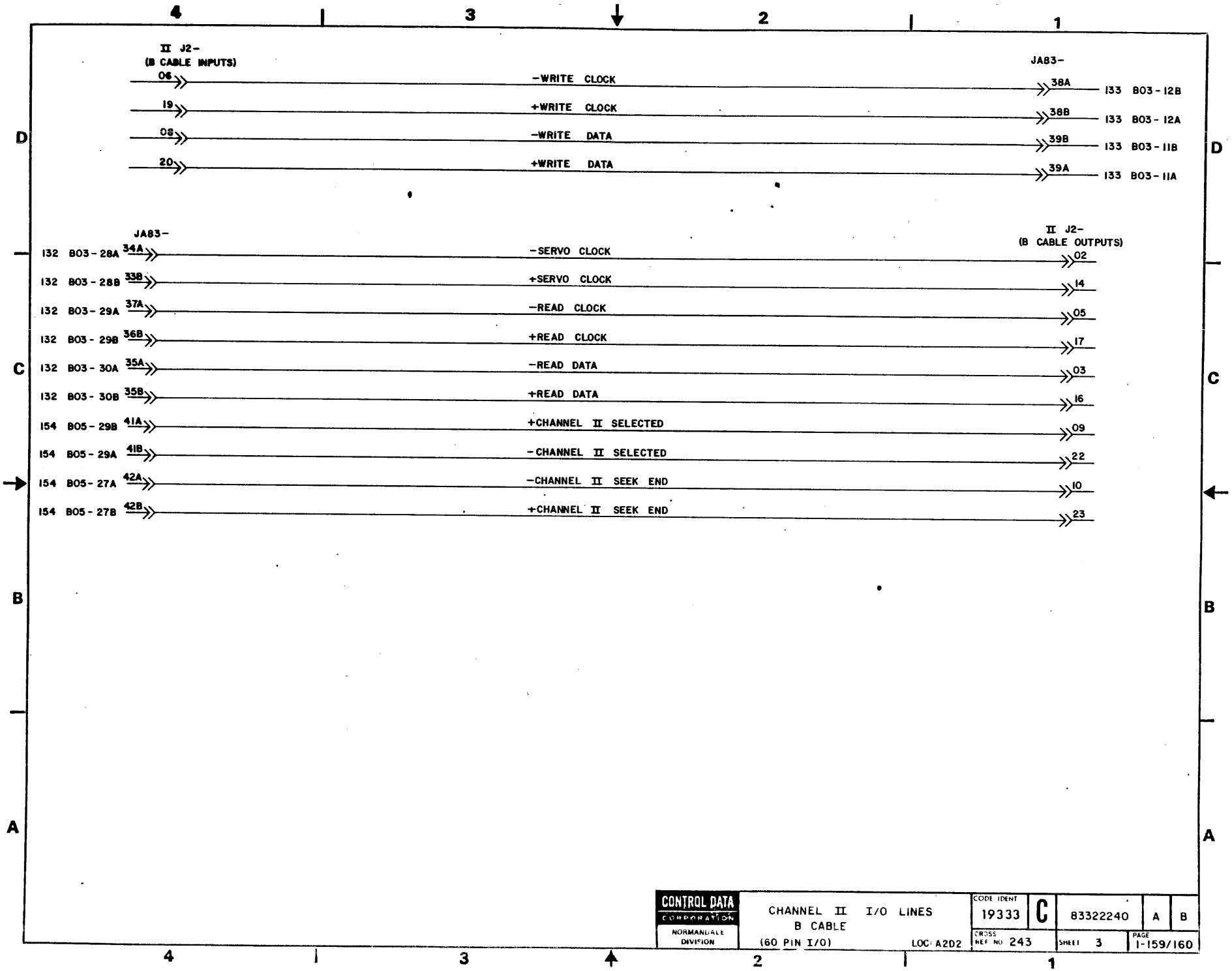
II J2-
(B CABLE INPUTS)
06
-WRITE CLOCK
JA83-
38A
133 B03-12B
19
+WRITE CLOCK
38B
133 B03-12A
08
-WRITE DATA
39B
133 B03-11B
20
+WRITE DATA
39A
133 B03-11A
JA83-
II J2-
(B CABLE OUTPUTS)
132 B03-28A 34A
-SERVO CLOCK
02
132 B03-28B 33B
+SERVO CLOCK
14
132 B03-29A 37A
-READ CLOCK
05
132 B03-29B 36B
+READ CLOCK
17
132 B03-30A 35A
-READ DATA
03
132 B03-30B 35B
+READ DATA
16
154 B05-29B 41A
+CHANNEL II SELECTED
09
154 B05-29A 41B
-CHANNEL II SELECTED
22
154 B05-27A 42A
-CHANNEL II SEEK END
10
154 B05-27B 42B
+CHANNEL II SEEK END
23
CONTROL DATA CORPORATION
NORMANDALE DIVISION
CHANNEL II I/O LINES
B CABLE
(60 PIN I/O)
LOC: A2D2
CODE IDENT 19333
C
83322240
A
B
CROSS REF NO 243
SHEET 3
PAGE 1-159/160

REVISION STATUS OF SHEETS

1	2	3	4	5	6	7	8	9	10	11	12	13	14	15	16	17	18	19	20
A	A	A																	
B	B	B																	

REVISIONS

REV	ECO	DESCRIPTION	DRFT	DATE	CHK'D
A	PE23000	RELEASED			
B	PE48402	CO-R DIAG			

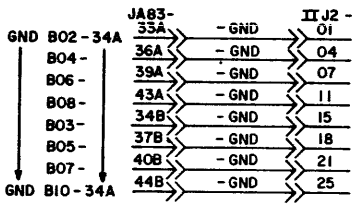

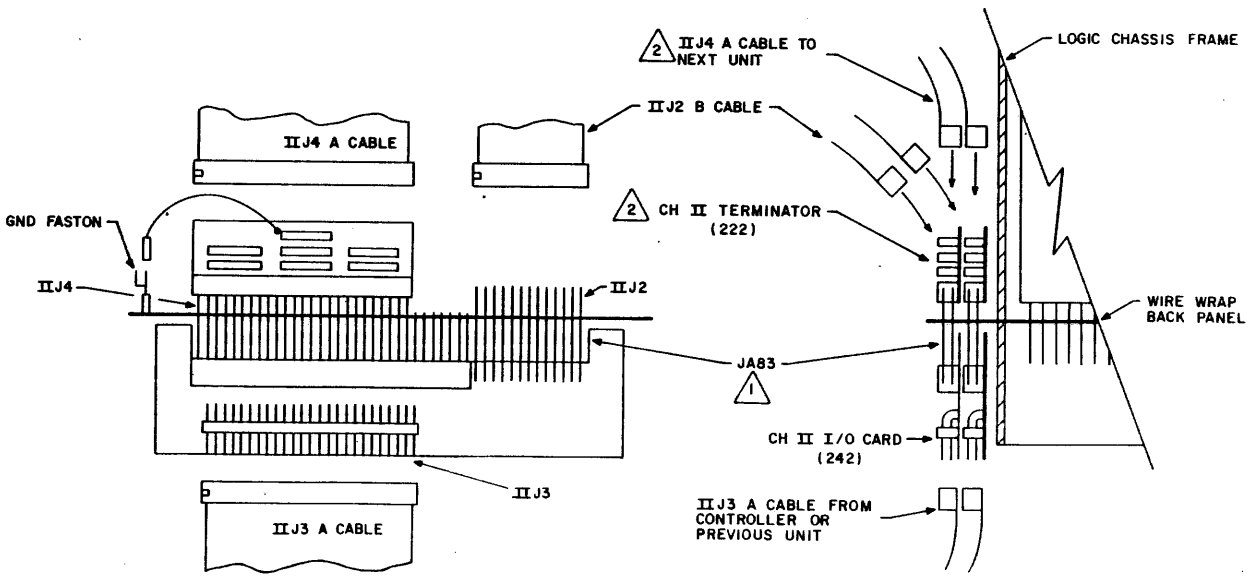

NOTE

1. FEED THROUGH W/W PINS MAKE CONTACT TO BOTH, TERMINATOR AND I/O CARD.
2. TERMINATOR IS REQUIRED IN PLACE OF IIJ4 A CABLE ON THE LAST UNIT IN A DAISY CHAIN CONFIGURATION AND ON ALL UNITS IN A STAR CONFIGURATION.

APPLICABLE TO 50 PIN I/O

DRAWN		CONTROL DATA FORTRAN NORMANDALE DIVISION	CHANNEL II I/O DIAGRAMS	CODE IDENT 19333	C	83322240	K B
CHECKED							
ENGINEER							
APPROVED			TYPE DXYV LOC A2D2	ENGR REV NO 241	SHEET 1 OF 3	PAGE 1-161	

REF 83214845

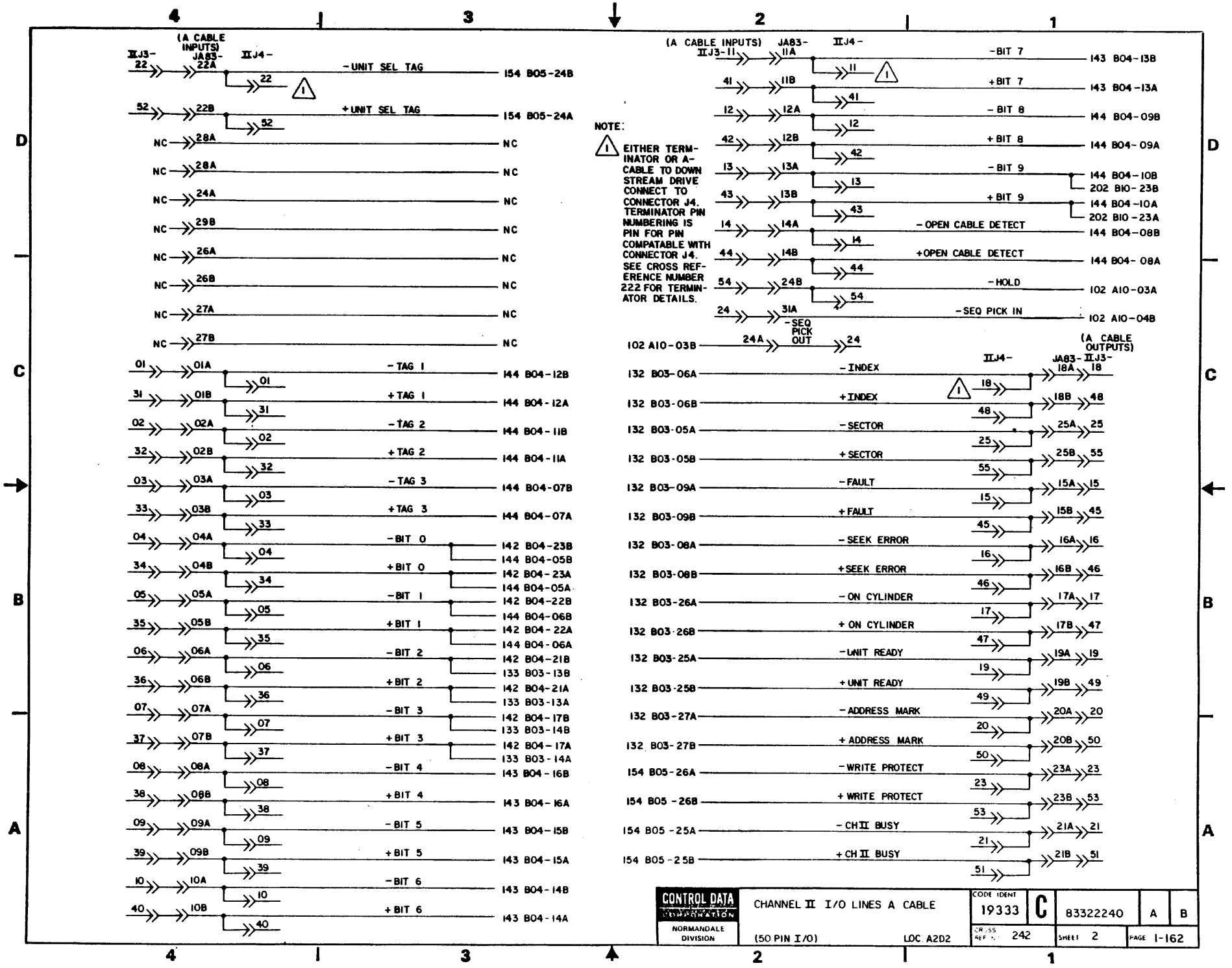
(A CABLE INPUTS) IIJ3- JA83- IIJ4-
22 22A 22
-UNIT SEL TAG 154 B05-24B
52 22B 52
+UNIT SEL TAG 154 B05-24A
NC 28A NC
NC 28A NC
NC 24A NC
NC 29B NC
NC 26A NC
NC 26B NC
NC 27A NC
NC 27B NC
01 01A 01
-TAG 1 144 B04-12B
31 01B 31
+TAG 1 144 B04-12A
02 02A 02
-TAG 2 144 B04-11B
32 02B 32
+TAG 2 144 B04-11A
03 03A 03
-TAG 3 144 B04-07B
33 03B 33
+TAG 3 144 B04-07A
04 04A 04
-BIT 0 142 B04-23B 144 B04-05B
34 04B 34
+BIT 0 142 B04-23A 144 B04-05A
05 05A 05
-BIT 1 142 B04-22B 144 B04-06B
35 05B 35
+BIT 1 142 B04-22A 144 B04-06A
06 06A 06
-BIT 2 142 B04-21B 133 B03-13B
36 06B 36
+BIT 2 142 B04-21A 133 B03-13A
07 07A 07
-BIT 3 142 B04-17B 133 B03-14B
37 07B 37
+BIT 3 142 B04-17A 133 B03-14A
08 08A 08
-BIT 4 143 B04-16B
38 08B 38
+BIT 4 143 B04-16A
09 09A 09
-BIT 5 143 B04-15B
39 09B 39
+BIT 5 143 B04-15A
10 10A 10
-BIT 6 143 B04-14B
40 10B 40
+BIT 6 143 B04-14A
NOTE:
1 EITHER TERMINATOR OR A-CABLE TO DOWN STREAM DRIVE CONNECT TO CONNECTOR J4. TERMINATOR PIN NUMBERING IS PIN FOR PIN COMPATABLE WITH CONNECTOR J4. SEE CROSS REFERENCE NUMBER 222 FOR TERMINATOR DETAILS.
(A CABLE INPUTS) IIJ3- JA83- IIJ4-
11 11A 11
-BIT 7 143 B04-13B
41 11B 41
+BIT 7 143 B04-13A
12 12A 12
-BIT 8 144 B04-09B
42 12B 42
+BIT 8 144 B04-09A
13 13A 13
-BIT 9 144 B04-10B 202 B10-23B
43 13B 43
+BIT 9 144 B04-10A 202 B10-23A
14 14A 14
-OPEN CABLE DETECT 144 B04-08B
44 14B 44
+OPEN CABLE DETECT 144 B04-08A
54 24B 54
-HOLD 102 A10-03A
24 31A
-SEQ PICK IN 102 A10-04B
102 A10-03B 24A
-SEQ PICK OUT 24
(A CABLE OUTPUTS) IIJ4- JA83- IIJ3-
132 B03-06A -INDEX 18 18A 18
132 B03-06B +INDEX 48 18B 48
132 B03-05A -SECTOR 25 25A 25
132 B03-05B +SECTOR 55 25B 55
132 B03-09A -FAULT 15 15A 15
132 B03-09B +FAULT 45 15B 45
132 B03-08A -SEEK ERROR 16 16A 16
132 B03-08B +SEEK ERROR 46 16B 46
132 B03-26A -ON CYLINDER 17 17A 17
132 B03-26B +ON CYLINDER 47 17B 47
132 B03-25A -UNIT READY 19 19A 19
132 B03-25B +UNIT READY 49 19B 49
132 B03-27A -ADDRESS MARK 20 20A 20
132 B03-27B +ADDRESS MARK 50 20B 50
154 B05-26A -WRITE PROTECT 23 23A 23
154 B05-26B +WRITE PROTECT 53 23B 53
154 B05-25A -CH II BUSY 21 21A 21
154 B05-25B +CH II BUSY 51 21B 51
CONTROL DATA CORPORATION
NORMANDALE DIVISION
CHANNEL II I/O LINES A CABLE
(50 PIN I/O)
LOC A2D2
CODE IDENT 19333
C
83322240
A
B
CROSS REF. 242
SHEET 2
PAGE 1-162

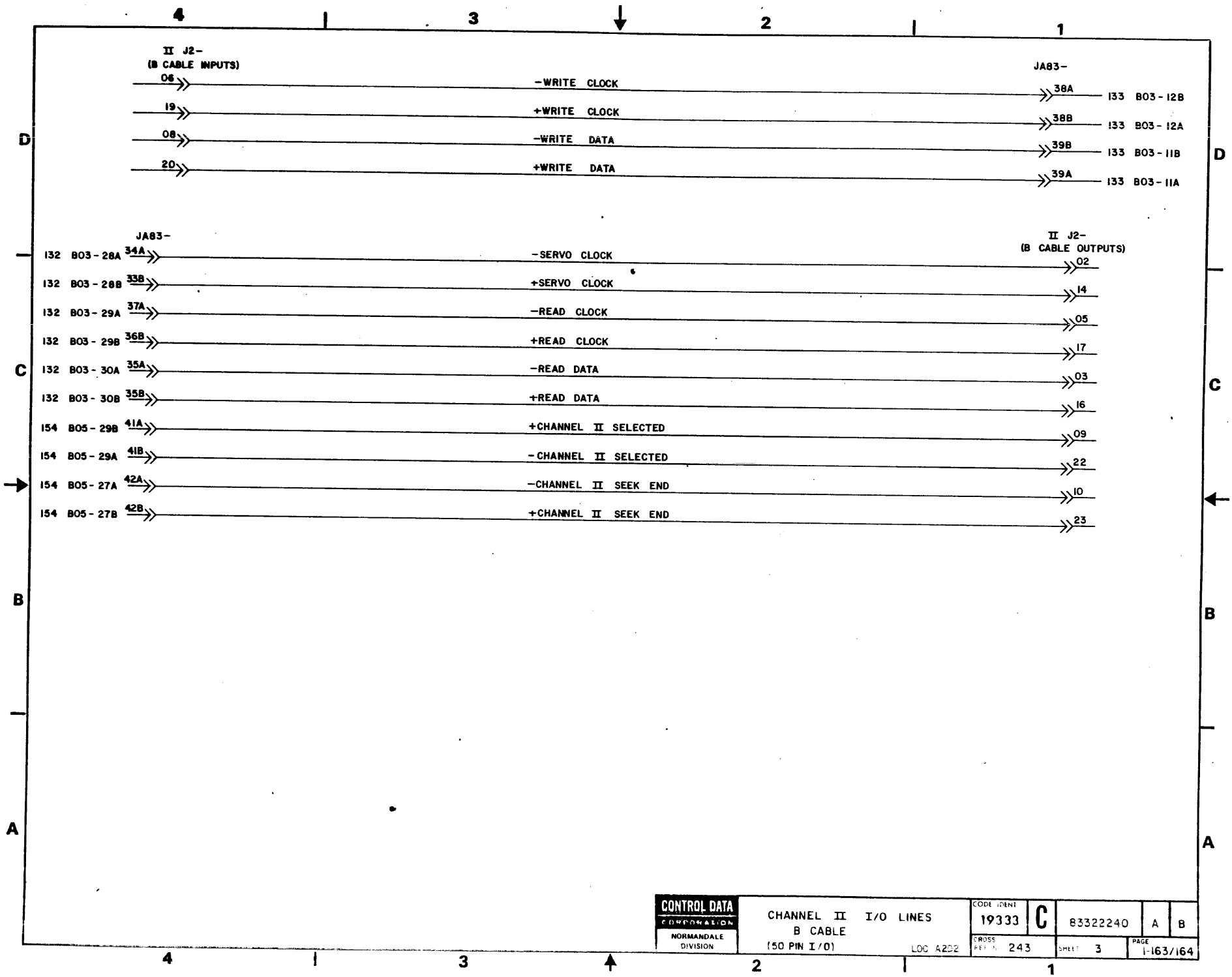

CONTROL DATA CORPORATION NORMANDALE DIVISION	CHANNEL II I/O LINES B CABLE (50 PIN I/O) LOC A202	CODE IDENT 19333	C	83322240	A	B
		CROSS REF N. 243		SHEET 3	PAGE 1-163/164	

REVISION STATUS OF SHEETS

1	2	3	4	5	6	7	8	9	10	11	12	13	14	15	16	17	18	19	20
A	A	A																	
B	B	B																	

REVISIONS

REV	ECO	DESCRIPTION	DRFT	DATE	CHK'D
A	PE23000	RELEASED			
B	PE48402	CORRECT DIAGRAMS	WEB	12-17-76	

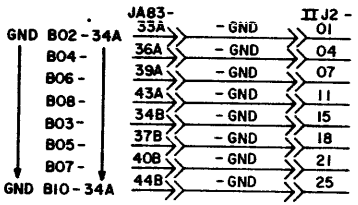

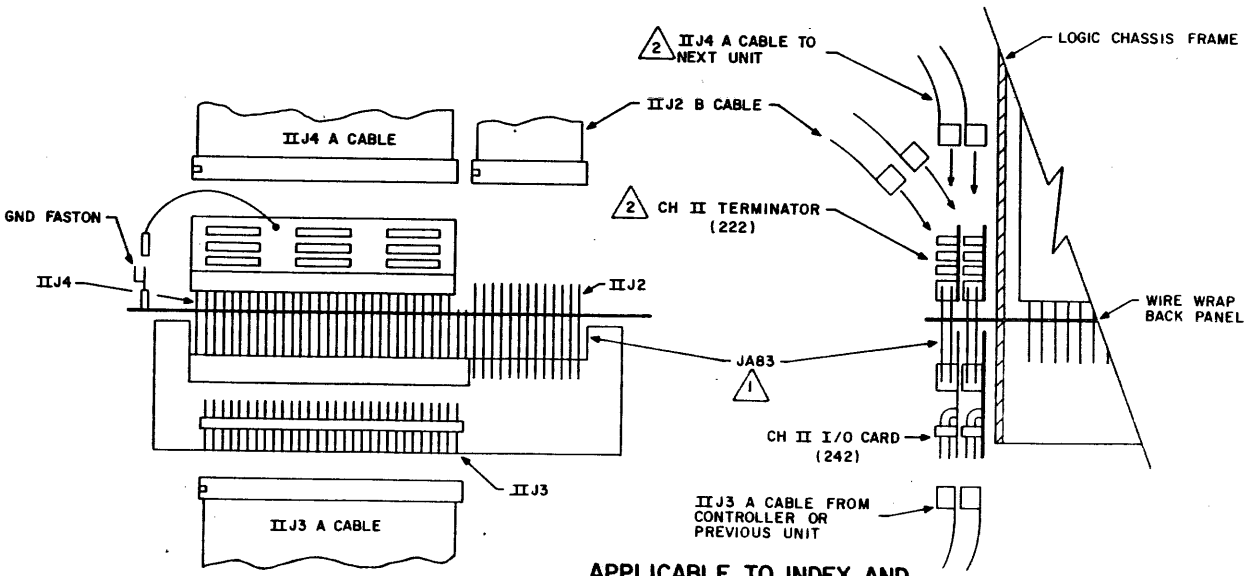

APPLICABLE TO INDEX AND SECTOR IN B CABLE

NOTE:

1. FEED THROUGH W/W PINS MAKE CONTACT TO BOTH, TERMINATOR AND I/O CARD
2. TERMINATOR IS REQUIRED IN PLACE OF IIJ4 A CABLE ON THE LAST UNIT IN A DAISY CHAIN CONFIGURATION AND ON ALL UNITS IN A STAR CONFIGURATION

DRAWN	G. Rabine	9/27/76
CHECKED		
ENGINEER		
APPROVED		

CONTROL DATA CORPORATION
NORMANDALE DIVISION

CHANNEL II I/O DIAGRAMS
TYPE BXYV LOC A2D2

CODE IDENT				
19333	C	83322240	K	B
CROSS REF NO. 241	SHEET 1 OF 3	PAGE 1-165		

REF 83214851

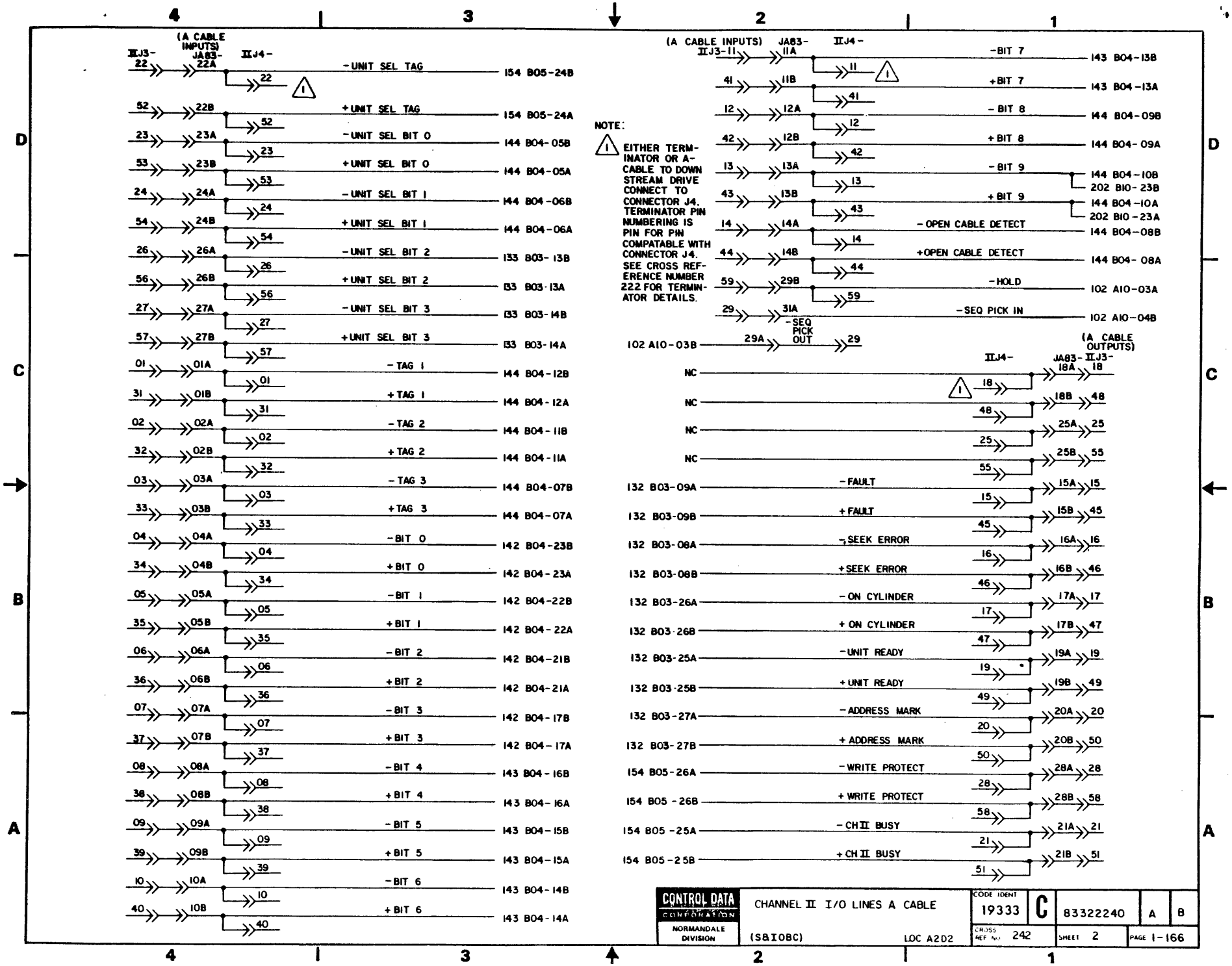
(A CABLE INPUTS) JA83- IIJ3- IIJ4-
22 22A 22 -UNIT SEL TAG 154 B05-24B
52 22B 52 +UNIT SEL TAG 154 B05-24A
23 23A 23 -UNIT SEL BIT 0 144 B04-05B
53 23B 53 +UNIT SEL BIT 0 144 B04-05A
24 24A 24 -UNIT SEL BIT 1 144 B04-06B
54 24B 54 +UNIT SEL BIT 1 144 B04-06A
26 26A 26 -UNIT SEL BIT 2 133 B03-13B
56 26B 56 +UNIT SEL BIT 2 133 B03-13A
27 27A 27 -UNIT SEL BIT 3 133 B03-14B
57 27B 57 +UNIT SEL BIT 3 133 B03-14A
01 01A 01 -TAG 1 144 B04-12B
31 01B 31 +TAG 1 144 B04-12A
02 02A 02 -TAG 2 144 B04-11B
32 02B 32 +TAG 2 144 B04-11A
03 03A 03 -TAG 3 144 B04-07B
33 03B 33 +TAG 3 144 B04-07A
04 04A 04 -BIT 0 142 B04-23B
34 04B 34 +BIT 0 142 B04-23A
05 05A 05 -BIT 1 142 B04-22B
35 05B 35 +BIT 1 142 B04-22A
06 06A 06 -BIT 2 142 B04-21B
36 06B 36 +BIT 2 142 B04-21A
07 07A 07 -BIT 3 142 B04-17B
37 07B 37 +BIT 3 142 B04-17A
08 08A 08 -BIT 4 143 B04-16B
38 08B 38 +BIT 4 143 B04-16A
09 09A 09 -BIT 5 143 B04-15B
39 09B 39 +BIT 5 143 B04-15A
10 10A 10 -BIT 6 143 B04-14B
40 10B 40 +BIT 6 143 B04-14A
(A CABLE INPUTS) IIJ3-11 JA83- IIA IIJ4-
11 -BIT 7 143 B04-13B
41 11B 41 +BIT 7 143 B04-13A
12 12A 12 -BIT 8 144 B04-09B
42 12B 42 +BIT 8 144 B04-09A
13 13A 13 -BIT 9 144 B04-10B 202 B10-23B
43 13B 43 +BIT 9 144 B04-10A 202 B10-23A
14 14A 14 -OPEN CABLE DETECT 144 B04-08B
44 14B 44 +OPEN CABLE DETECT 144 B04-08A
59 29B 59 -HOLD 102 A10-03A
29 31A -SEQ PICK IN 102 A10-04B
102 A10-03B 29A -SEQ PICK OUT 29
NOTE:
1 EITHER TERMINATOR OR A-CABLE TO DOWN STREAM DRIVE CONNECT TO CONNECTOR J4. TERMINATOR PIN NUMBERING IS PIN FOR PIN COMPATABLE WITH CONNECTOR J4. SEE CROSS REFERENCE NUMBER 222 FOR TERMINATOR DETAILS.
(A CABLE OUTPUTS) IIJ4- JA83- IIJ3-
NC 18 18A 18
NC 48 18B 48
NC 25 25A 25
NC 55 25B 55
132 B03-09A -FAULT 15 15A 15
132 B03-09B +FAULT 45 15B 45
132 B03-08A -SEEK ERROR 16 16A 16
132 B03-08B +SEEK ERROR 46 16B 46
132 B03-26A -ON CYLINDER 17 17A 17
132 B03-26B +ON CYLINDER 47 17B 47
132 B03-25A -UNIT READY 19 19A 19
132 B03-25B +UNIT READY 49 19B 49
132 B03-27A -ADDRESS MARK 20 20A 20
132 B03-27B +ADDRESS MARK 50 20B 50
154 B05-26A -WRITE PROTECT 28 28A 28
154 B05-26B +WRITE PROTECT 58 28B 58
154 B05-25A -CH II BUSY 21 21A 21
154 B05-25B +CH II BUSY 51 21B 51
CONTROL DATA CORPORATION
NORMANDALE DIVISION
CHANNEL II I/O LINES A CABLE
(S&IOBC) LOC A2D2
CODE IDENT 19333
C
83322240
A
B
CROSS REF No. 242
SHEET 2
PAGE 1-166

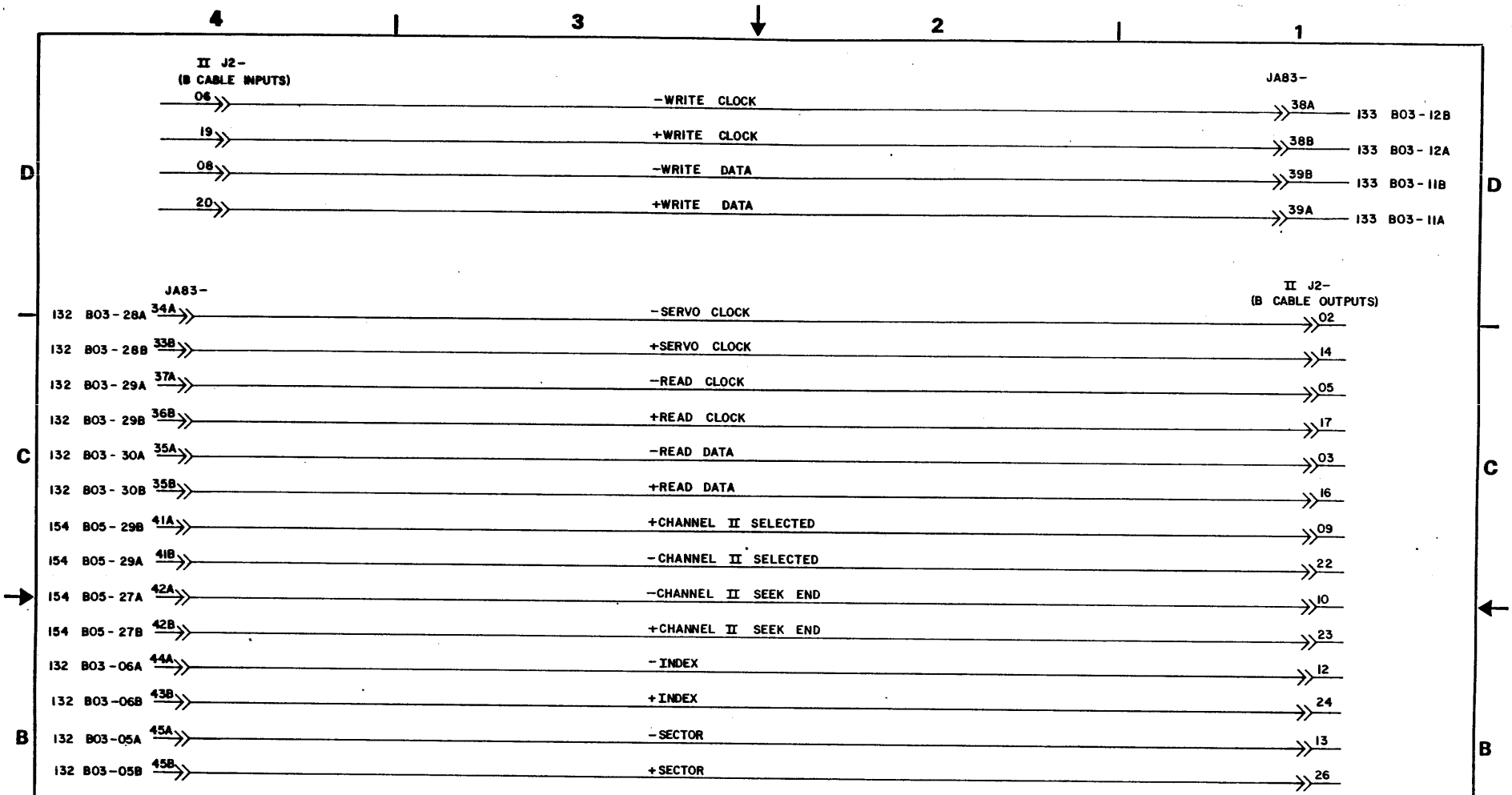

CONTROL DATA CORPORATION
NORMANDALE DIVISION

CHANNEL II I/O LINES
B CABLE
(S&IOBC) LOC A2D2

CODE IDENT 19333 | C | 83322240 | A | B

CROSS REFERENCE 243 | SHEET 3 | PAGE 1-167/168

REVISION STATUS OF SHEETS

1	2	3	4	5	6	7	8	9	10	11	12	13	14	15	16	17	18	19	20
A	A	A																	

REVISIONS

REV	ECO	DESCRIPTION	DRFT	DATE	CHK'D
A	PE23000	RELEASED			

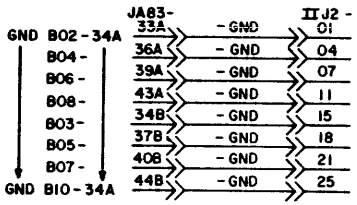

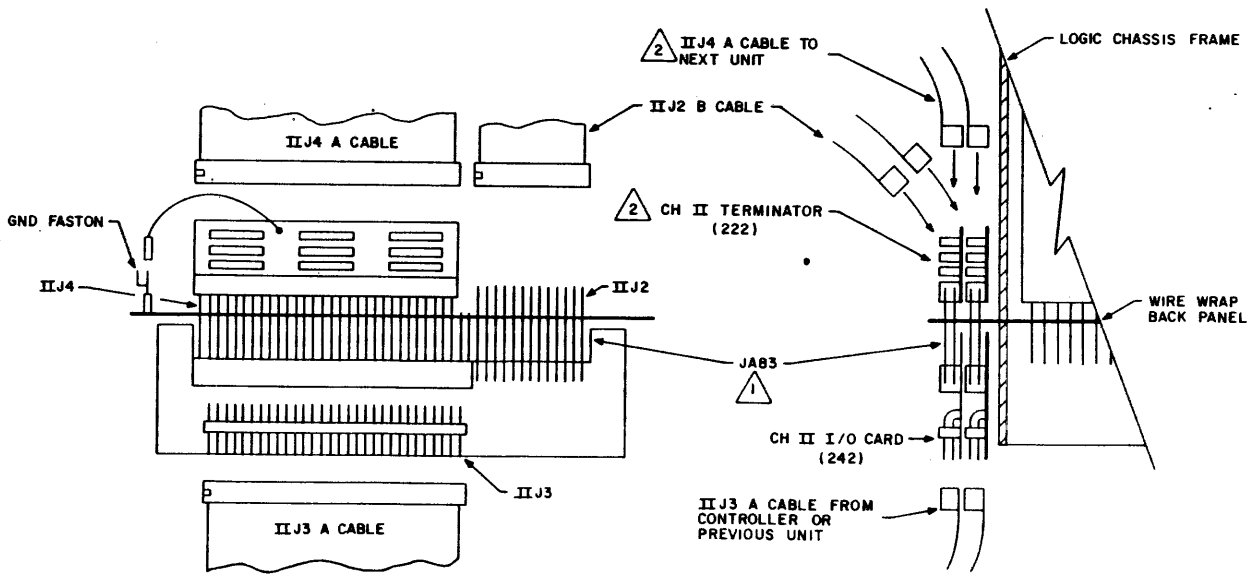

NOTE

1. FEED THROUGH W/W PINS MAKE CONTACT TO BOTH TERMINATOR AND I/O CARD
2. TERMINATOR IS REQUIRED IN PLACE OF IIJ4 A CABLE ON THE LAST UNIT IN A DAISY CHAIN CONFIGURATION AND ON ALL UNITS IN A STAR CONFIGURATION

APPLICABLE TO BK5A7-V,W AND BK5C4-C,D ONLY

DRAWN		CONTROL DATA NORMANDALE DIVISION	A AND B CABLE CHANNEL II I/O DIAGRAMS	CODE IDENT 19333	C	83322240	P A
CHECKED							
ENGINEER			TYPE BXYV LOC A2D2	CROSS REF WO 241		SHEET 1 OF 3	PAGE 1-168.1
APPROVED							

REF 83214857

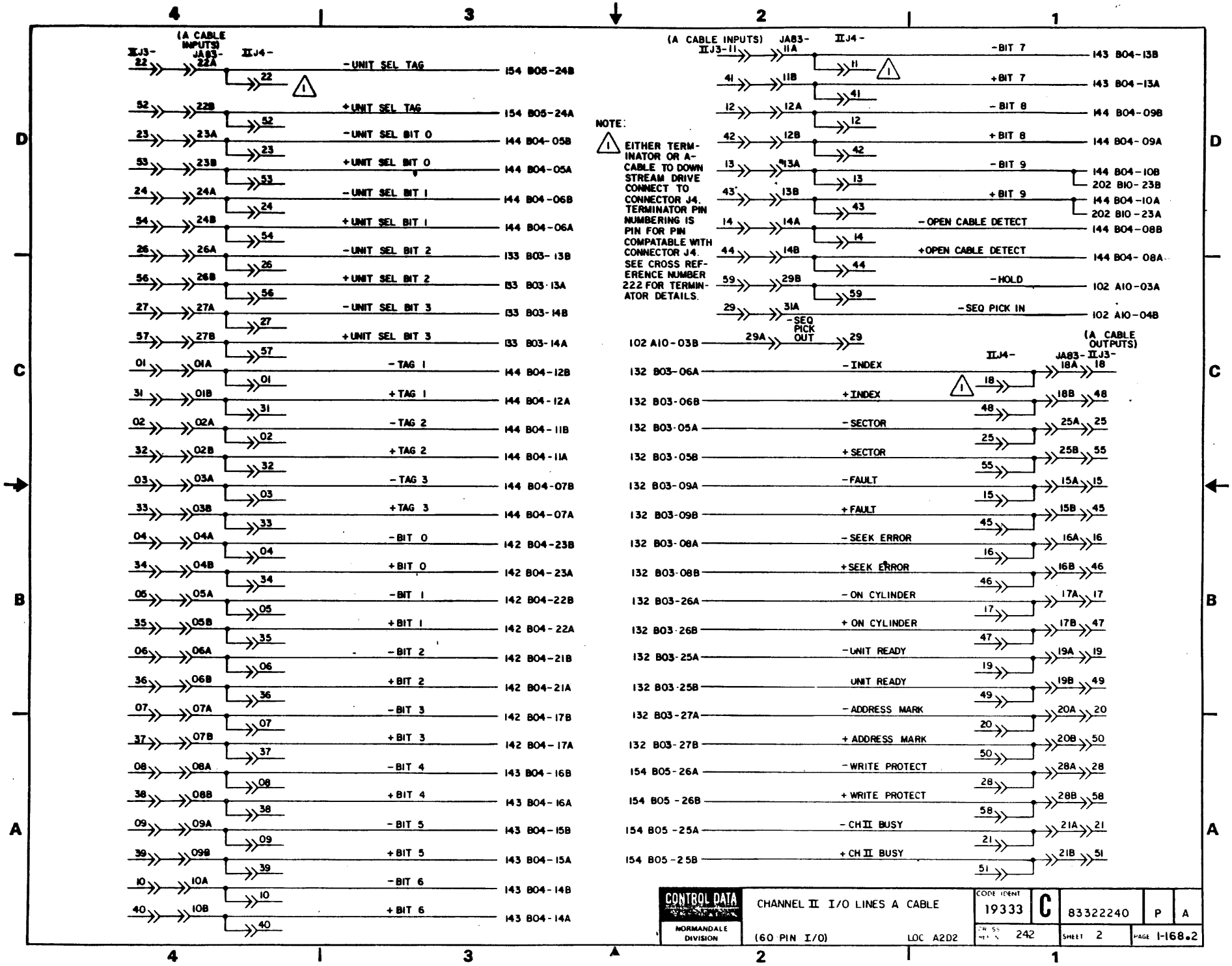
(A CABLE INPUTS) JA83- IIJ3- 22A IIJ4- 22
-UNIT SEL TAG 154 B05-24B
52 22B 52 +UNIT SEL TAG 154 B05-24A
23 23A 23 -UNIT SEL BIT 0 144 B04-05B
53 23B 53 +UNIT SEL BIT 0 144 B04-05A
24 24A 24 -UNIT SEL BIT 1 144 B04-06B
54 24B 54 +UNIT SEL BIT 1 144 B04-06A
26 26A 26 -UNIT SEL BIT 2 133 B03-13B
56 26B 56 +UNIT SEL BIT 2 133 B03-13A
27 27A 27 -UNIT SEL BIT 3 133 B03-14B
57 27B 57 +UNIT SEL BIT 3 133 B03-14A
01 01A 01 -TAG 1 144 B04-12B
31 01B 31 +TAG 1 144 B04-12A
02 02A 02 -TAG 2 144 B04-11B
32 02B 32 +TAG 2 144 B04-11A
03 03A 03 -TAG 3 144 B04-07B
33 03B 33 +TAG 3 144 B04-07A
04 04A 04 -BIT 0 142 B04-23B
34 04B 34 +BIT 0 142 B04-23A
05 05A 05 -BIT 1 142 B04-22B
35 05B 35 +BIT 1 142 B04-22A
06 06A 06 -BIT 2 142 B04-21B
36 06B 36 +BIT 2 142 B04-21A
07 07A 07 -BIT 3 142 B04-17B
37 07B 37 +BIT 3 142 B04-17A
08 08A 08 -BIT 4 143 B04-16B
38 08B 38 +BIT 4 143 B04-16A
09 09A 09 -BIT 5 143 B04-15B
39 09B 39 +BIT 5 143 B04-15A
10 10A 10 -BIT 6 143 B04-14B
40 10B 40 +BIT 6 143 B04-14A
(A CABLE INPUTS) IIJ3-11 JA83- 11A IIJ4- 11 -BIT 7 143 B04-13B
41 11B 41 +BIT 7 143 B04-13A
12 12A 12 -BIT 8 144 B04-09B
42 12B 42 +BIT 8 144 B04-09A
13 13A 13 -BIT 9 144 B04-10B 202 B10-23B
43 13B 43 +BIT 9 144 B04-10A 202 B10-23A
14 14A 14 -OPEN CABLE DETECT 144 B04-08B
44 14B 44 +OPEN CABLE DETECT 144 B04-08A
59 29B 59 -HOLD 102 A10-03A
29 31A -SEQ PICK IN 102 A10-04B
102 A10-03B 29A -SEQ PICK OUT 29
(A CABLE OUTPUTS) JA83- IIJ3- 18A 18 IIJ4- 18
-INDEX 132 B03-06A
+INDEX 132 B03-06B
-SECTOR 132 B03-05A
+SECTOR 132 B03-05B
-FAULT 132 B03-09A
+FAULT 132 B03-09B
-SEEK ERROR 132 B03-08A
+SEEK ERROR 132 B03-08B
-ON CYLINDER 132 B03-26A
+ON CYLINDER 132 B03-26B
-UNIT READY 132 B03-25A
UNIT READY 132 B03-25B
-ADDRESS MARK 132 B03-27A
+ADDRESS MARK 132 B03-27B
-WRITE PROTECT 154 B05-26A
+WRITE PROTECT 154 B05-26B
-CH II BUSY 154 B05-25A
+CH II BUSY 154 B05-25B
NOTE:
1 EITHER TERMINATOR OR A-CABLE TO DOWN STREAM DRIVE CONNECT TO CONNECTOR J4. TERMINATOR PIN NUMBERING IS PIN FOR PIN COMPATABLE WITH CONNECTOR J4. SEE CROSS REFERENCE NUMBER 222 FOR TERMINATOR DETAILS.
CONTROL DATA NORMANDALE DIVISION
CHANNEL II I/O LINES A CABLE
(60 PIN I/O)
LOC A2D2
CODE IDENT 19333
C
83322240
P
A
CH SS REV 242
SHEET 2
PAGE 1-168.2

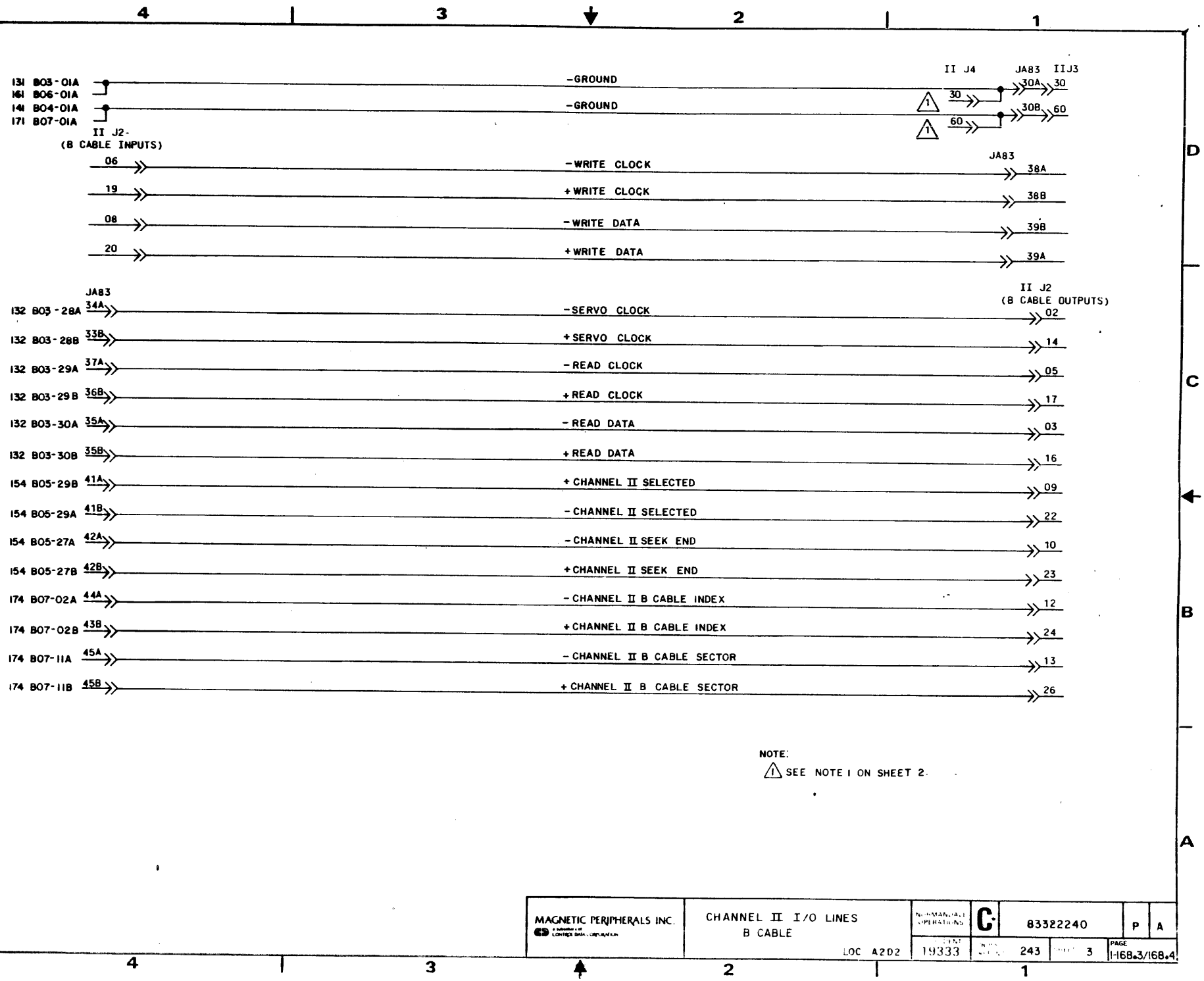
131 B03-01A
161 B06-01A
141 B04-01A
171 B07-01A
II J2-
(B CABLE INPUTS)
-GROUND
-GROUND
II J4
JA83
IIJ3
30A
30
30B
60
1
06
-WRITE CLOCK
19
+WRITE CLOCK
08
-WRITE DATA
20
+WRITE DATA
JA83
38A
38B
39B
39A
JA83
II J2
(B CABLE OUTPUTS)
132 B03-28A 34A
-SERVO CLOCK
02
132 B03-28B 33B
+SERVO CLOCK
14
132 B03-29A 37A
-READ CLOCK
05
132 B03-29B 36B
+READ CLOCK
17
132 B03-30A 35A
-READ DATA
03
132 B03-30B 35B
+READ DATA
16
154 B05-29B 41A
+CHANNEL II SELECTED
09
154 B05-29A 41B
-CHANNEL II SELECTED
22
154 B05-27A 42A
-CHANNEL II SEEK END
10
154 B05-27B 42B
+CHANNEL II SEEK END
23
174 B07-02A 44A
-CHANNEL II B CABLE INDEX
12
174 B07-02B 43B
+CHANNEL II B CABLE INDEX
24
174 B07-11A 45A
-CHANNEL II B CABLE SECTOR
13
174 B07-11B 45B
+CHANNEL II B CABLE SECTOR
26
NOTE:
1 SEE NOTE 1 ON SHEET 2.
MAGNETIC PERIPHERALS INC.
CHANNEL II I/O LINES
B CABLE
LOC A2D2
NUMERICAL CONTROL OPERATIONS
C
83322240
P
A
SIZE
19333
SHEET 243
REV 3
PAGE
1-168.3/168.4

REVISION STATUS OF SHEETS

1	2	3	4	5	6	7	8	9	10	11	12	13	14	15	16	17	18	19	20
A	A																		
B	B																		
C	C																		
D	D																		

REVISIONS

REV.	ECO.	DESCRIPTION	DRFT.	DATE	CHK'D
A	PE 23000	RELEASED	BJE	8-27-76	
B	PE 48296	CORRECT DIAGRAMS	SB	11-2-76	
C	PE48402	CORRECT DIAGRAMS	WEB	12-20-76	
D	PE22854	ERROR CORRECTIONS	MJ	5-29-83	

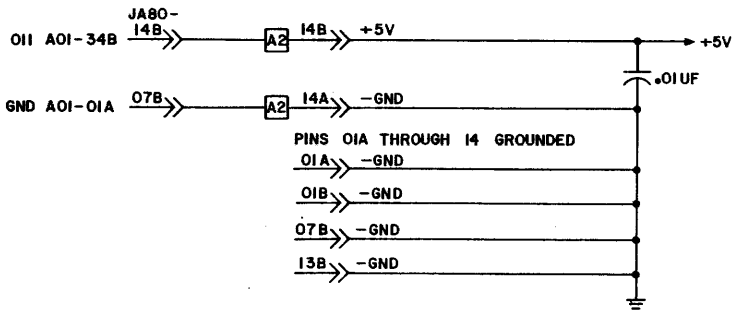

CONTROL PANEL
(COMPONENT LAYOUT)

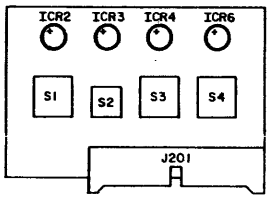

DRAWN		CONTROL DATA CORPORATION	CONTROL PANEL DIAGRAMS	CODE IDENT 19333	C	83322240	Y D
CHECKED							
ENGINEER		NORMANDALE DIVISION	TYPE HZYN LOC A3A01	CROSS REF NO 251	SHEET 1 OF 2	PAGE 1-169	
APPROVED							

REF 83214825

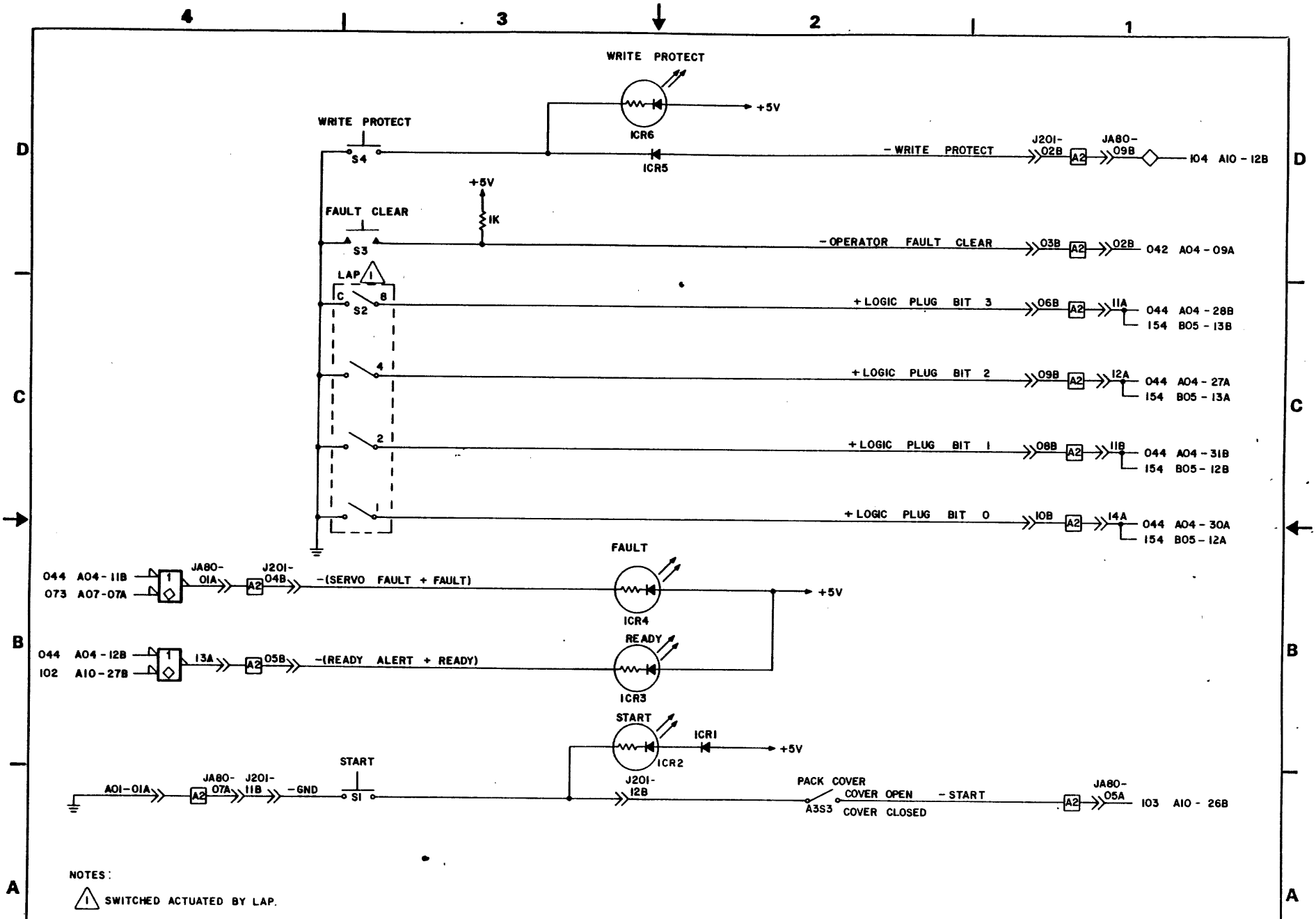

NOTES:

1. SWITCHED ACTUATED BY LAP.

CONTROL DATA CORPORATION NORMANDALE DIVISION	FAULT CLEAR AND LAP SWITCHES, FAULT AND READY INDICATORS LOC: A3A01	CODE IDENT 19333	C	83322240	Y	D
		CROSS REF NO 252		SHEET 2	PAGE 1-170	

REVISIONS					
REV	ECO	DESCRIPTION	DRFT	DATE	CHK'D
A	DJ00399	VDE NEW CREATE	KKB	11-16-82	[illegible]

REVISION STATUS OF SHEETS

1	2	3	4	5	6	7	8	9	10	11	12	13	14	15	16	17	18	19	20
A	A																		

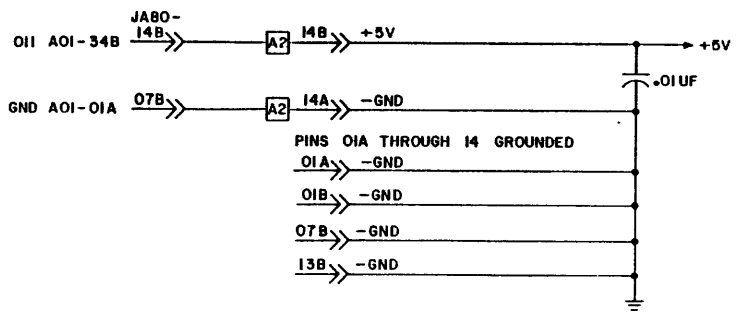

CONTROL PANEL
(COMPONENT LAYOUT)

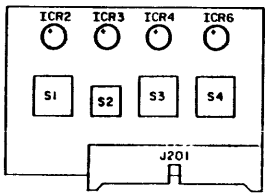

THIS SET USED FOR BK5C6D

DRAWN	K.BARTSCH	11-17-82	CONTROL DATA SMALL DISK DIVISION	CONTROL PANEL DIAGRAMS	CODE IDENT 19333	C	83322240 Z A
CHECKED							
ENGINEER							
APPROVED				TYPE HZYN LOC A3A01	CROSS REF NO 251	SHEET 1 OF 2	SIZE 1-170.1

REF 83214871

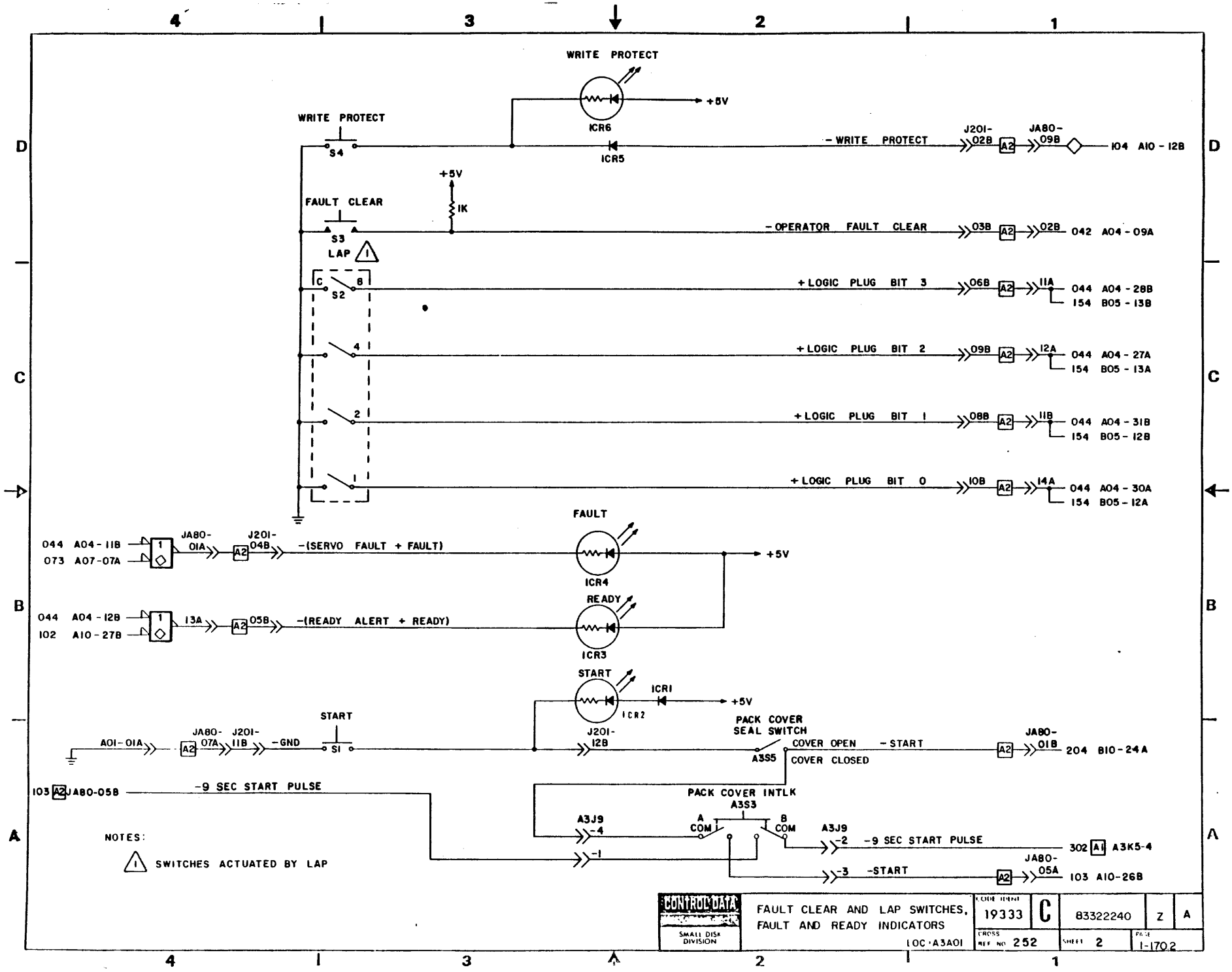
WRITE PROTECT
+5V
ICR6
WRITE PROTECT
S4
ICR5
-WRITE PROTECT
J201-02B
JA80-09B
104 A10-12B
+5V
1K
FAULT CLEAR
S3
-OPERATOR FAULT CLEAR
03B
02B
042 A04-09A
LAP
C
B
S2
+LOGIC PLUG BIT 3
06B
11A
044 A04-28B
154 B05-13B
4
+LOGIC PLUG BIT 2
09B
12A
044 A04-27A
154 B05-13A
2
+LOGIC PLUG BIT 1
08B
11B
044 A04-31B
154 B05-12B
1
+LOGIC PLUG BIT 0
10B
14A
044 A04-30A
154 B05-12A
FAULT
044 A04-11B
073 A07-07A
JA80-01A
J201-04B
-(SERVO FAULT + FAULT)
ICR4
+5V
READY
044 A04-12B
102 A10-27B
13A
05B
-(READY ALERT + READY)
ICR3
START
ICR1
ICR2
+5V
A01-01A
JA80-07A
J201-11B
-GND
S1
J201-12B
PACK COVER SEAL SWITCH
A3S5
COVER OPEN
COVER CLOSED
-START
JA80-01B
204 B10-24A
103 JA80-05B
-9 SEC START PULSE
PACK COVER INTLK
A3S3
A3J9
-4
A
COM
B
COM
A3J9
-2
-9 SEC START PULSE
302 A3K5-4
-1
-3
-START
JA80-05A
103 A10-26B
NOTES:
SWITCHES ACTUATED BY LAP
CONTROL DATA
SMALL DISK DIVISION
FAULT CLEAR AND LAP SWITCHES, FAULT AND READY INDICATORS
LOC·A3A01
CODE IDENT 19333
C
83322240
Z
A
CROSS REF NO 252
SHEET 2
PAGE 1-170.2

REVISION STATUS OF SHEETS

1	2	3	4	5	6	7	8	9	10	11	12	13	14	15	16	17	18	19	20
A	A	A																	
B	A	B																	
C	C	C																	
D	C	D																	
E	C	D																	

REVISIONS

REV.	ECO.	DESCRIPTION	DRFT.	DATE	CHK'D
A	PE 23000	RELEASED	—	—	
B	PE 48296	CORRECT DIAGRAMS	SB	11-2-76	
C	PE 48402	CORRECT DIAGRAMS	GR	12 2076	
D	PE 48523	CORR DIAG.	DM	7-22-77	
E	PE 55229	ADD HYBRID PWR SUP	MA	1-17-79	

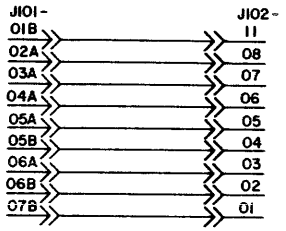

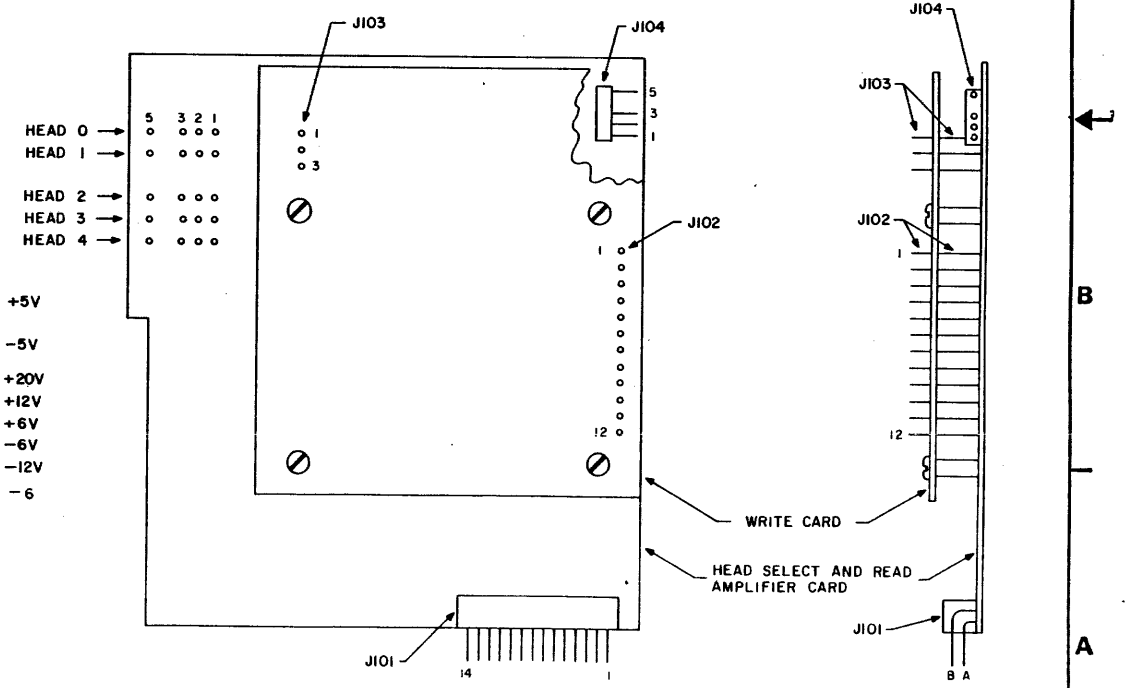

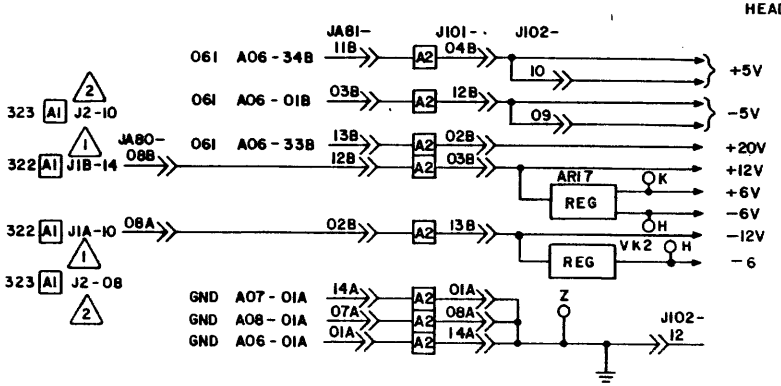

NOTES.

1. USED FOR 3 CARD POWER SUPPLY
2. USED FOR 2 CARD POWER SUPPLY

APPLICABLE TO BK5XX=9762. THIS SET USED FOR REV M & BELOW.

DRAWN	CONTROL DATA CORPORATION	HEAD SELECT AND READ AMPLIFIER DIAGRAMS	CODE IDENT 19333	C	83322240	Y	E
CHECKED							
ENGINEER		TYPE: NZJN LOC A3A02	CROSS REF NO. 261		SHEET 1 OF 3	PAGE 1-171	
APPROVED	NORMANDALE DIVISION						

REF 83214826

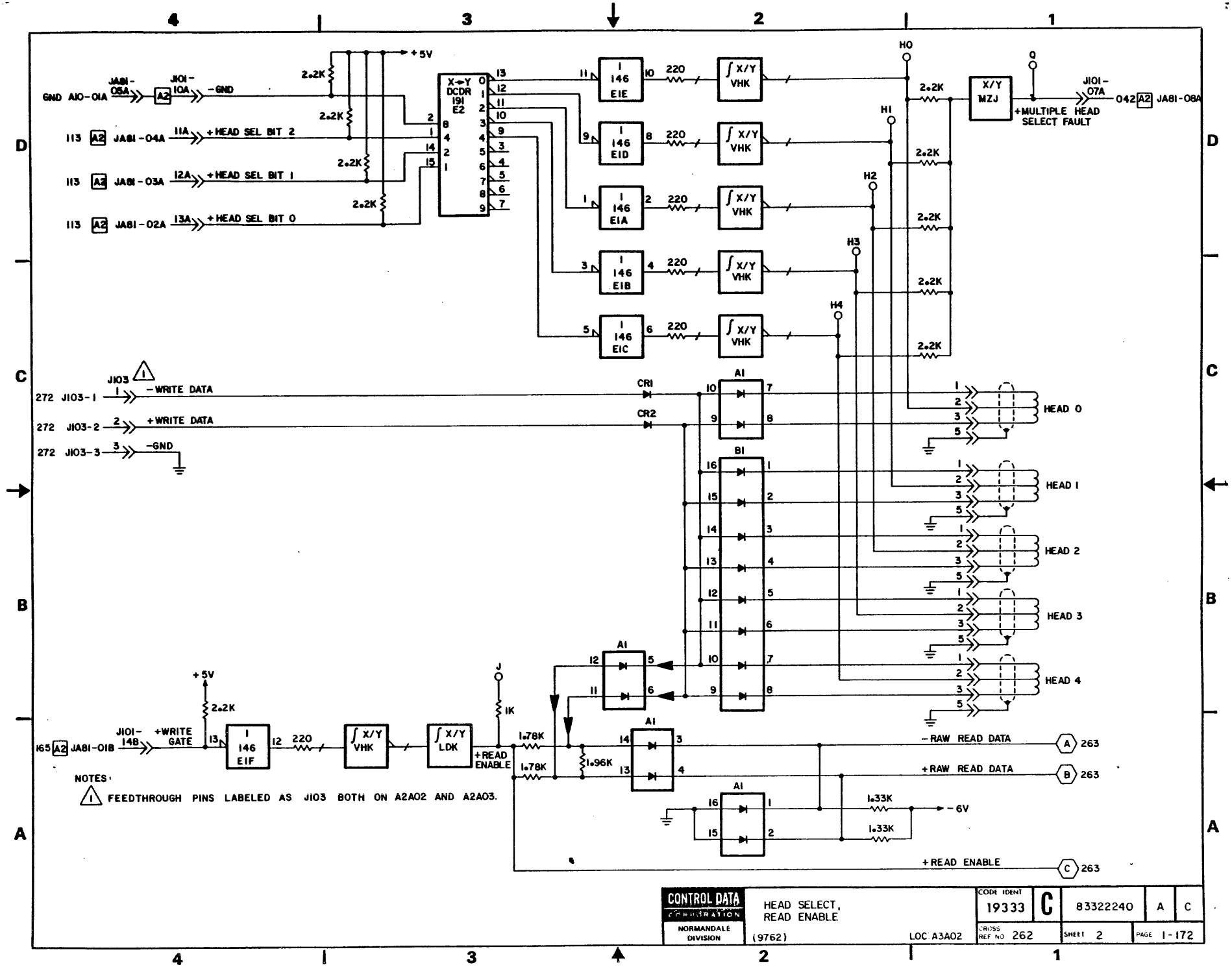

CONTROL DATA CORPORATION NORMANDALE DIVISION	HEAD SELECT, READ ENABLE (9762) LOC A3A02	CODE IDENT 19333	C	83322240	A	C	
		CROSS REF NO 262		SHEET 2	PAGE 1-172		

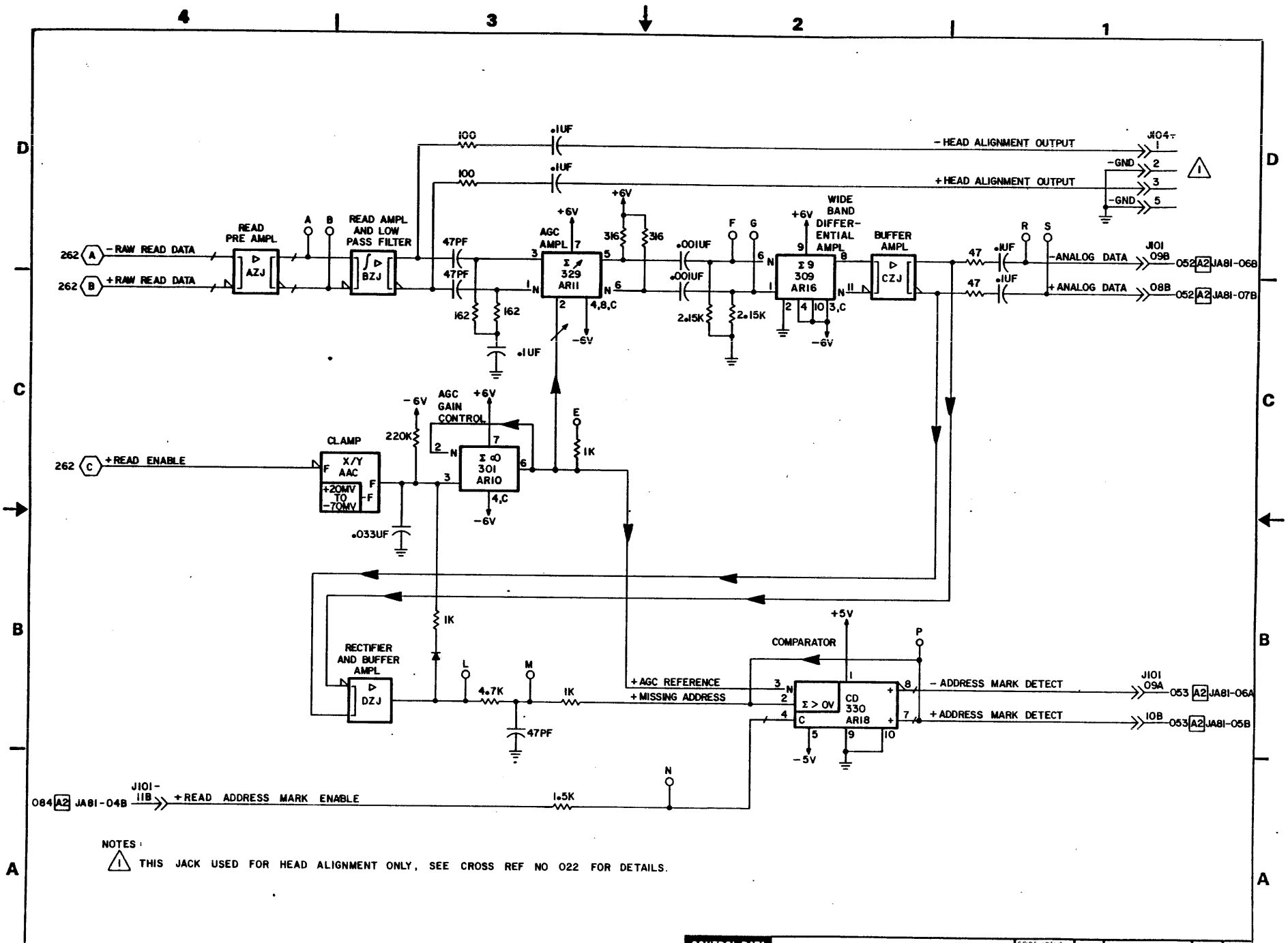

NOTES:

1. THIS JACK USED FOR HEAD ALIGNMENT ONLY, SEE CROSS REF NO 022 FOR DETAILS.

CONTROL DATA CORPORATION NORMANDALE DIVISION	READ AMPLIFIER, ADDRESS MARK DETECTION (9762) LOC A3A02	CODE IDENT 19333	C	83322240	C	D	
		DRAWING REV. NO. 263		SHEET 3	PAGE 1-173/174		

REVISIONS					
REV	ECO	DESCRIPTION	DRFT	DATE	CHK'D
A	PE23000	RELEASED	—		
B	PE48296	ERR. CORR.	MA	11-19-76	
C	PE48402	ERROR CORRECTIONS	VG	1-10-77	
D	PE48523	ERROR CORRECTION	SB	4-6-77	
E	DJ22000	TRANSFER FROM PE	SMS	4-28-82	
F	DJ00335	NZJN REDESIGN	JS	9-24-82	DGD
G	DJ00459	CHANGE LOGIC DIAGRAM - NZJN	KKB	12-22-82	DGD
H	DJ00488	CORRECT NZJN SCH	MJ	3-21-83	
J	DJ00521	CHG NZJN COMP AY	JG	7-24-84	
K	DJ00785	RES CHG NZJN	MR	2-4-85	

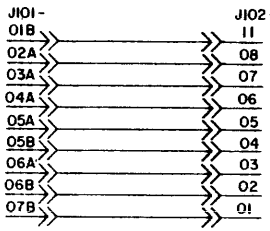

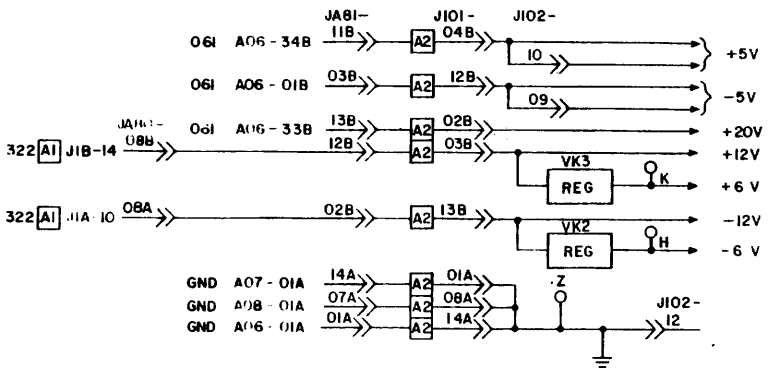

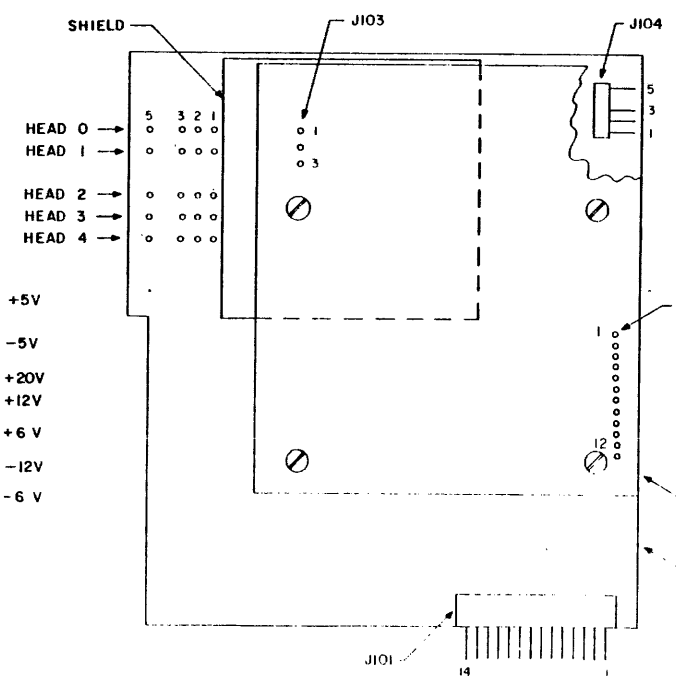

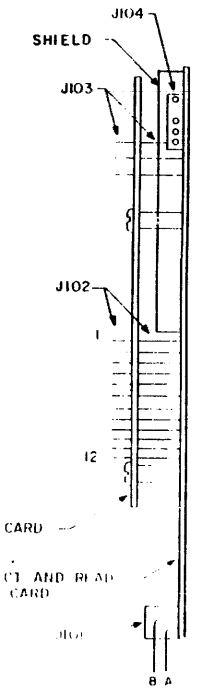

APPLICABLE TO BK5XX=9762, THIS SET USED FOR NZJN REV N & ABOVE.

DRAWN			CONTROL DATA CORPORATION TWIN CITIES DISK DIVISION	HEAD SELECT AND READ AMPLIFIER DIAGRAMS	19333	C	83322240 AA K
CHECKED							
ENGINEER				TYPE NZJN LOC A3AQ2			
APPROVED				REF: 83214826			1-174.1

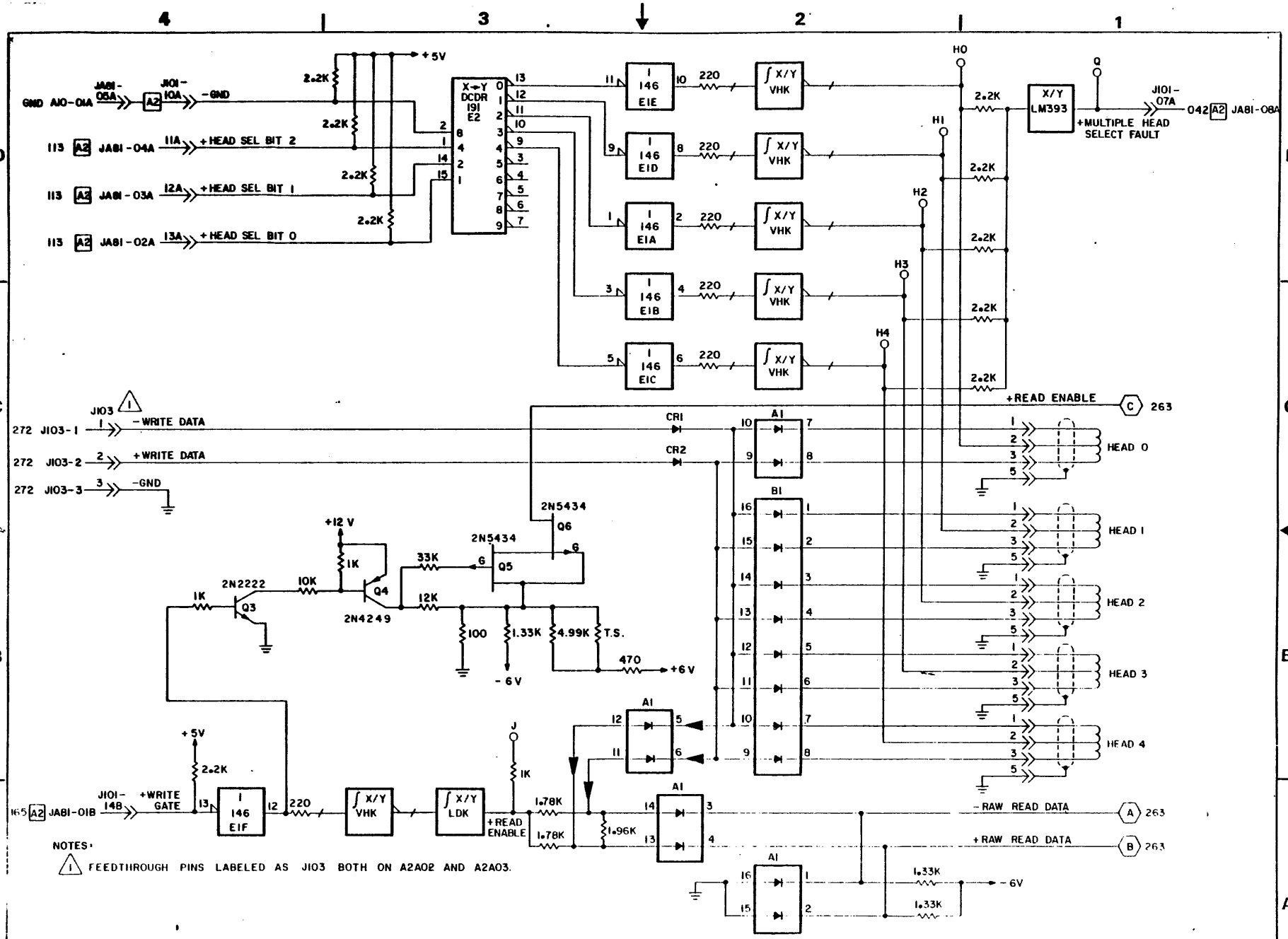

CONTROL DATA	HEAD SELECT, READ ENABLE	CODE IDENT 19333	C	83322240	Y	H
NORMANDALE DIVISION	(9762) LOC A3A02	DRAWING REF NO. 262		SHEET 2	PAGE 1-174.2	

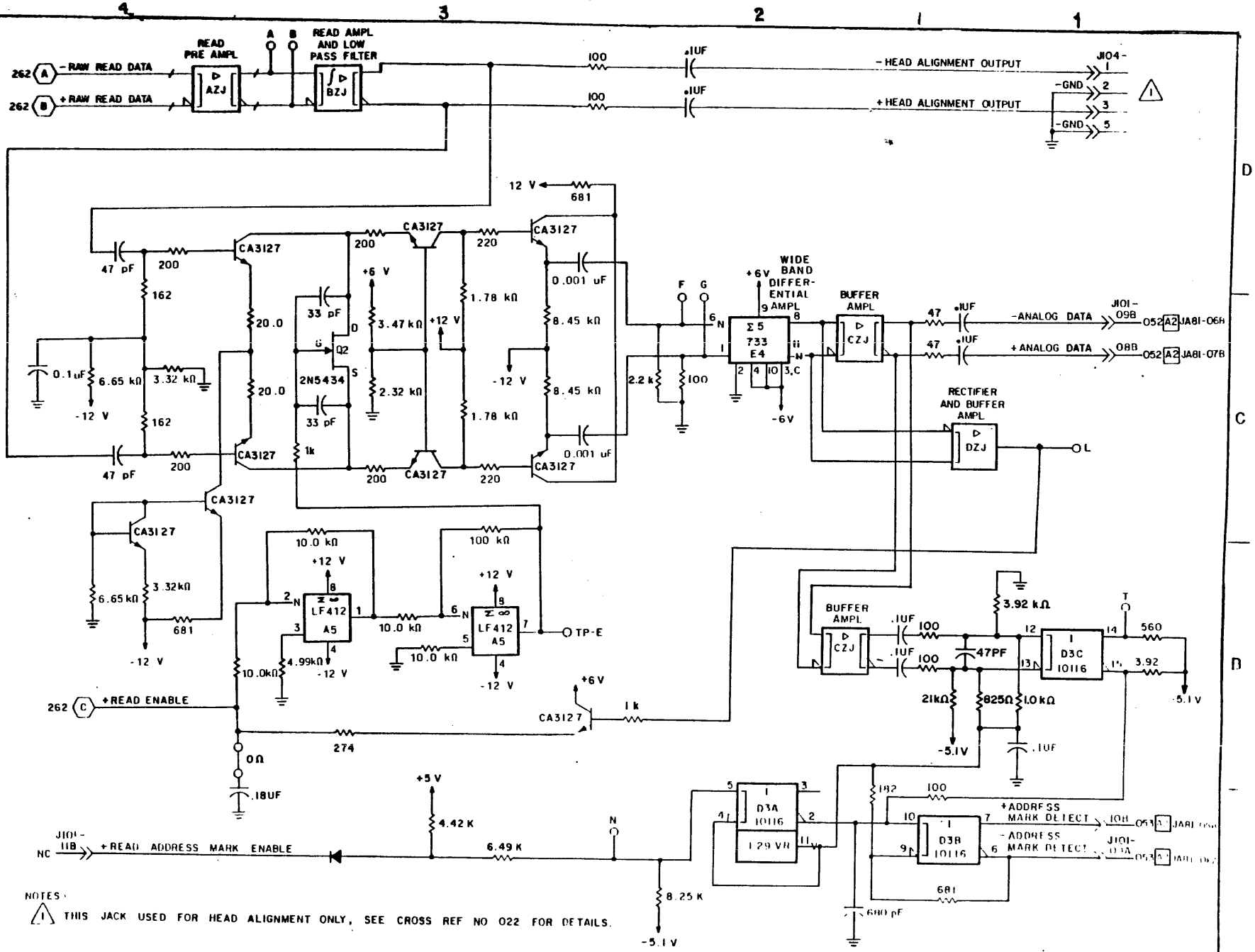

NOTES:

1. THIS JACK USED FOR HEAD ALIGNMENT ONLY, SEE CROSS REF NO 022 FOR DETAILS.

CONTROL DATA TWIN CITIES DISK DIVISION	READ AMPLIFIER, ADDRESS MARK DETECTION	CODE IDENT 19333	C	83322240	AA K
	LOC A3A02	263	SHEET 3	1-174 3/4	

REVISION STATUS OF SHEETS

1	2	3	4	5	6	7	8	9	10	11	12	13	14	15	16	17	18	19	20
A	A	A																	
B	B	B																	
C	C	C																	
D	C	D																	
E	E	D																	

UNUSED LOGIC ELEMENTS

TYPE	LOCATION	OUTPUT PIN(S)
200	D3	12
140	C4	3

REVISIONS

REV.	ECO.	DESCRIPTION	DRFT	DATE	CHK'D
A	PE23000	RELEASED	MLA	8-20-76	
B	PE48402	CORR DIAG			
C	PE48523	CORR DIAG	DM	7-22-77	
D	PE48675	ERR CORR	DM	1-25-78	
E	PE55933	CORRECT DIAGRAMS	MA	10-9-78	

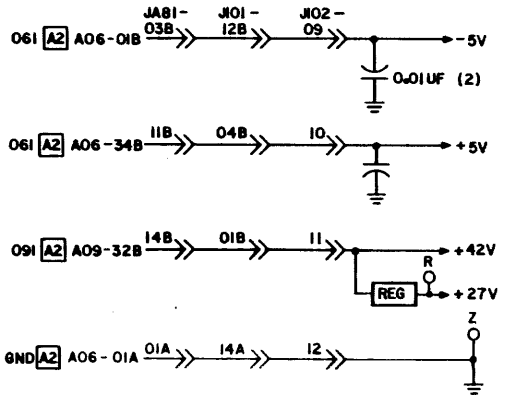

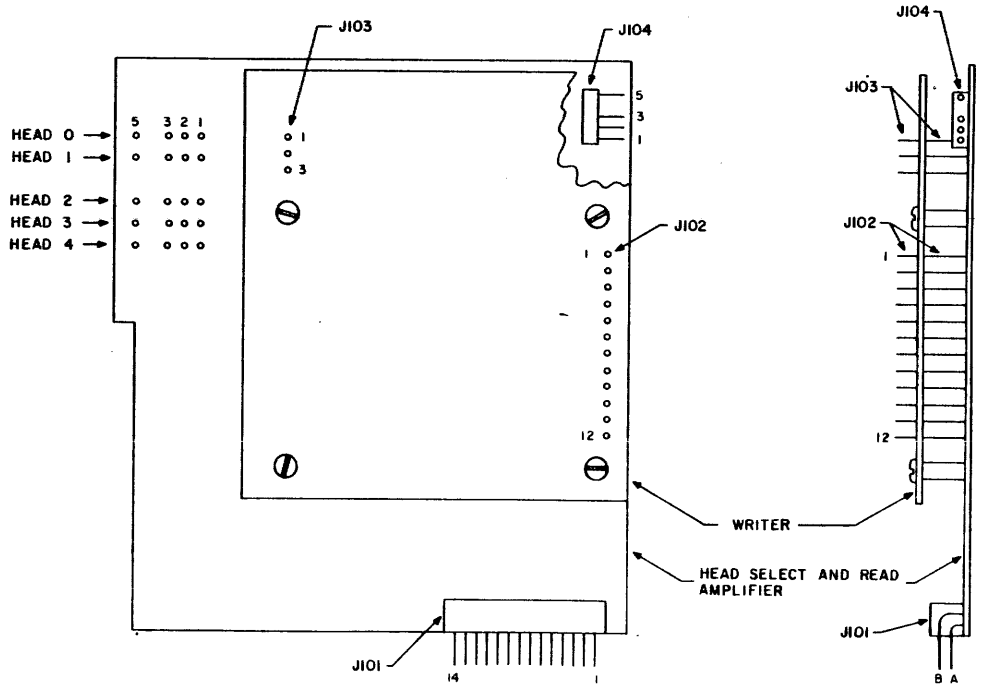

APPLICABLE TO BK5XX=9762

DRAWN		CONTROL DATA	WRITER DIAGRAMS	CODE IDENT 19333	C	83322240	S E
CHECKED							
ENGINEER		NORMANDALE DIVISION	TYPE: EZKN LOC A3A03	CROSS REF NO 271		SHEET 1 OF 3	PAGE 1-175
APPROVED							

REF 83214827

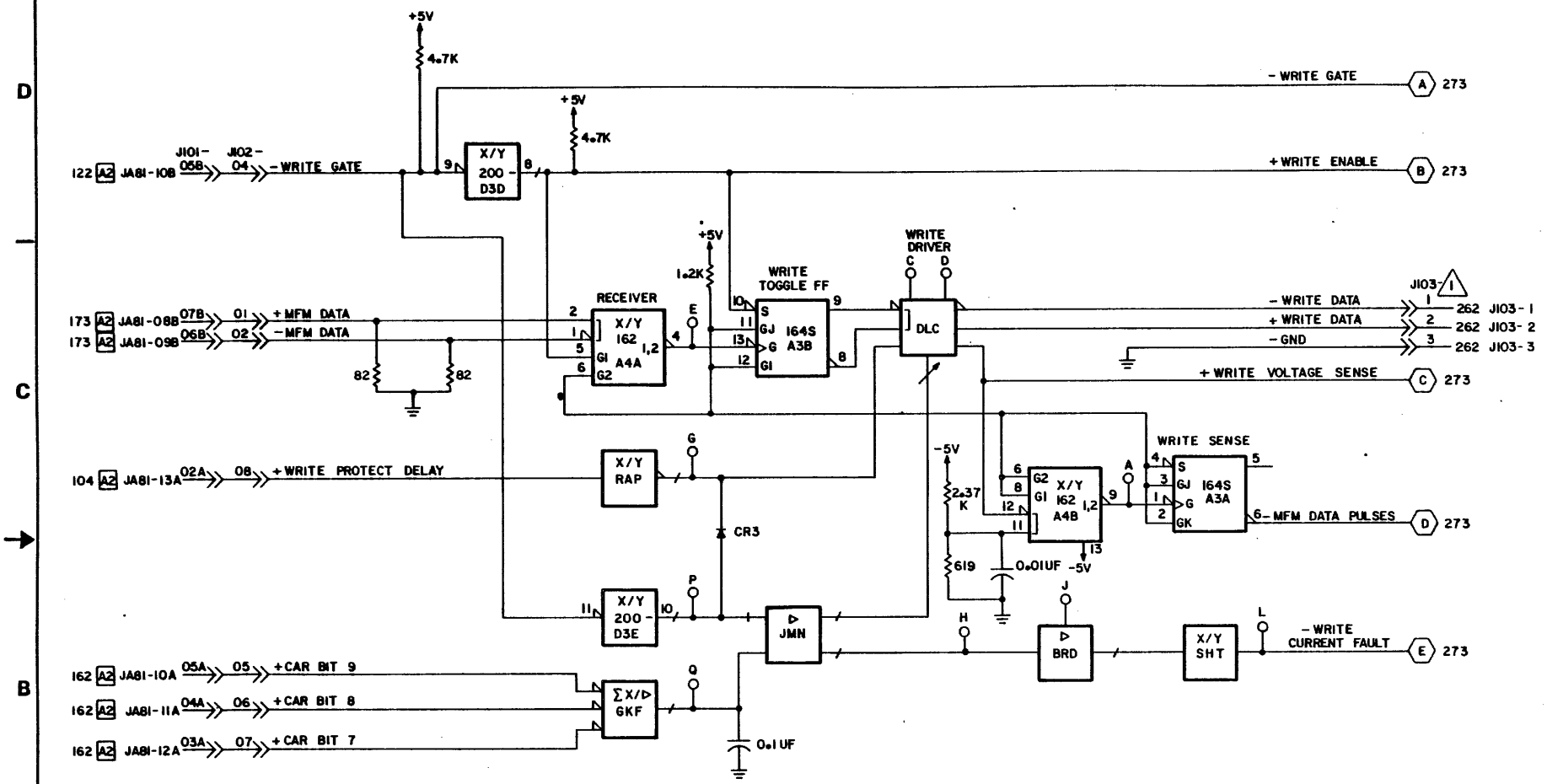

NOTE:

1. FEEDTHROUGH PINS LABLED AS J103 BOTH ON A3A02 AND A3A03

CONTROL DATA CORPORATION NORMANDALE DIVISION	WRITE AMPLIFIER (9762) LOC A3A03	CODE IDENT 19333	C	83322240	S	E
		DRAWING SIZE	272	SHEET 2	PAGE	1-176

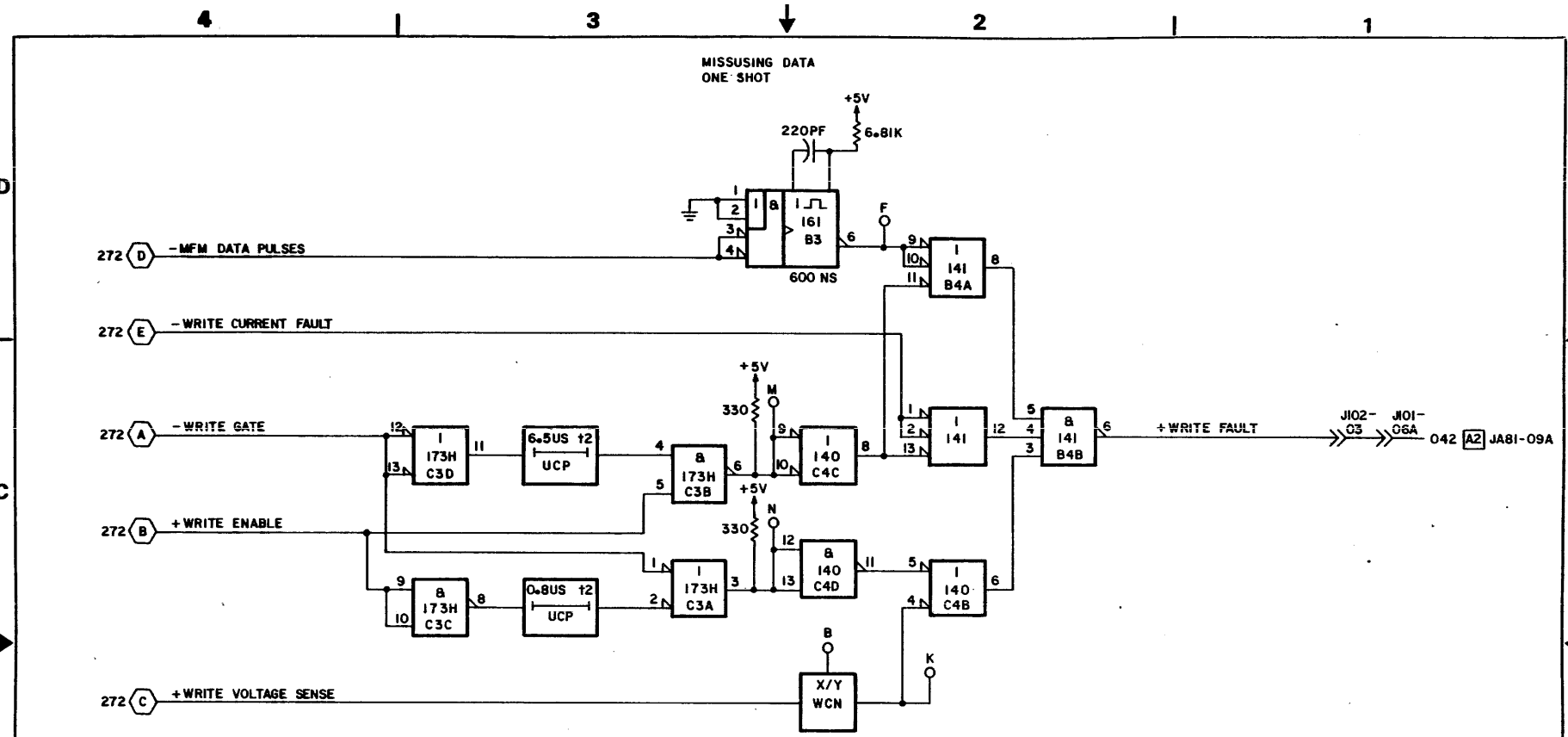

CONTROL DATA CORPORATION NORMANDALE DIVISION	WRITE FAULT DETECTION (9762) LOC A3A03	CODE IDENT 19333	C	83322240	S	D
		SIZE	273	SHEET 3	PAGE 1-177/178	

REVISION STATUS OF SHEETS

1	2	3	4	5	6	7	8	9	10	11	12	13	14	15	16	17	18	19	20
A	A																		
B	A																		
C	C																		
D	D																		
E	E																		
F	F																		

REVISIONS

REV	ECO	DESCRIPTION	DRFT	DATE	CHK'D
A	PE23000	RELEASED	MLA	8-20-76	
B	PE48402	CORRECT DIAGRAMS	GR	12-20-76	
C	PE55229	ADD HYBIRD PWR SUP	MA	1-19-79	
D	PE55272	ADD DIODE	TH	7-13-79	
E	PE60030A	CORRECT DIAGRAMS	MF	7-15-80	
F	0J00215	CHG VTN CARD ASSY	MJ	5-27-83	

NOTE:

1. AVTN - USED ON BK5A1K, BK5A7M, BK5A9J, BK5A9U, BK5C1E/F

DRAWN		CONTROL DATA CORPORATION	POWER AMPLIFIER DIAGRAMS	CODE IDENT 19333	C	83322240	Y	F
CHECKED								
ENGINEER		NORMANDALE DIVISION	TYPE: 5VTN 1 LOC A3A04	DRAWING NO. 281		SHEET 1 OF 2	PAGE 1-179	
APPROVED								

REF 83214828

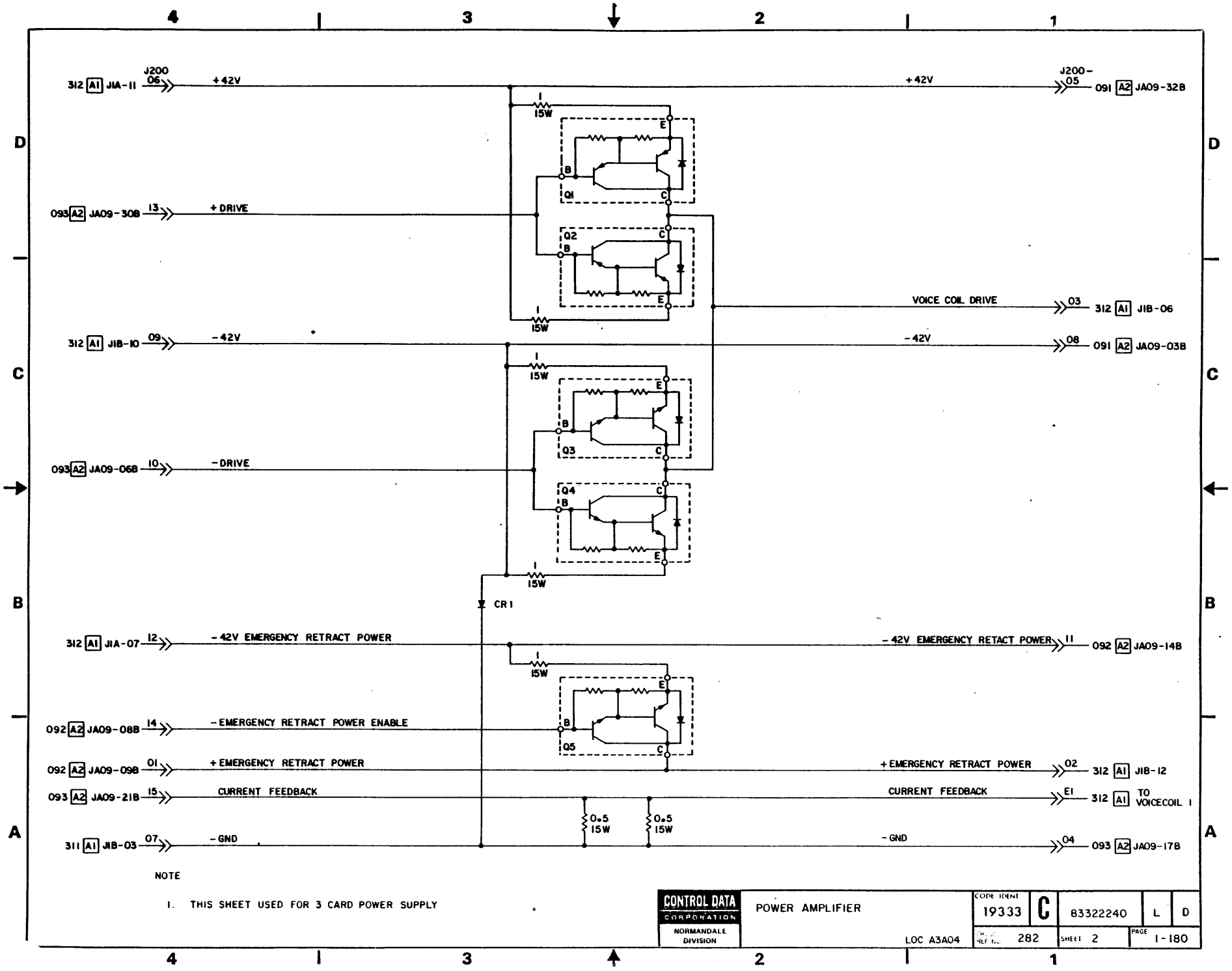
312 A1 J1A-11
J200 06
+42V
+42V
J200-05
091 A2 JA09-32B
15W
Q1
Q2
093 A2 JA09-30B
13
+DRIVE
VOICE COIL DRIVE
03
312 A1 J1B-06
312 A1 J1B-10
09
-42V
-42V
08
091 A2 JA09-03B
Q3
Q4
093 A2 JA09-06B
10
-DRIVE
CR1
312 A1 J1A-07
12
-42V EMERGENCY RETRACT POWER
-42V EMERGENCY RETRACT POWER
11
092 A2 JA09-14B
Q5
092 A2 JA09-08B
14
-EMERGENCY RETRACT POWER ENABLE
092 A2 JA09-09B
01
+EMERGENCY RETRACT POWER
+EMERGENCY RETRACT POWER
02
312 A1 J1B-12
093 A2 JA09-21B
15
CURRENT FEEDBACK
CURRENT FEEDBACK
E1
312 A1 TO VOICECOIL 1
0.5 15W
0.5 15W
311 A1 J1B-03
07
-GND
-GND
04
093 A2 JA09-17B
NOTE
1. THIS SHEET USED FOR 3 CARD POWER SUPPLY
CONTROL DATA CORPORATION
NORMANDALE DIVISION
POWER AMPLIFIER
LOC A3A04
CODE IDENT 19333
C
83322240
L
D
REF NO. 282
SHEET 2
PAGE 1-180

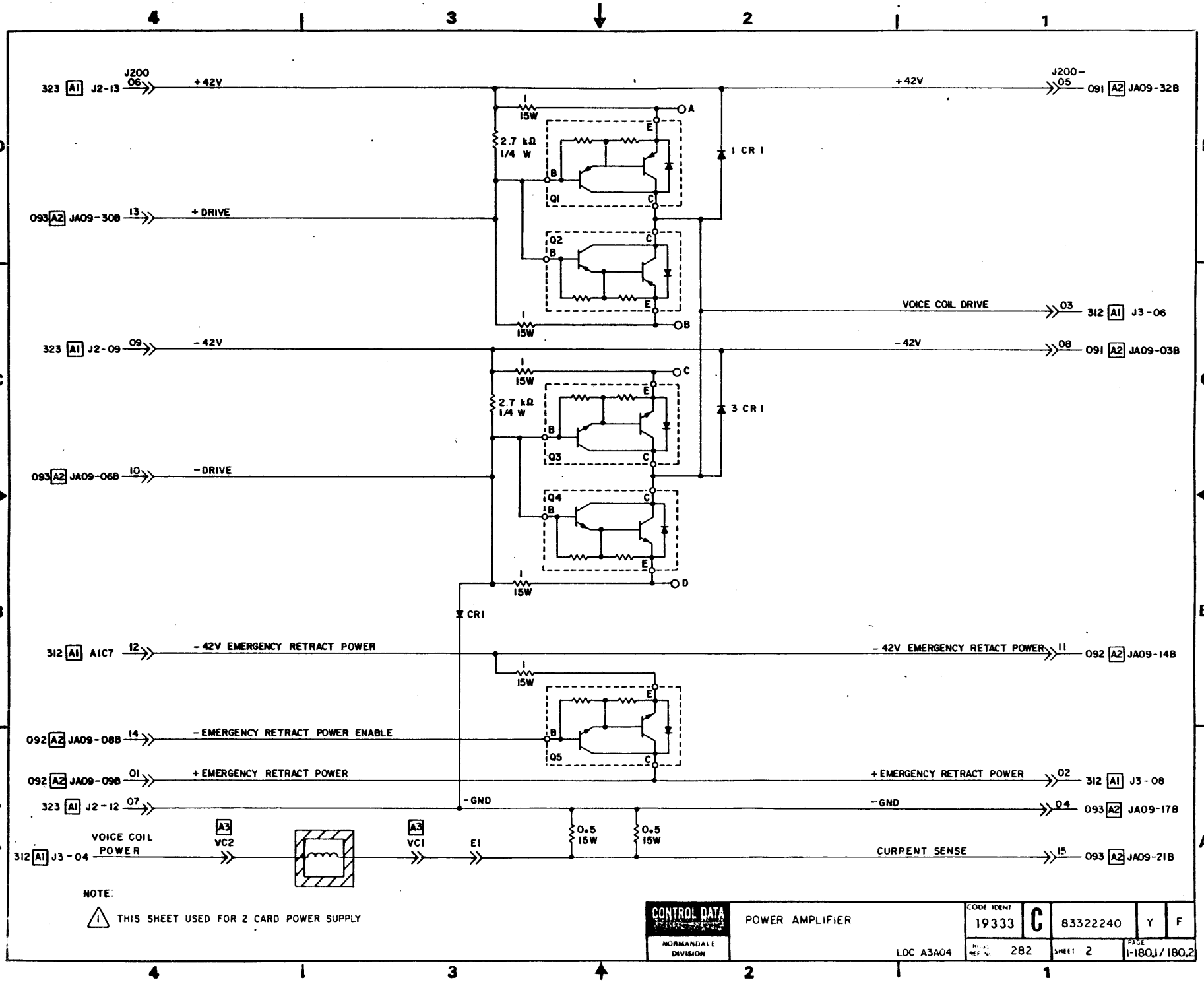
323 A1 J2-13 J200 06 +42V
+42V J200-05 091 A2 JA09-32B
1 15W A
2.7 kΩ 1/4 W
E B C Q1
1 CR 1
093 A2 JA09-30B 13 +DRIVE
Q2 C B E
1 15W B
VOICE COIL DRIVE 03 312 A1 J3-06
323 A1 J2-09 09 -42V
-42V 08 091 A2 JA09-03B
1 15W C
2.7 kΩ 1/4 W
Q3
3 CR 1
093 A2 JA09-06B 10 -DRIVE
Q4
1 15W D
CR1
312 A1 A1C7 12 -42V EMERGENCY RETRACT POWER
-42V EMERGENCY RETRACT POWER 11 092 A2 JA09-14B
1 15W
092 A2 JA09-08B 14 -EMERGENCY RETRACT POWER ENABLE
Q5
092 A2 JA09-09B 01 +EMERGENCY RETRACT POWER
+EMERGENCY RETRACT POWER 02 312 A1 J3-08
323 A1 J2-12 07 -GND
-GND 04 093 A2 JA09-17B
VOICE COIL POWER
312 A1 J3-04
A3 VC2
A3 VC1
E1
0.5 15W
0.5 15W
CURRENT SENSE 15 093 A2 JA09-21B
NOTE:
1 THIS SHEET USED FOR 2 CARD POWER SUPPLY
CONTROL DATA NORMANDALE DIVISION
POWER AMPLIFIER
LOC A3A04
CODE IDENT 19333
C
83322240
Y
F
282
SHEET 2
PAGE 1-180.1/180.2

REVISIONS					
REV	ECO	DESCRIPTION	DRFT	DATE	CHK'D
A	PE23000	RELEASED			
B	PE48402	CORR DIAG			
C	PE48523	CORR DIAG	DM	7-22-77	
D	PE55256	REMOVE UNUSED TERMINALS	MA	10-9-78	
E	PE55229	ADD HYBRID PWR SUP	MA	1-17-79	
F	PE57279	REPLACE BOARD BLANK	MJ	5-27-83	
G	DJ22000 DJ72000A	XFER FROM PE FORMAT CHANGE	M.R.	2-4-85	
H	DJ00735	CHG FZQN COMP	M.R.	2-4-85	

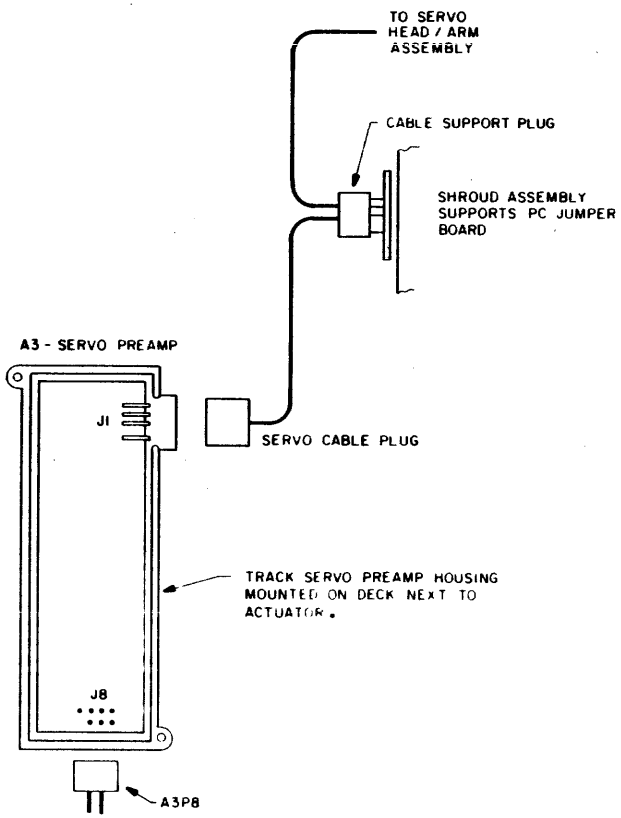

APPLICABLE TO BK5XX = 9762

DRAWN	G RABINE	8/23/76	CONTROL DATA CORPORATION TWIN CITIES DISK DIVISION	TRACK SERVO PREAMP DIAGRAMS	CODE IDENT 19333	C	83322240	AA	H
CHECKED									
ENGINEER	[illegible]	[illegible]		TYPE: FZQN LOC A3A05	CROSS REF NO. 291		SHEET 1 OF 2	PAGE 1-181	
APPROVED									

REF 83214829

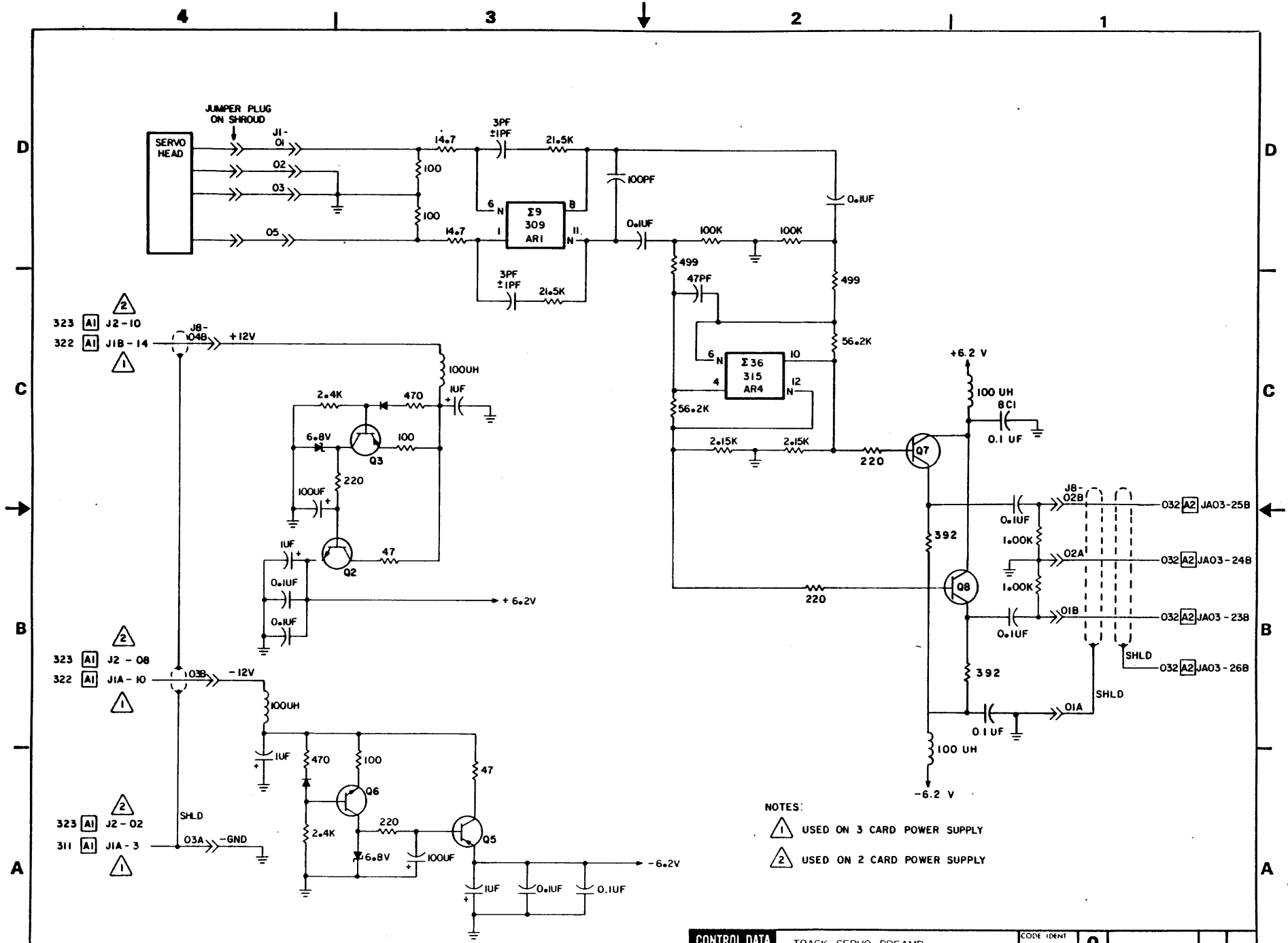

CONTROL DATA CORPORATION TWIN CITIES DISK DIVISION	TRACK SERVO PREAMP (9762) LOC: A3A05	CODE IDENT 19333	C	83322240	AA	H
		MISC 292	SHEET 2	PAGE 1-182		

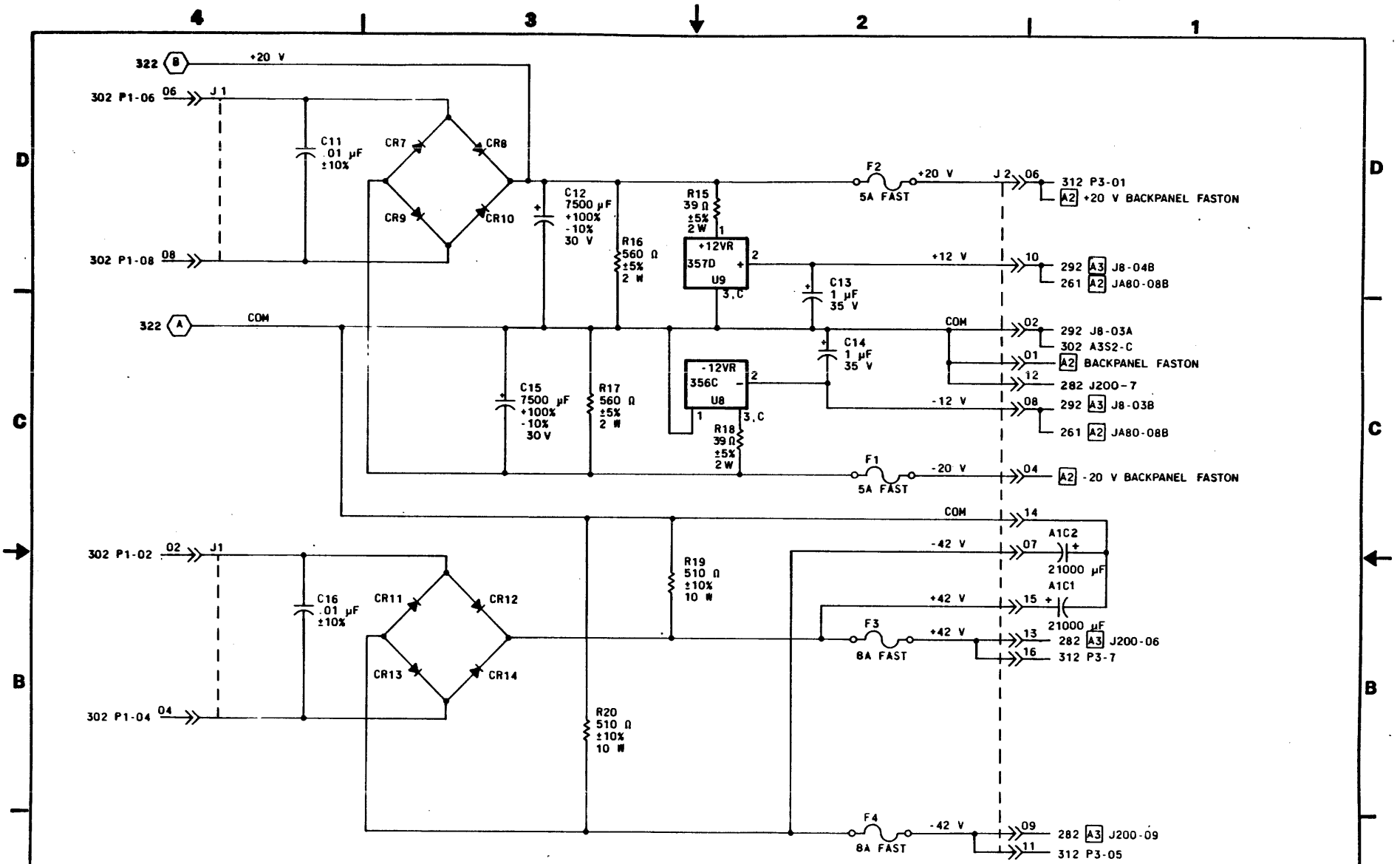

MAGNETIC PERIPHERALS INC.	ASSY A1	NORMANDALE OPERATIONS	C	83322240	Y F
		CODE IDENT 19333	CROSS REF NO 323	SHEET 3	PAGE 1-183.7/8

REVISION STATUS OF SHEETS

1	2	3	4	5	6	7	8	9	10	11	12	13	14	15	16	17	18	19	20
A	A																		
B	B																		
C	C																		
D	D																		
E	E	E																	
F	F	F																	
G	G	G																	
H	H	H																	
J	J	J																	
K	K	K																	
L	K	L																	
M	K	L																	
N	K	N																	
P																			

REVISIONS

REV.	ECO	DESCRIPTION	DRFT	DATE	CHK'D
A	PE23000	RELEASED	MLA	8-20-76	
B	PE48296	CORRECT DIAGRAMS	SB	11-2-76	
C	PE48402	CORR. DIAG			
D	PE48477	INC. VOLTAGE RATING OF MOTOR CONTROL TRIAGS.	DM	7-22-77	
E	PE55229	ADD HYBRID PWR SUP	MA	1-17-79	
F	PE55848	ADD REMOVABLE LINE FILTER AND POWER CORD	CB	2-6-80	
G	PE48610	ERROR CORRECTION	MF	7-16-80	
H	PE55493	ERROR CORRECTION	MF	7-16-80	
J	PE55776	ERROR CORRECTION	MF	7-16-80	
K	PE55952	REMOVABLE PWR CORD	MF	7-16-80	
L	PE24500	MADE SCHE CHG	MJ	1-11-82	DD
M	PE56900	CHG NOT INSTALLED, DIA NOT AFFECTED	MJ	1-11-82	DD
N	DJ00030	ADD GROUNDING STUD	MJ	1-11-82	DD
P	DJ00243	CORR. DIA.	MJ	5-27-83	

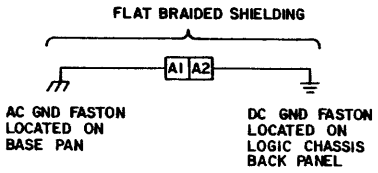

DRAWN		CONTROL DATA CORPORATION	AC POWER SYSTEM DIAGRAMS
CHECKED			
ENGINEER		NORMANDALE DIVISION	
APPROVED			LOC: A1

CODE IDENT				
19333	C	83322240	Y	P
MOSS REF NO. 301	SHEET 1 OF 3	PAGE 1-183		

1 REF 83214830

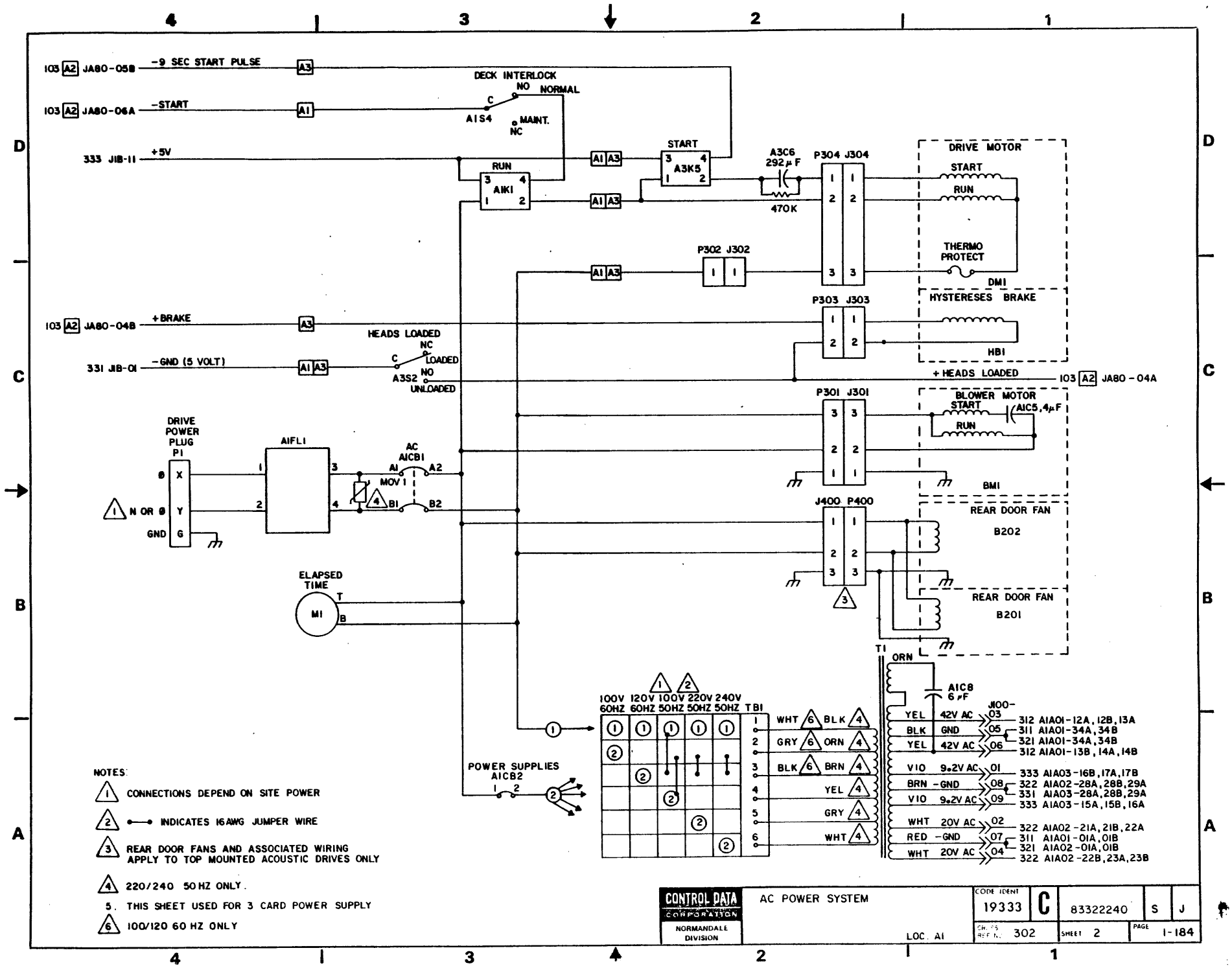
103 A2 JA80-05B -9 SEC START PULSE
103 A2 JA80-06A -START
333 J1B-11 +5V
DECK INTERLOCK
NO NORMAL
A1S4
MAINT.
NC
START
A3K5
RUN
A1K1
A3C6
292 μF
470K
P304 J304
DRIVE MOTOR
START
RUN
THERMO PROTECT
DM1
P302 J302
P303 J303
HYSTERESES BRAKE
HB1
103 A2 JA80-04B +BRAKE
331 J1B-01 -GND (5 VOLT)
HEADS LOADED
NC
LOADED
A3S2
NO
UNLOADED
+HEADS LOADED
103 A2 JA80-04A
P301 J301
BLOWER MOTOR
START
A1C5, 4 μF
RUN
BM1
DRIVE POWER PLUG P1
N OR Ø
GND
A1FL1
AC A1CB1
MOV 1
J400 P400
REAR DOOR FAN
B202
REAR DOOR FAN
B201
ELAPSED TIME
M1
T1
ORN
A1C8
6 μF
100V 60HZ
120V 60HZ
100V 50HZ
220V 50HZ
240V 50HZ
TB1
POWER SUPPLIES A1CB2
J100-
YEL 42V AC 03 312 A1A01-12A,12B,13A
BLK GND 05 311 A1A01-34A,34B
YEL 42V AC 06 321 A1A01-34A,34B
312 A1A01-13B,14A,14B
VIO 9.2V AC 01 333 A1A03-16B,17A,17B
BRN -GND 08 322 A1A02-28A,28B,29A
VIO 9.2V AC 09 331 A1A03-28A,28B,29A
333 A1A03-15A,15B,16A
WHT 20V AC 02 322 A1A02-21A,21B,22A
RED -GND 07 311 A1A01-01A,01B
WHT 20V AC 04 321 A1A02-01A,01B
322 A1A02-22B,23A,23B
WHT BLK
GRY ORN
BLK BRN
YEL
GRY
WHT
NOTES:
1. CONNECTIONS DEPEND ON SITE POWER
2. INDICATES 16 AWG JUMPER WIRE
3. REAR DOOR FANS AND ASSOCIATED WIRING APPLY TO TOP MOUNTED ACOUSTIC DRIVES ONLY
4. 220/240 50 HZ ONLY.
5. THIS SHEET USED FOR 3 CARD POWER SUPPLY
6. 100/120 60 HZ ONLY
CONTROL DATA CORPORATION
NORMANDALE DIVISION
AC POWER SYSTEM
LOC. A1
CODE IDENT 19333
C
83322240
S
J
CROSS REF. NO. 302
SHEET 2
PAGE 1-184

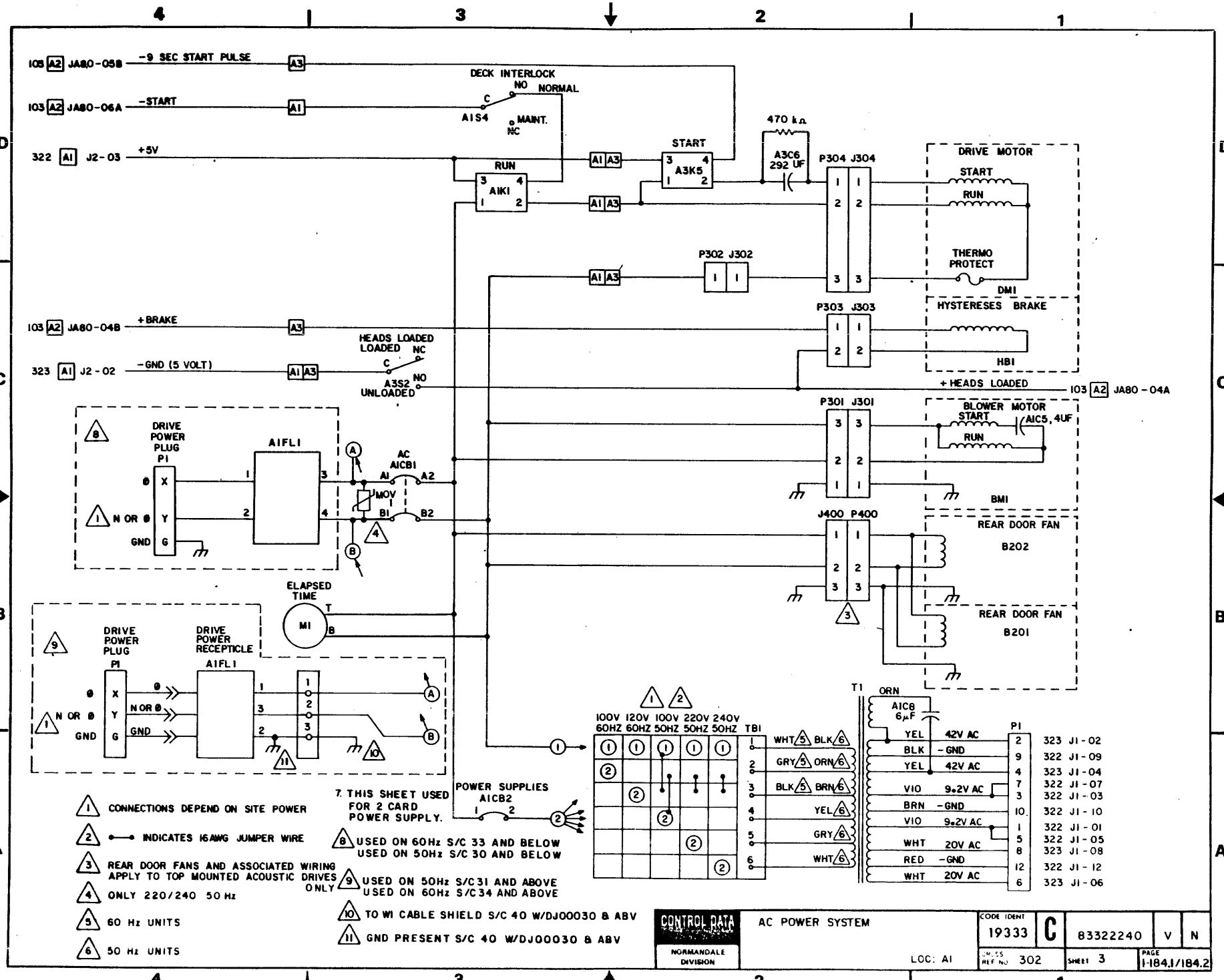
103 A2 JA80-05B -9 SEC START PULSE A3
103 A2 JA80-06A -START A1
322 A1 J2-03 +5V
DECK INTERLOCK
NO NORMAL
C
A1S4
NC MAINT.
RUN
A1K1
START
A3K5
470 kΩ
A3C6 292 UF
P304 J304
DRIVE MOTOR
START
RUN
THERMO PROTECT
DMI
P302 J302
P303 J303
HYSTERESES BRAKE
HBI
103 A2 JA80-04B +BRAKE
323 A1 J2-02 -GND (5 VOLT)
HEADS LOADED
LOADED NC
A3S2
UNLOADED NO
+HEADS LOADED
103 A2 JA80-04A
P301 J301
BLOWER MOTOR
START
A1C5, 4UF
RUN
BMI
J400 P400
REAR DOOR FAN
B202
REAR DOOR FAN
B201
DRIVE POWER PLUG
P1
A1FL1
AC
A1CB1
MOV
ELAPSED TIME
M1
DRIVE POWER RECEPTICLE
POWER SUPPLIES
A1CB2
100V 60HZ
120V 60HZ
100V 50HZ
220V 50HZ
240V 50HZ
TB1
T1
ORN
A1C8 6μF
42V AC
-GND
9.2V AC
20V AC
323 J1-02
322 J1-09
323 J1-04
322 J1-07
322 J1-03
322 J1-10
322 J1-01
322 J1-05
323 J1-08
322 J1-12
323 J1-06
1 CONNECTIONS DEPEND ON SITE POWER
2 INDICATES 16AWG JUMPER WIRE
3 REAR DOOR FANS AND ASSOCIATED WIRING APPLY TO TOP MOUNTED ACOUSTIC DRIVES ONLY
4 ONLY 220/240 50 Hz
5 60 Hz UNITS
6 50 Hz UNITS
7. THIS SHEET USED FOR 2 CARD POWER SUPPLY.
8 USED ON 60Hz S/C 33 AND BELOW
USED ON 50Hz S/C 30 AND BELOW
9 USED ON 50Hz S/C 31 AND ABOVE
USED ON 60Hz S/C 34 AND ABOVE
10 TO W1 CABLE SHIELD S/C 40 W/DJ00030 & ABV
11 GND PRESENT S/C 40 W/DJ00030 & ABV
CONTROL DATA
NORMANDALE DIVISION
AC POWER SYSTEM
LOC: A1
CODE IDENT 19333
C
83322240
V
N
CNSS REF NO. 302
SHEET 3
PAGE 1-184.1/184.2

REVISIONS					
REV	ECO	DESCRIPTION	DRFT	DATE	CHK'D
A	DJ00399	VDE NEW CREATE	KKB	11-23-82	
B	DJ00706	CORRECT BKS VDE	BCK	5-21-84	
	DJ72000A	FORMAT CHG			

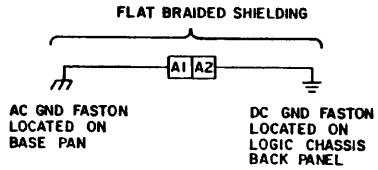

THIS SET USED FOR BK5C6D

DRAWN	K.BARTSCH	11-23-82	CONTROL DATA CORPORATION TWIN CITIES DISK DIVISION	AC POWER SYSTEM DIAGRAMS	CODE IDENT 19333	C	83322240	Z	B
CHECKED									
ENGINEER									
APPROVED				LOC A1	BOSS REF NO. 301		SHEET 1 OF 2	PAGE 1-184.3	

REF 83214873

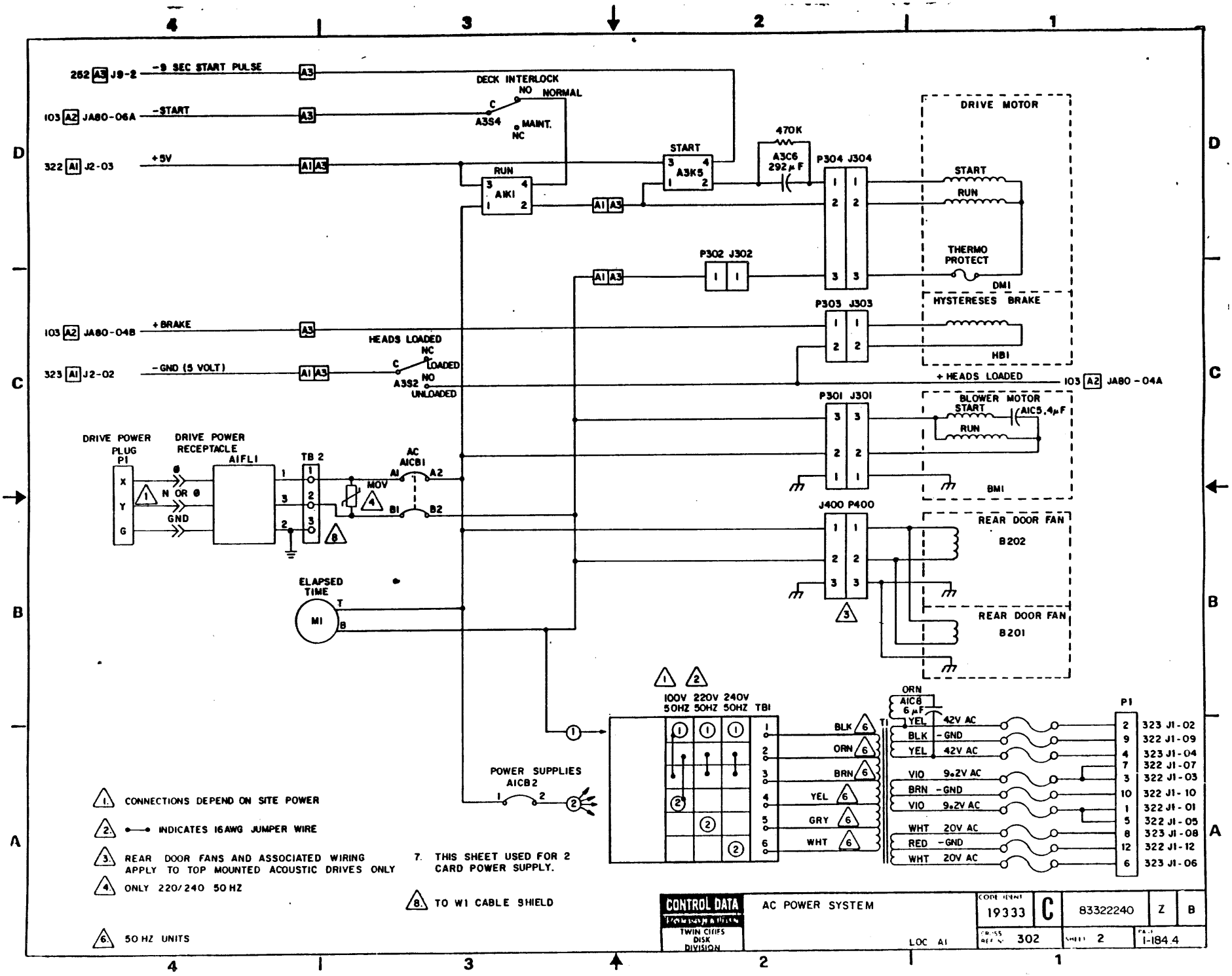

252 A3 J9-2 -9 SEC START PULSE
103 A2 JA80-06A -START
322 A1 J2-03 +5V
103 A2 JA80-04B +BRAKE
323 A1 J2-02 -GND (5 VOLT)
DECK INTERLOCK
NO NORMAL
A3S4
MAINT.
NC
RUN
A1K1
START
A3K5
470K
A3C6
292 μF
P304 J304
P302 J302
P303 J303
P301 J301
J400 P400
DRIVE MOTOR
START
RUN
THERMO PROTECT
DM1
HYSTERESES BRAKE
HB1
+ HEADS LOADED
103 A2 JA80-04A
BLOWER MOTOR
START
A1C5 .4μF
RUN
BM1
REAR DOOR FAN
B202
REAR DOOR FAN
B201
HEADS LOADED
NC
LOADED
A3S2
NO
UNLOADED
DRIVE POWER PLUG
P1
DRIVE POWER RECEPTACLE
A1FL1
TB 2
AC
A1CB1
MOV
N OR Ø
GND
ELAPSED TIME
M1
100V 50HZ
220V 50HZ
240V 50HZ
TB1
POWER SUPPLIES
A1CB2
ORN
A1C8
6 μF
T1
BLK
ORN
BRN
YEL
GRY
WHT
YEL 42V AC
BLK -GND
YEL 42V AC
VIO 9.2V AC
BRN -GND
VIO 9.2V AC
WHT 20V AC
RED -GND
WHT 20V AC
P1
323 J1-02
322 J1-09
323 J1-04
322 J1-07
322 J1-03
322 J1-10
322 J1-01
322 J1-05
323 J1-08
322 J1-12
323 J1-06
1. CONNECTIONS DEPEND ON SITE POWER
2. INDICATES 16AWG JUMPER WIRE
3. REAR DOOR FANS AND ASSOCIATED WIRING APPLY TO TOP MOUNTED ACOUSTIC DRIVES ONLY
4. ONLY 220/240 50 HZ
6. 50 HZ UNITS
7. THIS SHEET USED FOR 2 CARD POWER SUPPLY.
8. TO W1 CABLE SHIELD
CONTROL DATA
TWIN CITIES DISK DIVISION
AC POWER SYSTEM
LOC A1
CODE IDENT 19333
C
83322240
Z
B
CROSS REF NO 302
SHEET 2
PAGE 1-184.4

REVISION STATUS OF SHEETS

1	2	3	4	5	6	7	8	9	10	11	12	13	14	15	16	17	18	19	20
A	A																		
B	B																		
C	C																		
D	D																		
E	E																		

REVISIONS

REV	ECO	DESCRIPTION	DRFT	DATE	CHK'D
A	PE23000	RELEASED	MLA	8-23-76	
B	PE48402	CORRECT DIAGRAMS	GR	12-20-76	
C	PE48428	CORRECT DIAGRAMS	DM	7-22-77	
D	PE55229	ADD HYBRID PWR SUP	MA	1-17-79	
E	PE55422	CHANGE FUSE	TH	5-23-79	

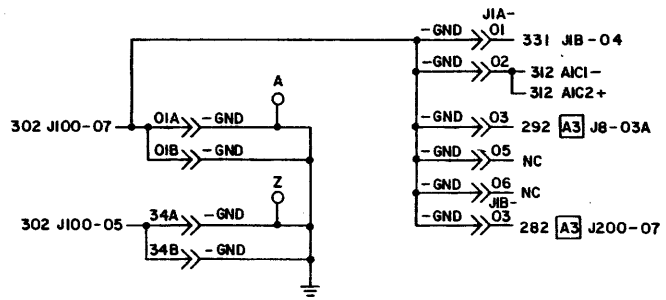

NOTE:

1. THIS SET USED FOR 3 CARD POWER SUPPLY

DRAWN		CONTROL DATA CORPORATION	±42V POWER SUPPLY AND EMERGENCY RETRACT DIAGRAMS	CODE IDENT 19333	C	83322240	K E
CHECKED							
ENGINEER		NORMANDALE DIVISION	TYPE 5SJV LOC A1A01	CHECK REF NO 311	SHEET 1 OF 2	PAGE 1-185	
APPROVED							

REF 83214831

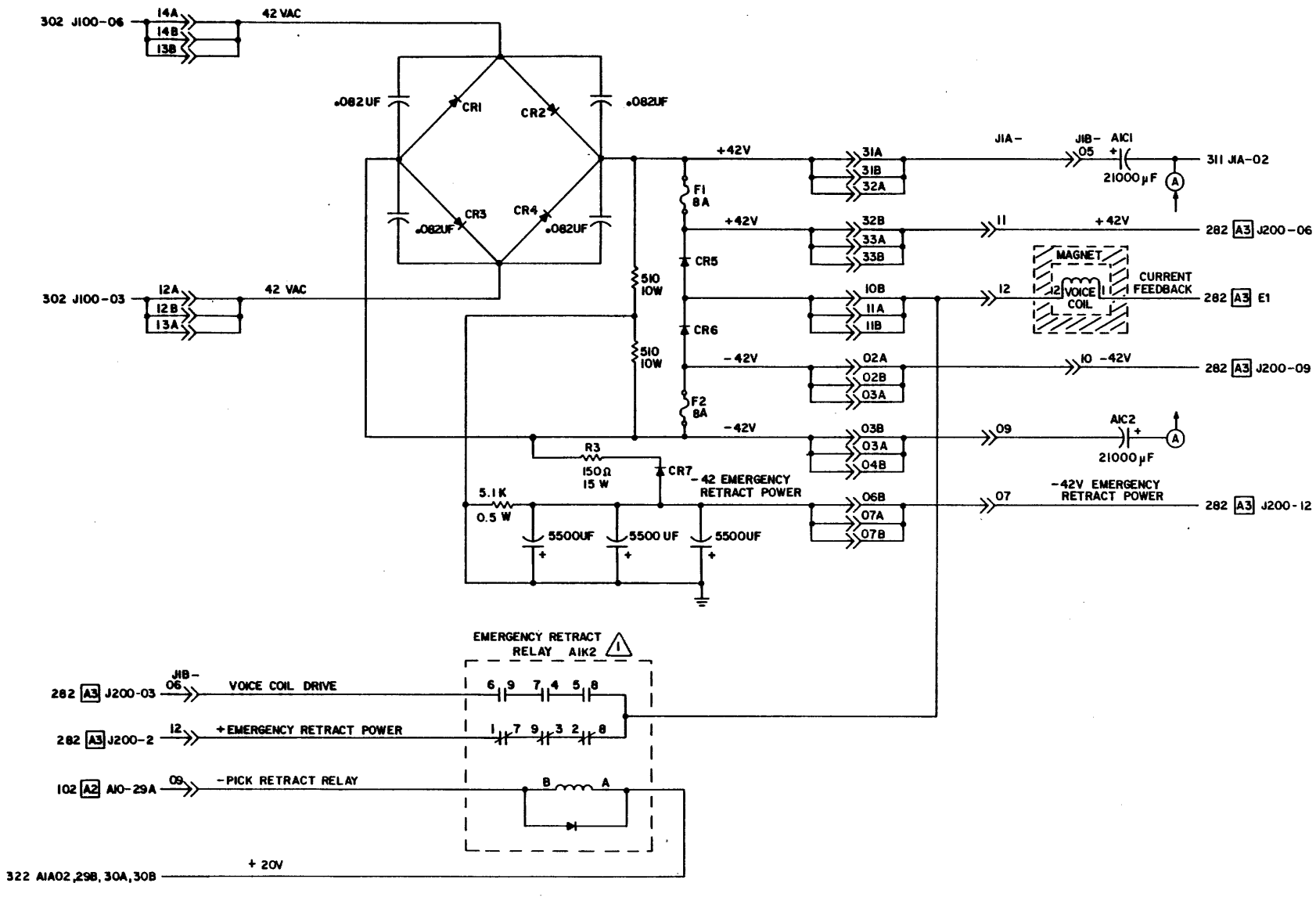

NOTE:

1. RELAY FOUND ON P/S MOTHER BOARD.

CONTROL DATA CORPORATION NORMANDALE DIVISION	PLUS AND MINUS 42 VOLT SUPPLY AND EMERGENCY RETRACT LOC A1A01	CODE IDENT 19333	C	83322240	K	E
		DRAWING NO. 312		SHEET 2	PAGE 1-186	

REVISION STATUS OF SHEETS

1	2	3	4	5	6	7	8	9	10	11	12	13	14	15	16	17	18	19	20
A	A																		
B	B																		
C	C																		
D	D																		
E	E																		
F	F																		
G	G																		
H	H																		
J	J																		

REVISIONS

REV	ECO	DESCRIPTION	DRFT	DATE	CHK'D
A	PE23000	RELEASED	[illegible]	[illegible]	[illegible]
b	PE48402	ERROR CORR	VG	1 11 77	[illegible]
C	PE48523	ERROR CORR	SB	4 7 77	[illegible]
D	PE55223	HYBRID PWR SUP	GR	6 2 78	
E	PE60030A	CORRECT DIAGRAM	MF	7-16-80	
F	DJ22000	TRANSFER	MJ	5-27-83	
G	DJ00334	AXFV CAP CHG	MJ	5-27-83	
H	DJ00405	CHG AXFV BD BLANK	MJ	5-27-83	
J	DJ00612	CHG CAP ON AXFV	JG	7-24-84	

THIS SET USED FOR 2 CARD PWR SUP

DRAWN	[illegible]	9-15-77	CONTROL DATA
CHECKED			
ENGINEER	R E Davis	10-27-77	NORMANDALE DIVISION
APPROVED			

EMERGENCY RETRACT DIAGRAMS

TYPE: AXFV

CODE IDENT				
19333	C	83322240	Z	J
CROSS REF NO. 311	SHEET 1 OF 2	PAGE 1-186.1		

REF: 83214831

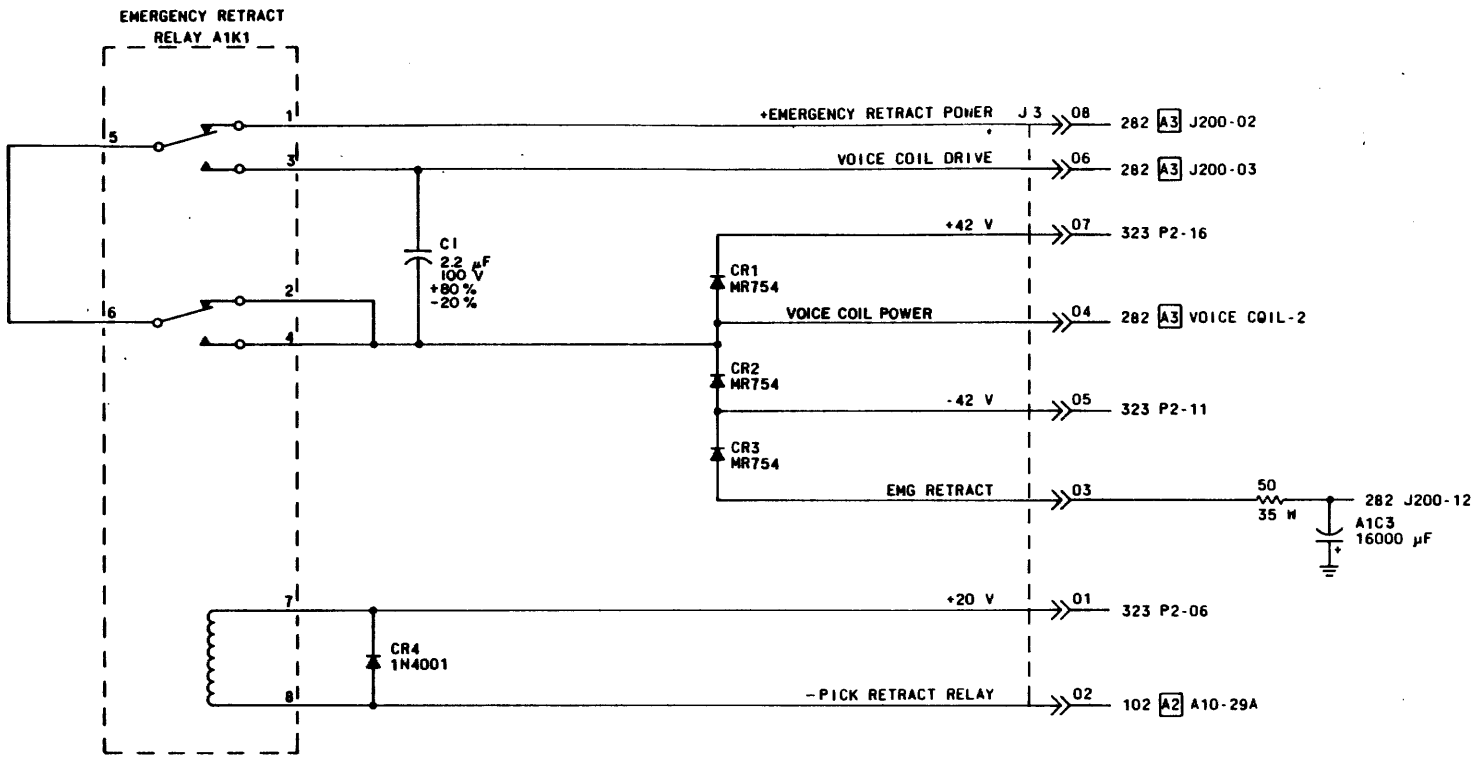

MAGNETIC PERIPHERALS INC.	EMERGENCY RETRACT	NORMANDALE OPERATIONS	C	83322240	Z	J
		CODE IDENT 19333	CROSS REF NO 312	SHEET 2	PAGE 1-186.2	

REVISION STATUS OF SHEETS

1	2	3	4	5	6	7	8	9	10	11	12	13	14	15	16	17	18	19	20
A	A																		
B	B																		

REVISIONS

REV	ECO	DESCRIPTION	DRFT	DATE	CHK'D
A	PE23000	RELEASED	ML A	8-24-76	
B	PE55229	ADD HYBRID PWR SUP	MA	1-19-79	

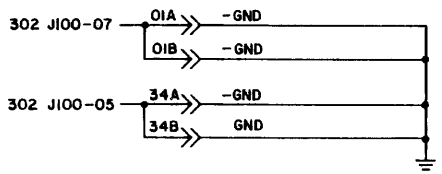

THIS SET USED FOR 3 CARD PWR SUP

DRAWN		CONTROL DATA CORPORATION	PLUS AND MINUS 12V AND PLUS AND MINUS 20V DIAGRAMS	CODE IDENT 19333	C	83322240	Z B
CHECKED							
ENGINEER		NORMANDALE DIVISION	TYPE 5SKV LOC A1A02	CROSS REF NO 321		SHEET 1 OF 2	PAGE 1-187
APPROVED							

REF 83214832

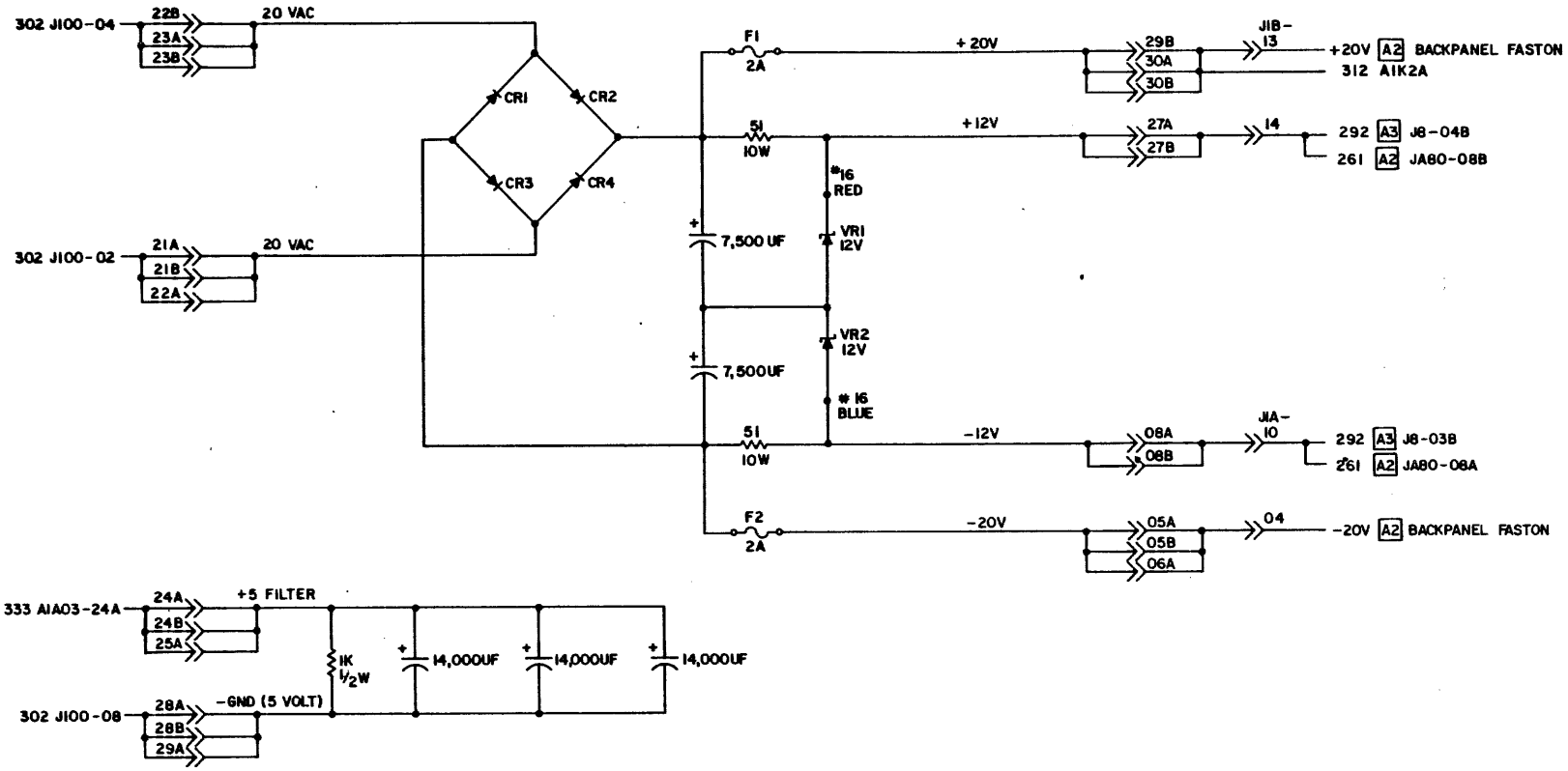

CONTROL DATA CORPORATION NORMANDALE DIVISION	PLUS AND MINUS 12V AND PLUS AND MINUS 20V POWER SUPPLY LOC A1A02	CODE IDENT 19333	C	83322240	J B
		CROSS REF NO. 322		SHEET 2	PAGE 1-188

REVISION STATUS OF SHEETS

1	2	3	4	5	6	7	8	9	10	11	12	13	14	15	16	17	18	19	20
A	A	A																	
B	B	B																	
C	C	C																	
D		D																	
E	E	E																	
F	F																		
G		G																	
H	H	H																	
J	J	J																	
K	K																		
L	L	L																	
M	M																		

REVISIONS

REV	ECO.	DESCRIPTION	DRFT	DATE	CHK'D
A	PE23000	RELEASED	[illegible]	[illegible]	[illegible]
B	PE55229	HYBRID PWR SUP	GR	6 2 78	
	PE55292	ADD CAP TO HYBRID CKT	GR	6 2 78	
D	PE55492	HYBRID PWR SUP FUSE CHANGE	MA	11-13-78	[illegible]
E	PE55493	ERROR CORRECTION	MA	11-14-78	[illegible]
F	PE55767	CHANGE POTS & BD	TH	6-8-79	[illegible]
G	PE55790	LOG DIA UP-DATE	TH	6 27 79	[illegible]
H	DJ00228	PWR SUP CHG	MJ	2-1-82	[illegible]
J	DJ22000	TRANSFER FROM PE	SMS	4-28-82	[illegible]
K	DJ00325	DELETE AC/DC GND ISOL	FA	8/16/82	[illegible]
L	DJ00360	ADD CAPS	FA	8/16/82	[illegible]
M	DJ00426	NEW EXKV BD BLANK	MJ	1-13-83	[illegible]

THIS SET USED FOR EXKV REV AF & ABV.

CONTROL DATA NORMANDALE DIVISION	AI POWER SUPPLY DIAGRAMS	19333	C	83322240	Y	M
	TYPE EXKV			1 3	1-188.1	

REF 83214832

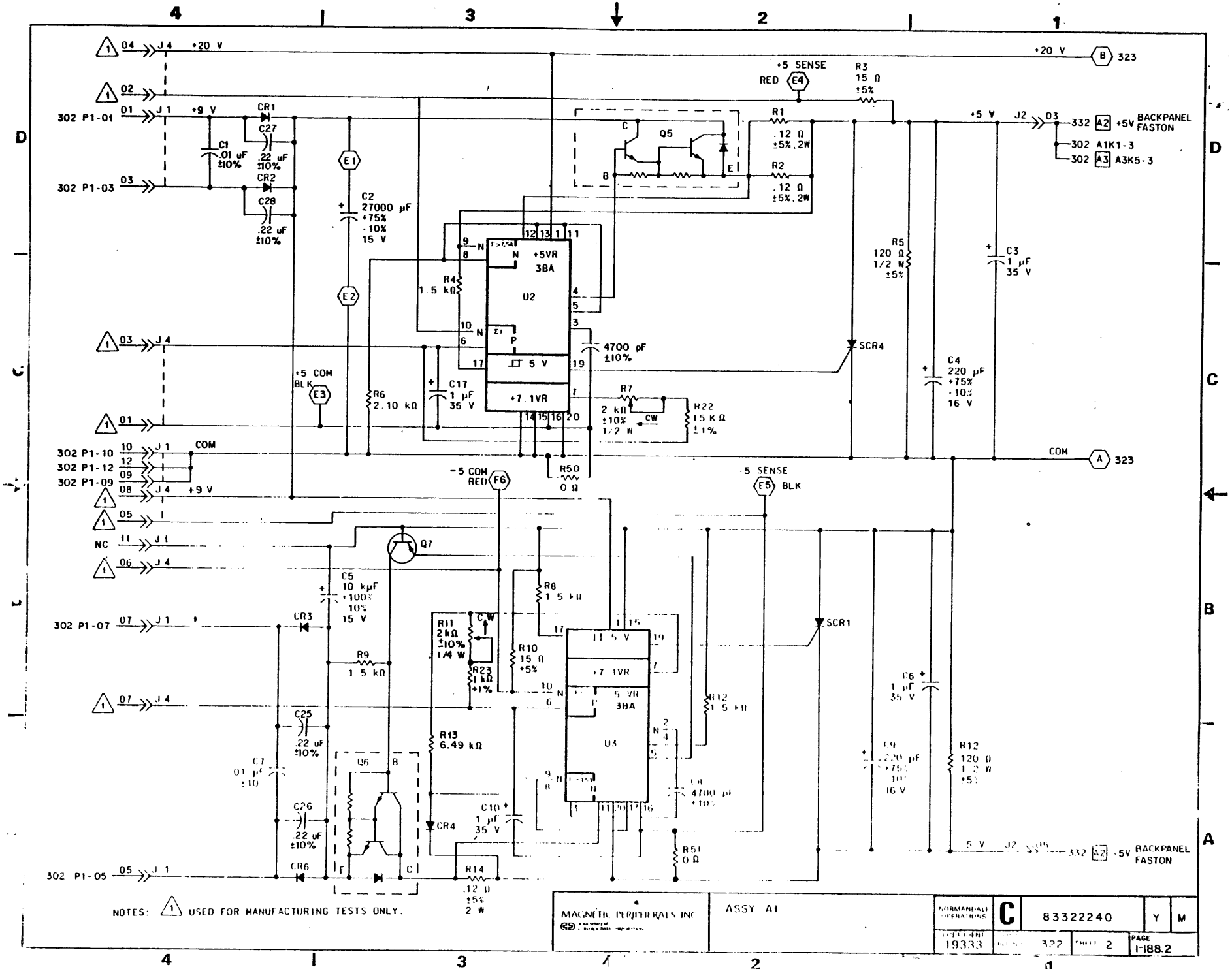
+20 V
+5 SENSE
RED E4
R3 15 Ω ±5%
+20 V B 323
302 P1-01
302 P1-03
+9 V
CR1
CR2
C1 .01 µF ±10%
C27 .22 µF ±10%
C28 .22 µF ±10%
C2 27000 µF +75% -10% 15 V
E1
E2
Q5
R1 .12 Ω ±5%, 2W
R2 .12 Ω ±5%, 2W
+5 V J2 03
332 A2 +5V BACKPANEL FASTON
302 A1K1-3
302 A3K5-3
R4 1.5 kΩ
U2
+5VR 3BA
5 V
+7.1VR
4700 pF ±10%
SCR4
R5 120 Ω 1/2 W ±5%
C3 1 µF 35 V
C4 220 µF +75% -10% 16 V
+5 COM BLK E3
R6 2.10 kΩ
C17 1 µF 35 V
R7 2 kΩ ±10% 1/2 W CW
R22 15 kΩ ±1%
302 P1-10
302 P1-12
302 P1-09
COM
COM A 323
-5 COM RED F6
R50 0 Ω
-5 SENSE E5 BLK
+9 V
NC
Q7
C5 10 kµF +100% 10% 15 V
302 P1-07
CR3
R11 2kΩ ±10% 1/4 W CW
R23 1 kΩ ±1%
R8 1.5 kΩ
R10 15 Ω ±5%
R9 1.5 kΩ
U3
SCR1
C6 1 µF 35 V
R12 1.5 kΩ
C25 .22 µF ±10%
C7 .01 µF ±10
Q6
R13 6.49 kΩ
C26 .22 µF ±10%
CR4
C10 1 µF 35 V
C8 4700 pF ±10%
C9 220 µF ±75% 10% 16 V
R12 120 Ω 1.2 W ±5%
R51 0 Ω
5 V J2 05
332 A2 -5V BACKPANEL FASTON
302 P1-05
CR6
R14 .12 Ω ±5% 2 W
NOTES: 1 USED FOR MANUFACTURING TESTS ONLY.
MAGNETIC PERIPHERALS INC
ASSY A1
NORMANDALE OPERATIONS
C
83322240
Y
M
RELEASED 19333
322
SHEET 2
PAGE 1-188.2

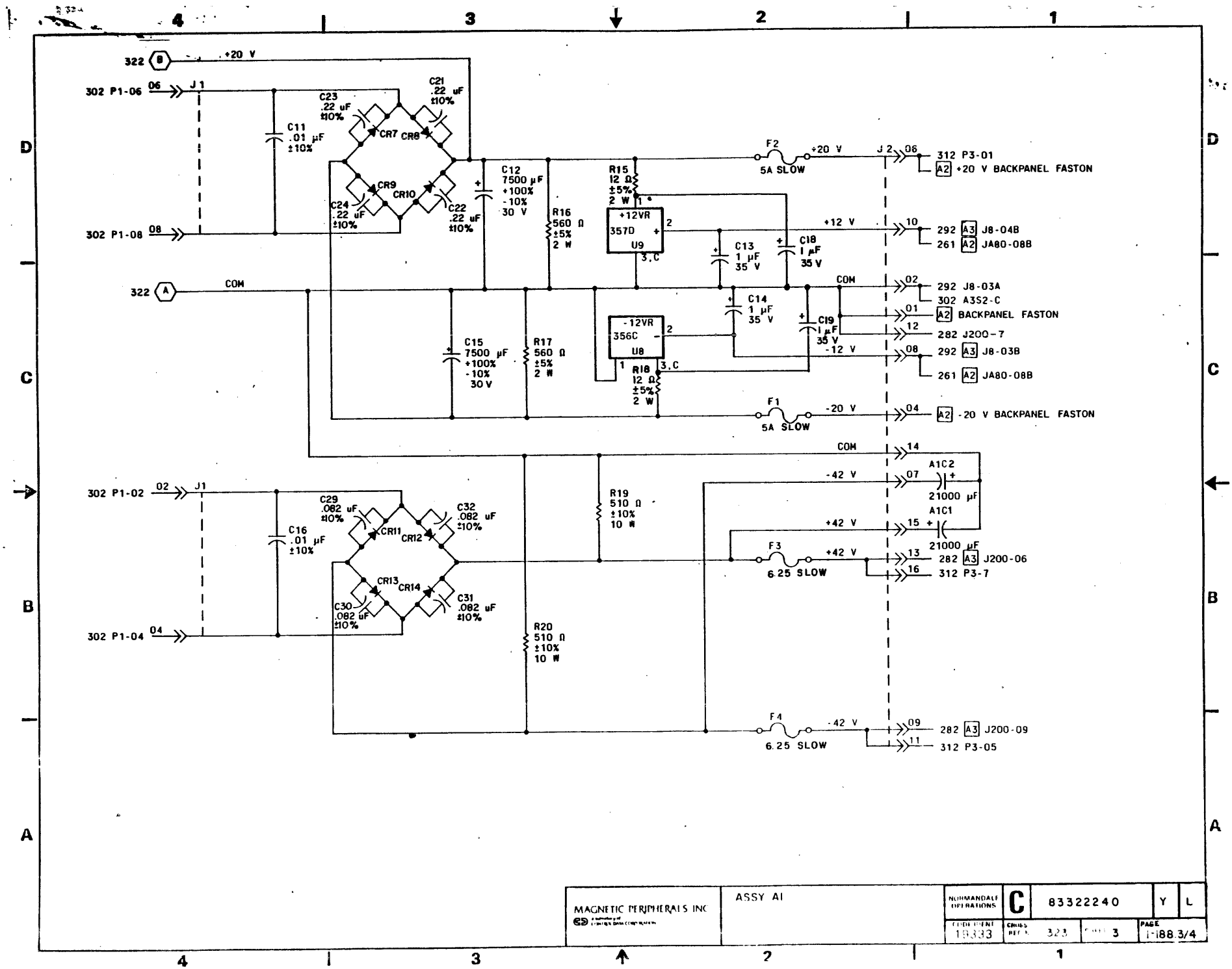

MAGNETIC PERIPHERALS INC	ASSY A1	NORMANDALE OPERATIONS	C	83322240	Y L
		CODE IDENT 18333	CROSS REF'S 323	SHEET 3	PAGE 1-188.3/4

REVISION STATUS OF SHEETS

1	2	3	4	5	6	7	8	9	10	11	12	13	14	15	16	17	18	19	20
A	A	A																	
B	B	B																	
C	C	C																	
D	C	D																	
E	E	E																	
F	E	F																	
G	G	F																	

REVISIONS

REV.	ECO.	DESCRIPTION	DRFT.	DATE	CHK'D
A	PE23000	RELEASED	[illegible]	[illegible]	KC
B	PE55229	HYBRID PWR SUP	GR	6-2-78	
C	PE55292	ADD CAP TO HYBRID CKT	GR	6-2-78	
D	PE55492	HYBRID PWR. SUP. FUSE CHANGE	MA	11-13-78	[illegible]
E	PE55493	ERROR CORRECTION	MA	11-14-78	[illegible]
F	PE55790	RES VALUE CHG	MF	7-16-80	
G	PE55767	CHG POTS AND BD	MF	7-16-80	

THIS SET USED FOR CXKV REV AE & BELOW. (2 CARD PWR SUP)

DRAWN	[illegible]	9-15-77	CONTROL DATA	A1 POWER SUPPLY DIAGRAMS	CODE IDENT 19333	C	83322240	Z G
CHECKED								
ENGINEER	R E [illegible]	10-27-77	NORMANDALE DIVISION	TYPE: CXKV	CROSS REF NO 321	SHEET 1 OF 3	PAGE 1-188.5	
APPROVED								

REF. 83214832

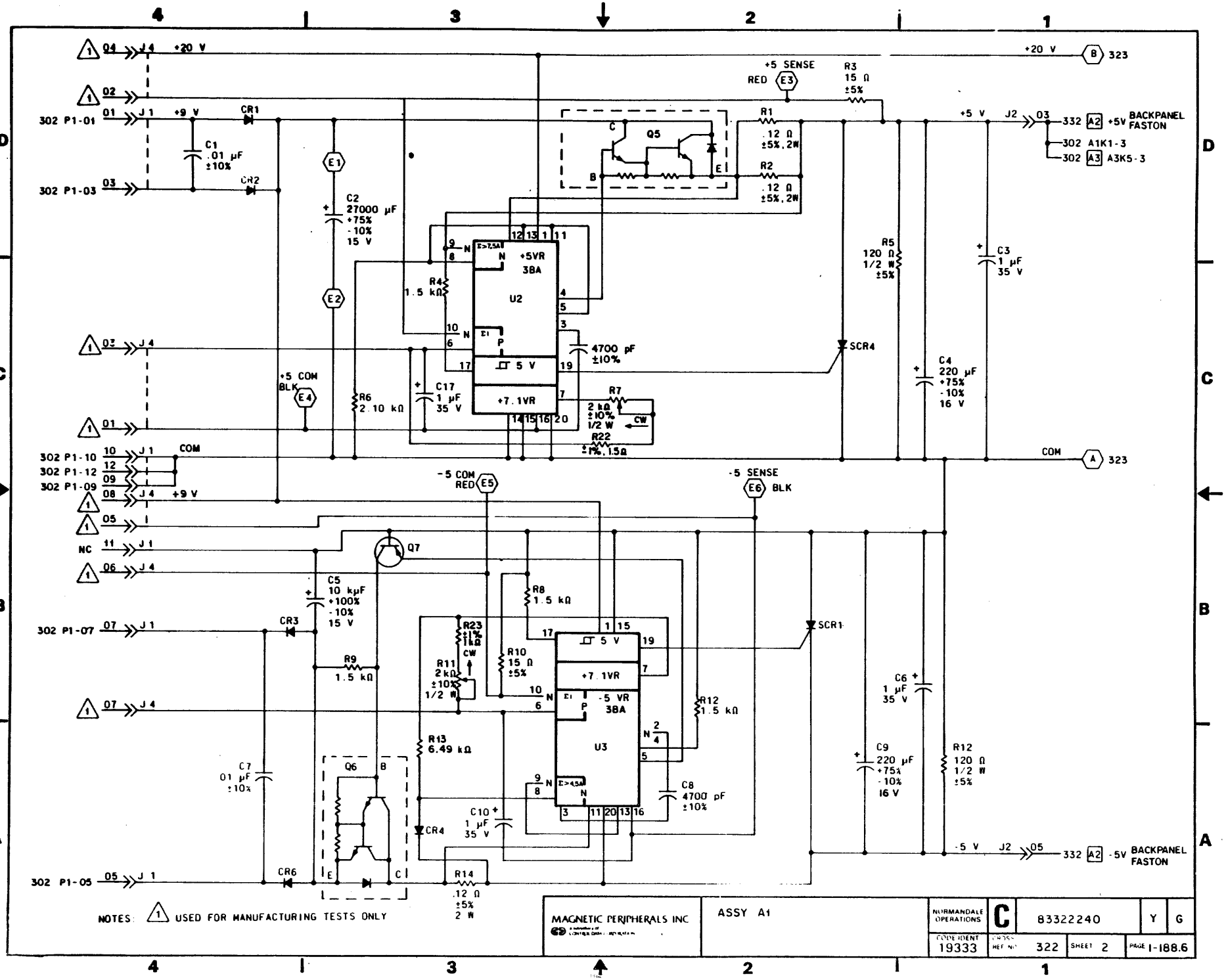
+20 V
+5 SENSE
RED E3
R3 15 Ω ±5%
+20 V B 323
302 P1-01 01 J1 +9 V CR1
302 P1-03 03
C1 .01 µF ±10%
CR2
C2 27000 µF +75% -10% 15 V
R1 .12 Ω ±5%, 2W
R2 .12 Ω ±5%, 2W
Q5
+5 V J2 03 332 A2 +5V BACKPANEL FASTON
302 A1K1-3
302 A3K5-3
U2 +5VR 38A
R4 1.5 kΩ
4700 pF ±10%
5 V
+7.1VR
C17 1 µF 35 V
R6 2.10 kΩ
+5 COM BLK E4
R7 2 kΩ ±10% 1/2 W CW
R22 ±1%, 1.5Ω
SCR4
R5 120 Ω 1/2 W ±5%
C3 1 µF 35 V
C4 220 µF +75% -10% 16 V
302 P1-10 10 J1 COM
302 P1-12 12
302 P1-09 09
302 P1-08 08 J4 +9 V
COM A 323
-5 COM RED E5
-5 SENSE E6 BLK
NC 11 J1
05 J4
06 J4
Q7
C5 10 kµF +100% -10% 15 V
R8 1.5 kΩ
302 P1-07 07 J1
CR3
R9 1.5 kΩ
R23 1% 1kΩ CW
R11 2kΩ ±10% 1/2 W
R10 15 Ω ±5%
5 V
+7.1VR
-5 VR 38A
U3
R12 1.5 kΩ
SCR1
C6 1 µF 35 V
C9 220 µF +75% -10% 16 V
R12 120 Ω 1/2 W ±5%
07 J4
R13 6.49 kΩ
C7 01 µF ±10%
Q6
C8 4700 pF ±10%
C10 1 µF 35 V
CR4
-5 V J2 05 332 A2 -5V BACKPANEL FASTON
302 P1-05 05 J1
CR6
R14 .12 Ω ±5% 2 W
NOTES: 1 USED FOR MANUFACTURING TESTS ONLY
MAGNETIC PERIPHERALS INC
ASSY A1
NORMANDALE OPERATIONS
C
83322240
Y
G
CODE IDENT 19333
REF NO 322
SHEET 2
PAGE 1-188.6

REVISION STATUS OF SHEETS

1	2	3	4	5	6	7	8	9	10	11	12	13	14	15	16	17	18	19	20
A	A	A																	
B	A	B																	
C	A	C																	
D	D	D																	
E	E	E																	

REVISIONS

REV	ECO	DESCRIPTION	DRFT	DATE	CHK'D
A	PE23000	RELEASE	MLA	8-25-76	
B	PE48296	CORRECT DIAGRAMS	SB	11-2-76	
C	PE48402	CORRECT DIAGRAMS	GR	12-20-76	
D	PE48523	CORRECT DIAGRAMS	DM	7-22-77	
E	PE55229	ADD HYBRID PWR UP	MA	1-19-79	

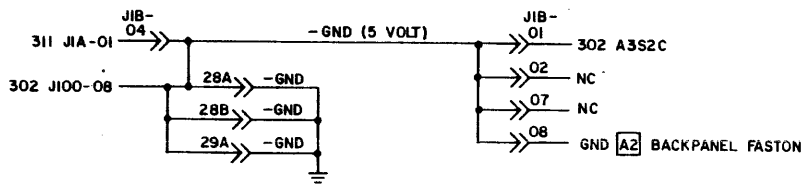

THIS SET USED ON 3 CARD PWR SUP

DRAWN	CONTROL DATA CORPORATION	PLUS AND MINUS 5V POWER SUPPLY DIAGRAMS	CODE IDENT 19333	C	83322240	Z	E
CHECKED							
ENGINEER							
APPROVED	NORMANDALE DIVISION	TYPE ASHV LOC A1A03	CROSS REF NO. 331		SHEET 1 OF 3	PAGE 1-189	

REF 83214833

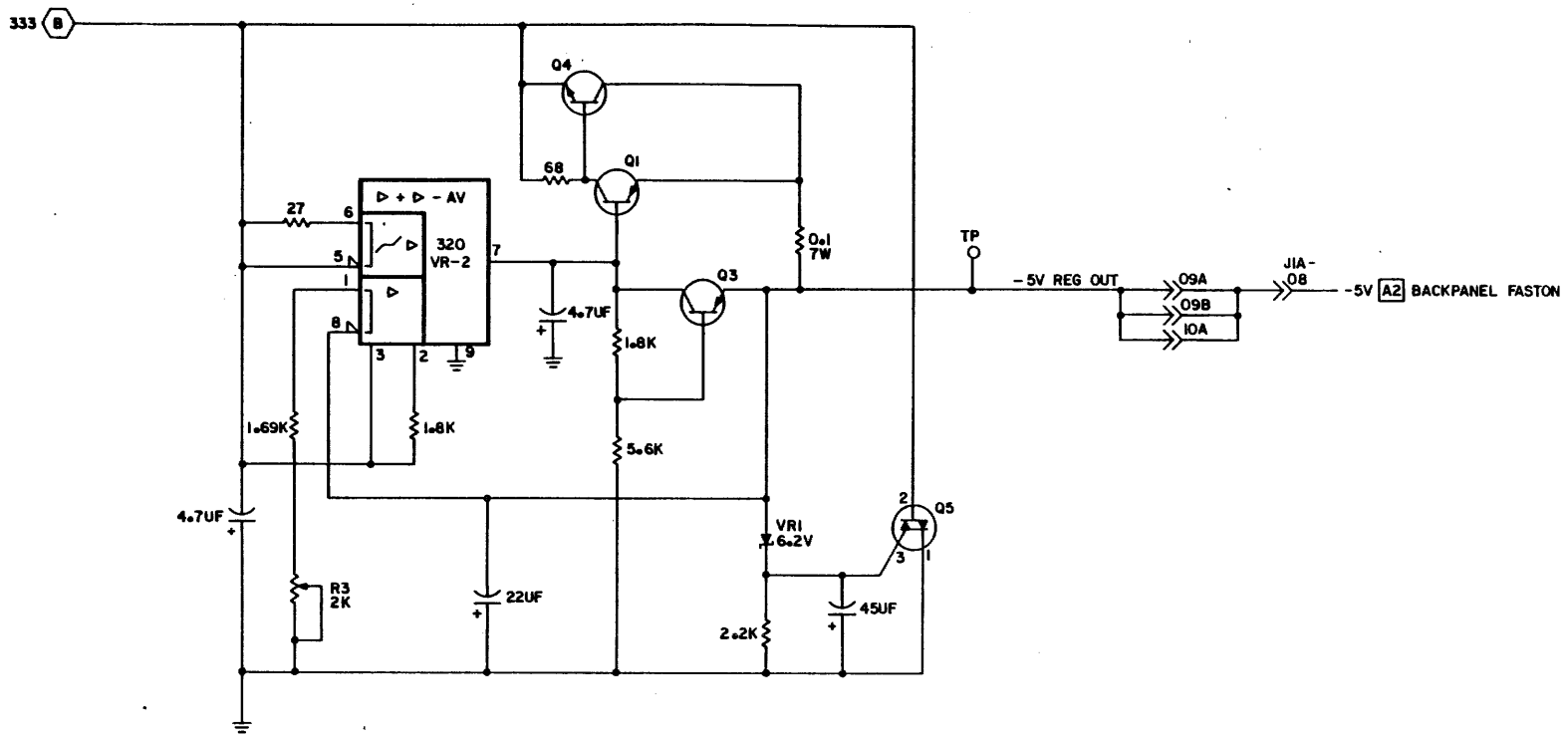

CONTROL DATA CORPORATION NORMANDALE DIVISION	PLUS AND MINUS 5V POWER SUPPLY LOC A1A03	CODE IDENT 19333	C	83322240	J	E
		CROSS REF. 332		SHEET 2	PAGE 1-190	

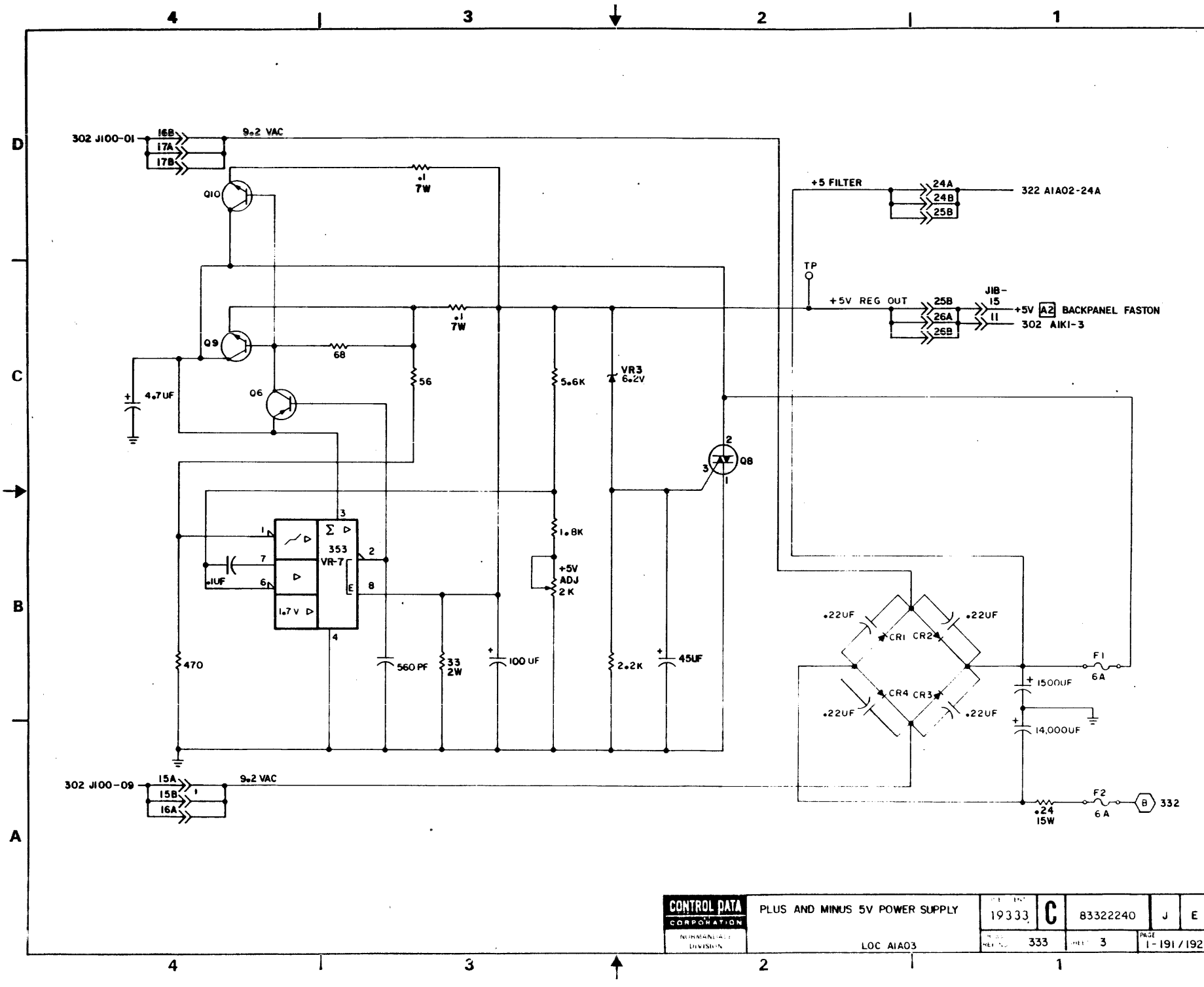

CONTROL DATA CORPORATION NORTHEAST DIVISION	PLUS AND MINUS 5V POWER SUPPLY LOC A1A03	DWG NO 19333	C	83322240	J E
		REV NO 333	REV 3	PAGE 1-191/192	

REVISION STATUS OF SHEETS

1	2	3	4	5	6	7	8	9	10	11	12	13	14	15	16	17	18	19	20
A	A	A	A																
B	B	B	A																
C	C	C	C																
D	C	D	C																
E	E	D	C																
F	E	F	C																

REVISIONS

REV	ECO.	DESCRIPTION	DRFT	DATE	CHK'D
A	PE23000	RELEASED	—		
B	PE48402	CORR DIAG			
C	PE48523	CORR DIAG	DM	7-21-77	
D	PE55085	CORRECT W2 CABLE DWG	GR	3 28 78	
E	PE55229	ADD HYBRID PWR SUP	MA	1-19-79	
F	PE55614	CORRECT DIAGRAM	TH	7-27-79	

NOTE:

1 ALL OF W1 HARNESS ASSY, W6 CABLE ASSY AND W11 & W12 CABLE ASSY'S ARE SHOWN ON CROSS REF 302 AND NOT REPEATED ON THIS DIAGRAM SET.

DRAWN		CONTROL DATA CORPORATION	HARNESS DIAGRAMS	CODE IDENT 19333	C	83322240	L F
CHECKED							
ENGINEER		NORMANDALE DIVISION	W2, W3, W4	NUMBER 341	SHEET 1 OF 4	PAGE 1-193	
APPROVED							

REF 83214834

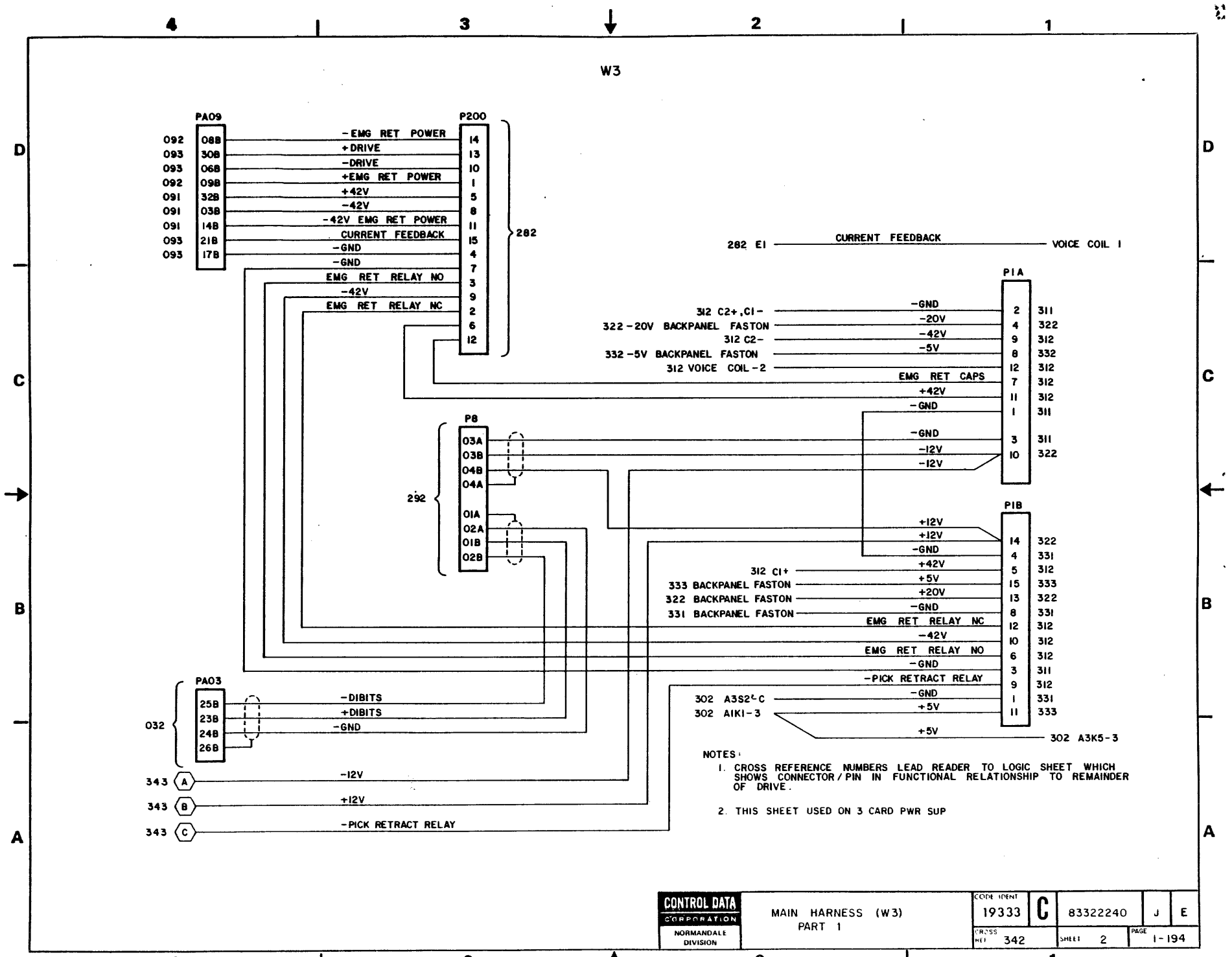
W3
PA09
P200
092 08B -EMG RET POWER 14
093 30B +DRIVE 13
093 06B -DRIVE 10
092 09B +EMG RET POWER 1
091 32B +42V 5
091 03B -42V 8
091 14B -42V EMG RET POWER 11
093 21B CURRENT FEEDBACK 15
093 17B -GND 4
-GND 7
EMG RET RELAY NO 3
-42V 9
EMG RET RELAY NC 2
6
12
282
282 E1 CURRENT FEEDBACK VOICE COIL 1
P1A
312 C2+,C1- -GND 2 311
322 -20V BACKPANEL FASTON -20V 4 322
312 C2- -42V 9 312
332 -5V BACKPANEL FASTON -5V 8 332
312 VOICE COIL -2 12 312
EMG RET CAPS 7 312
+42V 11 312
-GND 1 311
-GND 3 311
-12V 10 322
-12V
P8
292
03A
03B
04B
04A
01A
02A
01B
02B
P1B
+12V
+12V 14 322
-GND 4 331
+42V 5 312
312 C1+ +5V 15 333
333 BACKPANEL FASTON +20V 13 322
322 BACKPANEL FASTON -GND 8 331
331 BACKPANEL FASTON EMG RET RELAY NC 12 312
-42V 10 312
EMG RET RELAY NO 6 312
-GND 3 311
-PICK RETRACT RELAY 9 312
302 A3S2-C -GND 1 331
302 A1K1-3 +5V 11 333
+5V
302 A3K5-3
PA03
032
25B -DIBITS
23B +DIBITS
24B -GND
26B
343 A -12V
343 B +12V
343 C -PICK RETRACT RELAY
NOTES:
1. CROSS REFERENCE NUMBERS LEAD READER TO LOGIC SHEET WHICH SHOWS CONNECTOR/PIN IN FUNCTIONAL RELATIONSHIP TO REMAINDER OF DRIVE.
2. THIS SHEET USED ON 3 CARD PWR SUP
CONTROL DATA CORPORATION
NORMANDALE DIVISION
MAIN HARNESS (W3)
PART 1
CODE IDENT 19333
C
83322240
J
E
CROSS REF 342
SHEET 2
PAGE 1-194

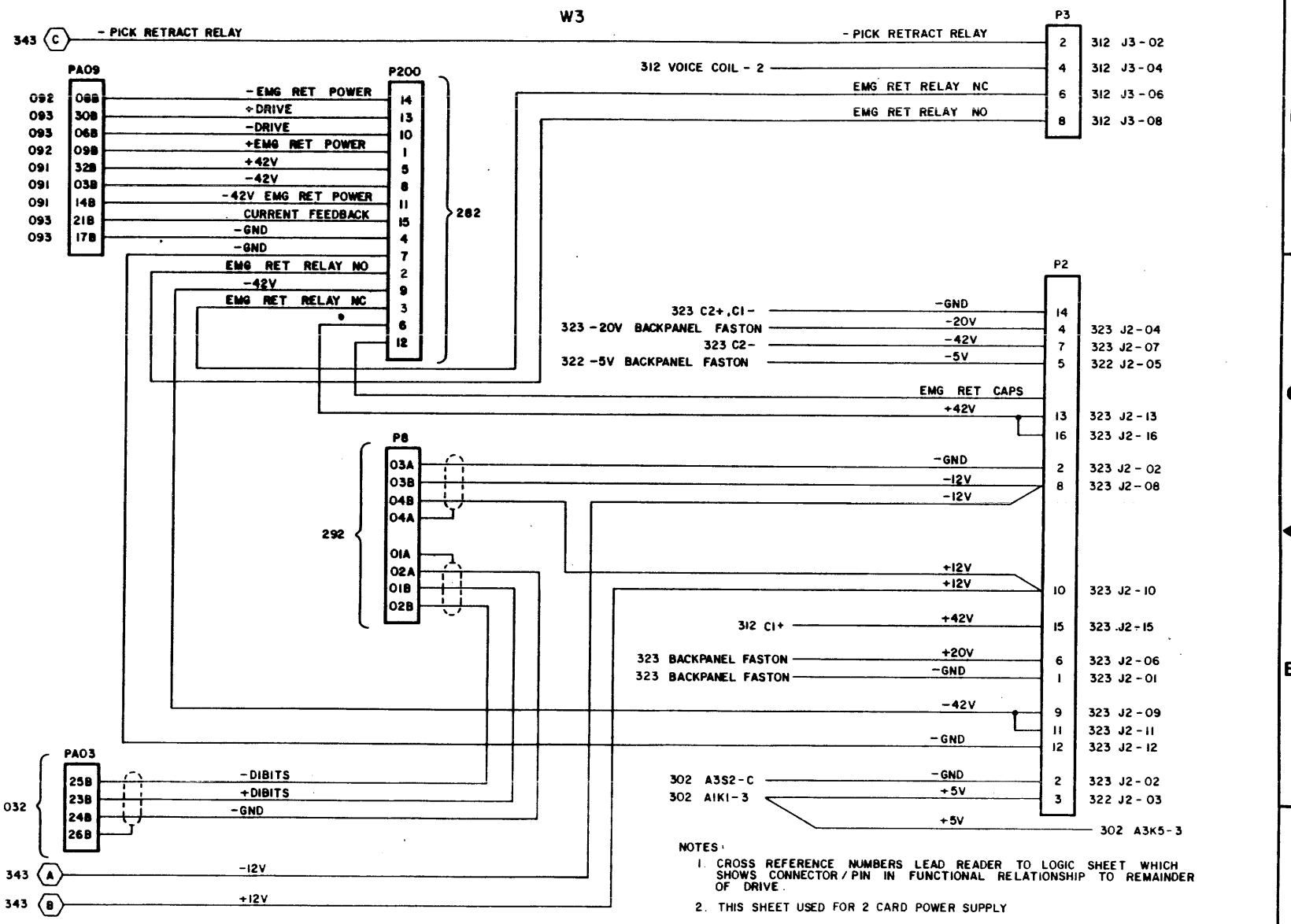

CONTROL DATA NORMANDALE DIVISION	MAIN HARNESS (W3) PART 1	CODE IDENT 19333	C	83322240	J E
		CROSS REF 342		SHEET 2	PAGE 1-194.1/194.2

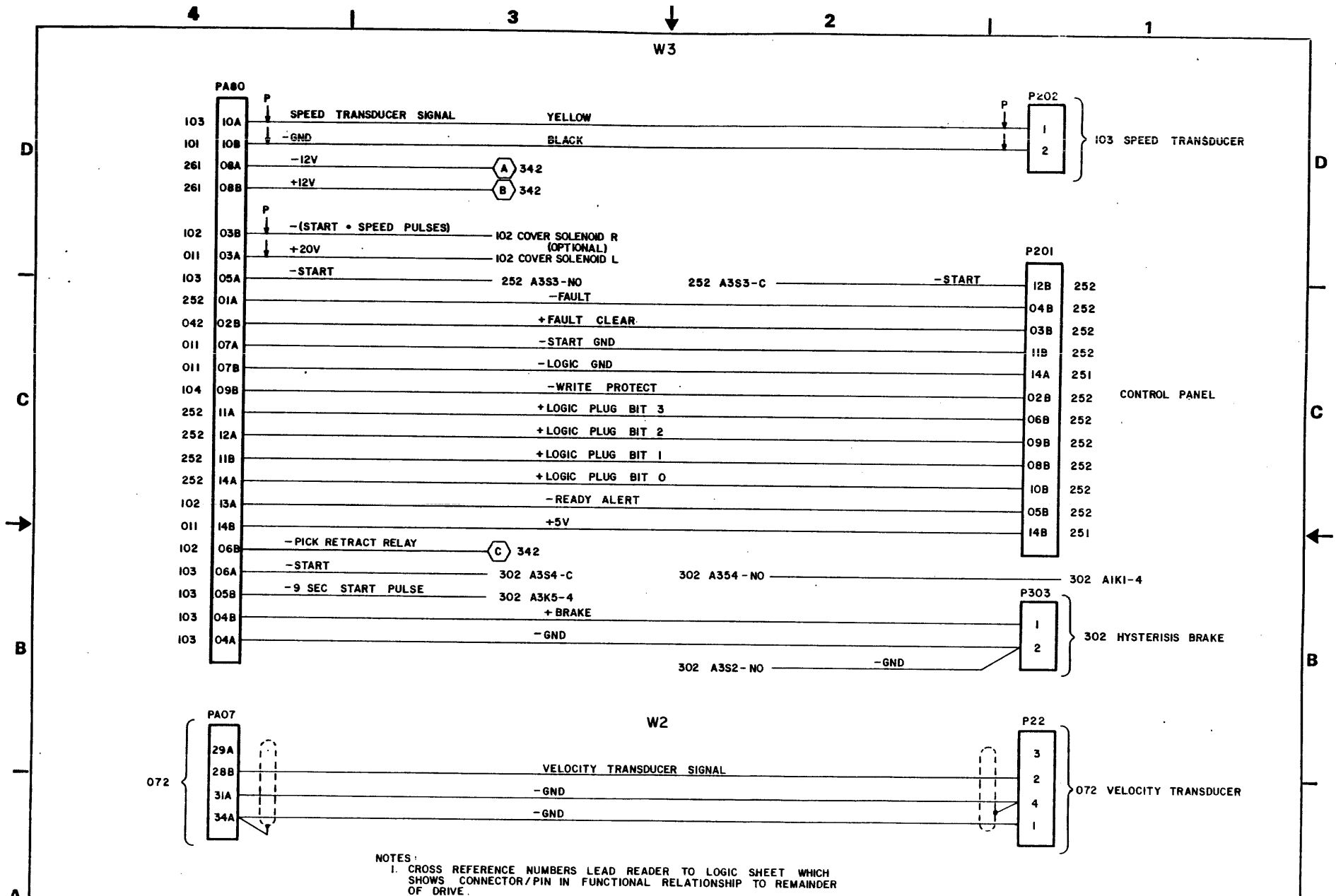

NOTES:
1. CROSS REFERENCE NUMBERS LEAD READER TO LOGIC SHEET WHICH SHOWS CONNECTOR/PIN IN FUNCTIONAL RELATIONSHIP TO REMAINDER OF DRIVE.

CONTROL DATA CORPORATION NORMANDALE DIVISION	MAIN HARNESS (W3) PART 2 VELOCITY CABLE (W2)	CODE IDENT 19333	C	83322240	S F
		CROSS REF NO 343	SHEET 3	PAGE 1-195	

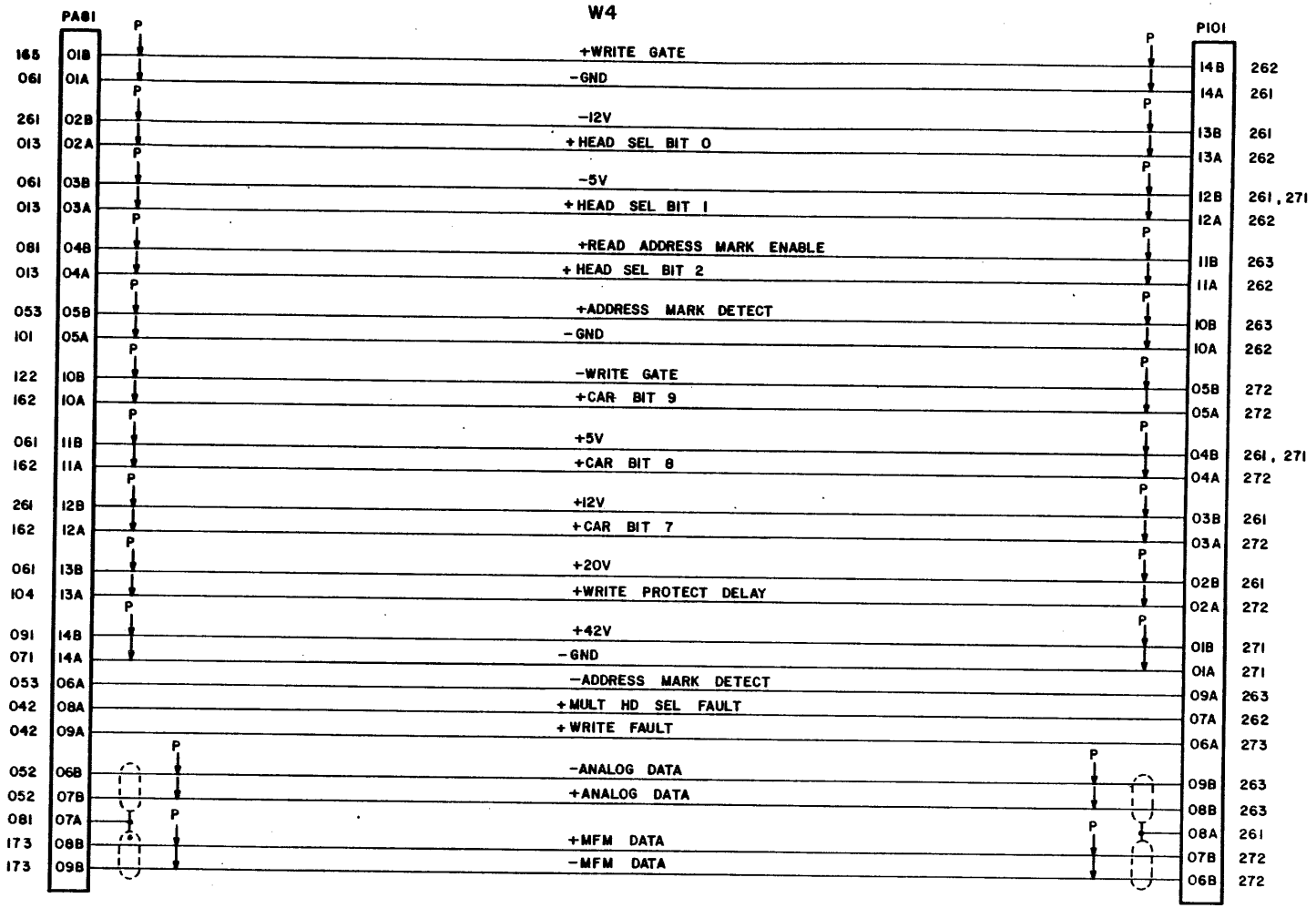

NOTES:
1. CROSS REFERENCE NUMBERS LEAD READER TO LOGIC SHEET WHICH SHOWS CONNECTOR/PIN IN FUNCTIONAL RELATIONSHIP TO REMAINDER OF DRIVE.

CONTROL DATA CORPORATION NORMANDALE DIVISION	READ WRITE CABLE (W4)	CODE IDENT 19333	C	83322240	C	C
		CROSS REF NO 344		SHEET 4	PAGE 1-196	

REVISION STATUS OF SHEETS

1	2	3	4	5	6	7	8	9	10	11	12	13	14	15	16	17	18	19	20
A	A	A	A																

REVISIONS

REV	ECO	DESCRIPTION	DRFT	DATE	CHK'D
A	DJ00399	VDE NEW CREATE	KKB	11-18-82	DK SD

NOTE:

1 ALL OF W1 HARNESS ASSY AND W11 & W12 CABLE ASSYS ARE SHOWN ON CROSS REF 732 AND NOT REPEATED ON THIS DIAGRAM SET.

THIS SET USED FOR BK5C6D

DRAWN	K.BARTSCH	11-18-82	CONTROL DATA	HARNESS DIAGRAMS W2, W3, W4	19333	C	83322240	-Z A
					341		1 4	1-196

REF: 83214872

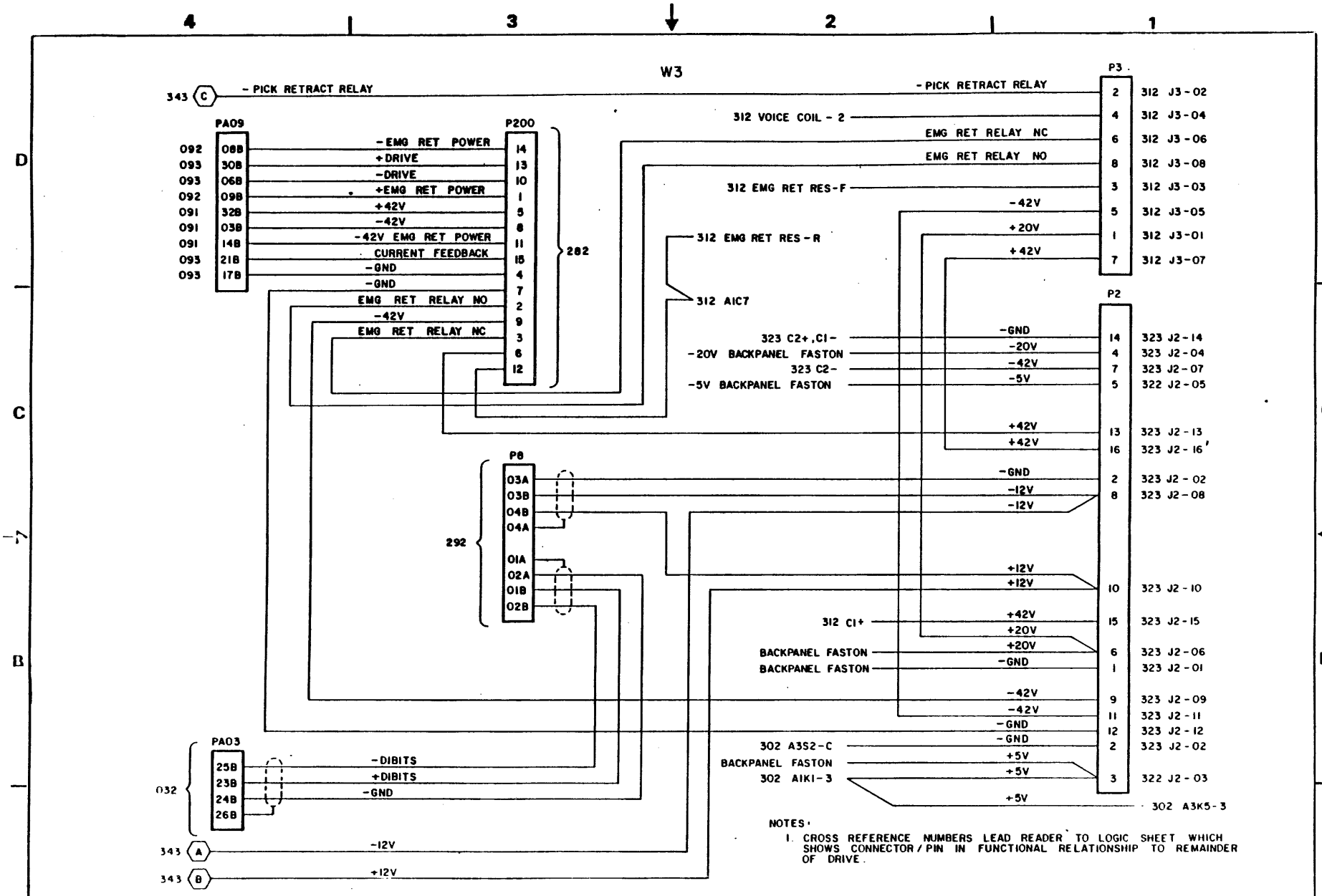

NOTES:

1. CROSS REFERENCE NUMBERS LEAD READER TO LOGIC SHEET WHICH SHOWS CONNECTOR / PIN IN FUNCTIONAL RELATIONSHIP TO REMAINDER OF DRIVE.

CONTROL DATA NORMANDALE DIVISION	MAIN HARNESS (W3) PART 1	CODE IDENT 19333	C	83322240	Z	A
		ROSS NO. 342		SHEET 2	1-196.2	

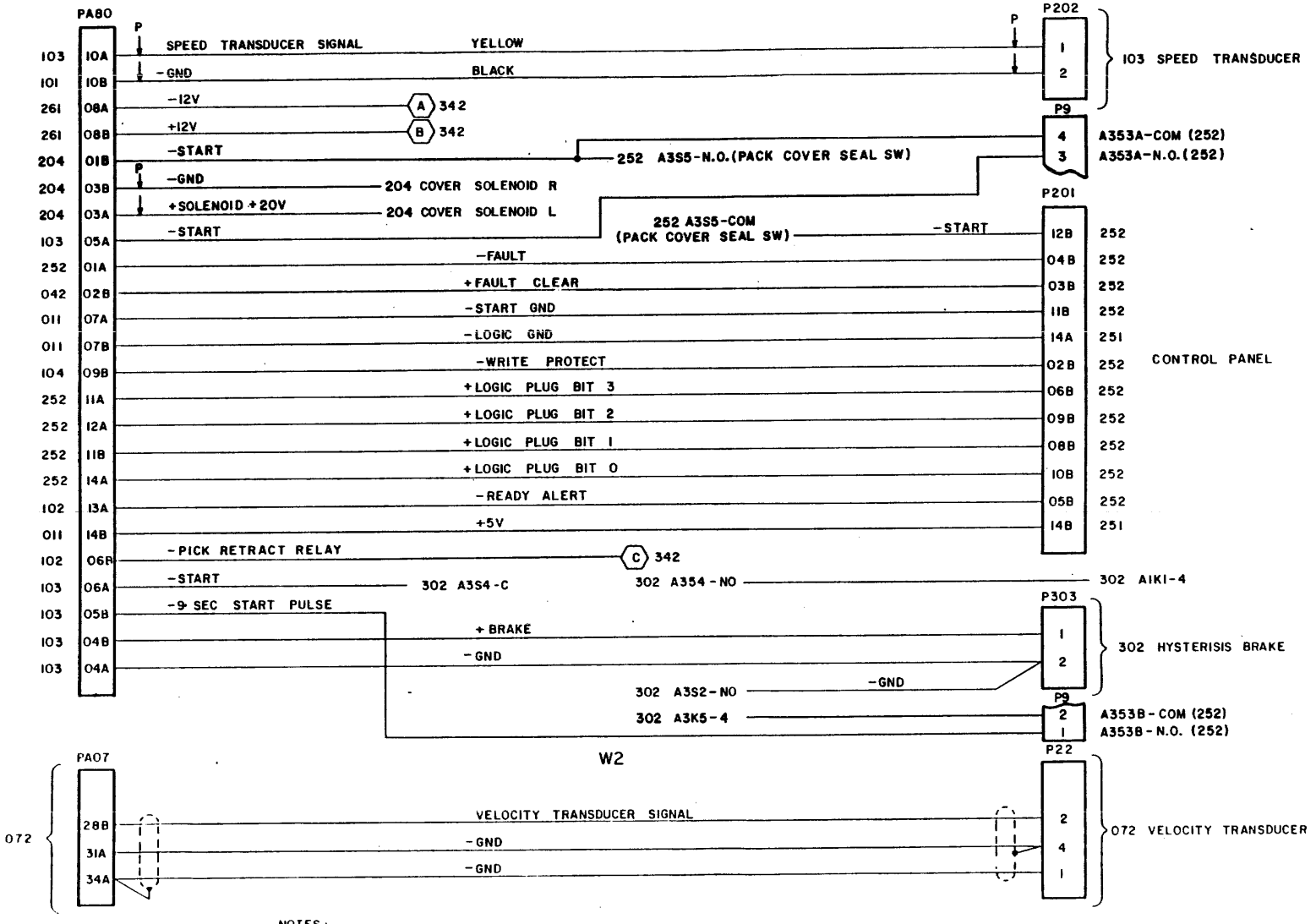

NOTES:
1. CROSS REFERENCE NUMBERS LEAD READER TO LOGIC SHEET WHICH SHOWS CONNECTOR/PIN IN FUNCTIONAL RELATIONSHIP TO REMAINDER OF DRIVE

CONTROL DATA SMALL DISK DIVISION	MAIN HARNESS (W3) PART 2 VELOCITY CABLE (W2)	19333	C	83322240	Z A
		343		3	1-196.3

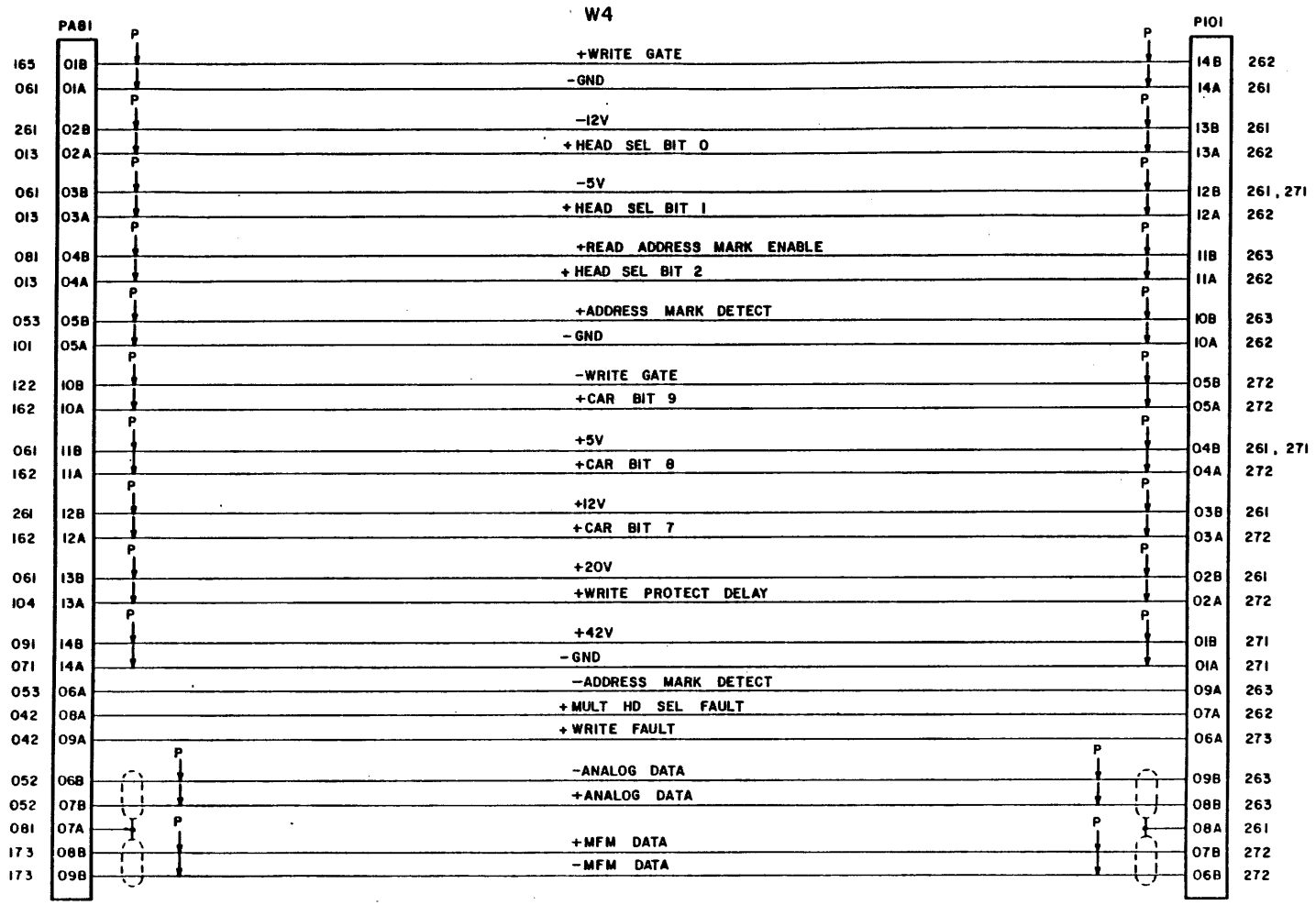

NOTE:
CROSS REFERENCE NUMBERS LEAD READER TO LOGIC SHEET WHICH SHOWS CONNECTOR/PIN IN FUNCTIONAL RELATIONSHIP TO REMAINDER OF DRIVE.

CONTROL DATA CORPORATION SMALL DISK DIVISION	READ WRITE CABLE (W4)	CODE IDENT 19333	C	83322240	Z A
		SCALE NONE	SHEET 344	4	1-196.4

SECTION 2

WIRE LISTS

INTRODUCTION

Section 2 contains the wiring for the backpanels used on the 60 Pin I/O, the 50 Pin I/O, and the 60 Pin I/O with Index and Sector in B Cable. The first part of section 2 explains how to use the list and identifies the columns shown on the lists. Only the wiring for the backpanel is shown on the wire lists. All other wiring is shown on the cabling diagrams.

READING WIRE LISTS

Wire lists show the origin, destination, and Z level of all wirewrap connections on the logic chassis backpanel. The wires are listed in order of card location and pin number. The lowest numbered card location and pin number are listed first and the highest numbered card location and pin number are listed last. The wire list is a double ended list. This means that all wires will be listed twice: first as the origin, then as the destination. Following is an explanation of all the columns used on the wire list (refer to figure 2-1).

SIGNAL NAME OR NUMBER IDENTIFICATION

The signal name or number identification column is the first column on the wire list. The number shown in this column is for factory use only.

ORIGIN/DESTINATION

The origin column identifies the card location and pin number on which the wire begins. The destination column identifies the opposite end of the wire. Both columns contain a six character number that identifies the exact location of the wire. The first three characters represent the card location. The second three characters represent the pin number on which the wire is attached. Following is a typical example of the number that appears in the Origin/Destination column.

Example:

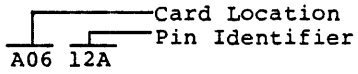

TITLE: WIREWRAP LIST	WL	DOCUMENT NO.: LOGIC W/W	SHEET NO.: 1 of 12	REV.: A

SIGNAL NAME OR NUMBER IDENTIFICATION	ORIGIN	DESTINATION	Z LEVEL	NOTES
102111	A0101B	A0102A	1	
102111	A0102A	A0101B	1	
100108	A0102B	A1708A	1	
100211	A0103A	A0231A	1	
100206	A0230A	A1712A	1	
100205	A0230B	A0612B	1	
100203	A0231A	A1326B	2	
100211	A0231A	A0103A	1	

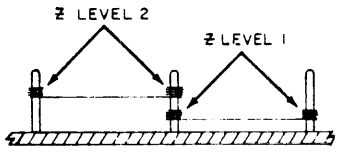

9E82

Figure 2-1. Example of Logic Wirewrap List

Z LEVEL

The Z level refers to the position of the wire located on the pin. There are two Z levels on all pins (refer to figure 2-1). Z level 1 identifies the wirewrap connection closer to the surface of the wirewrap panel. Z level 2 identifies the wirewrap connection farthest from the surface of the wirewrap panel. All pins may contain two wires. However, if the pin contains only one wire, that wire will be connected on Z level 1. The same Z level is maintained at both ends of all wirewrap connections.

NOTES

The notes column is the last column on the wire list. Signal names, history, or other pertinent information is shown in the notes column.

60 PIN I/O

TITLE	WL	DOCUMENT NO.	SHEET NO.	REV.
Logic Wirewrap - Applicable to 60 Pin I/O		77568123/48	1 of 26	Y/AS

SIGNAL NAME OR NUMBER IDENTIFICATION	ORIGIN	DESTINATION	Z LEVEL	NOTES
100416	A0101A	JA8007A	1	
100416	A0101A	JA8007B	2	
300023	A0101B	A0121B	1	
100305	A0104B	A0333A	1	
100101	A0112B	A0127B	2	
100101	A0112B	A0221A	1	
100105	A0113B	B0831A	1	
300022	A0114B	A0234B	1	
300023	A0121B	A0101B	1	
100304	A0122B	A0312B	1	
100103	A0123B	A0623B	1	
100102	A0124B	A0624B	1	
100104	A0126B	B0815A	1	
100101	A0127B	A0112B	2	
100108	A0128B	B0123B	2	
100107	A0130B	B0709A	1	
101020	A0133B	JA8003A	1	
100417	A0134B	JA8014B	1	
100309	A0213B	A0323B	1	
100409	A0214B	A1012B	2	
100308	A0215B	A0325B	1	
200802	A0216A	B0104A	1	
300024	A0216B	A0231A	2	
200621	A0217A	B0633B	1	
200501	A0217B	B1026A	2	
200501	A0217B	B0121B	1	
100101	A0221A	A0112B	1	
200504	A0221B	B0532A	2	
100504	A0222A	A0532B	1	
100504	A0222A	B0123A	2	
300024	A0222B	A0234A	2	
200221	A0223A	B0117B	1	
200217	A0223B	B0203A	2	
200208	A0224A	B0224B	2	
200218	A0224B	B0232B	2	
200206	A0225A	B0122B	1	
200204	A0225B	B0116A	1	
200216	A0226A	B0225A	2	
200202	A0226B	B0121A	1	
200202	A0226B	B0116B	2	
200214	A0227A	B0226A	2	
200210	A0228A	B0226B	2	
200212	A0229A	B0225B	2	
200223	A0230A	B0233B	2	
300024	A0231A	A0216B	2	
300024	A0231A	A0234A	1	
200220	A0232A	B0232A	2	
300024	A0234A	A0222B	2	
300024	A0234A	A0231A	1	
300022	A0234B	A0114B	1	
100301	A0307B	B0928B	1	

TITLE	WL	DOCUMENT NO.	SHEET NO.	REV.
Logic Wirewrap - Applicable to 60 Pin I/O			2	J

SIGNAL NAME OR NUMBER IDENTIFICATION	ORIGIN	DESTI-NATION	Z LEVEL	NOTES
100302	A0308B	B0927B	1	
100303	A0309B	A0826B	1	
100307	A0311B	B0804A	1	
100304	A0312B	A0122B	1	
100309	A0323B	A0213B	1	
100308	A0325B	A0215B	1	
200926	A0327B	B0812A	2	
100306	A0332A	B0805B	1	
100305	A0333A	A0104B	1	
100305	A0333A	B0822B	2	
100418	A0403B	A0903B	1	
100403	A0407A	A1015B	2	
100403	A0407A	B0530B	1	
200108	A0408A	B0102B	1	
100410	A0409A	JA8002B	1	
300007	A0409B	JA8109A	1	
200904	A0410A	B0903B	1	
100411	A0410B	B1015B	2	
100411	A0410B	B0514A	1	
100404	A0411B	A0707A	1	
100404	A0411B	JA8001A	2	
200209	A0412A	B0230A	1	
100405	A0412B	JA8013A	1	
100405	A0412B	A1027B	2	
200201	A0413A	JA8110B	1	
200201	A0413A	B0227B	2	
200203	A0413B	A0531B	2	
200203	A0413B	B0229A	1	
100402	A0414A	B0931B	1	
300001	A0414B	JA8108A	1	
100407	A0415B	A1023B	1	
101010	A0416B	A1021A	1	
101002	A0424B	A1021B	1	
200919	A0425B	B0817B	2	
100505	A0426A	A0525B	1	
100406	A0426B	B0324B	1	
100413	A0427A	B0513A	2	
100413	A0427A	JA8012A	1	
100412	A0428B	JA8011A	1	
100412	A0428B	B0513B	2	
200225	A0429A	B0204A	1	
200224	A0429B	B0204B	1	
100415	A0430A	JA8014A	1	
100415	A0430A	B0512A	2	
100804	A0430B	A0811A	1	
200104	A0431A	B0115A	1	
100414	A0431B	B0512B	2	
100414	A0431B	JA8011B	1	
200103	A0432A	B0115B	1	
100417	A0432B	A0932B	1	
201004	A0433A	A0523B	1	
300008	A0433A	A0811B	2	

TITLE	WL	DOCUMENT NO.	SHEET NO.	REV.
Logic Wirewrap - Applicable to 60 Pin I/O			3	J

SIGNAL NAME OR NUMBER IDENTIFICATION	ORIGIN	DESTINATION	Z LEVEL	NOTES
300008	A0433A	JA8232B	1	
100502	A0503B	A0610B	1	
100501	A0504B	A0609B	1	
300003	A0507B	JA8107B	1	
300002	A0508B	JA8106B	1	
300004	A0521B	JA8105B	1	
300005	A0522B	JA8106A	1	
300008	A0523B	A0811B	1	
201004	A0523B	A0433A	1	
201004	A0523B	A0811B	2	
200222	A0524B	B0202B	1	
100505	A0525B	A0426A	1	
200211	A0527B	A0824A	2	
100403	A0528B	B0707B	1	
100503	A0530B	A0622B	1	
200203	A0531B	A0612B	1	
200203	A0531B	A0413B	2	
100504	A0532B	A0222A	1	
300013	A0601A	JA8101A	1	
300019	A0601B	JA8103B	1	
200219	A0603B	B0233A	1	
200215	A0604B	B0231B	1	
100501	A0609B	A0504B	1	
100502	A0610B	A0503B	1	
200203	A0612B	A0824B	2	
200203	A0612B	A0531B	1	
200211	A0613B	A0824A	1	
200211	A0613B	B0231A	2	
100503	A0622B	A0530B	1	
100103	A0623B	A0123B	1	
100102	A0624B	A0124B	1	
100601	A0626B	B0331B	1	
100602	A0627B	B0331A	1	
300021	A0633B	JA8113B	1	
300020	A0634B	JA8111B	1	
300014	A0701A	JA8114A	1	
200918	A0702A	B0931A	1	
100404	A0707A	A0411B	1	
100404	A0707A	B0933B	2	
200922	A0707B	B0929B	1	
200923	A0708A	B0912B	1	
200911	A0710A	B0913A	1	
200610	A0711B	B0602A	1	
200612	A0712B	B0603A	1	
200613	A0713A	B0604A	1	
200616	A0713B	B0610A	1	
200617	A0715A	B0609B	1	
100809	A0715B	A0826A	2	
200619	A0716A	B0611B	1	
200902	A0716B	A0923B	2	
200618	A0717A	B0609A	1	
200907	A0717B	B0916A	1	

TITLE	WL	DOCUMENT NO.	SHEET NO.	REV.
Logic Wirewrap - Applicable to 60 Pin I/O			4	J

SIGNAL NAME OR NUMBER IDENTIFICATION	ORIGIN	DESTINATION	Z LEVEL	NOTES
200901	A0721B	A0922B	2	
200905	A0722B	B0916B	1	
100808	A0723B	A0809A	1	
200611	A0725B	B0602B	1	
100701	A0726B	A0928B	1	
200608	A0727A	B0604B	1	
100703	A0727B	A0808B	1	
100902	A0728B	A0912B	1	
100702	A0730B	A0802A	1	
300015	A0801A	JA8107A	1	
100702	A0802A	A0730B	1	
100801	A0808A	B0816A	1	
100703	A0808B	A0727B	1	
100808	A0809A	A0723B	1	
100802	A0809B	B0810A	1	
200924	A0810B	B0906B	2	
100804	A0811A	A0430B	1	
300008	A0811B	A0523B	1	
201004	A0811B	B1008A	1	
201004	A0811B	A0523B	2	
300008	A0811B	A0433A	?	
200908	A0812A	B0914A	2	
100807	A0812B	B0905A	1	
200910	A0813A	B0922A	1	
200913	A0813B	B0930A	1	
200804	A0814B	B0810B	1	
200903	A0816A	B0904B	1	
200207	A0821A	B0229B	1	
100806	A0822A	A0927A	1	
200205	A0822B	B0228B	1	
100805	A0823A	B0828B	1	
200906	A0823B	B0906A	1	
200211	A0824A	A0613B	1	
200211	A0824A	A0527B	?	
200203	A0824B	A0612B	?	
100803	A0825A	JA8104B	1	
200925	A0825B	B0926A	1	
100809	A0826A	A0715B	?	
100809	A0826A	A0906A	1	
100303	A0826B	A0309B	1	
200912	A0832A	B0903A	?	
100901	A0833A	A0924B	1	
101011	A0902A	A1002B	?	
101011	A0902B	A1002B	1	
100418	A0903A	A0903B	?	
100418	A0903A	A0904A	1	
100418	A0903B	A0403B	1	
100418	A0903B	A0903A	?	
100418	A0904A	A0904B	2	
100418	A0904A	A0903A	1	
100418	A0904B	A0904A	?	
100809	A0906A	A0826A	1	

TITLE	WL	DOCUMENT NO.	SHEET NO.	REV.
Logic Wirewrap - Applicable to 60 Pin I/O			5	J/AS

SIGNAL NAME OR NUMBER IDENTIFICATION	ORIGIN	DESTI-NATION	Z LEVEL	NOTES
100902	A0912B	A0728B	1	
200922	A0915B	B0925A	1	
200921	A0916B	B0921B	2	
200901	A0922B	A0721B	2	
200901	A0922B	B0908A	1	
200902	A0923B	B0907A	1	
200902	A0923B	A0716B	?	
100901	A0924B	A0833A	1	
100901	A0924B	B0915A	2	
200926	A0925B	B0913B	2	
200609	A0926B	B0617B	1	
100806	A0927A	A0822A	1	
200909	A0927B	B0930B	1	
100701	A0928B	A0726B	1	
300018	A0931A	A0932A	1	
300018	A0931A	A0931B	2	
300018	A0931B	A0931A	2	
300018	A0932A	A1032B	?	
300018	A0932A	A0931A	1	
300018	A0932B	JA8114B	?	
100417	A0932B	A0432B	1	
101012	A0933A	A1033B	2	
101012	A0933B	A1033B	1	
300006	A1001A	JA8105A	1	
101005	A1002A	JA8113A	1	
101011	A1002B	A0902A	2	
101011	A1002B	A0902B	1	
101009	A1003A	JA8230B	1	
101009	A1003A	JA8229B	1	
101009	A1003A	JA8330B	2	
101009	A1003A	JA8329B	?	
101008	A1003B	JA8229A	1	
101008	A1003B	JA8301A	?	
101008	A1003B	JA8201A	1	
101008	A1003B	JA8329A	?	
101007	A1004B	JA8331A	?	
101007	A1004B	JA8231A	1	
101007	A1004B	JA8330A	?	
101007	A1004B	JA8230A	1	
100407	A1005B	A1023B	2	
	A1009A	JA8230A	1	Used on BK5C1E/F only
	A1009B	JA8230B	1	Used on BK5C1E/F only
100404	A1012A	JA8001A	1	
100409	A1012B	JA8009B	1	
100409	A1012B	A0214B	?	
101006	A1013A	B0532B	1	
101004	A1014B	B0912A	1	Not used on BK5C1E/F only
	A1014B	B0802A	1	Used on BK5C1E/F only
100403	A1015B	B1016A	1	
100403	A1015B	A0407A	2	
101003	A1017A	B0923B	1	
200921	A1017B	B0804B	2	
101010	A1021A	A0416B	1	
101002	A1021B	A0424B	1	
101001	A1022A	B0926B	1	

TITLE	WL	DOCUMENT NO.	SHEET NO.	REV.
Logic Wirewrap - Applicable to 60 Pin I/O			6	J

SIGNAL NAME OR NUMBER IDENTIFICATION	ORIGIN	DESTINATION	Z LEVEL	NOTES
100407	A1023B	A1005B	2	
100407	A1023B	A0415B	1	
101015	A1026A	JA8006A	1	
100408	A1026B	JA8005A	1	
101018	A1027A	JA8010A	1	
100405	A1027B	A0412B	2	
101013	A1028A	JA8005B	1	
101017	A1028B	JA8003B	1	
101014	A1029A	JA8006B	1	
101016	A1029B	JA8004B	1	
200927	A1030B	JA8004A	2	
300018	A1032B	A0932A	2	
300018	A1032B	JA8114B	1	
101012	A1033B	A0933A	2	
101012	A1033B	A0933B	1	
101019	A1034A	JA8010B	1	
200108	B0102B	A0408A	1	
200211	B0103A	B0726B	2	
200211	B0103A	B0231A	1	
200802	B0104A	B0304A	2	
200802	B0104A	A0216A	1	
200801	B0104B	B0304B	2	
200114	B0105A	JA8226A	1	
200114	B0105A	JA8225A	1	
200113	B0105B	JA8225B	1	
200113	B0105B	JA8226B	1	
200112	B0106A	JA8218A	1	
200112	B0106A	JA8219A	1	
200111	B0106B	JA8219B	1	
200111	B0106B	JA8218B	1	
200622	B0107A	B0307A	2	
200915	B0107B	B0307B	2	
200118	B0108A	JA8216A	1	
200118	B0108A	JA8217A	1	
200117	B0108B	JA8217B	1	
200117	B0108B	JA8216B	1	
200116	B0109A	JA8215A	1	
200116	B0109A	JA8216A	1	
200115	B0109B	JA8216B	1	
200115	B0109B	JA8215B	1	
200102	B0110A	B0521A	1	
200101	B0110B	B0516A	1	
200132	B0111A	JA8239A	1	
200132	B0111A	JA8239B	1	
200131	B0111B	JA8239B	1	
200131	B0111B	JA8240A	1	
200134	B0112A	JA8238B	1	
200133	B0112B	JA8238A	1	
200136	B0113A	JA8227B	1	
200136	B0113A	JA8226B	1	
200135	B0113B	JA8226A	1	
200135	B0113B	JA8227A	1	

TITLE	WL	DOCUMENT NO.	SHEET NO.	REV.
Logic Wirewrap - Applicable to 60 Pin I/O			7	J

SIGNAL NAME OR NUMBER IDENTIFICATION	ORIGIN	DESTINATION	Z LEVEL	NOTES
200138	B0114A	JA8228B	1	
200138	B0114A	JA8227B	1	
200137	B0114B	JA8228A	1	
200137	B0114B	JA8227A	1	
200104	B0115A	A0431A	1	
200103	B0115B	A0432A	1	
200204	B0116A	A0225B	1	
200204	B0116A	B0227A	2	
200202	B0116B	A0226B	2	
200924	B0117A	B0626A	1	
200221	B0117B	B0202A	2	
200221	B0117B	A0223A	1	
200202	B0121A	A0226B	1	
200202	B0121A	B0224A	2	
200501	B0121B	B0203B	2	
200501	B0121B	A0217B	1	
200110	B0122A	B0134A	1	
200206	B0122B	B0228A	2	
200206	B0122B	A0225A	1	
100504	B0123A	B0323A	1	
100504	B0123A	A0222A	2	
100108	B0123B	A0128B	2	
100101	B0123B	B0323B	1	
200912	B0124A	B0324A	1	
200912	B0124A	B0632A	2	
100406	B0124B	B0324B	2	
200122	B0125A	JA8219A	1	
200122	B0125A	JA8220A	1	
200121	B0125B	JA8219B	1	
200121	B0125B	JA8220B	1	
200120	B0126A	JA8217A	1	
200120	B0126A	JA8218A	1	
200119	B0126B	JA8219B	1	
200119	B0126B	JA8217B	1	
200124	B0127A	JA8220A	1	
200124	B0127A	JA8221A	1	
200123	B0127B	JA8220B	1	
200123	B0127B	JA8221B	1	
200126	B0128A	JA8234A	1	
200126	B0128A	JA8235B	1	
200125	B0128B	JA8233B	1	
200125	B0128B	JA8235A	1	
200130	B0129A	JA8237B	1	
200130	B0129A	JA8237A	1	
200129	B0129B	JA8237A	1	
200129	B0129B	JA8236B	1	
200128	B0130A	JA8235A	1	
200128	B0130A	JA8236A	1	
200127	B0130B	JA8235B	1	
200127	B0130B	JA8236B	1	
100602	B0131A	B0331A	2	
100601	B0131B	B0331B	2	

TITLE	WL	DOCUMENT NO.	SHEET NO.	REV.
Logic Wirewrap - Applicable to 60 Pin I/O			8	J

SIGNAL NAME OR NUMBER IDENTIFICATION	ORIGIN	DESTINATION	Z LEVEL	NOTES
200105	B0132A	JA8102A	1	
200107	B0132B	JA8104A	1	
200106	B0133B	JA8103A	1	
300012	B0134A	JA8201B	?	
200110	B0134A	B0122A	1	
200221	B0202A	B0117B	?	
200221	B0202A	B0402A	1	
200222	B0202B	A0524B	1	
200217	B0203A	A0223B	?	
200217	B0203A	B0403A	1	
200501	B0203B	B0533A	1	
200501	B0203B	B0121B	?	
200225	B0204A	A0429A	1	
200224	B0204B	A0429B	1	
200257	B0205A	JA8224B	1	
200257	B0205A	JA8223B	1	
200256	B0205B	JA8223A	1	
200256	B0205B	JA8224A	1	
200255	B0206A	JA8225B	1	
200255	B0206A	JA8224B	1	
200254	B0206B	JA8224A	1	
200254	B0206B	JA8225A	1	
200253	B0207A	JA8204B	1	
200253	B0207A	JA8203B	1	
200252	B0207B	JA8203A	1	
200252	B0207B	JA8204A	1	
200251	B0208A	JA8214B	1	
200251	B0208A	JA8215B	1	
200250	B0208B	JA8214A	1	
200250	B0208B	JA8215A	1	
200245	B0209A	JA8213B	1	
200245	B0209A	JA8212B	1	
200244	B0209B	JA8213A	1	
200244	B0209B	JA8212A	1	
200243	B0210A	JA8214B	1	
200243	B0210A	JA8213B	1	
200243	B0210A	B1022A	?	
200242	B0210B	B1022B	?	
200242	B0210B	JA8213A	1	
200242	B0210B	JA8214A	1	
200249	B0211A	JA8202B	1	
200249	B0211A	JA8203B	1	
200248	B0211B	JA8202A	1	
200248	B0211B	JA8203A	1	
200247	B0212A	JA8201B	1	
200247	B0212A	JA8202B	1	
200246	B0212B	JA8201A	1	
200246	B0212B	JA8202A	1	
200241	B0213A	JA8211B	1	
200241	B0213A	JA8212B	1	
200240	B0213B	JA8212A	1	
200240	B0213B	JA8211A	1	

TITLE	WL	DOCUMENT NO.	SHEET NO.	REV.
Logic Wirewrap - Applicable to 60 Pin I/O			9	J

SIGNAL NAME OR NUMBER IDENTIFICATION	ORIGIN	DESTINATION	Z LEVEL	NOTES
200239	B0214A	JA8210B	1	
200239	B0214A	JA8211B	1	
200238	B0214B	JA8211A	1	
200238	B0214B	JA8210A	1	
200237	B0215A	JA8210B	1	
200237	B0215A	JA8209B	1	
200236	B0215B	JA8209A	1	
200236	B0215B	JA8210A	1	
200235	B0216A	JA8208B	1	
200235	B0216A	JA8209B	1	
200234	B0216B	JA8209A	1	
200234	B0216B	JA8208A	1	
200233	B0217A	JA8207B	1	
200233	B0217A	JA8208B	1	
200232	B0217B	JA8207A	1	
200232	B0217B	JA8208A	1	
200231	B0221A	JA8206B	1	
200231	B0221A	JA8207B	1	
200230	B0221B	JA8207A	1	
200230	B0221B	JA8206A	1	
200229	B0222A	JA8206B	1	
200229	B0222A	JA8205B	1	
200228	B0222B	JA8206A	1	
200228	B0222B	JA8205A	1	
200227	B0223A	JA8205B	1	
200227	B0223A	JA8204B	1	
200226	B0223B	JA8204A	1	
200226	B0223B	JA8205A	1	
200202	B0224A	B0424A	1	
200202	B0224A	B0121A	?	
200208	B0224B	B0424B	1	
200208	B0224B	A0224A	?	
200216	B0225A	A0226A	?	
200216	B0225A	B0425A	1	
200212	B0225B	A0229A	?	
200212	B0225B	B0425B	1	
200214	B0226A	A0227A	?	
200214	B0226A	B0426A	1	
200210	B0226B	B0426B	1	
200210	B0226B	A0228A	?	
200204	B0227A	B0116A	?	
200204	B0227A	B0427A	1	
200201	B0227B	B0616B	1	
200201	B0227B	A0413A	?	
200206	B0228A	B0428A	1	
200206	B0228A	B0122B	?	
200205	B0228B	A0822B	1	
200203	B0229A	A0413B	1	
200207	B0229B	A0821A	1	
200209	B0230A	A0412A	1	
200213	B0230B	B0812B	1	
200211	B0231A	A0613B	?	

TITLE	WL	DOCUMENT NO.	SHEET NO.	REV.
Logic Wirewrap - Applicable to 60 Pin I/O			10	J

SIGNAL NAME OR NUMBER IDENTIFICATION	ORIGIN	DESTINATION	Z LEVEL	NOTES
200211	B0231A	B0103A	1	
200215	B0231B	A0604B	1	
200220	B0232A	A0232A	2	
200220	B0232A	B0432A	1	
200218	B0232B	A0224B	2	
200218	B0232B	B0432B	1	
200219	B0233A	A0603B	1	
200223	B0233B	B0433B	1	
200223	B0233B	A0230A	2	
300025	B0234A	JA8333A	2	
300025	B0234A	JA8233A	1	
200802	B0304A	B0813B	1	
200802	B0304A	B0104A	2	
200801	B0304B	B0104B	2	
200801	B0304B	B0821B	1	
200308	B0305A	JA8325A	1	
200308	B0305A	JA8326A	1	
200307	B0305B	JA8326B	1	
200307	B0305B	JA8325B	1	
200306	B0306A	JA8318A	1	
200306	B0306A	JA8319A	1	
200305	B0306B	JA8319B	1	
200305	B0306B	JA8318B	1	
200622	B0307A	B0107A	2	
200622	B0307A	B0614B	1	
200915	B0307B	B0107B	2	
200915	B0307B	B0911A	1	
200312	B0308A	JA8316A	1	
200312	B0308A	JA8317A	1	
200311	B0308B	JA8317B	1	
200311	B0308B	JA8316B	1	
200310	B0309A	JA8315A	1	
200310	B0309A	JA8316A	1	
200309	B0309B	JA8316B	1	
200309	B0309B	JA8315B	1	
200302	B0310A	B0517B	1	
200301	B0310B	B0515B	1	
200326	B0311A	JA8339B	1	
200326	B0311A	JA8339A	1	
200325	B0311B	JA8340A	1	
200325	B0311B	JA8339B	1	
200328	B0312A	JA8339B	1	
200327	B0312B	JA8338A	1	
200330	B0313A	JA8327B	1	
200330	B0313A	JA8326B	1	
200329	B0313B	JA8327A	1	
200329	B0313B	JA8326A	1	
200332	B0314A	JA8327B	1	
200332	B0314A	JA8328B	1	
200331	B0314B	JA8327A	1	
200331	B0314B	JA8328A	1	
200304	B0315A	B0511A	1	

TITLE	WL	DOCUMENT NO.	SHEET NO.	REV.
Logic Wirewrap - Applicable to 60 Pin I/O			11	J

SIGNAL NAME OR NUMBER IDENTIFICATION	ORIGIN	DESTINATION	Z LEVEL	NOTES
200303	B0315B	B0510B	1	
200504	B0321B	B0403B	2	
200504	B0321B	B1030A	1	
100504	B0323A	B0123A	1	
100101	B0323B	B0123B	1	
200912	B0324A	B0605B	2	
200912	B0324A	B0124A	1	
100406	B0324B	B0124B	2	
100406	B0324B	A0426B	1	
200316	B0325A	JA8319A	1	
200316	B0325A	JA8320A	1	
200315	B0325B	JA8319B	1	
200315	B0325B	JA8320B	1	
200314	B0326A	JA8317A	1	
200314	B0326A	JA8318A	1	
200313	B0326B	JA8317B	1	
200313	B0326B	JA8318B	1	
200318	B0327A	JA8320A	1	
200318	B0327A	JA8321A	1	
200317	B0327B	JA8320B	1	
200317	B0327B	JA8321B	1	
200320	B0328A	JA8335B	1	
200320	B0328A	JA8334A	1	
200319	B0328B	JA8335A	1	
200319	B0328B	JA8333B	1	
200324	B0329A	JA8337B	1	
200324	B0329A	JA8337A	1	
200323	B0329B	JA8337A	1	
200323	B0329B	JA8336B	1	
200322	B0330A	JA8336A	1	
200322	B0330A	JA8335A	1	
200321	B0330B	JA8336B	1	
200321	B0330B	JA8335B	1	
100602	B0331A	B0131A	2	
100602	B0331A	A0627B	1	
100601	B0331B	B0131B	2	
100601	B0331B	A0626B	1	
300026	B0334A	JA8334B	2	
300026	B0334A	JA8234B	1	
200221	B0402A	B0202A	1	
200401	B0402B	B0732B	1	
200217	B0403A	B0203A	1	
200217	B0403A	B0531A	2	
200504	B0403B	B0321B	2	
200504	B0403B	B0532A	1	
200403	B0404A	B0503B	1	
200402	B0404B	B0510A	1	
200435	B0405A	JA8323B	1	
200435	B0405A	JA8324B	1	
200434	B0405B	JA8323A	1	
200434	B0405B	JA8324A	1	
200433	B0406A	JA8325B	1	

TITLE		DOCUMENT NO.	SHEET NO.	REV.
Logic Wirewrap - Applicable to 60 Pin I/O	WL		12	J

SIGNAL NAME OR NUMBER IDENTIFICATION	ORIGIN	DESTINATION	Z LEVEL	NOTES
200433	B0406A	JA8324B	1	
200432	B0406B	JA8325A	1	
200432	B0406B	JA8324A	1	
200431	B0407A	JA8303B	1	
200431	B0407A	JA8304B	1	
200430	B0407B	JA8303A	1	
200430	B0407B	JA8304A	1	
200429	B0408A	JA8314B	1	
200429	B0408A	JA8315B	1	
200428	B0408B	JA8314A	1	
200428	B0408B	JA8315A	1	
200423	B0409A	JA8312B	1	
200423	B0409A	JA8313B	1	
200422	B0409B	JA8312A	1	
200422	B0409B	JA8313A	1	
200421	B0410A	JA8314B	1	
200421	B0410A	B1023A	2	
200421	B0410A	JA8313B	1	
200420	B0410B	B1023B	2	
200420	B0410B	JA8314A	1	
200420	B0410B	JA8313A	1	
200427	B0411A	JA8302B	1	
200427	B0411A	JA8303B	1	
200426	B0411B	JA8302A	1	
200426	B0411B	JA8303A	1	
200425	B0412A	JA8302B	1	
200425	B0412A	JA8301B	1	
200424	B0412B	JA8302A	1	
200424	B0412B	JA8301A	1	
200419	B0413A	JA8311B	1	
200419	B0413A	JA8312B	1	
200418	B0413B	JA8312A	1	
200418	B0413B	JA8311A	1	
200417	B0414A	JA8310B	1	
200417	B0414A	JA8311B	1	
200416	B0414B	JA8311A	1	
200416	B0414B	JA8310A	1	
200415	B0415A	JA8309B	1	
200415	B0415A	JA8310B	1	
200414	B0415B	JA8310A	1	
200414	B0415B	JA8309A	1	
200413	B0416A	JA8309B	1	
200413	B0416A	JA8308B	1	
200412	B0416B	JA8308A	1	
200412	B0416B	JA8309A	1	
200411	B0417A	JA8308B	1	
200411	B0417A	JA8307B	1	
200410	B0417B	JA8308A	1	
200410	B0417B	JA8307A	1	
200409	B0421A	JA8306B	1	
200409	B0421A	JA8307B	1	
200408	B0421B	JA8306A	1	

TITLE	WL	DOCUMENT NO.	SHEET NO.	REV.
Logic Wirewrap - Applicable to 60 Pin I/O			13	Y

SIGNAL NAME OR NUMBER IDENTIFICATION	ORIGIN	DESTINATION	Z LEVEL	NOTES
200408	B0421B	JA8307A	1	
200407	B0422A	JA8306B	1	
200407	B0422A	JA8305B	1	
200406	B0422B	JA8305A	1	
200406	B0422B	JA8306A	1	
200405	B0423A	JA8305B	1	
200405	B0423A	JA8304B	1	
200404	B0423B	JA8304A	1	
200404	B0423B	JA8305A	1	
200202	B0424A	B0224A	1	
200202	B0424A	B0631A	2	
200208	B0424B	B0628B	2	
200208	B0424B	B0224B	1	
200216	B0425A	B0225A	1	
200216	B0425A	B0626B	2	
200212	B0425B	B0624A	2	
200212	B0425B	B0225B	1	
200214	B0426A	B0226A	1	
200214	B0426A	B0622B	2	
200210	B0426B	B0226B	1	
200210	B0426B	B0629B	2	
200204	B0427A	B0633A	2	
200204	B0427A	B0227A	1	
200206	B0428A	B0228A	1	
200206	B0428A	B0630A	2	
200220	B0432A	B0232A	1	
200220	B0432A	B0606B	2	
200218	B0432B	B0621A	2	
200218	B0432B	B0232B	1	
200223	B0433B	B0233B	1	
200223	B0433B	B0502A	2	
300027	B0434A	JA8336A	2	
300027	B0434A	JA8236A	1	
200223	B0502A	B1009A	1	
200223	B0502A	B0433B	2	
200519	B0502B	JA8234A	1	
200519	B0502B	B1025B	2	
200403	B0503B	B0404A	1	
200503	B0505A	JA8221A	1	
200503	B0505A	JA8222A	1	
200502	B0505B	JA8221B	1	
200502	B0505B	JA8222B	1	
200914	B0506A	B0932A	2	
201003	B0506B	B1027A	2	
201020	B0507A	B1010A	1	
200402	B0510A	B0404B	1	
200303	B0510B	B0315B	1	
200304	B0511A	B0315A	1	
100415	B0512A	A0430A	2	
100414	B0512B	A0431B	2	
100413	B0513A	A0427A	2	
100412	B0513B	A0428B	2	
100411	B0514A	A0410B	1	

TITLE	WL	DOCUMENT NO.	SHEET NO.	REV.
Logic Wirewrap - Applicable to 60 Pin I/O			14	J

SIGNAL NAME OR NUMBER IDENTIFICATION	ORIGIN	DESTINATION	Z LEVEL	NOTES
100411	B0514A	JA8244B	2	
200523	B0515A	B1030B	1	
200301	B0515B	B0310B	1	
200101	B0516A	B0110B	1	
200515	B0516B	B0723B	1	
200522	B0517A	B1027B	1	
200302	B0517B	B0310A	1	
200102	B0521A	B0110A	1	
201001	B0521B	B1016B	1	
200516	B0522A	B0710B	1	
201002	B0523B	B1002A	1	
200514	B0524A	JA8323B	1	
200514	B0524A	JA8322B	1	
200513	B0524B	JA8323A	1	
200513	B0524B	JA8322A	1	
200508	B0525A	JA8322A	1	
200508	B0525A	JA8321A	1	
200507	B0525B	JA8321B	1	
200507	B0525B	JA8322B	1	
200506	B0526A	JA8328A	1	
200506	B0526A	JA8329A	1	
200505	B0526B	JA8328B	1	
200505	B0526B	JA8329B	1	
200512	B0527A	JA8342A	1	
200512	B0527A	JA8341A	1	
200511	B0527B	JA8341B	1	
200511	B0527B	JA8342B	1	
200510	B0529A	JA8340A	1	
200510	B0529A	JA8341B	1	
200509	B0529B	JA8340B	1	
200509	B0529B	JA8341A	1	
200703	B0530A	B0709B	1	
100403	B0530B	A0407A	1	
100403	B0530B	B0707B	2	
200217	B0531A	B0625A	1	
200217	B0531A	B0403A	2	
200521	B0531B	B1010B	1	
200504	B0532A	B0403B	1	
200504	B0532A	A0221B	2	
101006	B0532B	JA8234B	2	
101006	B0532B	B1008B	2	
101006	B0532B	A1013A	1	
200501	B0533A	B0203B	1	
200501	B0533A	JA8233B	2	
200520	B0533B	B0708B	1	
300028	B0534A	JA8337B	2	
300028	B0534A	JA8237B	1	
200610	B0602A	A0711B	1	
200611	B0602B	A0725B	1	
200612	B0603A	A0712B	1	
200908	B0603B	B0914A	1	
200613	B0604A	A0713A	1	

TITLE				WL	DOCUMENT NO.	SHEET NO.	REV.
Logic Wirewrap - Applicable to 60 Pin I/O						15	J

SIGNAL NAME OR NUMBER IDENTIFICATION	ORIGIN	DESTINATION	Z LEVEL	NOTES
200608	B0604B	A0727A	1	
200920	B0605A	B0910B	1	
200912	B0605B	B0903A	1	
200912	B0605B	B0324A	2	
200614	B0606A	B0917B	1	
200220	B0606B	B0432A	2	
200606	B0607A	B0827B	1	
200615	B0607B	B0922B	1	
200618	B0609A	A0717A	1	
200617	B0609B	A0715A	1	
200616	B0610A	A0713B	1	
200619	B0611B	A0716A	1	
200601	B0613A	JA8110A	1	
200604	B0613B	B0904A	1	
200607	B0614A	B0914B	1	
200622	B0614B	B0307A	1	
100404	B0615A	B0933B	1	
200620	B0616A	JA8101B	1	
200201	B0616B	B0712B	2	
200201	B0616B	B0227B	1	
200609	B0617B	A0926B	1	
200218	B0621A	B0432B	2	
200218	B0621A	B0832A	1	
200214	B0622B	B0826B	1	
200214	B0622B	B0426A	2	
200602	B0623B	JA8111A	1	
200212	B0624A	B0826A	1	
200212	B0624A	B0425B	2	
200603	B0624B	JA8112A	1	
200217	B0625A	B0833B	2	
200217	B0625A	B0531A	1	
200916	B0625B	B0915B	1	
200924	B0626A	B0117A	1	
200924	B0626A	B0817A	2	
200216	B0626B	B0811B	1	
200216	B0626B	B0425A	2	
200208	B0628B	B0823B	1	
200208	B0628B	B0424B	2	
200210	B0629B	B0426B	2	
200210	B0629B	B0822A	1	
200206	B0630A	B0823A	1	
200206	B0630A	B0428A	2	
200202	B0631A	B0424A	2	
200202	B0631A	B0832B	1	
200912	B0632A	B0124A	2	
200605	B0632B	B0910A	1	
200204	B0633A	B0427A	2	
200204	B0633A	B0825A	1	
200621	B0633B	A0217A	1	
300029	B0634A	JA8339A	2	
300029	B0634A	JA8239A	1	
300010	B0701B	JA8232A	1	

TITLE	WL	DOCUMENT NO.	SHEET NO.	REV.
Logic Wirewrap - Applicable to 60 Pin I/O			16	J/AS

SIGNAL NAME OR NUMBER IDENTIFICATION	ORIGIN	DESTINATION	Z LEVEL	NOTES
100403	B0707B	B0530B	2	
100403	B0707B	A0528B	1	
200520	B0708B	B0533B	1	
100107	B0709A	A0130B	1	
200703	B0709B	B0530A	1	
200516	B0710B	B0522A	1	
200201	B0712B	B0616B	2	
200515	B0723B	B0516B	1	
200211	B0726B	B0103A	2	
200701	B0729A	JA8108B	1	
200702	B0729B	JA8109B	1	
200401	B0732B	B0402B	1	
300030	B0734A	JA8340B	2	
300030	B0734A	JA8240B	1	
300009	B0734B	JA8233A	1	
200812	B0801A	B0811A	1	
	B0802A	A1014B	1	Used on BK5C1E/F only
100307	B0804A	A0311B	1	
	B0802B	B0912A	1	Used on BK5C1E/F only
200921	B0804B	B0921B	1	
200921	B0804B	A1017B	2	
200813	B0805A	B0814A	1	Not used on BK5C1E/F only
100306	B0805B	A0332A	1	
200807	B0806A	B0911B	1	
200808	B0806B	B0924A	1	
200805	B0807A	B0932B	1	
200810	B0807B	B0925B	1	
100802	B0810A	A0809B	1	
200804	B0810B	A0814B	1	
200812	B0811A	B0801A	1	
200216	B0811B	B0626B	1	
200926	B0812A	A0327B	2	
200926	B0812A	B0913B	1	
200213	B0812B	B0230B	1	
200213	B0812B	B0927A	2	
200814	B0813A	B0815B	2	Not used on BK5C1E/F only
200802	B0813B	B0304A	1	
200813	B0814A	B0814B	2	Not used on BK5C1E/F only
200813	B0814A	B0805A	1	Not used on BK5C1E/F only
200813	B0814B	B0825B	1	Not used on BK5C1E/F only
200813	B0814B	B0814A	2	Not used on BK5C1E/F only
100104	B0815A	A0126B	1	
200814	B0815B	B0813A	2	Not used on BK5C1E/F only
200814	B0815B	B0824B	1	Not used on BK5C1E/F only
100801	B0816A	A0808A	1	
200806	B0816B	B0902A	1	
200924	B0817A	B0626A	2	
200924	B0817A	B0906B	1	
200919	B0817B	B0907B	1	
200919	B0817B	A0425B	2	
200809	B0821A	B0917A	1	
200801	B0821B	B0304B	1	
200210	B0822A	B0629B	1	
100305	B0822B	A0333A	2	

TITLE	WL	DOCUMENT NO.	SHEET NO.	REV.
Logic Wirewrap - Applicable to 60 Pin I/O			17	J/AS

SIGNAL NAME OR NUMBER IDENTIFICATION	ORIGIN	DESTINATION	Z LEVEL	NOTES
200206	B0823A	B0630A	1	
200208	B0823B	B0628B	1	
200814	B0824A	B0824B	2	Not used on BK5C1E/F only
200814	B0824A	B0834A	1	Not used on BK5C1E/F only
200814	B0824B	B0824A	2	Not used on BK5C1E/F only
200814	B0824B	B0815B	1	Not used on BK5C1E/F only
200204	B0825A	B0633A	1	
200813	B0825B	B0829A	2	Not used on BK5C1E/F only
200813	B0825B	B0814B	1	Not used on BK5C1E/F only
200212	B0826A	B0624A	1	
200214	B0826B	B0622B	1	
200803	B0827A	B0933A	1	
200606	B0827B	B0607A	1	
200606	B0827B	B0902B	2	
100805	B0828B	A0823A	1	
200813	B0829A	B0825B	2	Not used on BK5C1E/F only
200813	B0829A	B0829B	1	Not used on BK5C1E/F only
200813	B0829B	B0830A	2	Not used on BK5C1E/F only
200813	B0829B	B0829A	1	Not used on BK5C1E/F only
200813	B0830A	B0829B	2	Not used on BK5C1E/F only
100105	B0831A	A0113B	1	
200218	B0832A	B0621A	1	
200202	B0832B	B0631A	1	
200811	B0833A	B0929A	1	
200217	B0833B	B1003A	1	
200217	B0833B	B0625A	2	
200814	B0834A	JA8243A	2	
200814	B0834A	B0824A	1	
200806	B0902A	B0816B	1	
200606	B0902B	B0905B	1	
200606	B0902B	B0827B	2	
200912	B0903A	A0832A	2	
200912	B0903A	B0605B	1	
200904	B0903B	A0410A	1	
200604	B0904A	B0613B	1	
200903	B0904B	A0816A	1	
100807	B0905A	A0812B	1	
200606	B0905B	B0902B	1	
200906	B0906A	A0823B	1	
200924	B0906B	A0810B	2	
200924	B0906B	B0817A	1	
200902	B0907A	A0923B	1	
200919	B0907B	B0817B	1	
200901	B0908A	A0922B	1	
200907	B0909A	B0916A	2	
200605	B0910A	B0632B	1	
200920	B0910B	B0605A	1	
200915	B0911A	B0307B	1	
200807	B0911B	B0806A	1	
	B0912A	B0802B	1	Used on BK5C1E/F only
101004	B0912A	A1014B	1	Not used on BK5C1E/F only
200923	B0912B	A0708A	1	
200911	B0913A	A0710A	1	

TITLE	WL	DOCUMENT NO.	SHEET NO.	REV.
Logic Wirewrap - Applicable to 60 Pin I/O			18	Y

SIGNAL NAME OR NUMBER IDENTIFICATION	ORIGIN	DESTINATION	Z LEVEL	NOTES
200926	B0913B	A0925B	2	
200926	B0913B	B0812A	1	
200908	B0914A	B0603B	1	
200908	B0914A	A0812A	2	
200607	B0914B	B0614A	1	
100901	B0915A	A0924B	2	
200916	B0915B	B0625B	1	
200907	B0916A	B0909A	2	
200907	B0916A	A0717B	1	
200905	B0916B	A0722B	1	
200809	B0917A	B0821A	1	
200614	B0917B	B0606A	1	
200921	B0921B	A0916B	2	
200921	B0921B	B0804B	1	
200910	B0922A	A0813A	1	
200615	B0922B	B0607B	1	
200917	B0923A	B0934A	1	
101003	B0923B	A1017A	1	
200808	B0924A	B0806B	1	
200927	B0924B	JA8004A	1	
200922	B0925A	A0915B	1	
200810	B0925B	B0807B	1	
200925	B0926A	A0825B	1	
101001	B0926B	A1022A	1	
200213	B0927A	B0812B	2	
100302	B0927B	A0308B	1	
100301	B0928B	A0307B	1	
200811	B0929A	B0833A	1	
200922	B0929B	A0707B	1	
200913	B0930A	A0813B	1	
200909	B0930B	A0927B	1	
200918	B0931A	A0702A	1	
100402	B0931B	A0414A	1	
200914	B0932A	B1009B	1	
200914	B0932A	B0506A	2	
200805	B0932B	B0807A	1	
200803	B0933A	B0827A	1	
100404	B0933B	A0707A	2	
100404	B0933B	B0615A	1	
200917	B0934A	JA8343A	2	
200917	B0934A	B0923A	1	
201002	B1002A	B0523B	1	
200217	B1003A	B0833B	1	
201005	B1007A	JA8222B	1	
201006	B1007B	JA8222A	1	
201004	B1008A	A0811B	1	
101006	B1008B	B0532B	2	
200223	B1009A	B0502A	1	
200914	B1009B	B0932A	1	
201020	B1010A	B0507A	1	
200521	B1010B	B0531B	1	
100411	B1015B	A0410B	2	
100403	B1016A	A1015B	1	

TITLE	WL	DOCUMENT NO.	SHEET NO.	REV.
Logic Wirewrap - Applicable to 60 Pin I/O			19	J

SIGNAL NAME OR NUMBER IDENTIFICATION	ORIGIN	DESTINATION	Z LEVEL	NOTES
201001	B1016B	B0521B	1	
200243	B1022A	B0210A	2	
200242	B1022B	B0210B	2	
200421	B1023A	B0410A	2	
200420	B1023B	B0410B	2	
200519	B1025B	B0502B	2	
200501	B1026A	A0217B	2	
201003	B1027A	B0506B	2	
201003	B1027A	JA8244A	1	
200522	B1027B	B0517A	1	
201008	B1028A	JA8242A	1	
201007	B1028B	JA8242B	1	
201010	B1029A	JA8241B	1	
201009	B1029B	JA8241A	1	
200504	B1030A	B0321B	1	
200523	B1030B	B0515A	1	
201012	B1031A	JA8228A	1	
201011	B1031B	JA8228B	1	
300031	B1034A	JA8244B	1	
300011	B1034A	JA8245B	1	
300031	B1034A	JA8344B	2	
100404	JA8001A	A1012A	1	
100404	JA8001A	A0411B	2	
100410	JA8002B	A0409A	1	
101020	JA8003A	A0133B	1	
101017	JA8003B	A1028B	1	
200927	JA8004A	A1030B	2	
200927	JA8004A	B0924B	1	
101016	JA8004B	A1029B	1	
100408	JA8005A	A1026B	1	
101013	JA8005B	A1028A	1	
101015	JA8006A	A1026A	1	
101014	JA8006B	A1029A	1	
100416	JA8007A	A0101A	1	
100416	JA8007B	A0101A	?	
300016	JA8008A	JA8102B	1	
300017	JA8008B	JA8112B	1	
100409	JA8009B	A1012B	1	
101018	JA8010A	A1027A	1	
101019	JA8010B	A1034A	1	
100412	JA8011A	A0428B	1	
100414	JA8011B	A0431B	1	
100413	JA8012A	A0427A	1	
100405	JA8013A	A0412B	1	
100415	JA8014A	A0430A	1	
100417	JA8014B	A0134B	1	
300013	JA8101A	A0601A	1	
200620	JA8101B	B0616A	1	
200105	JA8102A	B0132A	1	
300016	JA8102B	JA8008A	1	
200106	JA8103A	B0133B	1	
300019	JA8103B	A0601B	1	

TITLE	WL	DOCUMENT NO.	SHEET NO.	REV.
Logic Wirewrap - Applicable to 60 Pin I/O			20	J

SIGNAL NAME OR NUMBER IDENTIFICATION	ORIGIN	DESTINATION	Z LEVEL	NOTES
200107	JA8104A	B01328	1	
100803	JA8104B	A0825A	1	
300006	JA8105A	A1001A	1	
300004	JA8105B	A0521B	1	
300005	JA8106A	A0522B	1	
300002	JA8106B	A0508B	1	
300015	JA8107A	A0801A	1	
300003	JA8107B	A0507B	1	
300001	JA8108A	A0414B	1	
200701	JA8108B	B0729A	1	
300007	JA8109A	A0409B	1	
200702	JA8109B	B0729B	1	
200601	JA8110A	B0613A	1	
200201	JA8110B	A0413A	1	
200602	JA8111A	B0623B	1	
300020	JA8111B	A0634B	1	
200603	JA8112A	B0624B	1	
300017	JA8112B	JA8008B	1	
101005	JA8113A	A1002A	1	
300021	JA8113B	A0633B	1	
300014	JA8114A	A0701A	1	
300018	JA8114B	A1032B	1	
300018	JA8114B	A0932B	2	
101008	JA8201A	A1003B	1	
200246	JA8201A	B0212B	1	
200247	JA8201B	B0212A	1	
300012	JA8201B	B0134A	2	
200246	JA8202A	B0212B	1	
200248	JA8202A	B0211B	1	
200249	JA8202B	B0211A	1	
200247	JA8202B	B0212A	1	
200248	JA8203A	B0211B	1	
200252	JA8203A	B0207B	1	
200249	JA8203B	B0211A	1	
200253	JA8203B	B0207A	1	
200252	JA8204A	B0207B	1	
200226	JA8204A	B0223B	1	
200227	JA8204B	B0223A	1	
200253	JA8204B	B0207A	1	
200226	JA8205A	B0223B	1	
200228	JA8205A	B0222B	1	
200229	JA8205B	B0222A	1	
200227	JA8205B	B0223A	1	
200230	JA8206A	B0221B	1	
200228	JA8206A	B0222B	1	
200231	JA8206B	B0221A	1	
200229	JA8206B	B0222A	1	
200232	JA8207A	B0217B	1	
200230	JA8207A	B0221B	1	
200231	JA8207B	B0221A	1	
200233	JA8207B	B0217A	1	
200234	JA8208A	B0216B	1	

TITLE		DOCUMENT NO.	SHEET NO.	REV.
Logic Wirewrap - Applicable to 60 Pin I/O	WL		21	J

SIGNAL NAME OR NUMBER IDENTIFICATION	ORIGIN	DESTINATION	Z LEVEL	NOTES
200232	JA8208A	B0217B	1	
200235	JA8208B	B0216A	1	
200233	JA8208B	B0217A	1	
200234	JA8209A	B0216B	1	
200236	JA8209A	B0215B	1	
200235	JA8209B	B0216A	1	
200237	JA8209B	B0215A	1	
200238	JA8210A	B0214B	1	
200236	JA8210A	B0215B	1	
200237	JA8210B	B0215A	1	
200239	JA8210B	B0214A	1	
200240	JA8211A	B0213B	1	
200238	JA8211A	B0214B	1	
200239	JA8211B	B0214A	1	
200241	JA8211B	B0213A	1	
200240	JA8212A	B0213B	1	
200244	JA8212A	B0209B	1	
200241	JA8212B	B0213A	1	
200245	JA8212B	B0209A	1	
200242	JA8213A	B0210B	1	
200244	JA8213A	B0209B	1	
200245	JA8213B	B0209A	1	
200243	JA8213B	B0210A	1	
200242	JA8214A	B0210B	1	
200250	JA8214A	B0208B	1	
200243	JA8214B	B0210A	1	
200251	JA8214B	B0208A	1	
200250	JA8215A	B0208B	1	
200116	JA8215A	B0109A	1	
200251	JA8215B	B0208A	1	
200115	JA8215B	B0109B	1	
200116	JA8216A	B0109A	1	
200118	JA8216A	B0108A	1	
200115	JA8216B	B0109B	1	
200117	JA8216B	B0108B	1	
200118	JA8217A	B0108A	1	
200120	JA8217A	B0126A	1	
200117	JA8217B	B0108B	1	
200119	JA8217B	B0126B	1	
200112	JA8218A	B0106A	1	
200120	JA8218A	B0126A	1	
200111	JA8218B	B0106B	1	
200119	JA8218B	B0126B	1	
200122	JA8219A	B0125A	1	
200112	JA8219A	B0106A	1	
200111	JA8219B	B0106B	1	
200121	JA8219B	B0125B	1	
200122	JA8220A	B0125A	1	
200124	JA8220A	B0127A	1	
200121	JA8220B	B0125B	1	
200123	JA8220B	B0127B	1	
200124	JA8221A	B0127A	1	

TITLE	WL	DOCUMENT NO.	SHEET NO.	REV.
Logic Wirewrap - Applicable to 60 Pin I/O			22	J/AS

SIGNAL NAME OR NUMBER IDENTIFICATION	ORIGIN	DESTINATION	Z LEVEL	NOTES
200503	JA8221A	B0505A	1	
200123	JA8221B	B0127B	1	
200502	JA8221B	B0505B	1	
201006	JA8222A	B1007B	1	
200503	JA8222A	B0505A	1	
201005	JA8222B	B1007A	1	
200502	JA8222B	B0505B	1	
200256	JA8223A	B0205B	1	
200257	JA8223B	B0205A	1	
200256	JA8224A	B0205B	1	
200254	JA8224A	B0206B	1	
200255	JA8224B	B0206A	1	
200257	JA8224B	B0205A	1	
200254	JA8225A	B0206B	1	
200114	JA8225A	B0105A	1	
200113	JA8225B	B0105B	1	
200255	JA8225B	B0206A	1	
200114	JA8226A	B0105A	1	
200135	JA8226A	B0113B	1	
200136	JA8226B	B0113A	1	
200113	JA8226B	B0105B	1	
200135	JA8227A	B0113B	1	
200137	JA8227A	B0114B	1	
200136	JA8227B	B0113A	1	
200138	JA8227B	B0114A	1	
200137	JA8228A	B0114B	1	
201012	JA8228A	B1031A	1	
200138	JA8228B	B0114A	1	
201011	JA8228B	B1031B	1	
101008	JA8229A	A1003B	1	
101009	JA8229B	A1003A	1	
101007	JA8230A	A1004B	1	
101009	JA8230B	A1003A	1	
	JA8230A	A1009A	1	Used on BK5C1E/F only
	JA8230B	A1009B	1	Used on BK5C1E/F only
101007	JA8231A	A1004B	1	
300010	JA8232A	B07018	1	
300008	JA8232B	A0433A	1	
300009	JA8233A	B0734B	1	
300025	JA8233A	B0234A	1	
200125	JA8233B	B0128B	1	
200501	JA8233B	B0533A	2	
200126	JA8234A	B0128A	1	
200519	JA8234A	B0502B	1	
101006	JA8234B	B0532B	2	
300026	JA8234B	B0334A	1	
200128	JA8235A	B0130A	1	
200125	JA8235A	B0128B	1	
200127	JA8235B	B0130B	1	
200126	JA8235B	B0128A	1	
200128	JA8236A	B0130A	1	
300027	JA8236A	B0434A	1	
200129	JA8236B	B0129B	1	
200127	JA8236B	B0130B	1	

TITLE	WL	DOCUMENT NO.	SHEET NO.	REV.
Logic Wirewrap - Applicable to 60 Pin I/O			23	J

SIGNAL NAME OR NUMBER IDENTIFICATION	ORIGIN	DESTINATION	Z LEVEL	NOTES
200130	JA8237A	B0129A	1	
200129	JA8237A	B0129B	1	
200130	JA8237B	B0129A	1	
300028	JA8237B	B0534A	1	
200133	JA8238A	B0112B	1	
200134	JA8238B	B0112A	1	
200132	JA8239A	B0111A	1	
300029	JA8239A	B0634A	1	
200131	JA8239B	B0111B	1	
200132	JA8239B	B0111A	1	
200131	JA8240A	B0111B	1	
300030	JA8240B	B0734A	1	
201009	JA8241A	B1029B	1	
201010	JA8241B	B1029A	1	
201008	JA8242A	B1028A	1	
201007	JA8242B	B1028B	1	
200814	JA8243A	B0834A	2	
201003	JA8244A	B1027A	1	
100411	JA8244B	B0514A	2	
300031	JA8244B	B1034A	1	
300011	JA8245B	B1034A	1	
101008	JA8301A	A1003B	2	
200424	JA8301A	B0412B	1	
200425	JA8301B	B0412A	1	
200424	JA8302A	B0412B	1	
200426	JA8302A	B0411B	1	
200425	JA8302B	B0412A	1	
200427	JA8302B	B0411A	1	
200426	JA8303A	B0411B	1	
200430	JA8303A	B0407B	1	
200427	JA8303B	B0411A	1	
200431	JA8303B	B0407A	1	
200430	JA8304A	B0407B	1	
200404	JA8304A	B0423B	1	
200405	JA8304B	B0423A	1	
200431	JA8304B	B0407A	1	
200404	JA8305A	B0423B	1	
200406	JA8305A	B0422B	1	
200405	JA8305B	B0423A	1	
200407	JA8305B	B0422A	1	
200408	JA8306A	B0421B	1	
200406	JA8306A	B0422B	1	
200407	JA8306B	B0422A	1	
200409	JA8306B	B0421A	1	
200408	JA8307A	B0421B	1	
200410	JA8307A	B0417B	1	
200409	JA8307B	B0421A	1	
200411	JA8307B	B0417A	1	
200412	JA8308A	B0416B	1	
200410	JA8308A	B0417B	1	
200411	JA8308B	B0417A	1	
200413	JA8308B	B0416A	1	

TITLE	WL	DOCUMENT NO.	SHEET NO.	REV.
Logic Wirewrap - Applicable to 60 Pin I/O			24	J

SIGNAL NAME OR NUMBER IDENTIFICATION	ORIGIN	DESTI-NATION	Z LEVEL	NOTES
200414	JA8309A	B0415B	1	
200412	JA8309A	B0416B	1	
200415	JA8309B	B0415A	1	
200413	JA8309B	B0416A	1	
200416	JA8310A	B0414B	1	
200414	JA8310A	B0415B	1	
200415	JA8310B	B0415A	1	
200417	JA8310B	B0414A	1	
200416	JA8311A	B0414B	1	
200418	JA8311A	B0413B	1	
200419	JA8311B	B0413A	1	
200417	JA8311B	B0414A	1	
200422	JA8312A	B0409B	1	
200418	JA8312A	B0413B	1	
200423	JA8312B	B0409A	1	
200419	JA8312B	B0413A	1	
200422	JA8313A	B0409B	1	
200420	JA8313A	B0410B	1	
200423	JA8313B	B0409A	1	
200421	JA8313B	B0410A	1	
200420	JA8314A	B0410B	1	
200428	JA8314A	B0408B	1	
200429	JA8314B	B0408A	1	
200421	JA8314B	B0410A	1	
200428	JA8315A	B0408B	1	
200310	JA8315A	B0309A	1	
200429	JA8315B	B0408A	1	
200309	JA8315B	B0309B	1	
200310	JA8316A	B0309A	1	
200312	JA8316A	B0308A	1	
200309	JA8316B	B0309B	1	
200311	JA8316B	B0308B	1	
200312	JA8317A	B0308A	1	
200314	JA8317A	B0326A	1	
200313	JA8317B	B0326B	1	
200311	JA8317B	B0308B	1	
200306	JA8318A	B0306A	1	
200314	JA8318A	B0326A	1	
200313	JA8318B	B0326B	1	
200305	JA8318B	B0306B	1	
200316	JA8319A	B0325A	1	
200306	JA8319A	B0306A	1	
200305	JA8319B	B0306B	1	
200315	JA8319B	B0325B	1	
200318	JA8320A	B0327A	1	
200316	JA8320A	B0325A	1	
200315	JA8320B	B0325B	1	
200317	JA8320B	B0327B	1	
200508	JA8321A	B0525A	1	
200318	JA8321A	B0327A	1	
200317	JA8321B	B0327B	1	
200507	JA8321B	B0525B	1	

TITLE	WL	DOCUMENT NO.	SHEET NO.	REV.
Logic Wirewrap - Applicable to 60 Pin I/O			25	J

SIGNAL NAME OR NUMBER IDENTIFICATION	ORIGIN	DESTINATION	Z LEVEL	NOTES
200508	JA8322A	B0525A	1	
200513	JA8322A	B0524B	1	
200507	JA8322B	B0525B	1	
200514	JA8322B	B0524A	1	
200434	JA8323A	B0405B	1	
200513	JA8323A	B0524B	1	
200435	JA8323B	B0405A	1	
200514	JA8323B	B0524A	1	
200432	JA8324A	B0406B	1	
200434	JA8324A	B0405B	1	
200433	JA8324B	B0406A	1	
200435	JA8324B	B0405A	1	
200432	JA8325A	B0406B	1	
200308	JA8325A	B0305A	1	
200433	JA8325B	B0406A	1	
200307	JA8325B	B0305B	1	
200329	JA8326A	B0313B	1	
200308	JA8326A	B0305A	1	
200330	JA8326B	B0313A	1	
200307	JA8326B	B0305B	1	
200329	JA8327A	B0313B	1	
200331	JA8327A	B0314B	1	
200330	JA8327B	B0313A	1	
200332	JA8327B	B0314A	1	
200331	JA8328A	B0314B	1	
200506	JA8328A	B0526A	1	
200332	JA8328B	B0314A	1	
200505	JA8328B	B0526B	1	
200506	JA8329A	B0526A	1	
101008	JA8329A	A1003B	?	
200505	JA8329B	B0526B	1	
101009	JA8329B	A1003A	?	
101007	JA8330A	A1004B	?	
101009	JA8330B	A1003A	?	
101007	JA8331A	A1004B	?	
300025	JA8333A	B0234A	?	
200319	JA8333B	B0328B	1	
200320	JA8334A	B0328A	1	
300026	JA8334B	B0334A	?	
200322	JA8335A	B0330A	1	
200319	JA8335A	B0328B	1	
200321	JA8335B	B0330B	1	
200320	JA8335B	B0328A	1	
200322	JA8336A	B0330A	1	
300027	JA8336A	B0434A	?	
200323	JA8336B	B0329B	1	
200321	JA8336B	B0330B	1	
200323	JA8337A	B0329B	1	
200324	JA8337A	B0329A	1	
200324	JA8337B	B0329A	1	
300028	JA8337B	B0534A	?	
200327	JA8338A	B0312B	1	

TITLE	WL	DOCUMENT NO.	SHEET NO.	REV.
Logic Wirewrap - Applicable to 60 Pin I/O			26	J

SIGNAL NAME OR NUMBER IDENTIFICATION	ORIGIN	DESTI-NATION	Z LEVEL	NOTES
200328	JA8338B	B0312A	1	
200326	JA8339A	B0311A	1	
300029	JA8339A	B0634A	2	
200325	JA8339B	B0311B	1	
200326	JA8339B	B0311A	1	
200510	JA8340A	B0529A	1	
200325	JA8340A	B0311B	1	
200509	JA8340B	B0529B	1	
300030	JA8340B	B0734A	2	
200509	JA8341A	B0529B	1	
200512	JA8341A	B0527A	1	
200511	JA8341B	B0527B	1	
200510	JA8341B	B0529A	1	
200512	JA8342A	B0527A	1	
200511	JA8342B	B0527B	1	
200917	JA8343A	B0934A	2	
300031	JA8344B	B1034A	2	

50 PIN I/O

TITLE		DOCUMENT NO.	SHEET NO.	REV.
Logic Wirewrap - Applicable to 50 Pin I/O	WL	77568124	1 OF 20	Y

SIGNAL NAME OR NUMBER IDENTIFICATION	ORIGIN	DESTINATION	Z LEVEL	NOTES
100416	A0101A	JA8007B	2	
100416	A0101A	JA8007A	1	
300023	A0101B	A0121B	1	
100305	A0104B	A0333A	1	
100101	A0112B	A0221A	1	
100101	A0112B	A0127B	2	
100105	A0113B	B0831A	1	
300022	A0114B	A0234B	1	
300023	A0121B	A0101B	1	
100304	A0122B	A0312B	1	
100103	A0123B	A0623B	1	
100102	A0124B	A0624B	1	
100104	A0126B	B0815A	1	
100101	A0127B	A0112B	2	
100108	A0128B	B0123B	2	
100107	A0130B	B0709A	1	
101020	A0133B	JA8003A	1	
100417	A0134B	JA8014B	1	
100309	A0213B	A0323B	1	
100409	A0214B	A1012B	2	
100308	A0215B	A0325B	1	
200802	A0216A	B0104A	1	
300024	A0216B	A0231A	2	
200621	A0217A	B0633B	1	
200501	A0217B	B0121B	1	
200501	A0217B	B1026A	2	
100101	A0221A	A0112B	1	
200504	A0221B	B0532A	2	
100504	A0222A	A0532B	1	
100504	A0222A	B0123A	2	
300024	A0222B	A0234A	2	
200221	A0223A	B0117B	1	
200217	A0223B	B0203A	2	
200208	A0224A	B0224B	2	
200218	A0224B	B0232B	2	
200206	A0225A	B0122B	1	
200204	A0225B	B0116A	1	
200216	A0226A	B0225A	2	
200202	A0226B	B0121A	1	
200202	A0226B	B0116B	2	
200214	A0227A	B0226A	2	
200210	A0228A	B0226B	2	
200212	A0229A	B0225B	2	
200223	A0230A	B0233B	2	
300024	A0231A	A0216B	2	
300024	A0231A	A0234A	1	
200220	A0232A	B0232A	2	
300024	A0234A	A0231A	1	
300024	A0234A	A0222B	2	
300022	A0234B	A0114B	1	
100301	A0307B	B0928B	1	

TITLE: Logic Wirewrap - Applicable to 50 Pin I/O	WL	DOCUMENT NO.	SHEET NO. 2	REV. M

SIGNAL NAME OR NUMBER IDENTIFICATION	ORIGIN	DESTINATION	Z LEVEL	NOTES
100302	A0308B	B0927B	1	
100303	A0309B	A0826B	1	
100307	A0311B	B0804A	1	
100304	A0312B	A0122B	1	
100309	A0323B	A0213B	1	
100308	A0325B	A0215B	1	
200926	A0327B	B0812A	2	
100306	A0332A	B0805B	1	
100305	A0333A	A0104B	1	
100305	A0333A	B0822B	2	
100418	A0403B	A0903B	1	
100403	A0407A	A1015B	2	
100403	A0407A	B0530B	1	
200108	A0408A	B0102B	1	
100410	A0409A	JA8002B	1	
300007	A0409B	JA8109A	1	
200904	A0410A	B0903B	1	
100411	A0410B	B0514A	1	
100411	A0410B	B1015B	2	
100404	A0411B	JA8001A	2	
100404	A0411B	A0707A	1	
200209	A0412A	B0230A	1	
100405	A0412B	A1027B	2	
100405	A0412B	JA8013A	1	
200201	A0413A	B0227B	2	
200201	A0413A	JA8110B	1	
200203	A0413B	B0229A	1	
200203	A0413B	A0531B	2	
100402	A0414A	B0931B	1	
300001	A0414B	JA8108A	1	
100407	A0415B	A1023B	1	
101010	A0416B	A1021A	1	
101002	A0424B	A1021B	1	
200919	A0425B	B0817B	2	
100505	A0426A	A0525B	1	
100406	A0426B	B0324B	1	
100413	A0427A	JA8012A	1	
100413	A0427A	B0513A	2	
100412	A0428B	JA8011A	1	
100412	A0428B	B0513B	2	
200225	A0429A	B0204A	1	
200224	A0429B	B0204B	1	
100415	A0430A	B0512A	2	
100415	A0430A	JA8014A	1	
100804	A0430B	A0811A	1	
200104	A0431A	B0115A	1	
100414	A0431B	B0512B	2	
100414	A0431B	JA8011B	1	
200103	A0432A	B0115B	1	
100417	A0432B	A0932B	1	
201004	A0433A	A0523B	1	
100502	A0503B	A0610B	1	

TITLE	WL	DOCUMENT NO.	SHEET NO.	REV.
Logic Wirewrap - Applicable to 50 Pin I/O			3	M

SIGNAL NAME OR NUMBER IDENTIFICATION	ORIGIN	DESTINATION	Z LEVEL	NOTES
100501	A0504B	A0609B	1	
300003	A0507B	JA8107B	1	
300002	A0508B	JA8106B	1	
300004	A0521B	JA8105B	1	
300005	A0522B	JA8106A	1	
201004	A0523B	A0433A	1	
201004	A0523B	A0811B	2	
200222	A0524B	B0202B	1	
100505	A0525B	A0426A	1	
200211	A0527B	A0824A	2	
100403	A0528B	B0707B	1	
100503	A0530B	A0622B	1	
200203	A0531B	A0612B	1	
200203	A0531B	A0413B	2	
100504	A0532B	A0222A	1	
300013	A0601A	JA8101A	1	
300019	A0601B	JA8103B	1	
200219	A0603B	B0233A	1	
200215	A0604B	B0231B	1	
100501	A0609B	A0504B	1	
100502	A0610B	A0503B	1	
200203	A0612B	A0531B	1	
200203	A0612B	A0824B	2	
200211	A0613B	B0231A	?	
200211	A0613B	A0824A	1	
100503	A0622B	A0530B	1	
100103	A0623B	A0123B	1	
100102	A0624B	A0124B	1	
100601	A0626B	B0331B	1	
100602	A0627B	B0331A	1	
300021	A0633B	JA8113B	1	
300020	A0634B	JA8111B	1	
300014	A0701A	JA8114A	1	
200918	A0702A	B0931A	1	
100404	A0707A	A0411B	1	
100404	A0707A	B0933B	?	
200922	A0707B	B0929B	1	
200923	A0708A	B0912B	1	
200911	A0710A	B0913A	1	
200610	A0711B	B0602A	1	
200612	A0712B	B0603A	1	
200613	A0713A	B0604A	1	
200616	A0713B	B0610A	1	
200617	A0715A	B0609B	1	
100809	A0715B	A0826A	?	
200619	A0716A	B0611B	1	
200902	A0716B	A0923B	2	
200618	A0717A	B0609A	1	
200907	A0717B	B0916A	1	
200901	A0721B	A0922B	?	
200905	A0722B	B0916B	1	
100808	A0723B	A0809A	1	

TITLE	WL	DOCUMENT NO.	SHEET NO.	REV.
Logic Wirewrap - Applicable to 50 Pin I/O			4	M

SIGNAL NAME OR NUMBER IDENTIFICATION	ORIGIN	DESTI-NATION	Z LEVEL	NOTES
200611	A0725B	B0602B	1	
100701	A0726B	A0928B	1	
200608	A0727A	B0604B	1	
100703	A0727B	A0808B	1	
100902	A0728B	A0912B	1	
100702	A0730B	A0802A	1	
300015	A0801A	JA8107A	1	
100702	A0802A	A0730B	1	
100801	A0808A	B0816A	1	
100703	A0808B	A0727B	1	
100808	A0809A	A0723B	1	
100802	A0809B	B0810A	1	
200924	A0810B	B0906B	?	
100804	A0811A	A0430B	1	
201004	A0811B	H1008A	1	
201004	A0811B	A0523B	?	
200908	A0812A	B0914A	?	
100807	A0812B	B0905A	1	
200910	A0813A	B0922A	1	
200913	A0813B	B0930A	1	
200804	A0814B	B0810B	1	
200903	A0816A	B0904B	1	
200207	A0821A	B0229B	1	
100806	A0822A	A0927A	1	
200205	A0822B	B0228B	1	
100805	A0823A	B0828B	1	
200906	A0823B	B0906A	1	
200211	A0824A	A0527B	?	
200211	A0824A	A0613B	1	
200203	A0824B	A0612B	?	
100803	A0825A	JA8104B	1	
200925	A0825B	B0926A	1	
100809	A0826A	A0715B	?	
100809	A0826A	A0906A	1	
100303	A0826B	A0309B	1	
200912	A0832A	B0903A	?	
100901	A0833A	A0924B	1	
101011	A0902A	A1002B	?	
101011	A0902B	A1002B	1	
100418	A0903A	A0903B	?	
100418	A0903A	A0904A	1	
100418	A0903B	A0403B	1	
100418	A0903B	A0903A	?	
100418	A0904A	A0903A	1	
100418	A0904A	A0904B	2	
100418	A0904B	A0904A	?	
100809	A0906A	A0826A	1	
100902	A0912B	A0728B	1	
200922	A0915B	B0925A	1	
200921	A0916B	B0921B	?	
200901	A0922B	A0721B	?	
200901	A0922B	B0908A	1	

TITLE	WL	DOCUMENT NO.	SHEET NO.	REV.
Logic Wirewrap - Applicable to 50 Pin I/O			5	M

SIGNAL NAME OR NUMBER IDENTIFICATION	ORIGIN	DESTINATION	Z LEVEL	NOTES
200902	A0923B	B0907A	1	
200902	A0923B	A0716B	2	
100901	A0924B	B0915A	2	
100901	A0924B	A0833A	1	
200926	A0925B	B0913B	2	
200609	A0926B	B0617B	1	
100806	A0927A	A0822A	1	
200909	A0927B	B0930B	1	
100701	A0928B	A0726B	1	
300018	A0931A	A0932A	1	
300018	A0931A	A0931B	2	
300018	A0931B	A0931A	2	
300018	A0932A	A1032B	2	
300018	A0932A	A0931A	1	
100417	A0932B	A0432B	1	
300018	A0932B	JA8114B	2	
101012	A0933A	A1033B	2	
101012	A0933B	A1033B	1	
300006	A1001A	JA8105A	1	
101005	A1002A	JA8113A	1	
101011	A1002B	A0902B	1	
101011	A1002B	A0902A	2	
101009	A1003A	JA8324B	2	
101009	A1003A	JA8224B	1	
101008	A1003B	JA8324A	2	
101008	A1003B	JA8224A	1	
101007	A1004B	JA8231A	1	
101007	A1004B	JA8331A	2	
100407	A1005B	A1023B	2	
100404	A1012A	JA8001A	1	
100409	A1012B	JA8009B	1	
100409	A1012B	A0214B	2	
101006	A1013A	B0532B	1	
101004	A1014B	B0912A	1	
100403	A1015B	B1016A	1	
100403	A1015B	A0407A	2	
101003	A1017A	B0923B	1	
200921	A1017B	B0804B	2	
101010	A1021A	A0416B	1	
101002	A1021B	A0424B	1	
101001	A1022A	B0926B	1	
100407	A1023B	A1005B	2	
100407	A1023B	A0415B	1	
101015	A1026A	JA8006A	1	
100408	A1026B	JA8005A	1	
101018	A1027A	JA8010A	1	
100405	A1027B	A0412B	2	
101013	A1028A	JA8005B	1	
101017	A1028B	JA8003B	1	
101014	A1029A	JA8006B	1	
101016	A1029B	JA8004B	1	
200927	A1030B	JA8004A	2	

TITLE				WL	DOCUMENT NO.	SHEET NO.	REV.
Logic Wirewrap - Applicable to 50 Pin I/O						6	M

SIGNAL NAME OR NUMBER IDENTIFICATION	ORIGIN	DESTINATION	Z LEVEL	NOTES
300018	A1032B	JA8114B	1	
300018	A1032B	A0932A	2	
101012	A1033B	A0933B	1	
101012	A1033B	A0933A	2	
101019	A1034A	JA8010B	1	
200108	B0102B	A0408A	1	
200211	B0103A	B0231A	1	
200211	B0103A	B0726B	?	
200802	B0104A	A0216A	1	
200802	B0104A	B0304A	?	
200801	B0104B	B0304B	?	
200114	B0105A	JA8225A	1	
200113	B0105B	JA8225B	1	
200112	B0106A	JA8218A	1	
200111	B0106B	JA8218B	1	
200622	B0107A	B0307A	?	
200915	B0107B	B0307B	?	
200118	B0108A	JA8216A	1	
200117	B0108B	JA8216B	1	
200116	B0109A	JA8215A	1	
200115	B0109B	JA8215B	1	
200102	B0110A	B0521A	1	
200101	B0110B	B0516A	1	
200132	B0111A	JA8239B	1	
200131	B0111B	JA8240A	1	
200134	B0112A	JA8238B	1	
200133	B0112B	JA8238A	1	
200231	B0113A	B0221A	?	
200230	B0113B	B0221B	?	
200233	B0114A	B0217A	?	
200232	B0114B	B0217B	?	
200104	B0115A	A0431A	1	
200103	B0115B	A0432A	1	
200204	B0116A	A0225B	1	
200204	B0116A	B0227A	?	
200202	B0116B	A0226B	?	
200924	B0117A	B0626A	1	
200221	B0117B	A0223A	1	
200221	B0117B	B0202A	?	
200202	B0121A	B0224A	?	
200202	B0121A	A0226B	1	
200501	B0121B	A0217B	1	
200501	B0121B	B0203B	?	
200110	B0122A	B0134A	1	
200206	B0122B	B0228A	?	
200206	B0122B	A0225A	1	
100504	B0123A	A0222A	?	
100504	B0123A	B0323A	1	
100101	B0123B	B0323B	1	
100108	B0123B	A0128B	2	
200912	B0124A	B0632A	?	
200912	B0124A	B0324A	1	

TITLE	WL	DOCUMENT NO.	SHEET NO.	REV.
Logic Wirewrap - Applicable to 50 Pin I/O			7	M

SIGNAL NAME OR NUMBER IDENTIFICATION	ORIGIN	DESTINATION	Z LEVEL	NOTES
100406	B0124B	B0324B	?	
200122	B0125A	JA8219A	1	
200121	B0125B	JA8219B	1	
200120	B0126A	JA8217A	1	
200119	B0126B	JA8217B	1	
200124	B0127A	JA8220A	1	
200123	B0127B	JA8220B	1	
200126	B0128A	JA8234A	1	
200125	B0128B	JA8233B	1	
200130	B0129A	JA8237A	1	
200129	B0129B	JA8236B	1	
200128	B0130A	JA8235A	1	
200127	B0130B	JA8235B	1	
100602	B0131A	B0331A	?	
100601	B0131B	B0331B	?	
200105	B0132A	JA8102A	1	
200107	B0132B	JA8104A	1	
200106	B0133B	JA8103A	1	
200110	B0134A	B0122A	1	
200221	B0202A	B0117B	?	
200221	B0202A	B0402A	1	
200222	B0202B	A0524B	1	
200217	B0203A	B0403A	1	
200217	B0203A	A0223B	?	
200501	B0203B	B0533A	1	
200501	B0203B	B0121B	?	
200225	B0204A	A0429A	1	
200224	B0204B	A0429B	1	
200227	B0205A	B0223A	?	
200226	B0205B	B0223B	?	
200229	B0206A	B0222A	?	
200228	B0206B	B0222B	?	
200253	B0207A	JA8203B	1	
200252	B0207B	JA8203A	1	
200251	B0208A	JA8214B	1	
200250	B0208B	JA8214A	1	
200245	B0209A	JA8212B	1	
200244	B0209B	JA8212A	1	
200243	B0210A	B1022A	?	
200243	B0210A	JA8213B	1	
200242	B0210B	B1022B	?	
200242	B0210B	JA8213A	1	
200249	B0211A	JA8202B	1	
200248	B0211B	JA8202A	1	
200247	B0212A	JA8201B	1	
200246	B0212B	JA8201A	1	
200241	B0213A	JA8211B	1	
200240	B0213B	JA8211A	1	
200239	B0214A	JA8210B	1	
200238	B0214B	JA8210A	1	
200237	B0215A	JA8209B	1	
200236	B0215B	JA8209A	1	

TITLE		DOCUMENT NO.	SHEET NO.	REV.
Logic Wirewrap - Applicable to 50 Pin I/O	WL		8	M

SIGNAL NAME OR NUMBER IDENTIFICATION	ORIGIN	DESTINATION	Z LEVEL	NOTES
200235	B0216A	JA8208B	1	
200234	B0216B	JA8208A	1	
200233	B0217A	B0114A	2	
200233	B0217A	JA8207B	1	
200232	B0217B	JA8207A	1	
200232	B0217B	B0114B	2	
200231	B0221A	B0113A	2	
200231	B0221A	JA8206B	1	
200230	B0221B	JA8206A	1	
200230	B0221B	B0113B	2	
200229	B0222A	JA8205B	1	
200229	B0222A	B0206A	2	
200228	B0222B	JA8205A	1	
200228	B0222B	B0206B	2	
200227	B0223A	JA8204B	1	
200227	B0223A	B0205A	2	
200226	B0223B	JA8204A	1	
200226	B0223B	B0205B	2	
200202	B0224A	B0424A	1	
200202	B0224A	B0121A	2	
200208	B0224B	A0224A	2	
200208	B0224B	B0424B	1	
200216	B0225A	B0425A	1	
200216	B0225A	A0226A	2	
200212	B0225B	A0229A	2	
200212	B0225B	B0425B	1	
200214	B0226A	A0227A	2	
200214	B0226A	B0426A	1	
200210	B0226B	B0426B	1	
200210	B0226B	A0228A	2	
200204	B0227A	B0427A	1	
200204	B0227A	B0116A	2	
200201	B0227B	B0616B	1	
200201	B0227B	A0413A	2	
200206	B0228A	B0428A	1	
200206	B0228A	B0122B	2	
200205	B0228B	A0822B	1	
200203	B0229A	A0413B	1	
200207	B0229B	A0821A	1	
200209	B0230A	A0412A	1	
200213	B0230B	B0812B	1	
200211	B0231A	A0613B	2	
200211	B0231A	B0103A	1	
200215	B0231B	A0604B	1	
200220	B0232A	A0232A	2	
200220	B0232A	B0432A	1	
200218	B0232B	A0224B	2	
200218	B0232B	B0432B	1	
200219	B0233A	A0603B	1	
200223	B0233B	B0433B	1	
200223	B0233B	A0230A	2	
300025	B0234A	JA8333A	2	

TITLE	WL	DOCUMENT NO.	SHEET NO.	REV.
Logic Wirewrap - Applicable to 50 Pin I/O			9	M

SIGNAL NAME OR NUMBER IDENTIFICATION	ORIGIN	DESTINATION	Z LEVEL	NOTES
300025	B0234A	JA8233A	1	
200802	B0304A	B0104A	2	
200802	B0304A	B0813B	1	
200801	B0304B	B0821B	1	
200801	B0304B	B0104B	2	
200308	B0305A	JA8325A	1	
200307	B0305B	JA8325B	1	
200306	B0306A	JA8318A	1	
200305	B0306B	JA8318B	1	
200622	B0307A	B0107A	2	
200622	B0307A	B0614B	1	
200915	B0307B	B0107B	2	
200915	B0307B	B0911A	1	
200312	B0308A	JA8316A	1	
200311	B0308B	JA8316B	1	
200310	B0309A	JA8315A	1	
200309	B0309B	JA8315B	1	
200302	B0310A	B0517B	1	
200301	B0310B	B0515B	1	
200326	B0311A	JA8339B	1	
200325	B0311B	JA8340A	1	
200328	B0312A	JA8338B	1	
200327	B0312B	JA8338A	1	
200409	B0313A	B0421A	2	
200408	B0313B	B0421B	2	
200411	B0314A	B0417A	2	
200410	B0314B	B0417B	2	
200304	B0315A	B0511A	1	
200303	B0315B	B0510B	1	
200504	B0321B	B1030A	1	
200504	B0321B	B0403B	2	
100504	B0323A	B0123A	1	
100101	B0323B	B0123B	1	
200912	B0324A	B0124A	1	
200912	B0324A	B0605B	2	
100406	B0324B	A0426B	1	
100406	B0324B	B0124B	2	
200316	B0325A	JA8319A	1	
200315	B0325B	JA8319B	1	
200314	B0326A	JA8317A	1	
200313	B0326B	JA8317B	1	
200318	B0327A	JA8320A	1	
200317	B0327B	JA8320B	1	
200320	B0328A	JA8334A	1	
200319	B0328B	JA8333B	1	
200324	B0329A	JA8337A	1	
200323	B0329B	JA8336B	1	
200322	B0330A	JA8335A	1	
200321	B0330B	JA8335B	1	
100602	B0331A	B0131A	2	
100602	B0331A	A0627B	1	
100601	B0331B	A0626B	1	

TITLE	WL	DOCUMENT NO.	SHEET NO.	REV.
Logic Wirewrap - Applicable to 50 Pin I/O			10	M

SIGNAL NAME OR NUMBER IDENTIFICATION	ORIGIN	DESTINATION	Z LEVEL	NOTES
100601	B0331B	B0131B	2	
300026	B0334A	JA8234B	1	
300026	B0334A	JA8334B	2	
200221	B0402A	B0202A	1	
200401	B0402B	B0732B	1	
200217	B0403A	B0203A	1	
200217	B0403A	B0531A	2	
200504	B0403B	B0321B	2	
200504	B0403B	B0532A	1	
200403	B0404A	B0503B	1	
200402	B0404B	B0510A	1	
200405	B0405A	B0423A	2	
200404	B0405B	B0423B	2	
200407	B0406A	B0422A	2	
200406	B0406B	B0422B	2	
200431	B0407A	JA8303B	1	
200430	B0407B	JA8303A	1	
200429	B0408A	JA8314B	1	
200428	B0408B	JA8314A	1	
200423	B0409A	JA8312B	1	
200422	B0409B	JA8312A	1	
200421	B0410A	B1023A	2	
200421	B0410A	JA8313B	1	
200420	B0410B	B1023B	2	
200420	B0410B	JA8313A	1	
200427	B0411A	JA8302B	1	
200426	B0411B	JA8302A	1	
200425	B0412A	JA8301B	1	
200424	B0412B	JA8301A	1	
200419	B0413A	JA8311B	1	
200418	B0413B	JA8311A	1	
200417	B0414A	JA8310B	1	
200416	B0414B	JA8310A	1	
200415	B0415A	JA8309B	1	
200414	B0415B	JA8309A	1	
200413	B0416A	JA8308B	1	
200412	B0416B	JA8308A	1	
200411	B0417A	JA8307B	1	
200411	B0417A	B0314A	2	
200410	B0417B	JA8307A	1	
200410	B0417B	B0314B	2	
200409	B0421A	JA8306B	1	
200409	B0421A	B0313A	2	
200408	B0421B	B0313B	2	
200408	B0421B	JA8306A	1	
200407	B0422A	B0406A	2	
200407	B0422A	JA8305B	1	
200406	B0422B	B0406B	2	
200406	B0422B	JA8305A	1	
200405	B0423A	JA8304B	1	
200405	B0423A	B0405A	2	
200404	B0423B	JA8304A	1	

TITLE	WL	DOCUMENT NO.	SHEET NO.	REV.
Logic Wirewrap - Applicable to 50 Pin I/O			11	Y

SIGNAL NAME OR NUMBER IDENTIFICATION	ORIGIN	DESTINATION	Z LEVEL	NOTES
200404	B0423B	B0405B	2	
200202	B0424A	B0224A	1	
200202	B0424A	B0631A	2	
200208	B0424B	B0224B	1	
200208	B0424B	B0628B	2	
200216	B0425A	B0225A	1	
200216	B0425A	B0626B	2	
200212	B0425B	B0624A	2	
200212	B0425B	B0225B	1	
200214	B0426A	B0622B	2	
200214	B0426A	B0226A	1	
200210	B0426B	B0629B	2	
200210	B0426B	B0226B	1	
200204	B0427A	B0633A	2	
200204	B0427A	B0227A	1	
200206	B0428A	B0228A	1	
200206	B0428A	B0630A	2	
200220	B0432A	B0606B	2	
200220	B0432A	B0232A	1	
200218	B0432B	B0232B	1	
200218	B0432B	B0621A	2	
200223	B0433B	B0502A	2	
200223	B0433B	B0233B	1	
300027	B0434A	JA8236A	1	
300027	B0434A	JA8336A	2	
200223	B0502A	B1009A	1	
200223	B0502A	B0433B	2	
200519	B0502B	B1025B	2	
200403	B0503B	B0404A	1	
200503	B0505A	JA8221A	1	
200502	B0505B	JA8221B	1	
200914	B0506A	B0932A	2	
201003	B0506B	B1027A	2	
201020	B0507A	B1010A	1	
200402	B0510A	B0404B	1	
200303	B0510B	B0315B	1	
200304	B0511A	B0315A	1	
100415	B0512A	A0430A	2	
100414	B0512B	A0431B	2	
100413	B0513A	A0427A	2	
100412	B0513B	A0428B	2	
100411	B0514A	A0410B	1	
200523	B0515A	B1030B	1	
200301	B0515B	B0310B	1	
200101	B0516A	B0110B	1	
200515	B0516B	B0723B	1	
200522	B0517A	B1027B	1	
200302	B0517B	B0310A	1	
200102	B0521A	B0110A	1	
201001	B0521B	B1016B	1	
200516	B0522A	B0710B	1	
201002	B0523B	B1002A	1	
200514	B0524A	JA8322B	1	

TITLE	WL	DOCUMENT NO.	SHEET NO.	REV.
Logic Wirewrap - Applicable to 50 Pin I/O			12	M

SIGNAL NAME OR NUMBER IDENTIFICATION	ORIGIN	DESTINATION	Z LEVEL	NOTES.
200513	B0524B	JA8322A	1	
200508	B0525A	JA8321A	1	
200507	B0525B	JA8321B	1	
200506	B0526A	JA8323A	1	
200505	B0526B	JA8323B	1	
200512	B0527A	JA8342A	1	
200511	B0527B	JA8342B	1	
200510	B0529A	JA8341B	1	
200509	B0529B	JA8341A	1	
200703	B0530A	B0709B	1	
100403	B0530B	B0707B	2	
100403	B0530B	A0407A	1	
200217	B0531A	B0625A	1	
200217	B0531A	B0403A	2	
200521	B0531B	B1010B	1	
200504	B0532A	B0403B	1	
200504	B0532A	A0221B	2	
101006	B0532B	A1013A	1	
101006	B0532B	B1008B	2	
200501	B0533A	B0203B	1	
200520	B0533B	B0708B	1	
300028	B0534A	JA8237B	1	
300028	B0534A	JA8337B	2	
200610	B0602A	A0711B	1	
200611	B0602B	A0725B	1	
200612	B0603A	A0712B	1	
200908	B0603B	B0914A	1	
200613	B0604A	A0713A	1	
200608	B0604B	A0727A	1	
200920	B0605A	B0910B	1	
200912	B0605B	B0903A	1	
200912	B0605B	B0324A	2	
200614	B0606A	B0917B	1	
200220	B0606B	B0432A	2	
200606	B0607A	B0827B	1	
200615	B0607B	B0922B	1	
200618	B0609A	A0717A	1	
200617	B0609B	A0715A	1	
200616	B0610A	A0713B	1	
200619	B0611B	A0716A	1	
200601	B0613A	JA8110A	1	
200604	B0613B	B0904A	1	
200607	B0614A	B0914B	1	
200622	B0614B	B0307A	1	
100404	B0615A	B0933B	1	
200620	B0616A	JA8101B	1	
200201	B0616B	B0227B	1	
200201	B0616B	B0712B	2	
200609	B0617B	A0926B	1	
200218	B0621A	B0432B	2	
200218	B0621A	B0832A	1	
200214	B0622B	B0426A	2	

TITLE	WL	DOCUMENT NO.	SHEET NO.	REV.
Logic Wirewrap - Applicable to 50 Pin I/O			13	M

SIGNAL NAME OR NUMBER IDENTIFICATION	ORIGIN	DESTI-NATION	Z LEVEL	NOTES
200214	B0622B	B0826B	1	
200602	B0623B	JA8111A	1	
200212	B0624A	B0826A	1	
200212	B0624A	B0425B	2	
200603	B0624B	JA8112A	1	
200217	B0625A	B0531A	1	
200217	B0625A	B0833B	2	
200916	B0625B	B0915B	1	
200924	B0626A	B0817A	2	
200924	B0626A	B0117A	1	
200216	B0626B	B0811B	1	
200216	B0626B	B0425A	2	
200208	B0628B	B0823B	1	
200208	B0628B	B0424B	2	
200210	B0629B	B0822A	1	
200210	B0629B	B0426B	2	
200206	B0630A	B0823A	1	
200206	B0630A	B0428A	2	
200202	B0631A	B0832B	1	
200202	B0631A	B0424A	2	
200912	B0632A	B0124A	2	
200605	B0632B	B0910A	1	
200204	B0633A	B0427A	2	
200204	B0633A	B0825A	1	
200621	B0633B	A0217A	1	
300029	B0634A	JA8339A	2	
300029	B0634A	JA8239A	1	
100403	B0707B	B0530B	2	
100403	B0707B	A0528B	1	
200520	B0708B	B0533B	1	
100107	B0709A	A0130B	1	
200703	B0709B	B0530A	1	
200516	B0710B	B0522A	1	
200201	B0712B	B0616B	2	
200515	B0723B	B0516B	1	
200211	B0726B	B0103A	2	
200701	B0729A	JA8108B	1	
200702	B0729B	JA8109B	1	
200401	B0732B	B0402B	1	
300030	B0734A	JA8240B	1	
300030	B0734A	JA8340B	2	
200812	B0801A	B0811A	1	
100307	B0804A	A0311B	1	
200921	B0804B	B0921B	1	
200921	B0804B	A1017B	2	
200813	B0805A	B0814A	1	
100306	B0805B	A0332A	1	
200807	B0806A	B0911B	1	
200808	B0806B	B0924A	1	
200805	B0807A	B0932B	1	
200810	B0807B	B0925B	1	
100802	B0810A	A0809B	1	

TITLE				WL	DOCUMENT NO.	SHEET NO.	REV.
Logic Wirewrap - Applicable to 50 Pin I/O						14	M

SIGNAL NAME OR NUMBER IDENTIFICATION	ORIGIN	DESTINATION	Z LEVEL	NOTES
200804	B0810B	A0814B	1	
200812	B0811A	B0801A	1	
200216	B0811B	B0626B	1	
200926	B0812A	B0913B	1	
200926	B0812A	A0327B	2	
200213	B0812B	B0230B	1	
200213	B0812B	B0927A	2	
200814	B0813A	B0815B	2	
200802	B0813B	B0304A	1	
200813	B0814A	B0814B	2	
200813	B0814A	B0805A	1	
200813	B0814B	B0825B	1	
200813	B0814B	B0814A	2	
100104	B0815A	A0126B	1	
200814	B0815B	B0824B	1	
200814	B0815B	B0813A	2	
100801	B0816A	A0808A	1	
200806	B0816B	B0902A	1	
200924	B0817A	B0626A	2	
200924	B0817A	B0906B	1	
200919	B0817B	B0907B	1	
200919	B0817B	A0425B	2	
200809	B0821A	B0917A	1	
200801	B0821B	B0304B	1	
200210	B0822A	B0629B	1	
100305	B0822B	A0333A	2	
200206	B0823A	B0630A	1	
200208	B0823B	B0628B	1	
200814	B0824A	B0824B	2	
200814	B0824A	B0834A	1	
200814	B0824B	B0824A	2	
200814	B0824B	B0815B	1	
200204	B0825A	B0633A	1	
200813	B0825B	B0814B	1	
200813	B0825B	B0829A	2	
200212	B0826A	B0624A	1	
200214	B0826B	B0622B	1	
200803	B0827A	B0933A	1	
200606	B0827B	B0902B	2	
200606	B0827B	B0607A	1	
100805	B0828B	A0823A	1	
200813	B0829A	B0829B	1	
200813	B0829A	B0825B	2	
200813	B0829B	B0829A	1	
200813	B0829B	B0830A	2	
200813	B0830A	B0829B	2	
100105	B0831A	A0113B	1	
200218	B0832A	B0621A	1	
200202	B0832B	B0631A	1	
200811	B0833A	B0929A	1	
200217	B0833B	B0625A	2	
200217	B0833B	B1003A	1	

TITLE	WL	DOCUMENT NO.	SHEET NO.	REV.
Logic Wirewrap - Applicable to 50 Pin I/O			15	M

SIGNAL NAME OR NUMBER IDENTIFICATION	ORIGIN	DESTI-NATION	Z LEVEL	NOTES
200814	B0834A	JA8243A	2	
200814	B0834A	B0824A	1	
200806	B0902A	B0816B	1	
200606	B0902B	B0827B	2	
200606	B0902B	B0905B	1	
200912	B0903A	A0832A	2	
200912	B0903A	B0605B	1	
200904	B0903B	A0410A	1	
200604	B0904A	B0613B	1	
200903	B0904B	A0816A	1	
100807	B0905A	A0812B	1	
200606	B0905B	B0902B	1	
200906	B0906A	A0823B	1	
200924	B0906B	B0817A	1	
200924	B0906B	A0810B	2	
200902	B0907A	A0923B	1	
200919	B0907B	B0817B	1	
200901	B0908A	A0922B	1	
200907	B0909A	B0916A	2	
200605	B0910A	B0632B	1	
200920	B0910B	B0605A	1	
200915	B0911A	B0307B	1	
200807	B0911B	B0806A	1	
101004	B0912A	A1014B	1	
200923	B0912B	A0708A	1	
200911	B0913A	A0710A	1	
200926	B0913B	B0812A	1	
200926	B0913B	A0925B	2	
200908	B0914A	A0812A	2	
200908	B0914A	B0603B	1	
200607	B0914B	B0614A	1	
100901	B0915A	A0924B	2	
200916	B0915B	B0625B	1	
200907	B0916A	A0717B	1	
200907	B0916A	B0909A	2	
200905	B0916B	A0722B	1	
200809	B0917A	B0821A	1	
200614	B0917B	B0606A	1	
200921	B0921B	B0804B	1	
200921	B0921B	A0916B	2	
200910	B0922A	A0813A	1	
200615	B0922B	B0607B	1	
200917	B0923A	B0934A	1	
101003	B0923B	A1017A	1	
200808	B0924A	B0806B	1	
200927	B0924B	JA8004A	1	
200922	B0925A	A0915B	1	
200810	B0925B	B0807B	1	
200925	B0926A	A0825B	1	
101001	B0926B	A1022A	1	
200213	B0927A	B0812B	2	
100302	B0927B	A0308B	1	

TITLE	WL	DOCUMENT NO.	SHEET NO.	REV.
Logic Wirewrap - Applicable to 50 Pin I/O			16	Y

SIGNAL NAME OR NUMBER IDENTIFICATION	ORIGIN	DESTINATION	Z LEVEL	NOTES
100301	B0928B	A0307B	1	
200811	B0929A	B0833A	1	
200922	B0929B	A0707B	1	
200913	B0930A	A0813B	1	
200909	B0930B	A0927B	1	
200918	B0931A	A0702A	1	
100402	B0931B	A0414A	1	
200914	B0932A	B0506A	2	
200914	B0932A	B1009B	1	
200805	B0932B	B0807A	1	
200803	B0933A	B0827A	1	
100404	B0933B	B0615A	1	
100404	B0933B	A0707A	2	
200917	B0934A	B0923A	1	
200917	B0934A	JA8343A	2	
201002	B1002A	B0523B	1	
200217	B1003A	B0833B	1	
201005	B1007A	JA8222B	1	
201006	B1007B	JA8222A	1	
201004	B1008A	A0811B	1	
101006	B1008B	B0532B	2	
200223	B1009A	B0502A	1	
200914	B1009B	B0932A	1	
201020	B1010A	B0507A	1	
200521	B1010B	B0531B	1	
100411	B1015B	A0410B	2	
100403	B1016A	A1015B	1	
201001	B1016B	B0521B	1	
200243	B1022A	B0210A	2	
200242	B1022B	B0210B	2	
200421	B1023A	B0410A	2	
200420	B1023B	B0410B	2	
200519	B1025B	B0502B	2	
200501	B1026A	A0217B	2	
201003	B1027A	B0506B	2	
200522	B1027B	B0517A	1	
201008	B1028A	JA8242A	1	
201007	B1028B	JA8242B	1	
201010	B1029A	JA8241B	1	
201009	B1029B	JA8241A	1	
200504	B1030A	B0321B	1	
200523	B1030B	B0515A	1	
201012	B1031A	JA8223A	1	
201011	B1031B	JA8223B	1	
300031	B1034A	JA8244B	1	
300031	B1034A	JA8344B	2	
100404	JA8001A	A1012A	1	
100404	JA8001A	A0411B	2	
100410	JA8002B	A0409A	1	
101020	JA8003A	A0133B	1	
101017	JA8003B	A1028B	1	
200927	JA8004A	A1030B	2	
200927	JA8004A	B0924B	1	

TITLE				WL	DOCUMENT NO.	SHEET NO.	REV.
Logic Wirewrap - Applicable to 50 Pin I/O						17	M

SIGNAL NAME OR NUMBER IDENTIFICATION	ORIGIN	DESTINATION	Z LEVEL	NOTES
101016	JA8004B	A1029B	1	
100408	JA8005A	A1026B	1	
101013	JA8005B	A1028A	1	
101015	JA8006A	A1026A	1	
101014	JA8006B	A1029A	1	
100416	JA8007A	A0101A	1	
100416	JA8007B	A0101A	2	
300016	JA8008A	JA8102B	1	
300017	JA8008B	JA8112B	1	
100409	JA8009B	A1012B	1	
101018	JA8010A	A1027A	1	
101019	JA8010B	A1034A	1	
100412	JA8011A	A0428B	1	
100414	JA8011B	A0431B	1	
100413	JA8012A	A0427A	1	
100405	JA8013A	A0412B	1	
100415	JA8014A	A0430A	1	
100417	JA8014B	A0134B	1	
300013	JA8101A	A0601A	1	
200620	JA8101B	B0616A	1	
200105	JA8102A	B0132A	1	
300016	JA8102B	JA8008A	1	
200106	JA8103A	B0133B	1	
300019	JA8103B	A0601B	1	
200107	JA8104A	B0132B	1	
100803	JA8104B	A0825A	1	
300006	JA8105A	A1001A	1	
300004	JA8105B	A0521B	1	
300005	JA8106A	A0522B	1	
300002	JA8106B	A0508B	1	
300015	JA8107A	A0801A	1	
300003	JA8107B	A0507B	1	
300001	JA8108A	A0414B	1	
200701	JA8108B	B0729A	1	
300007	JA8109A	A0409B	1	
200702	JA8109B	B0729B	1	
200601	JA8110A	B0613A	1	
200201	JA8110B	A0413A	1	
200602	JA8111A	B0623B	1	
300020	JA8111B	A0634B	1	
200603	JA8112A	B0624B	1	
300017	JA8112B	JA8008B	1	
101005	JA8113A	A1002A	1	
300021	JA8113B	A0633B	1	
300014	JA8114A	A0701A	1	
300018	JA8114B	A1032B	1	
300018	JA8114B	A0932B	2	
200246	JA8201A	B0212B	1	
200247	JA8201B	B0212A	1	
200248	JA8202A	B0211B	1	
200249	JA8202B	B0211A	1	
200252	JA8203A	B0207B	1	

TITLE	WL	DOCUMENT NO.	SHEET NO.	REV.
Logic Wirewrap - Applicable to 50 Pin I/O			18	M

SIGNAL NAME OR NUMBER IDENTIFICATION	ORIGIN	DESTI-NATION	Z LEVEL	NOTES
200253	JA8203B	B0207A	1	
200226	JA8204A	B0223B	1	
200227	JA8204B	B0223A	1	
200228	JA8205A	B0222B	1	
200229	JA8205B	B0222A	1	
200230	JA8206A	B0221B	1	
200231	JA8206B	B0221A	1	
200232	JA8207A	B0217B	1	
200233	JA8207B	B0217A	1	
200234	JA8208A	B0216B	1	
200235	JA8208B	B0216A	1	
200236	JA8209A	B0215B	1	
200237	JA8209B	B0215A	1	
200238	JA8210A	B0214B	1	
200239	JA8210B	B0214A	1	
200240	JA8211A	B0213B	1	
200241	JA8211B	B0213A	1	
200244	JA8212A	B0209B	1	
200245	JA8212B	B0209A	1	
200242	JA8213A	B0210B	1	
200243	JA8213B	B0210A	1	
200250	JA8214A	B0208B	1	
200251	JA8214B	B0208A	1	
200116	JA8215A	B0109A	1	
200115	JA8215B	B0109B	1	
200118	JA8216A	B0108A	1	
200117	JA8216B	B0108B	1	
200120	JA8217A	B0126A	1	
200119	JA8217B	B0126B	1	
200112	JA8218A	B0106A	1	
200111	JA8218B	B0106B	1	
200122	JA8219A	B0125A	1	
200121	JA8219B	B0125B	1	
200124	JA8220A	B0127A	1	
200123	JA8220B	B0127B	1	
200503	JA8221A	B0505A	1	
200502	JA8221B	B0505B	1	
201006	JA8222A	B1007B	1	
201005	JA8222B	B1007A	1	
201012	JA8223A	B1031A	1	
201011	JA8223B	B1031B	1	
101008	JA8224A	A1003B	1	
101009	JA8224B	A1003A	1	
200114	JA8225A	B0105A	1	
200113	JA8225B	B0105B	1	
101007	JA8231A	A1004B	1	
300025	JA8233A	B0234A	1	
200125	JA8233B	B0128B	1	
200126	JA8234A	B0128A	1	
300026	JA8234B	B0334A	1	
200128	JA8235A	B0130A	1	
200127	JA8235B	B0130B	1	

TITLE	WL	DOCUMENT NO.	SHEET NO.	REV.
Logic Wirewrap - Applicable to 50 Pin I/O			19	M

SIGNAL NAME OR NUMBER IDENTIFICATION	ORIGIN	DESTINATION	Z LEVEL	NOTES
300027	JA8236A	B0434A	1	
200129	JA82368	B0129B	1	
200130	JA8237A	B0129A	1	
300028	JA8237B	B0534A	1	
200133	JA8238A	B0112B	1	
200134	JA82388	B0112A	1	
300029	JA8239A	B0634A	1	
200132	JA82398	B0111A	1	
200131	JA8240A	B0111B	1	
300030	JA82408	B0734A	1	
201009	JA8241A	B1029B	1	
201010	JA82418	B1029A	1	
201008	JA8242A	B1028A	1	
201007	JA82428	B1028B	1	
200814	JA8243A	B0834A	2	
300031	JA82448	B1034A	1	
200424	JA8301A	B0412B	1	
200425	JA8301B	B0412A	1	
200426	JA8302A	B0411B	1	
200427	JA8302B	B0411A	1	
200430	JA8303A	B0407B	1	
200431	JA8303B	B0407A	1	
200404	JA8304A	B0423B	1	
200405	JA8304B	B0423A	1	
200406	JA8305A	B0422B	1	
200407	JA8305B	B0422A	1	
200408	JA8306A	B0421B	1	
200409	JA8306B	B0421A	1	
200410	JA8307A	B0417B	1	
200411	JA8307B	B0417A	1	
200412	JA8308A	B0416B	1	
200413	JA8308B	B0416A	1	
200414	JA8309A	B0415B	1	
200415	JA8309B	B0415A	1	
200416	JA8310A	B0414B	1	
200417	JA8310B	B0414A	1	
200418	JA8311A	B0413B	1	
200419	JA8311B	B0413A	1	
200422	JA8312A	B0409B	1	
200423	JA8312B	B0409A	1	
200420	JA8313A	B0410B	1	
200421	JA8313B	B0410A	1	
200428	JA8314A	B0408B	1	
200429	JA8314B	B0408A	1	
200310	JA8315A	B0309A	1	
200309	JA8315B	B0309B	1	
200312	JA8316A	B0308A	1	
200311	JA8316B	B0308B	1	
200314	JA8317A	B0326A	1	
200313	JA8317B	B0326B	1	
200306	JA8318A	B0306A	1	
200305	JA8318B	B0306B	1	

TITLE				WL	DOCUMENT NO.	SHEET NO.	REV.
Logic Wirewrap - Applicable to 50 Pin I/O						20	M

SIGNAL NAME OR NUMBER IDENTIFICATION	ORIGIN	DESTINATION	Z LEVEL	NOTES
200316	JA8319A	B0325A	1	
200315	JA8319B	B0325B	1	
200318	JA8320A	B0327A	1	
200317	JA8320B	B0327B	1	
200508	JA8321A	B0525A	1	
200507	JA8321B	B0525B	1	
200513	JA8322A	B0524B	1	
200514	JA8322B	B0524A	1	
200506	JA8323A	B0526A	1	
200505	JA8323B	B0526B	1	
101008	JA8324A	A1003B	2	
101009	JA8324B	A1003A	2	
200308	JA8325A	B0305A	1	
200307	JA8325B	B0305B	1	
101007	JA8331A	A1004B	2	
300025	JA8333A	B0234A	2	
200319	JA8333B	B0328B	1	
200320	JA8334A	B0328A	1	
300026	JA8334B	B0334A	2	
200322	JA8335A	B0330A	1	
200321	JA8335B	B0330B	1	
300027	JA8336A	B0434A	2	
200323	JA8336B	B0329B	1	
200324	JA8337A	B0329A	1	
300028	JA8337B	B0534A	2	
200327	JA8338A	B0312B	1	
200328	JA8338B	B0312A	1	
300029	JA8339A	B0634A	2	
200326	JA8339B	B0311A	1	
200325	JA8340A	B0311B	1	
300030	JA8340B	B0734A	2	
200509	JA8341A	B0529B	1	
200510	JA8341B	B0529A	1	
200512	JA8342A	B0527A	1	
200511	JA8342B	B0527B	1	
200917	JA8343A	B0934A	2	
300031	JA8344B	B1034A	2	

INDEX AND SECTOR IN B CABLE

TITLE		WL	DOCUMENT NO.	SHEET NO.	REV.
Logic Wirewrap - Applicable to Index and Sector in B Cable			77568125	1 of 20	Y

SIGNAL NAME OR NUMBER IDENTIFICATION	ORIGIN	DESTINATION	Z LEVEL	NOTES
100416	A0101A	JA8007A	1	
100416	A0101A	JA8007B	2	
300023	A0101B	A0121B	1	
100305	A0104B	A0333A	1	
100101	A0112B	A0127B	2	
100101	A0112B	A0221A	1	
100105	A0113B	B0831A	1	
300022	A0114B	A0234B	1	
300023	A0121B	A0101B	1	
100304	A0122B	A0312B	1	
100103	A0123B	A0623B	1	
100102	A0124B	A0624B	1	
100104	A0126B	B0815A	1	
100101	A0127B	A0112B	2	
100108	A0128B	B0123B	2	
100107	A0130B	B0709A	1	
101020	A0133B	JA8003A	1	
100417	A0134B	JA8014B	1	
100309	A0213B	A0323B	1	
100409	A0214B	A1012B	2	
100308	A0215B	A0325B	1	
200802	A0216A	B0104A	1	
300024	A0216B	A0231A	2	
200621	A0217A	B0633B	1	
200501	A0217B	B1026A	?	
200501	A0217B	B0121B	1	
100101	A0221A	A0112B	1	
200504	A0221B	B0532A	?	
100504	A0222A	A0532B	1	
100504	A0222A	B0123A	?	
300024	A0222B	A0234A	?	
200221	A0223A	B0117B	1	
200217	A0223B	B0203A	?	
200208	A0224A	B0224B	?	
200218	A0224B	B0232B	?	
200206	A0225A	B0122B	1	
200204	A0225B	B0116A	1	
200216	A0226A	B0225A	?	
200202	A0226B	B0116B	?	
200202	A0226B	B0121A	1	
200214	A0227A	B0226A	?	
200210	A0228A	B0226B	?	
200212	A0229A	B0225B	?	
200223	A0230A	B0233B	?	
300024	A0231A	A0216B	?	
300024	A0231A	A0234A	1	
200220	A0232A	B0232A	2	
300024	A0234A	A0222B	?	
300024	A0234A	A0231A	1	
300022	A0234B	A0114B	1	
100301	A0307B	B0928B	1	

TITLE		WL	DOCUMENT NO.	SHEET NO.	REV.
Logic Wirewrap - Applicable to Index and Sector in B Cable				2	N

SIGNAL NAME OR NUMBER IDENTIFICATION	ORIGIN	DESTINATION	Z LEVEL	NOTES
100302	A0308B	B0927B	1	
100303	A0309B	A0826B	1	
100307	A0311B	B0804A	1	
100304	A0312B	A0122B	1	
100309	A0323B	A0213B	1	
100308	A0325B	A0215B	1	
200926	A0327B	B0812A	?	
100306	A0332A	B0805B	1	
100305	A0333A	A0104B	1	
100305	A0333A	B0822B	2	
100418	A0403B	A0903B	1	
100403	A0407A	B0530B	1	
100403	A0407A	A1015B	2	
200108	A0408A	B0102B	1	
100410	A0409A	JA8002B	1	
300007	A0409B	JA8109A	1	
200904	A0410A	B0903B	1	
100411	A0410B	B1015B	?	
100411	A0410B	B0514A	1	
100404	A0411B	JA8001A	?	
100404	A0411B	A0707A	1	
200209	A0412A	B0230A	1	
100405	A0412B	JA8013A	1	
100405	A0412B	A1027B	?	
200201	A0413A	JA8110B	1	
200201	A0413A	B0227B	?	
200203	A0413B	B0229A	1	
200203	A0413B	A0531B	?	
100402	A0414A	B0931B	1	
300001	A0414B	JA8108A	1	
100407	A0415B	A1023B	1	
101010	A0416B	A1021A	1	
101002	A0424B	A1021B	1	
200919	A0425B	B0817B	?	
100505	A0426A	A0525B	1	
100406	A0426B	B0324B	1	
100413	A0427A	JA8012A	1	
100413	A0427A	B0513A	?	
100412	A0428B	JA8011A	1	
100412	A0428B	B0513B	?	
200225	A0429A	B0204A	1	
200224	A0429B	B0204B	1	
100415	A0430A	B0512A	?	
100415	A0430A	JA8014A	1	
100804	A0430B	A0811A	1	
200104	A0431A	B0115A	1	
100414	A0431B	B0512B	?	
100414	A0431B	JA8011B	1	
200103	A0432A	B0115B	1	
100417	A0432B	A0932B	1	
201004	A0433A	A0523B	1	
100502	A0503B	A0610B	1	

TITLE		WL	DOCUMENT NO.	SHEET NO.	REV.
Logic Wirewrap - Applicable to Index and Sector in B Cable				3	N

SIGNAL NAME OR NUMBER IDENTIFICATION	ORIGIN	DESTINATION	Z LEVEL	NOTES
100501	A0504B	A0609B	1	
300003	A0507B	JA8107B	1	
300002	A0508B	JA8106B	1	
300004	A0521B	JA8105B	1	
300005	A0522B	JA8106A	1	
201004	A0523B	A0811B	2	
201004	A0523B	A0433A	1	
200222	A0524B	B0202B	1	
100505	A0525B	A0426A	1	
200211	A0527B	A0824A	?	
100403	A0528B	B0707B	1	
100503	A0530B	A0622B	1	
200203	A0531B	A0413B	2	
200203	A0531B	A0612B	1	
100504	A0532B	A0222A	1	
300013	A0601A	JA8101A	1	
300019	A0601B	JA8103B	1	
200219	A0603B	B0233A	1	
200215	A0604B	B0231B	1	
100501	A0609B	A0504B	1	
100502	A0610B	A0503B	1	
200203	A0612B	A0824B	?	
200203	A0612B	A0531B	1	
200211	A0613B	B0231A	?	
200211	A0613B	A0824A	1	
100503	A0622B	A0530B	1	
100103	A0623B	A0123B	1	
100102	A0624B	A0124B	1	
100601	A0626B	B0331B	1	
100602	A0627B	B0331A	1	
300021	A0633B	JA8113B	1	
300020	A0634B	JA8111B	1	
300014	A0701A	JA8114A	1	
200918	A0702A	B0931A	1	
100404	A0707A	B0933B	?	
100404	A0707A	A0411B	1	
200922	A0707B	B0929B	1	
200923	A0708A	B0912B	1	
200911	A0710A	B0913A	1	
200610	A0711B	B0602A	1	
200612	A0712B	B0603A	1	
200613	A0713A	B0604A	1	
200616	A0713B	B0610A	1	
200617	A0715A	B0609B	1	
100809	A0715B	A0826A	?	
200619	A0716A	B0611B	1	
200902	A0716B	A0923B	?	
200618	A0717A	B0609A	1	
200907	A0717B	B0916A	1	
200901	A0721B	A0922B	?	
200905	A0722B	B0916B	1	
100808	A0723B	A0809A	1	

TITLE		WL	DOCUMENT NO.	SHEET NO.	REV.
Logic Wirewrap - Applicable to Index and Sector in B Cable				4 -	N

SIGNAL NAME OR NUMBER IDENTIFICATION	ORIGIN	DESTINATION	Z LEVEL	NOTES
200611	A0725B	B0602B	1	
100701	A0726B	A0928B	1	
200608	A0727A	B0604B	1	
100703	A0727B	A0808B	1	
100902	A0728B	A0912B	1	
100702	A0730B	A0802A	1	
300015	A0801A	JA8107A	1	
100702	A0802A	A0730B	1	
100801	A0808A	B0816A	1	
100703	A0808B	A0727B	1	
100808	A0809A	A0723B	1	
100802	A0809B	B0810A	1	
200924	A0810B	B0906B	?	
100804	A0811A	A0430B	1	
201004	A0811B	B1008A	1	
201004	A0811B	A0523B	?	
200908	A0812A	B0914A	?	
100807	A0812B	B0905A	1	
200910	A0813A	B0922A	1	
200913	A0813B	B0930A	1	
200804	A0814B	B0810B	1	
200903	A0816A	B0904B	1	
200207	A0821A	B0229B	1	
100806	A0822A	A0927A	1	
200205	A0822B	B0228B	1	
100805	A0823A	B0828B	1	
200906	A0823B	B0906A	1	
200211	A0824A	A0613B	1	
200211	A0824A	A0527B	?	
200203	A0824B	A0612B	?	
100803	A0825A	JA8104B	1	
200925	A0825B	B0926A	1	
100809	A0826A	A0906A	1	
100809	A0826A	A0715B	?	
100303	A0826B	A0309B	1	
200912	A0832A	B0903A	?	
100901	A0833A	A0924B	1	
101011	A0902A	A1002B	?	
101011	A0902B	A1002B	1	
100418	A0903A	A0904A	1	
100418	A0903A	A0903B	?	
100418	A0903B	A0903A	?	
100418	A0903B	A0403B	1	
100418	A0904A	A0903A	1	
100418	A0904A	A0904B	?	
100418	A0904B	A0904A	?	
100809	A0906A	A0826A	1	
100902	A0912B	A0728B	1	
200922	A0915B	B0925A	1	
200921	A0916B	B0921B	?	
200901	A0922B	A0721B	?	
200901	A0922B	B0908A	1	

TITLE				DOCUMENT NO.	SHEET NO.	REV.
Logic Wirewrap - Applicable to Index and Sector in B Cable			WL		5	N

SIGNAL NAME OR NUMBER IDENTIFICATION	ORIGIN	DESTINATION	Z LEVEL	NOTES
200902	A0923B	B0907A	1	
200902	A0923B	A0716B	?	
100901	A0924B	B0915A	2	
100901	A0924B	A0833A	1	
200926	A0925B	B0913B	2	
200609	A0926B	B0617B	1	
100806	A0927A	A0822A	1	
200909	A0927B	B0930B	1	
100701	A0928B	A0726B	1	
300018	A0931A	A0932A	1	
300018	A0931A	A0931B	?	
300018	A0931B	A0931A	2	
300018	A0932A	A0931A	1	
300018	A0932A	A1032B	?	
100417	A0932B	A0432B	1	
300018	A0932B	JA81148	?	
101012	A0933A	A1033B	2	
101012	A0933B	A1033B	1	
300006	A1001A	JA8105A	1	
101005	A1002A	JA8113A	1	
101011	A1002B	A0902B	1	
101011	A1002B	A0902A	?	
101009	A1003A	JA8229B	1	
101009	A1003A	JA8329B	2	
101008	A1003B	JA8329A	?	
101008	A1003B	JA8229A	1	
101007	A1004B	JA8331A	?	
101007	A1004B	JA8231A	1	
100407	A1005B	A1023B	?	
100404	A1012A	JA8001A	1	
100409	A1012B	A0214B	?	
100409	A1012B	JA8009B	1	
101006	A1013A	B0532B	1	
101004	A1014B	B0912A	1	
100403	A1015B	A0407A	?	
100403	A1015B	B1016A	1	
101003	A1017A	B0923B	1	
200921	A1017B	B0804B	?	
101010	A1021A	A0416B	1	
101002	A1021B	A0424B	1	
101001	A1022A	B0926B	1	
100407	A1023B	A0415B	1	
100407	A1023B	A1005B	?	
101015	A1026A	JA8006A	1	
100408	A1026B	JA8005A	1	
101018	A1027A	JA8010A	1	
100405	A1027B	A0412B	2	
101013	A1028A	JA8005B	1	
101017	A1028B	JA8003B	1	
101014	A1029A	JA8006B	1	
101016	A1029B	JA8004B	1	
200927	A1030B	JA8004A	?	

TITLE		WL	DOCUMENT NO.	SHEET NO.	REV.
Logic Wirewrap - Applicable to Index and Sector in B Cable				6	N-

SIGNAL NAME OR NUMBER IDENTIFICATION	ORIGIN	DESTI-NATION	Z LEVEL	NOTES
300018	A1032B	A0932A	2	
300018	A1032B	JA8114B	1	
101012	A1033B	A0933B	1	
101012	A1033B	A0933A	2	
101019	A1034A	JA8010B	1	
200108	B0102B	A0408A	1	
200211	B0103A	B0726B	2	
200211	B0103A	B0231A	1	
200802	B0104A	A0216A	1	
200802	B0104A	B0304A	2	
200801	B0104B	B0304B	2	
200114	B0105A	JA8245A	1	
200113	B0105B	JA8245B	1	
200112	B0106A	JA8244A	1	
200111	B0106B	JA8243B	1	
200622	B0107A	B0307A	2	
200915	B0107B	B0307B	2	
200118	B0108A	JA8216A	1	
200117	B0108B	JA8216B	1	
200116	B0109A	JA8215A	1	
200115	B0109B	JA8215B	1	
200102	B0110A	B0521A	1	
200101	B0110B	B0516A	1	
200132	B0111A	JA8239B	1	
200131	B0111B	JA8240A	1	
200134	B0112A	JA8238B	1	
200133	B0112B	JA8238A	1	
200136	B0113A	JA8226B	1	
200135	B0113B	JA8226A	1	
200138	B0114A	JA8227B	1	
200137	B0114B	JA8227A	1	
200104	B0115A	A0431A	1	
200103	B0115B	A0432A	1	
200204	B0116A	B0227A	2	
200204	B0116A	A0225B	1	
200202	B0116B	A0226B	2	
200924	B0117A	B0626A	1	
200221	B0117B	A0223A	1	
200221	B0117B	B0202A	2	
200202	B0121A	A0226B	1	
200202	B0121A	B0224A	2	
200501	B0121B	B0203B	2	
200501	B0121B	A0217B	1	
200110	B0122A	B0134A	1	
200206	B0122B	B0228A	2	
200206	B0122B	A0225A	1	
100504	B0123A	A0222A	2	
100504	B0123A	B0323A	1	
100108	B0123B	A0128B	2	
100101	B0123B	B0323B	1	
200912	B0124A	B0324A	1	
200912	B0124A	B0632A	2	

TITLE		WL	DOCUMENT NO.	SHEET NO.	REV.
Logic Wirewrap - Applicable to Index and Sector in B Cable				7	N

SIGNAL NAME OR NUMBER IDENTIFICATION	ORIGIN	DESTINATION	Z LEVEL	NOTES
100406	B01248	B0324B	2	
200122	B0125A	JA8219A	1	
200121	B0125B	JA8219B	1	
200120	B0126A	JA8217A	1	
200119	B0126B	JA8217B	1	
200124	B0127A	JA8220A	1	
200123	B0127B	JA8220B	1	
200126	B0128A	JA8234A	1	
200125	B0128B	JA8233B	1	
200130	B0129A	JA8237A	1	
200129	B0129B	JA8236B	1	
200128	B0130A	JA8235A	1	
200127	B0130B	JA8235B	1	
100602	B0131A	B0331A	2	
100601	B0131B	B0331B	2	
200105	B0132A	JA8102A	1	
200107	B0132B	JA8104A	1	
200106	B0133B	JA8103A	1	
200110	B0134A	B0122A	1	
200221	B0202A	B0402A	1	
200221	B0202A	B0117B	2	
200222	B0202B	A0524B	1	
200217	B0203A	B0403A	1	
200217	B0203A	A0223B	2	
200501	B0203B	B0533A	1	
200501	B0203B	B0121B	2	
200225	B0204A	A0429A	1	
200224	B0204B	A0429B	1	
200257	B0205A	JA8223B	1	
200256	B0205B	JA8223A	1	
200255	B0206A	JA8224B	1	
200254	B0206B	JA8224A	1	
200253	B0207A	JA8203B	1	
200252	B0207B	JA8203A	1	
200251	B0208A	JA8214B	1	
200250	B0208B	JA8214A	1	
200245	B0209A	JA8212B	1	
200244	B0209B	JA8212A	1	
200243	B0210A	B1022A	2	
200243	B0210A	JA8213B	1	
200242	B0210B	JA8213A	1	
200242	B0210B	B1022B	2	
200249	B0211A	JA8202B	1	
200248	B0211B	JA8202A	1	
200247	B0212A	JA8201B	1	
200246	B0212B	JA8201A	1	
200241	B0213A	JA8211B	1	
200240	B0213B	JA8211A	1	
200239	B0214A	JA8210B	1	
200238	B0214B	JA8210A	1	
200237	B0215A	JA8209B	1	
200236	B0215B	JA8209A	1	

TITLE		WL	DOCUMENT NO.	SHEET NO.	REV.
Logic Wirewrap - Applicable to Index and Sector in B Cable				8	N

SIGNAL NAME OR NUMBER IDENTIFICATION	ORIGIN	DESTINATION	Z LEVEL	NOTES
200235	B0216A	JA8208B	1	
200234	B0216B	JA8208A	1	
200233	B0217A	JA8207B	1	
200232	B0217B	JA8207A	1	
200231	B0221A	JA8206B	1	
200230	B0221B	JA8206A	1	
200229	B0222A	JA8205B	1	
200228	B0222B	JA8205A	1	
200227	B0223A	JA8204B	1	
200226	B0223B	JA8204A	1	
200202	B0224A	B0121A	2	
200202	B0224A	B0424A	1	
200208	B0224B	B0424B	1	
200208	B0224B	A0224A	2	
200216	B0225A	B0425A	1	
200216	B0225A	A0226A	2	
200212	B0225B	A0229A	2	
200212	B0225B	B0425B	1	
200214	B0226A	B0426A	1	
200214	B0226A	A0227A	2	
200210	B0226B	A0228A	2	
200210	B0226B	B0426B	1	
200204	B0227A	B0427A	1	
200204	B0227A	B0116A	2	
200201	B0227B	B0616B	1	
200201	B0227B	A0413A	2	
200206	B0228A	B0428A	1	
200206	B0228A	B0122B	2	
200205	B0228B	A0822B	1	
200203	B0229A	A0413B	1	
200207	B0229B	A0821A	1	
200209	B0230A	A0412A	1	
200213	B0230B	B0812B	1	
200211	B0231A	B0103A	1	
200211	B0231A	A0613B	2	
200215	B0231B	A0604B	1	
200220	B0232A	A0232A	2	
200220	B0232A	B0432A	1	
200218	B0232B	A0224B	2	
200218	B0232B	B0432B	1	
200219	B0233A	A0603B	1	
200223	B0233B	A0230A	2	
200223	B0233B	B0433B	1	
300025	B0234A	JA8333A	2	
300025	B0234A	JA8233A	1	
200802	B0304A	B0813B	1	
200802	B0304A	B0104A	2	
200801	B0304B	B0104B	2	
200801	B0304B	B0821B	1	
200308	B0305A	JA8345A	1	
200307	B0305B	JA8345B	1	
200306	B0306A	JA8344A	1	

TITLE		WL	DOCUMENT NO.	SHEET NO.	REV.
Logic Wirewrap - Applicable to Index and Sector in B Cable				9	N

SIGNAL NAME OR NUMBER IDENTIFICATION	ORIGIN	DESTINATION	Z LEVEL	NOTES
200305	B0306B	JA8343B	1	
200622	B0307A	B0107A	2	
200622	B0307A	B0614B	1	
200915	B0307B	B0107B	2	
200915	B0307B	B0911A	1	
200312	B0308A	JA8316A	1	
200311	B0308B	JA8316B	1	
200310	B0309A	JA8315A	1	
200309	B0309B	JA8315B	1	
200302	B0310A	B0517B	1	
200301	B0310B	B0515B	1	
200326	B0311A	JA8339B	1	
200325	B0311B	JA8340A	1	
200328	B0312A	JA8338B	1	
200327	B0312B	JA8338A	1	
200330	B0313A	JA8326B	1	
200329	B0313B	JA8326A	1	
200332	B0314A	JA8327B	1	
200331	B0314B	JA8327A	1	
200304	B0315A	B0511A	1	
200303	B0315B	B0510B	1	
200504	B0321B	B1030A	1	
200504	B0321B	B0403B	2	
100504	B0323A	B0123A	1	
100101	B0323B	B0123B	1	
200912	B0324A	B0605B	2	
200912	B0324A	B0124A	1	
100406	B0324B	B0124B	2	
100406	B0324B	A0426B	1	
200316	B0325A	JA8319A	1	
200315	B0325B	JA8319B	1	
200314	B0326A	JA8317A	1	
200313	B0326B	JA8317B	1	
200318	B0327A	JA8320A	1	
200317	B0327B	JA8320B	1	
200320	B0328A	JA8334A	1	
200319	B0328B	JA8333B	1	
200324	B0329A	JA8337A	1	
200323	B0329B	JA8336B	1	
200322	B0330A	JA8335A	1	
200321	B0330B	JA8335B	1	
100602	B0331A	B0131A	2	
100602	B0331A	A0627B	1	
100601	B0331B	B0131B	2	
100601	B0331B	A0626B	1	
300026	B0334A	JA8234B	1	
300026	B0334A	JA8334B	2	
200221	B0402A	B0202A	1	
200401	B0402B	B0732B	1	
200217	B0403A	B0203A	1	
200217	B0403A	B0531A	2	
200504	B0403B	B0532A	1	

TITLE			DOCUMENT NO.	SHEET NO.	REV.
Logic Wirewrap - Applicable to Index and Sector in B Cable		WL		10	N

SIGNAL NAME OR NUMBER IDENTIFICATION	ORIGIN	DESTINATION	Z LEVEL	NOTES
200504	B0403B	B0321B	2	
200403	B0404A	B0503B	1	
200402	B0404B	B0510A	1	
200435	B0405A	JA8323B	1	
200434	B0405B	JA8323A	1	
200433	B0406A	JA8324B	1	
200432	B0406B	JA8324A	1	
200431	B0407A	JA8303B	1	
200430	B0407B	JA8303A	1	
200429	B0408A	JA8314B	1	
200428	B0408B	JA8314A	1	
200423	B0409A	JA8312B	1	
200422	B0409B	JA8312A	1	
200421	B0410A	JA8313B	1	
200421	B0410A	B1023A	2	
200420	B0410B	B1023B	2	
200420	B0410B	JA8313A	1	
200427	B0411A	JA8302B	1	
200426	B0411B	JA8302A	1	
200425	B0412A	JA8301B	1	
200424	B0412B	JA8301A	1	
200419	B0413A	JA8311B	1	
200418	B0413B	JA8311A	1	
200417	B0414A	JA8310B	1	
200416	B0414B	JA8310A	1	
200415	B0415A	JA8309B	1	
200414	B0415B	JA8309A	1	
200413	B0416A	JA8308B	1	
200412	B0416B	JA8308A	1	
200411	B0417A	JA8307B	1	
200410	B0417B	JA8307A	1	
200409	B0421A	JA8306B	1	
200408	B0421B	JA8306A	1	
200407	B0422A	JA8305B	1	
200406	B0422B	JA8305A	1	
200405	B0423A	JA8304B	1	
200404	B0423B	JA8304A	1	
200202	B0424A	B0631A	2	
200202	B0424A	B0224A	1	
200206	B0424B	B0628B	2	
200208	B0424B	B0224B	1	
200216	B0425A	B0225A	1	
200216	B0425A	B0626B	2	
200212	B0425B	B0624A	2	
200212	B0425B	B0225B	1	
200214	B0426A	B0622B	2	
200214	B0426A	B0226A	1	
200210	B0426B	B0629B	2	
200210	B0426B	B0226B	1	
200204	B0427A	B0227A	1	
200204	B0427A	B0633A	2	
200206	B0428A	B0228A	1	

TITLE		WL	DOCUMENT NO.	SHEET NO.	REV.
Logic Wirewrap - Applicable to Index and Sector in B Cable				11	Y

SIGNAL NAME OR NUMBER IDENTIFICATION	ORIGIN	DESTINATION	Z LEVEL	NOTES
200206	B0428A	B0630A	2	
200220	B0432A	B0232A	1	
200220	B0432A	B0606B	2	
200218	B0432B	B0232B	1	
200218	B0432B	B0621A	2	
200223	B0433B	B0233B	1	
200223	B0433B	B0502A	2	
300027	B0434A	JA8236A	1	
300027	B0434A	JA8336A	2	
200223	B0502A	B1009A	1	
200223	B0502A	B0433B	2	
200519	B0502B	B1025B	2	
200403	B0503B	B0404A	1	
200503	B0505A	JA8221A	1	
200502	B0505B	JA8221B	1	
200914	B0506A	B0932A	2	
201003	B0506B	B1027A	2	
201020	B0507A	B1010A	1	
200402	B0510A	B0404B	1	
200303	B0510B	B0315B	1	
200304	B0511A	B0315A	1	
100415	B0512A	A0430A	2	
100414	B0512B	A0431B	2	
100413	B0513A	A0427A	2	
100412	B0513B	A0428B	2	
100411	B0514A	A0410B	1	
200523	B0515A	B1030B	1	
200301	B0515B	B0310B	1	
200101	B0516A	B0110B	1	
200515	B0516B	B0723B	1	
200522	B0517A	B1027B	1	
200302	B0517B	B0310A	1	
200102	B0521A	B0110A	1	
201001	B0521B	B1016B	1	
200516	B0522A	B0710B	1	
201002	B0523B	B1002A	1	
200514	B0524A	JA8322B	1	
200513	B0524B	JA8322A	1	
200508	B0525A	JA8321A	1	
200507	B0525B	JA8321B	1	
200506	B0526A	JA8328A	1	
200505	B0526B	JA8328B	1	
200512	B0527A	JA8342A	1	
200511	B0527B	JA8342B	1	
200510	B0529A	JA8341B	1	
200509	B0529B	JA8341A	1	
200703	B0530A	B0709B	1	
100403	B0530B	B0707B	2	
100403	B0530B	A0407A	1	
200217	B0531A	B0625A	1	
200217	B0531A	B0403A	2	
200521	B0531B	B1010B	1	
200504	B0532A	A0221B	2	

TITLE		WL	DOCUMENT NO.	SHEET NO.	REV.
Logic Wirewrap - Applicable to Index and Sector in B Cable				12	N

SIGNAL NAME OR NUMBER IDENTIFICATION	ORIGIN	DESTINATION	Z LEVEL	NOTES
200504	B0532A	B0403B	1	
101006	B0532B	B1008B	2	
101006	B0532B	A1013A	1	
200501	B0533A	B0203B	1	
200520	B0533B	B0708B	1	
300028	B0534A	JA8337B	2	
300028	B0534A	JA8237B	1	
200610	B0602A	A0711B	1	
200611	B0602B	A0725B	1	
200612	B0603A	A0712B	1	
200908	B0603B	B0914A	1	
200613	B0604A	A0713A	1	
200608	B0604B	A0727A	1	
200920	B0605A	B0910B	1	
200912	B0605B	B0903A	1	
200912	B0605B	B0324A	2	
200614	B0606A	B0917B	1	
200220	B0606B	B0432A	2	
200606	B0607A	B0827B	1	
200615	B0607B	B0922B	1	
200618	B0609A	A0717A	1	
200617	B0609B	A0715A	1	
200616	B0610A	A0713B	1	
200619	B0611B	A0716A	1	
200601	B0613A	JA8110A	1	
200604	B0613B	B0904A	1	
200607	B0614A	B0914B	1	
200622	B0614B	B0307A	1	
100404	B0615A	B0933B	1	
200620	B0616A	JA8101B	1	
200201	B0616B	B0712B	2	
200201	B0616B	B0227B	1	
200609	B0617B	A0926B	1	
200218	B0621A	B0432B	2	
200218	B0621A	B0832A	1	
200214	B0622B	B0426A	2	
200214	B0622B	B0826B	1	
200602	B0623B	JA8111A	1	
200212	B0624A	B0425B	2	
200212	B0624A	B0826A	1	
200603	B0624B	JA8112A	1	
200217	B0625A	B0833B	2	
200217	B0625A	B0531A	1	
200916	B0625B	B0915B	1	
200924	B0626A	B0117A	1	
200924	B0626A	B0817A	2	
200216	B0626B	B0425A	2	
200216	B0626B	B0811B	1	
200208	B0628B	B0823B	1	
200208	B0628B	B0424B	2	
200210	B0629B	B0426B	2	
200210	B0629B	B0822A	1	

TITLE				WL	DOCUMENT NO.	SHEET NO.	REV.
Logic Wirewrap - Applicable to Index and Sector in B Cable						13	N

SIGNAL NAME OR NUMBER IDENTIFICATION	ORIGIN	DESTINATION	Z LEVEL	NOTES
200206	B0630A	B0428A	2	
200206	B0630A	B0823A	1	
200202	B0631A	B0424A	2	
200202	B0631A	B0832B	1	
200912	B0632A	B0124A	2	
200605	B0632B	B0910A	1	
200204	B0633A	B0825A	1	
200204	B0633A	B0427A	2	
200621	B0633B	A0217A	1	
300029	B0634A	JA8239A	1	
300029	B0634A	JA8339A	2	
100403	B0707B	B0530B	2	
100403	B0707B	A0528B	1	
200520	B0708B	B0533B	1	
100107	B0709A	A0130B	1	
200703	B0709B	B0530A	1	
200516	B0710B	B0522A	1	
200201	B0712B	B0616B	2	
200515	B0723B	B0516B	1	
200211	B0726B	B0103A	2	
200701	B0729A	JA8108B	1	
200702	B0729B	JA8109B	1	
200401	B0732B	B0402B	1	
300030	B0734A	JA8340B	2	
300030	B0734A	JA8240B	1	
200812	B0801A	B0811A	1	
100307	B0804A	A0311B	1	
200921	B0804B	B0921B	1	
200921	B0804B	A1017B	2	
200813	B0805A	B0814A	1	
100306	B0805B	A0332A	1	
200807	B0806A	B0911B	1	
200808	B0806B	B0924A	1	
200805	B0807A	B0932B	1	
200810	B0807B	B0925B	1	
100802	B0810A	A0809B	1	
200804	B0810B	A0814B	1	
200812	B0811A	B0801A	1	
200216	B0811B	B0626B	1	
200926	B0812A	A0327B	2	
200926	B0812A	B0913B	1	
200213	B0812B	B0927A	2	
200213	B0812B	B0230B	1	
200814	B0813A	B0815B	2	
200802	B0813B	B0304A	1	
200813	B0814A	B0805A	1	
200813	B0814A	B0814B	2	
200813	B0814B	B0825B	1	
200813	B0814B	B0814A	2	
100104	B0815A	A0126B	1	
200814	B0815B	B0813A	2	
200814	B0815B	B0824B	1	

TITLE		DOCUMENT NO.	SHEET NO.	REV.
Logic Wirewrap - Applicable to Index and Sector in B Cable	WL		14	N

SIGNAL NAME OR NUMBER IDENTIFICATION	ORIGIN	DESTINATION	Z LEVEL	NOTES
100801	B0816A	A0808A	1	
200806	B0816B	B0902A	1	
200924	B0817A	B0626A	2	
200924	B0817A	B0906B	1	
200919	B0817B	A0425B	2	
200919	B0817B	B0907B	1	
200809	B0821A	B0917A	1	
200801	B0821B	B0304B	1	
200210	B0822A	B0629B	1	
100305	B0822B	A0333A	2	
200206	B0823A	B0630A	1	
200208	B0823B	B0628B	1	
200814	B0824A	B0824B	2	
200814	B0824A	B0834A	1	
200814	B0824B	B0815B	1	
200814	B0824B	B0824A	2	
200204	B0825A	B0633A	1	
200813	B0825B	B0814B	1	
200813	B0825B	B0829A	2	
200212	B0826A	B0624A	1	
200214	B0826B	B0622B	1	
200803	B0827A	B0933A	1	
200606	B0827B	B0607A	1	
200606	B0827B	B0902B	2	
100805	B0828B	A0823A	1	
200813	B0829A	B0825B	2	
200813	B0829A	B0829B	1	
200813	B0829B	B0829A	1	
200813	B0829B	B0830A	2	
200813	B0830A	B0829B	2	
100105	B0831A	A0113B	1	
200218	B0832A	B0621A	1	
200202	B0832B	B0631A	1	
200811	B0833A	B0929A	1	
200217	B0833B	B1003A	1	
200217	B0833B	B0625A	2	
200814	B0834A	JA8243A	2	
200814	B0834A	B0824A	1	
200806	B0902A	B0816B	1	
200606	B0902B	B0827B	2	
200606	B0902B	B0905B	1	
200912	B0903A	B0605B	1	
200912	B0903A	A0832A	2	
200904	B0903B	A0410A	1	
200604	B0904A	B0613B	1	
200903	B0904B	A0816A	1	
100807	B0905A	A0812B	1	
200606	B0905B	B0902B	1	
200906	B0906A	A0823B	1	
200924	B0906B	B0817A	1	
200924	B0906B	A0810B	2	
200902	B0907A	A0923B	1	

TITLE		WL	DOCUMENT NO.	SHEET NO.	REV.
Logic Wirewrap - Applicable to Index and Sector in B Cable				15	N

SIGNAL NAME OR NUMBER IDENTIFICATION	ORIGIN	DESTINATION	Z LEVEL	NOTES
200919	B0907B	B0817B	1	
200901	B0908A	A0922B	1	
200907	B0909A	B0916A	2	
200605	B0910A	B0632B	1	
200920	B0910B	B0605A	1	
200915	B0911A	B0307B	1	
200807	B0911B	B0806A	1	
101004	B0912A	A1014B	1	
200923	B0912B	A0708A	1	
200911	B0913A	A0710A	1	
200926	B0913B	A0925B	2	
200926	B0913B	B0812A	1	
200908	B0914A	B0603B	1	
200908	B0914A	A0812A	2	
200607	B0914B	B0614A	1	
100901	B0915A	A0924B	2	
200916	B0915B	B0625B	1	
200907	B0916A	B0909A	2	
200907	B0916A	A0717B	1	
200905	B0916B	A0722B	1	
200809	B0917A	B0821A	1	
200614	B0917B	B0606A	1	
200921	B0921B	A0916B	2	
200921	B0921B	B0804B	1	
200910	B0922A	A0813A	1	
200615	B0922B	B0607B	1	
200917	B0923A	B0934A	1	
101003	B0923B	A1017A	1	
200808	B0924A	B0806B	1	
200927	B0924B	JA8004A	1	
200922	B0925A	A0915B	1	
200810	B0925B	B0807B	1	
200925	B0926A	A0825B	1	
101001	B0926B	A1022A	1	
200213	B0927A	B0812B	2	
100302	B0927B	A0308B	1	
100301	B0928B	A0307B	1	
200811	B0929A	B0833A	1	
200922	B0929B	A0707B	1	
200913	B0930A	A0813B	1	
200909	B0930B	A0927B	1	
200918	B0931A	A0702A	1	
100402	B0931B	A0414A	1	
200914	B0932A	B0506A	2	
200914	B0932A	B1009B	1	
200805	B0932B	B0807A	1	
200803	B0933A	B0827A	1	
100404	B0933B	B0615A	1	
100404	B0933B	A0707A	2	
200917	B0934A	B0923A	1	
200917	B0934A	JA8343A	2	
201002	B1002A	B0523B	1	

TITLE		WL	DOCUMENT NO.	SHEET NO.	REV.
Logic Wirewrap - Applicable to Index and Sector in B Cable				16	Y

SIGNAL NAME OR NUMBER IDENTIFICATION	ORIGIN	DESTINATION	Z LEVEL	NOTES
200217	B1003A	B0833B	1	
201005	B1007A	JA8222B	1	
201006	B1007B	JA8222A	1	
201004	B1008A	A0811B	1	
101006	B1008B	B0532B	2	
200223	B1009A	B0502A	1	
200914	B1009B	B0932A	1	
201020	B1010A	B0507A	1	
200521	B1010B	B0531B	1	
100411	B1015B	A0410B	2	
100403	B1016A	A1015B	1	
201001	B1016B	B0521B	1	
200243	B1022A	B0210A	2	
200242	B1022B	B0210B	2	
200421	B1023A	B0410A	2	
200420	B1023B	B0410B	2	
200519	B1025B	B0502B	2	
200501	B1026A	A0217B	2	
201003	B1027A	B0506B	2	
200522	B1027B	B0517A	1	
201008	B1028A	JA8242A	1	
201007	B1028B	JA8242B	1	
201010	B1029A	JA8241B	1	
201009	B1029B	JA8241A	1	
200504	B1030A	B0321B	1	
200523	B1030B	B0515A	1	
201012	B1031A	JA8228A	1	
201011	B1031B	JA8229B	1	
300031	B1034A	JA8244B	1	
300031	B1034A	JA8344B	2	
100404	JA8001A	A1012A	1	
100404	JA8001A	A0411B	2	
100410	JA8002B	A0409A	1	
101020	JA8003A	A0133B	1	
101017	JA8003B	A1028B	1	
200927	JA8004A	A1030B	2	
200927	JA8004A	B0924B	1	
101016	JA8004B	A1029B	1	
100408	JA8005A	A1026B	1	
101013	JA8005B	A1028A	1	
101015	JA8006A	A1026A	1	
101014	JA8006B	A1029A	1	
100416	JA8007A	A0101A	1	
100416	JA8007B	A0101A	2	
300016	JA8008A	JA8102B	1	
300017	JA8008B	JA8112B	1	
100409	JA8009B	A1012B	1	
101018	JA8010A	A1027A	1	
101019	JA8010B	A1034A	1	
100412	JA8011A	A0428B	1	
100414	JA8011B	A0431B	1	
100413	JA8012A	A0427A	1	
100405	JA8013A	A0412B	1	

TITLE		WL	DOCUMENT NO.	SHEET NO.	REV.
Logic Wirewrap - Applicable to Index and Sector in B Cable				17	N

SIGNAL NAME OR NUMBER IDENTIFICATION	ORIGIN	DESTINATION	Z LEVEL	NOTES
100415	JA8014A	A0430A	1	
100417	JA8014B	A0134B	1	
300013	JA8101A	A0601A	1	
200620	JA8101B	B0616A	1	
200105	JA8102A	B0132A	1	
300016	JA8102B	JA8008A	1	
200106	JA8103A	B0133B	1	
300019	JA8103B	A0601B	1	
200107	JA8104A	B0132B	1	
100803	JA8104B	A0825A	1	
300006	JA8105A	A1001A	1	
300004	JA8105B	A0521B	1	
300005	JA8106A	A0522B	1	
300002	JA8106B	A0508B	1	
300015	JA8107A	A0801A	1	
300003	JA8107B	A0507B	1	
300001	JA8108A	A0414B	1	
200701	JA8108B	B0729A	1	
300007	JA8109A	A0409B	1	
200702	JA8109B	B0729B	1	
200601	JA8110A	B0613A	1	
200201	JA8110B	A0413A	1	
200602	JA8111A	B0623B	1	
300020	JA8111B	A0634B	1	
200603	JA8112A	B0624B	1	
300017	JA8112B	JA8008B	1	
101005	JA8113A	A1002A	1	
300021	JA8113B	A0633B	1	
300014	JA8114A	A0701A	1	
300018	JA8114B	A1032B	1	
300018	JA8114B	A0932B	2	
200246	JA8201A	B0212B	1	
200247	JA8201B	B0212A	1	
200248	JA8202A	B0211B	1	
200249	JA8202B	B0211A	1	
200252	JA8203A	B0207B	1	
200253	JA8203B	B0207A	1	
200226	JA8204A	B0223B	1	
200227	JA8204B	B0223A	1	
200228	JA8205A	B0222B	1	
200229	JA8205B	B0222A	1	
200230	JA8206A	B0221B	1	
200231	JA8206B	B0221A	1	
200232	JA8207A	B0217B	1	
200233	JA8207B	B0217A	1	
200234	JA8208A	B0216B	1	
200235	JA8208B	B0216A	1	
200236	JA8209A	B0215B	1	
200237	JA8209B	B0215A	1	
200238	JA8210A	B0214B	1	
200239	JA8210B	B0214A	1	
200240	JA8211A	B0213B	1	

TITLE				DOCUMENT NO.	SHEET NO.	REV.
Logic Wirewrap - Applicable to Index and Sector in B Cable			WL		18	N

SIGNAL NAME OR NUMBER IDENTIFICATION	ORIGIN	DESTINATION	Z LEVEL	NOTES
200241	JA82118	B0213A	1	
200244	JA8212A	B0209B	1	
200245	JA82128	B0209A	1	
200242	JA8213A	B0210B	1	
200243	JA82138	B0210A	1	
200250	JA8214A	B0208B	1	
200251	JA82148	B0208A	1	
200116	JA8215A	B0109A	1	
200115	JA82158	B0109B	1	
200118	JA8216A	B0108A	1	
200117	JA82168	B0108B	1	
200120	JA8217A	B0126A	1	
200119	JA82178	B0126B	1	
200122	JA8219A	B0125A	1	
200121	JA82198	B0125B	1	
200124	JA8220A	B0127A	1	
200123	JA82208	B0127B	1	
200503	JA8221A	B0505A	1	
200502	JA82218	B0505B	1	
201006	JA8222A	B1007B	1	
201005	JA82228	B1007A	1	
200256	JA8223A	B0205B	1	
200257	JA82238	B0205A	1	
200254	JA8224A	B0206B	1	
200255	JA82248	B0206A	1	
200135	JA8226A	B0113B	1	
200136	JA82268	B0113A	1	
200137	JA8227A	B0114B	1	
200138	JA82278	B0114A	1	
201012	JA8228A	B1031A	1	
201011	JA82288	B1031B	1	
101008	JA8229A	A1003B	1	
101009	JA82298	A1003A	1	
101007	JA8231A	A1004B	1	
300025	JA8233A	B0234A	1	
200125	JA82338	B0128B	1	
200126	JA8234A	B0128A	1	
300026	JA82348	B0334A	1	
200128	JA8235A	B0130A	1	
200127	JA82358	B0130B	1	
300027	JA8236A	B0434A	1	
200129	JA82368	B0129B	1	
200130	JA8237A	B0129A	1	
300028	JA82378	B0534A	1	
200133	JA8238A	B0112B	1	
200134	JA82388	B0112A	1	
300029	JA8239A	B0634A	1	
200132	JA82398	B0111A	1	
200131	JA8240A	B0111B	1	
300030	JA82408	B0734A	1	
201009	JA8241A	B1029B	1	
201010	JA82418	B1029A	1	

TITLE		WL	DOCUMENT NO.	SHEET NO.	REV.
Logic Wirewrap - Applicable to Index and Sector in B Cable				19	N

SIGNAL NAME OR NUMBER IDENTIFICATION	ORIGIN	DESTINATION	Z LEVEL	NOTES
201008	JA8242A	B1028A	1	
201007	JA8242B	B1028B	1	
200814	JA8243A	B0834A	?	
200111	JA8243B	B0106B	1	
200112	JA8244A	B0106A	1	
300031	JA8244B	B1034A	1	
200114	JA8245A	B0105A	1	
200113	JA8245B	B0105B	1	
200424	JA8301A	B0412B	1	
200425	JA8301B	B0412A	1	
200426	JA8302A	B0411B	1	
200427	JA8302B	B0411A	1	
200430	JA8303A	B0407B	1	
200431	JA8303B	B0407A	1	
200404	JA8304A	B0423B	1	
200405	JA8304B	B0423A	1	
200406	JA8305A	B0422B	1	
200407	JA8305B	B0422A	1	
200408	JA8306A	B0421B	1	
200409	JA8306B	B0421A	1	
200410	JA8307A	B0417B	1	
200411	JA8307B	B0417A	1	
200412	JA8308A	B0416B	1	
200413	JA8308B	B0416A	1	
200414	JA8309A	B0415B	1	
200415	JA8309B	B0415A	1	
200416	JA8310A	B0414B	1	
200417	JA8310B	B0414A	1	
200418	JA8311A	B0413B	1	
200419	JA8311B	B0413A	1	
200422	JA8312A	B0409B	1	
200423	JA8312B	B0409A	1	
200420	JA8313A	B0410B	1	
200421	JA8313B	B0410A	1	
200428	JA8314A	B0408B	1	
200429	JA8314B	B0408A	1	
200310	JA8315A	B0309A	1	
200309	JA8315B	B0309B	1	
200312	JA8316A	B0308A	1	
200311	JA8316B	B0308B	1	
200314	JA8317A	B0326A	1	
200313	JA8317B	B0326B	1	
200316	JA8319A	B0325A	1	
200315	JA8319B	B0325B	1	
200318	JA8320A	B0327A	1	
200317	JA8320B	B0327B	1	
200508	JA8321A	B0525A	1	
200507	JA8321B	B0525B	1	
200513	JA8322A	B0524B	1	
200514	JA8322B	B0524A	1	
200434	JA8323A	B0405B	1	
200435	JA8323B	B0405A	1	

TITLE		WL	DOCUMENT NO.	SHEET NO.	REV.
Logic Wirewrap - Applicable to Index and Sector in B Cable				20	N

SIGNAL NAME OR NUMBER IDENTIFICATION	ORIGIN	DESTINATION	Z LEVEL	NOTES
200432	JA8324A	B0406B	1	
200433	JA8324B	B0406A	1	
200329	JA8326A	B0313B	1	
200330	JA8326B	B0313A	1	
200331	JA8327A	B0314B	1	
200332	JA8327B	B0314A	1	
200506	JA8328A	B0526A	1	
200505	JA8328B	B0526B	1	
101008	JA8329A	A1003B	2	
101009	JA8329B	A1003A	2	
101007	JA8331A	A1004B	2	
300025	JA8333A	B0234A	2	
200319	JA8333B	B0328B	1	
200320	JA8334A	B0328A	1	
300026	JA8334B	B0334A	2	
200322	JA8335A	B0330A	1	
200321	JA8335B	B0330B	1	
300027	JA8336A	B0434A	2	
200323	JA8336B	B0329B	1	
200324	JA8337A	B0329A	1	
300028	JA8337B	B0534A	2	
200327	JA8338A	B0312B	1	
200328	JA8338B	B0312A	1	
300029	JA8339A	B0634A	2	
200326	JA8339B	B0311A	1	
200325	JA8340A	B0311B	1	
300030	JA8340B	B0734A	2	
200509	JA8341A	B0529B	1	
200510	JA8341B	B0529A	1	
200512	JA8342A	B0527A	1	
200511	JA8342B	B0527B	1	
200917	JA8343A	B0934A	2	
200305	JA8343B	B0306B	1	
200306	JA8344A	B0306A	1	
300031	JA8344B	B1034A	2	
200308	JA8345A	B0305A	1	
200307	JA8345B	B0305B	1	

INDEX AND SECTOR IN A AND B CABLE

TITLE	WL	DOCUMENT NO.	SHEET NO.	REV.
Logic Wirewrap - Applicable to Index and Sector in A and B Cable		77568147/50	1 of 21	AT/AV

SIGNAL NAME OR NUMBER IDENTIFICATION	ORIGIN	DESTINATION	Z LEVEL	81546000(BK5C6D) NOTES	A
	A0101A	JA8007B	2		
	A0101A	JA8007A	1		
	A0101B	A0121B	1		
	A0104B	A0333A	1		
	A0112B	A0221A	1		
	A0112B	A0127B	2		
	A0113B	B0831A	1		
	A0114B	A0234B	1		
	A0121B	A0101B	1		
	A0122B	A0312B	1		
	A0123B	A0623B	1		
	A0124B	A0624B	1		
	A0126B	B0815A	1		
	A0127B	A0112B	2		
	A0128B	B0123B	2		
	A0130B	B0709A	1		
	A0133B	JA8003A	1	All units except BK5C6D	
	A0134B	JA8014B	1		
	A0213B	A0323B	1		
	A0214B	A1012B	2		
	A0215B	A0325B	1		
	A0216A	B0104A	1		
	A0216B	A0231A	2	All units except BK5C6D	
	A0217A	B0433B	1		
	A0217B	B1026A	2		
	A0217B	B0121B	1		
	A0221A	A0112B	1		
	A0221B	B0532A	2		
	A0222A	B0123A	2		
	A0222A	A0532B	1		
	A0222B	A0234A	2		
	A0223A	B0117B	1		
	A0223B	B0203A	2		
	A0224A	B0224B	2		
	A0224B	B0232B	2		
	A0225A	B0122B	1		
	A0225B	B0116A	1		
	A0226A	B0225A	2		
	A0226B	B0121A	1		
	A0226B	B0116B	2		
	A0227A	B0226A	2		
	A0228A	B0226B	2		
	A0229A	B0225B	2		
	A0230A	B0233B	2		
	A0231A	A0216B	2		
	A0231A	A0234A	1		
	A0232A	B0232A	2		
	A0234A	A0222B	2		
	A0234A	A0231A	1		
	A0234B	A0114B	1		
	A0307B	B0928B	1		

KOR-0542B-2

TITLE Logic Wirewrap - Applicable to Index and Sector in A and B Cable	WL	DOCUMENT NO.	SHEET NO. 2	REV. AT/AV

SIGNAL NAME OR NUMBER IDENTIFICATION	ORIGIN	DESTINATION	Z LEVEL	NOTES
	A03088	B09278	1	
	A03098	A08268	1	
	A03118	B0804A	1	
	A03128	A01228	1	
	A03238	A02138	1	
	A03258	A02158	1	
	A03278	B0612A	2	
	A0332A	B0805B	1	
	A0333A	B08228	2	
	A0333A	A01048	1	
	A04038	A09038	1	
	A0407A	B05308	1	
	A0407A	A10158	2	
	A0408A	B01028	1	
	A0409A	JA80028	1	
	A04098	JA8109A	1	
	A0410A	B0903B	1	
	A0410B	B10158	2	
	A04108	B0514A	1	
	A0411B	A0707A	1	
	A0411B	JA8001A	2	
	A0412A	B0230A	1	
	A0412B	A10278	2	
	A0412B	JA8013A	1	
	A0413A	JA81108	1	
	A0413A	B02278	2	
	A0413B	A05318	2	
	A0413B	B0229A	1	
	A0414A	B0931B	1	
	A0414B	JA8108A	1	
	A0415B	A10238	1	
	A0416B	A1021A	1	
	A0424B	A1021B	1	
	A0425B	B08178	2	
	A0426A	A05258	1	
	A0426B	B03248	1	
	A0427A	B0513A	2	
	A0427A	JA8012A	1	
	A0428B	B0513B	2	
	A0428B	JA8011A	1	
	A0429A	B0204A	1	
	A0429B	B0204B	1	
	A0430A	JA8014A	1	
	A0430A	B0512A	2	
	A0430B	A0811A	1	
	A0431A	B0115A	1	
	A0431B	JA8011B	1	
	A0431B	B0512B	2	
	A0432A	B01158	1	
	A0432B	A0932B	1	
	A0433A	A05238	1	
	A0503B	A06108	1	

KOR-0542B-2

TITLE Logic Wirewrap - Applicable to Index and Sector in A and B Cable	WL	DOCUMENT NO.	SHEET NO. 3	REV. AT/AV

SIGNAL NAME OR NUMBER IDENTIFICATION	ORIGIN	DESTINATION	Z LEVEL	NOTES
	A0504B	A0609B	1	
	A0507B	JA81078	1	
	A0508B	JA81068	1	
	A0521B	JA8105B	1	
	A0522B	JA8106A	1	
	A0523B	A0811B	2	
	A0523B	A0433A	1	
	A0524B	B0202B	1	
	A0525B	A0426A	1	
	A0527B	A0824A	2	
	A0528B	B0707B	1	
	A0530B	A0622B	1	
	A0531B	A0413B	2	
	A0531B	A0612B	1	
	A0532B	A0222A	1	
	A0601A	JA8101A	1	
	A0601B	JA8103B	1	
	A0603B	B0233A	1	
	A0604B	B0231B	1	
	A0609B	A0504B	1	
	A0610B	A0503B	1	
	A0612B	A0531B	1	
	A0612B	A0824B	2	
	A0613B	B0231A	2	
	A0613B	A0824A	1	
	A0622B	A0530B	1	
	A0623B	A0123B	1	
	A0624B	A0124B	1	
	A0626B	B0331B	1	
	A0627B	B0331A	1	
	A0633B	JA8113B	1	
	A0634B	JA8111B	1	
	A0701A	JA8114A	1	
	A0702A	B0931A	1	
	A0707A	B0933B	2	
	A0707A	A0411B	1	
	A0707B	B0929B	1	
	A0708A	B0912B	1	
	A0710A	B0913A	1	
	A0711B	B0602A	1	
	A0712B	B0603A	1	
	A0713A	B0604A	1	
	A0713B	B0610A	1	
	A0715A	B0609B	1	
	A0715B	A0826A	2	
	A0716A	B0611B	1	
	A0716B	A0923B	2	
	A0717A	B0609A	1	
	A0717B	B0916A	1	
	A0721B	A0922B	2	
	A0722B	B0916B	1	
	A0723B	A0809A	1	

KOR-0542B-2

TITLE	WL	DOCUMENT NO.	SHEET NO.	REV.
Logic Wirewrap - Applicable to Index and Sector in A and B Cable			4	AT/AV

SIGNAL NAME OR NUMBER IDENTIFICATION	ORIGIN	DESTINATION	Z LEVEL	NOTES
	A07258	B06028	1	
	A07268	A09288	1	
	A0727A	B06048	1	
	A07278	A08088	1	
	A07288	A09128	1	
	A07308	A0802A	1	
	A0801A	JA8107A	1	
	A0802A	A07308	1	
	A0808A	B0816A	1	
	A0808B	A07278	1	
	A0809A	A07238	1	
	A0809B	B0810A	1	
	A0810B	B09068	2	
	A0811A	A04308	1	
	A0811B	AJ523B	2	
	A0811B	B1008A	1	
	AJ812A	B0914A	2	
	A0812B	B0905A	1	
	A0813A	B0922A	1	
	A0813B	B0930A	1	
	AJ814B	B0810B	1	
	A0816A	B0904B	1	
	A0821A	B02298	1	
	A0822A	A0927A	1	
	AJ822B	B0228B	1	
	A0823A	B0828B	1	
	AJ823B	B0906A	1	
	A0824A	AJ613B	1	
	A0824A	A0527B	2	
	A0824B	A0612B	2	
	A0825A	JA8104B	1	
	AJ825B	B0926A	1	
	AJ826A	A0715B	2	
	A0826A	A0906A	1	
	A0826B	AJ309B	1	
	A0832A	B0903A	2	
	A0833A	AJ924B	1	
	A0902A	A1002B	2	
	A0902B	A1002B	1	
	A0903A	A0904A	1	
	A0903A	A0903B	2	
	A0903B	A0903A	2	
	AJ903B	A04038	1	
	A0904A	A0903A	1	
	A0904A	A0904B	2	
	A0904B	A0904A	2	
	A0906A	A0826A	1	
	A0912B	A0728B	1	
	A0915B	B0925A	1	
	AJ916B	B0921B	2	
	A0922B	AJ721B	2	
	A0922B	BJ908A	1	

KOR-0542B-2

TITLE	WL	DOCUMENT NO.	SHEET NO.	REV.
Logic Wirewrap - Applicable to Index and Sector in A and B Cable			5	AT/AV

SIGNAL NAME OR NUMBER IDENTIFICATION	ORIGIN	DESTINATION	Z LEVEL	NOTES
	A0923B	A0716B	2	
	A0923B	B0907A	1	
	A0924B	A0833A	1	
	A0924B	B0915A	2	
	A0925B	B0913B	2	
	A0926B	B0617B	1	
	A0927A	A0822A	1	
	A0927B	B0930B	1	
	A0928B	A0726B	1	
	A0931A	A0931B	2	
	A0931A	A0932A	1	
	A0931B	A0931A	2	
	A0932A	A1032B	2	
	A0932A	A0931A	1	
	A0932B	JA8114B	2	
	A0932B	A0432B	1	
	A0933A	A1033B	2	
	A0933A	B1033B	1	BK5C6D ONLY
	A0933B	A1033B	1	
	A1001A	JA8105A	1	
	A1002A	JA8113A	1	
	A1002B	A0902A	2	
	A1002B	A0902B	1	
	A1003A	JA8229B	1	
	A1003A	JA8329B	2	
	A1003B	JA8329A	2	
	A1003B	JA8229A	1	
	A1004B	JA8331A	2	
	A1004B	JA8231A	1	
	A1005B	A1023B	2	
	A1012A	JA8001A	1	
	A1012B	A0214B	2	
	A1012B	JA8009B	1	
	A1013A	B0532B	1	
	A1014B	B0912A	1	
	A1015B	A0407A	2	
	A1015B	B1016A	1	
	A1017A	B0923B	1	
	A1017B	B0804B	2	
	A1021A	A0416B	1	
	A1021B	A0424B	1	
	A1022A	B0926B	1	
	A1023B	A1005B	2	
	A1023B	A0415B	1	
	A1026A	JA8006A	1	
	A1026B	JA8005A	1	
	A1027A	JA8010A	1	
	A1027A	B1033A	2	BK5C6D ONLY
	A1027B	A0412B	2	
	A1028A	JA8005B	1	
	A1028B	JA8003B	1	All units except BK5C6D
	A1029A	JA8006B	1	
	A1029B	JA8004B	1	
	A1030B	JA8004A	2	

KOR-0542B-2

TITLE Logic Wirewrap - Applicable to Index and Sector in A and B Cable	WL	DOCUMENT NO.	SHEET NO. 6	REV. AT/AV

SIGNAL NAME OR NUMBER IDENTIFICATION	ORIGIN	DESTINATION	Z LEVEL	NOTES
	A10328	JA8114B	1	
	A10328	A0932A	2	
	A10338	A0933A	2	
	A1033B	A09338	1	
	A1034A	JA80108	1	
	B0102B	A0408A	1	
	B0103A	B0231A	1	
	B0103A	B07268	2	
	B0104A	B0304A	2	
	B0104A	A0216A	1	
	B0104B	B0304B	2	
	B0105A	JA8225A	1	
	B0105B	JA8225B	1	
	B0106A	JA8218A	1	
	B0106B	JA8218B	1	
	B0107A	B0307A	2	
	B0107B	B0307B	2	
	B0108A	JA8215A	1	
	B0108B	JA8216B	1	
	B0109A	JA8215A	1	
	B0109B	JA8215B	1	
	B0110A	B0521A	1	
	B0101A	JA8230A	1	Used on BK5A7V/W & BK5C4C/D only
	B0110B	B0516A	1	
	B0111A	JA8239B	1	
	B0111B	JA8240A	1	
	B0112A	JA8238B	1	
	B0112B	JA8238A	1	
	B0113A	JA8226B	1	
	B0113B	JA8226A	1	
	B0114A	JA8227B	1	
	B0114B	JA8227A	1	
	B0115A	A0431A	1	
	B0115B	A0432A	1	
	B0116A	A0225B	1	
	B0116A	B0227A	2	
	B0116B	A0226B	2	
	B0117A	B0626A	1	
	B0117B	A0223A	1	
	B0117B	B0202A	2	
	B0121A	A0226B	1	
	B0121A	B0224A	2	
	B0121B	A0217B	1	
	B0121B	B0203B	2	
	B0122A	B0134A	1	
	B0122B	A0225A	1	
	B0122B	B0228A	2	
	B0123A	A0222A	2	
	B0123A	B0323A	1	
	B0123B	A0128B	2	
	B0123B	B0323B	1	
	B0124A	B0324A	1	
	B0124A	B0632A	2	

KOR-0542B-2

TITLE Logic Wirewrap - Applicable to Index and Sector in A and B Cable	WL	DOCUMENT NO.	SHEET NO. 7	REV. AT/AV

SIGNAL NAME OR NUMBER IDENTIFICATION	ORIGIN	DESTINATION	Z LEVEL	NOTES
	B0124B	B0324B	2	
	B0125A	JA8219A	1	
	B0125B	JA8219B	1	
	B0126A	JA8217A	1	
	B0126B	JA8217B	1	
	B0127A	JA8220A	1	
	B0127B	JA8220B	1	
	B0128A	JA8234A	1	
	B0128B	JA8233B	1	
	B0129A	JA8237A	1	
	B0129B	JA8236B	1	
	B0130A	JA8235A	1	
	B0130B	JA8235B	1	
	B0131A	B0331A	2	
	B0131B	B0331B	2	
	B0132A	JA8102A	1	
	B0132B	JA8104A	1	
	B0133B	JA8103A	1	
	B0134A	B0122A	1	
	B0134A	JA8230A	2	Used on BK5A7V/W & BK5C4C/D only
	B0201A	JA8230B	1	Used on BK5A7V/W & BK5C4C/D only
	B0202A	B0402A	1	
	B0202A	B0117B	2	
	B0202B	A05248	1	
	B0203A	B0403A	1	
	B0203A	A0223B	2	
	B0203B	B0121B	2	
	B0203B	B0533A	1	
	B0204A	A0429A	1	
	B0204B	A0429B	1	
	B0205A	JA8223B	1	
	B0205B	JA8223A	1	
	B0206A	JA8224B	1	
	B0206B	JA8224A	1	
	B0207A	JA8203B	1	
	B0207B	JA8203A	1	
	B0208A	JA8214B	1	
	B0208B	JA8214A	1	
	B0209A	JA8212B	1	
	B0209B	JA8212A	1	
	B0210A	B1022A	2	
	B0210A	JA8213B	1	
	B0210B	B1022B	2	
	B0210B	JA8213A	1	
	B0211A	JA8202B	1	
	B0211B	JA8202A	1	
	B0212A	JA8201B	1	
	B0212B	JA8201A	1	
	B0213A	JA8211B	1	
	B0213B	JA8211A	1	
	B0214A	JA8210B	1	
	B0214B	JA8210A	1	
	B0215A	JA8209B	1	
	B0215B	JA8209A	1	

KOR-05428-2

TITLE		WL	DOCUMENT NO.	SHEET NO.	REV.
Logic Wirewrap - Applicable to Index and Sector in A and B Cable				8	AT/AV

SIGNAL NAME OR NUMBER IDENTIFICATION	ORIGIN	DESTI-NATION	Z LEVEL	NOTES
	B0216A	JA8208B	1	
	B0216B	JA8208A	1	
	B0217A	JA8207B	1	
	B0217B	JA8207A	1	
	B0221A	JA8206B	1	
	B0221B	JA8206A	1	
	B0222A	JA8205B	1	
	B0222B	JA8205A	1	
	B0223A	JA8204B	1	
	B0223B	JA8204A	1	
	B0224A	B0121A	2	
	B0224A	B0424A	1	
	B0224B	A0224A	2	
	B0224B	B0424B	1	
	B0225A	B0425A	1	
	B0225A	A0226A	2	
	B0225B	B0425B	1	
	B0225B	A0229A	2	
	B0226A	A0227A	2	
	B0226A	B0426A	1	
	B0226B	B0426B	1	
	B0226B	A0228A	2	
	B0227A	B0427A	1	
	B0227A	B0116A	2	
	B0227B	B0616B	1	
	B0227B	A0413A	2	
	B0228A	B0122B	2	
	B0228A	B0428A	1	
	B0228B	A0822B	1	
	B0229A	A0413B	1	
	B0229B	A0821A	1	
	B0230A	A0412A	1	
	B0230B	B0812B	1	
	B0231A	B0103A	1	
	B0231A	A0613B	2	
	B0231B	A0604B	1	
	B0232A	B0432A	1	
	B0232A	A0232A	2	
	B0232B	A0224B	2	
	B0232B	B0432B	1	
	B0233A	A0603B	1	
	B0233B	B0433B	1	
	B0233B	A0230A	2	
	B0234A	JA8233A	1	
	B0234A	JA8333A	2	
	B0301A	JA8330A	1	Used on BK5A7V/W & BK5C4C/D only
	B0304A	B0104A	2	
	B0304A	B0813B	1	
	B0304B	B0104B	2	
	B0304B	B0821B	1	
	B0305A	JA8325A	1	
	B0305B	JA8325B	1	
	B0306A	JA8318A	1	

KOR-0542B-2

TITLE	WL	DOCUMENT NO.	SHEET NO.	REV.
Logic Wirewrap - Applicable to Index and Sector in A and B Cable			9	AT/AV

SIGNAL NAME OR NUMBER IDENTIFICATION	ORIGIN	DESTINATION	Z LEVEL	NOTES
	B03068	JA8318B	1	
	B0307A	B0107A	2	
	B0307A	B0614B	1	
	B0307B	B0911A	1	
	B0307B	B0107B	2	
	B0308A	JA8316A	1	
	B0308B	JA8316B	1	
	B0309A	JA8315A	1	
	B0309B	JA8315B	1	
	B0310A	B0517B	1	
	B0310B	B0515B	1	
	B0311A	JA8339B	1	
	B0311B	JA8340A	1	
	B0312A	JA8338B	1	
	B0312B	JA8338A	1	
	B0313A	JA8326B	1	
	B0313B	JA8326A	1	
	B0314A	JA8327B	1	
	B0314B	JA8327A	1	
	B0315A	B0511A	1	
	B0315B	B0510B	1	
	B0321B	B0403B	2	
	B0321B	B1030A	1	
	B0323A	B0123A	1	
	B0323B	B0123B	1	
	B0324A	B0605B	2	
	B0324A	B0124A	1	
	B0324B	A0426B	1	
	B0324B	B0124B	2	
	B0325A	JA8319A	1	
	B0325B	JA8319B	1	
	B0326A	JA8317A	1	
	B0326B	JA8317B	1	
	B0327A	JA8320A	1	
	B0327B	JA8320B	1	
	B0328A	JA8334A	1	
	B0328B	JA8333B	1	
	B0329A	JA8337A	1	
	B0329B	JA8336B	1	
	B0330A	JA8335A	1	
	B0330B	JA8335B	1	
	B0331A	B0131A	2	
	B0331A	A0627B	1	
	B0331B	A0626B	1	
	B0331B	B0131B	2	
	B0334A	JA8234B	1	
	B0334A	JA8334B	2	
	B0401A	JA8330B	1	Used on BK5A7V/W & BK5C4C/D only
	B0402A	B0202A	1	
	B0402B	B0732B	1	
	B0403A	B0531A	2	
	B0403A	B0203A	1	
	B0403B	B0321B	2	

KOR-05428-2

TITLE Logic Wirewrap - Applicable to Indes and Sector in A and B Cable	WL	DOCUMENT NO:	SHEET NO. 10	REV. AT/AV

SIGNAL NAME OR NUMBER IDENTIFICATION	ORIGIN	DESTINATION	Z LEVEL	NOTES
	B04038	B0532A	1	
	B0404A	B0503B	1	
	B0404B	B0510A	1	
	B0405A	JA83238	1	
	B0405B	JA8323A	1	
	B0406A	JA8324B	1	
	B0406B	JA8324A	1	
	B0407A	JA8303B	1	
	B0407B	JA8303A	1	
	B0408A	JA8314B	1	
	B0408B	JA8314A	1	
	B0409A	JA8312B	1	
	B0409B	JA8312A	1	
	B0410A	B1023A	2	
	B0410A	JA8313B	1	
	B0410B	JA8313A	1	
	B0410B	B1023B	2	
	B0411A	JA83029	1	
	B0411B	JA8302A	1	
	B0412A	JA8301B	1	
	B0412B	JA8301A	1	
	B0413A	JA8311B	1	
	B0413B	JA8311A	1	
	B0414A	JA8310B	1	
	B0414B	JA8310A	1	
	B0415A	JA8309B	1	
	B0415B	JA8309A	1	
	B0416A	JA8308B	1	
	B0416B	JA8308A	1	
	B0417A	JA8307B	1	
	B0417B	JA8307A	1	
	B0421A	JA8306B	1	
	B0421B	JA8306A	1	
	B0422A	JA8305B	1	
	B0422B	JA8305A	1	
	B0423A	JA8304B	1	
	B0423B	JA8304A	1	
	B0424A	B0631A	2	
	B0424A	B0224A	1	
	B0424B	B0224B	1	
	B0424B	B0628B	2	
	B0425A	B0626B	2	
	B0425A	B0225A	1	
	B0425B	B0624A	2	
	B0425B	B0225B	1	
	B0426A	B0622B	2	
	B0426A	B0226A	1	
	B0426B	B0629B	2	
	B0426B	B0226B	1	
	B0427A	B0633A	2	
	B0427A	B0227A	1	
	B0428A	B0228A	1	

KOR-0542B-2

TITLE	WL	DOCUMENT NO.	SHEET NO.	REV.
Logic Wirewrap - Applicable to Index and Sector in A and B Cable			11	AT/AV

SIGNAL NAME OR NUMBER IDENTIFICATION	ORIGIN	DESTINATION	Z LEVEL	NOTES
	B0428A	B0630A	2	
	B0432A	B06068	2	
	B0432A	B0232A	1	
	B0432B	B0621A	2	
	B0432B	B0232B	1	
	B0433B	B0502A	2	
	B0433B	B0233B	1	
	B0434A	JA8236A	1	
	B0434A	JA8336A	2	
	B0501A	JA8230B	2	Used on BK5A7V/W & BK5C4C/D only
	B0502A	B0433B	2	
	B0502A	B1009A	1	
	B0502B	B1025B	2	
	B0503B	B0404A	1	
	B0505A	JA8221A	1	
	B0505B	JA8221B	1	
	B0506A	B0932A	2	
	B0506B	B1027A	2	
	B0507A	B1010A	1	
	B0510A	B0404B	1	
	B0510B	B0315B	1	
	B0511A	B0315A	1	
	B0512A	A0430A	2	
	B0512B	A0431B	2	
	B0513A	A0427A	2	
	B0513B	A0428B	2	
	B0514A	A0410B	1	
	B0515A	B1030B	1	
	B0515B	B0310B	1	
	B0516A	B0110B	1	
	B0516B	B0723B	1	
	B0517A	B1027B	1	
	B0517B	B0310A	1	
	B0521A	B0110A	1	
	B0521B	B1016B	1	
	B0522A	B0710B	1	
	B0523B	B1002A	1	
	B0524A	JA8322B	1	
	B0524B	JA8322A	1	
	B0525A	JA8321A	1	
	B0525B	JA8321B	1	
	B0526A	JA8328A	1	
	B0526B	JA8328B	1	
	B0527A	JA8342A	1	
	B0527B	JA8342B	1	
	B0529A	JA8341B	1	
	B0529B	JA8341A	1	
	B0530A	B0709B	1	
	B0530B	B0707B	2	
	B0530B	A0407A	1	
	B0531A	B0625A	1	
	B0531A	B0403A	2	
	B0531B	B1010B	1	

KOR-0542B-2

TITLE	WL	DOCUMENT NO.	SHEET NO.	REV.
Logic Wirewrap - Applicable to Index and Sector in A and B Cable			12	AT/AV

SIGNAL NAME OR NUMBER IDENTIFICATION	ORIGIN	DESTINATION	Z LEVEL	NOTES
	B0532A	B04038	1	
	B0532A	A03218	2	
	B0532B	B10088	2	
	B0532B	A1013A	1	
	B0533A	B02038	1	
	B0533B	B07088	1	
	B0534A	JA83378	2	
	B0534A	JA82378	1	
	B0601A	JA8330A	2	Used on BK5A7V/W & BK5C4C/D only
	B0602A	A07118	1	
	B0602B	A07258	1	
	B0603A	A07128	1	
	B0603B	B0914A	1	
	B0604A	A0713A	1	
	B0604B	A0727A	1	
	B0605A	B0910B	1	
	B0605B	B0903A	1	
	B0605B	B0324A	2	
	B0606A	B0917B	1	
	B0606B	B0432A	2	
	B0607A	B0827B	1	
	B0607B	B0922B	1	
	B0609A	A0717A	1	
	B0609B	A0715A	1	
	B0610A	A0713B	1	
	B0611B	A0716A	1	
	B0613A	JA8110A	1	
	B0613B	B0904A	1	
	B0614A	B0914B	1	
	B0614B	B0307A	1	
	B0615A	B0933B	1	
	B0615A	JA81018	1	
	B0616B	B0712B	2	
	B0616B	B0227B	1	
	B0617B	A0926B	1	
	B0621A	B0432B	2	
	B0621A	B0832A	1	
	B0622B	B0426A	2	
	B0622B	B0826B	1	
	B0623B	JA8111A	1	
	B0624A	B0826A	1	
	B0624A	B0425B	2	
	B0624B	JA8112A	1	
	B0625A	B0833B	2	
	B0625A	B0531A	1	
	B0625B	B0915B	1	
	B0626A	B0817A	2	
	B0626A	B0117A	1	
	B0626B	B0811B	1	
	B0626B	B0425A	2	
	B0628B	B0823B	1	
	B0628B	B0424B	2	
	B0629B	B0426B	2	

KOR-0542B-2

TITLE	WL	DOCUMENT NO.	SHEET NO.	REV.
Logic Wirewrap - Applicable to Index and Sector in A and B Cable			13	AT/AV

SIGNAL NAME OR NUMBER IDENTIFICATION	ORIGIN	DESTINATION	Z LEVEL	NOTES
	B0629B	B0822A	1	
	B0630A	B0428A	2	
	B0630A	B0823A	1	
	B0631A	B0832B	1	
	B0631A	B0424A	2	
	B0632A	B0124A	2	
	B0632B	B0910A	1	
	B0633A	B0427A	2	
	B0633A	B0825A	1	
	B0633B	A0217A	1	
	B0634A	JA8339A	2	
	B0634A	JA8239A	1	
	B0701A	JA8330B	2	Used on BK5A7V/W & BK5C4C/D only
	B0702A	JA8344A	1	
	B0702B	JA8343B	1	
	B0703A	JA8243B	1	
	B0703B	JA8244A	1	
	B0704A	JA8245A	1	
	B0704B	JA8245B	1	
	B0705A	B0707A	1	
	B0705B	B0706A	1	
	B0706A	B0813B	2	
	B0706A	B0705B	1	
	B0706B	B0727B	1	
	B0707A	B0705A	1	
	B0707A	B0821B	2	
	B0707B	B0530B	2	
	B0707B	A0528B	1	
	B0708B	B0533B	1	
	B0709A	A0130B	1	
	B0709B	B0530A	1	
	B0710B	B0522A	1	
	B0711A	JA8345A	1	
	B0711B	JA8345B	1	
	B0712B	B0616B	2	
	B0723B	B0516B	1	
	B0726B	B0103A	2	
	B0727B	B0706B	1	
	B0729A	JA8108B	1	
	B0729B	JA8109B	1	
	B0732B	B0402B	1	
	B0734A	JA8340B	2	
	B0734A	JA8240B	1	
	B0801A	B0811A	1	
	B0804A	A0311B	1	
	B0804B	A1017B	2	
	B0804B	B0921B	1	
	B0805A	B0814A	1	
	B0805B	A0332A	1	
	B0806A	B0911B	1	
	B0806B	B0924A	1	
	B0807A	B0932B	1	
	B0807B	B0925B	1	

KOR-0542B-2

TITLE	WL	DOCUMENT NO.	SHEET NO.	REV.
Logic Wirewrap - Applicable to Index and Sector in A and B Cable			14	AT/AV

SIGNAL NAME OR NUMBER IDENTIFICATION	ORIGIN	DESTI-NATION	Z LEVEL	NOTES
	B0810A	A0809B	1	
	B0810B	A0814B	1	
	B0811A	B0801A	1	
	B0811B	B0626B	1	
	B0812A	B0913B	1	
	B0812A	A0327B	2	
	B0812B	B0927A	2	
	B0812B	B0230B	1	
	B0813A	B0815B	2	
	B0813B	B0304A	1	
	B0813B	B0706A	2	
	B0814A	B0814B	2	
	B0814A	B0805A	1	
	B0814B	B0825B	1	
	B0814B	B0814A	2	
	B0815A	A0126B	1	
	B0815B	B0824B	1	
	B0815B	B0813A	2	
	B0816A	A0808A	1	
	B0816B	B0902A	1	
	B0817A	B0626A	2	
	B0817A	B0906B	1	
	B0817B	B0907B	1	
	B0817B	A0425B	2	
	B0821A	B0917A	1	
	B0821B	B0304B	1	
	B0821B	B0707A	2	
	B0822A	B0629B	1	
	B0822B	A0333A	2	
	B0823A	B0630A	1	
	B0823B	B0628B	1	
	B0824A	B0824B	2	
	B0824A	B0834A	1	
	B0824B	B0824A	2	
	B0824B	B0815B	1	
	B0825A	B0633A	1	
	B0825B	B0814B	1	
	B0825B	B0829A	2	
	B0826A	B0624A	1	
	B0826B	B0622B	1	
	B0827A	B0933A	1	
	B0827B	B0607A	1	
	B0827B	B0902B	2	
	B0828B	A0823A	1	
	B0829A	B0825B	2	
	B0829A	B0829B	1	
	B0829B	B0829A	1	
	B0829B	B0830A	2	
	B0830A	B0829B	2	
	B0831A	A0113B	1	
	B0832A	B0621A	1	
	B0832B	B0631A	1	

KOR-05428-2

TITLE	WL	DOCUMENT NO.	SHEET NO.	REV.
Logic Wirewrap - Applicable to Index and Sector in A anc B Cable			15	AT/AV

SIGNAL NAME OR NUMBER IDENTIFICATION	ORIGIN	DESTINATION	Z LEVEL	NOTES
	B0833A	B0929A	1	
	B0833B	B0625A	2	
	B0833B	B1003A	1	
	B0834A	JA8243A	2	
	B0834A	B0824A	1	
	B0902A	B0816B	1	
	B0902B	B0905B	1	
	B0902B	B0827B	2	
	B0903A	B0605B	1	
	B0903A	A0832A	2	
	B0903B	A0410A	1	
	B0904A	B0613B	1	
	B0904B	A0816A	1	
	B0905A	A0812B	1	
	B0905B	B0902B	1	
	B0906A	A0823B	1	
	B0906B	A0810B	2	
	B0906B	B0817A	1	
	B0907A	A0923B	1	
	B0907B	B0817B	1	
	B0908A	A0922B	1	
	B0909A	B0916A	2	
	B0910A	B0632B	1	
	B0910B	B0609A	1	
	B0911A	B0307B	1	
	B0911B	B0806A	1	
	B0912A	A1014B	1	
	B0912B	A0708A	1	
	B0913A	A0710A	1	
	B0913B	B0812A	1	
	B0913B	A0925B	2	
	B0914A	A0812A	2	
	B0914A	B0603B	1	
	B0914B	B0614A	1	
	B0915A	A0924B	2	
	B0915B	B0625B	1	
	B0916A	A0717B	1	
	B0916A	B0909A	2	
	B0916B	A0722B	1	
	B0917A	B0821A	1	
	B0917B	B0606A	1	
	B0921B	A0916B	2	
	B0921B	B0804B	1	
	B0922A	A0813A	1	
	B0922B	B0607B	1	
	B0923A	B0934A	1	
	B0923B	A1017A	1	
	B0924A	B0806B	1	
	B0924B	JA8004A	1	
	B0925A	A0915B	1	
	B0925B	B0807B	1	
	B0926A	A0825B	1	

TITLE	WL	DOCUMENT NO.	SHEET NO.	REV.
Logic Wirewrap - Applicable to Index and Sector in A and B Cable			16	AT/AV

SIGNAL NAME OR NUMBER IDENTIFICATION	ORIGIN	DESTI-NATION	Z LEVEL	NOTES
	B0926B	A1022A	1	
	B0927A	B0812B	2	
	B0927B	A03088	1	
	B0928B	A03078	1	
	B0929A	B0833A	1	
	B0929B	A07078	1	
	B0930A	A08138	1	
	B0930B	A09278	1	
	B0931A	A0702A	1	
	B0931B	A0414A	1	
	B0932A	B1009B	1	
	B0932A	B0506A	2	
	B0932B	B0807A	1	
	B0933A	B0827A	1	
	B0933B	A0707A	2	
	B0933B	B0615A	1	
	B0934A	JA8343A	2	
	B0934A	B0923A	1	
	B1002A	B0523B	1	
	B1003A	B0833B	1	
	B1007A	JA8222B	1	
	B1007B	JA8222A	1	
	B1008A	A0811B	1	
	B1008B	B0532B	2	
	B1009A	B0502A	1	
	B1009B	B0932A	1	
	B1010A	B0507A	1	
	B1010B	B0531B	1	
	B1015B	A0410B	2	
	B1016A	A1015B	1	
	B1016B	B0521B	1	
	B1017B	JA8003A	1	BK5C6D ONLY
	B1022A	B0210A	2	
	B1022B	B0210B	2	
	B1023A	B0410A	2	
	B1023B	B0410B	2	
	B1024A	JA8001B	1	BK5C6D ONLY
	B1025B	B0502B	2	
	B1026A	A0217B	2	
	B1026B	JA8003B	1	BK5C6D ONLY
	B1027A	B0506B	2	
	B1027B	B0517A	1	
	B1028A	JA8242A	1	
	B1028B	JA8242B	1	
	B1029A	JA8241B	1	
	B1029B	JA8241A	1	
	B1030A	B0321B	1	
	B1030B	B0515A	1	
	B1031A	JA8228A	1	
	B1031B	JA8228B	1	
	B1033A	A1027A	2	BK5C6D ONLY
	B1033B	A0933A	1	BK5C6D ONLY
	B1034A	JA8244B	1	
	B1034A	JA8344B	2	
	JA8001A	A0411B	2	
	JA8001A	A1012A	1	
	JA8001B	B1024A	1	BK5C6D ONLY
	JA8002B	A0409A	1	

KOR-0542B-2

TITLE	WL	DOCUMENT NO.	SHEET NO.	REV.
Logic Wirewrap - Applicable to Index and Sector in A and B Cable			17	AT/AV

SIGNAL NAME OR NUMBER IDENTIFICATION	ORIGIN	DESTINATION	Z LEVEL	NOTES
	JA8003A	A0133B	1	All units except BK5C6D
	JA8003A	B1017B	1	BK5C6D ONLY
	JA8003B	A1028B	1	All units except BK5C6D
	JA8003B	B1026B	1	BK5C6D ONLY
	JA8004A	A1030B	2	
	JA8004A	B0924B	1	
	JA8004B	A1029B	1	
	JA8005A	A1026B	1	
	JA8005B	A1028A	1	
	JA8006A	A1026A	1	
	JA8006B	A1029A	1	
	JA8007A	A0101A	1	
	JA8007B	A0101A	2	
	JA8008A	JA81028	1	
	JA8008B	JA8112B	1	
	JA8009B	A1012B	1	
	JA8010A	A1027A	1	
	JA8010B	A1034A	1	
	JA8011A	A0428B	1	
	JA8011B	A0431B	1	
	JA8012A	A0427A	1	
	JA8013A	A0412B	1	
	JA8014A	A0430A	1	
	JA8014B	A0134B	1	
	JA8101A	A0601A	1	
	JA8101B	B0616A	1	
	JA8102A	B0132A	1	
	JA8102B	JA8008A	1	
	JA8103A	B0133B	1	
	JA8103B	A0601B	1	
	JA8104A	B0132B	1	
	JA8104B	A0825A	1	
	JA8105A	A1001A	1	
	JA8105B	A0521B	1	
	JA8106A	A0522B	1	
	JA8106B	A0508B	1	
	JA8107A	A0801A	1	
	JA8107B	A0507B	1	
	JA8108A	A0414B	1	
	JA8108B	B0729A	1	
	JA8109A	A0409B	1	
	JA8109B	B0729B	1	
	JA8110A	B0613A	1	
	JA8110B	A0413A	1	
	JA8111A	B0623B	1	
	JA8111B	A0634B	1	
	JA8112A	B0624B	1	
	JA8112B	JA8008B	1	
	JA8113A	A1002A	1	
	JA8113B	A0633B	1	
	JA8114A	A0701A	1	
	JA8114B	A0932B	2	
	JA8114B	A1032B	1	
	JA8201A	B0212B	1	

KOR-0542B-2

TITLE	WL	DOCUMENT NO.	SHEET NO.	REV.
Logic Wirewrap - Applicable to Index and Sector in A and B Cable			18	AT/AV

SIGNAL NAME OR NUMBER IDENTIFICATION	ORIGIN	DESTINATION	Z LEVEL	NOTES
	JA8201B	B0212A	1	
	JA8202A	B0211B	1	
	JA8202B	B0211A	1	
	JA8203A	B0207B	1	
	JA8203B	B0207A	1	
	JA8204A	B0223B	1	
	JA8204B	B0223A	1	
	JA8205A	B0222B	1	
	JA8205B	B0222A	1	
	JA8206A	B0221B	1	
	JA8206B	B0221A	1	
	JA8207A	B0217B	1	
	JA8207B	B0217A	1	
	JA8208A	B0216B	1	
	JA8208B	B0216A	1	
	JA8209A	B0215B	1	
	JA8209B	B0215A	1	
	JA8210A	B0214B	1	
	JA8210B	B0214A	1	
	JA8211A	B0213B	1	
	JA8211B	B0213A	1	
	JA8212A	B0209B	1	
	JA8212B	B0209A	1	
	JA8213A	B0210B	1	
	JA8213B	B0210A	1	
	JA8214A	B0208B	1	
	JA8214B	B0208A	1	
	JA8215A	B0109A	1	
	JA8215B	B0109B	1	
	JA8216A	B0108A	1	
	JA8216B	B0108B	1	
	JA8217A	B0126A	1	
	JA8217B	B0126B	1	
	JA8218A	B0106A	1	
	JA8218B	B0106B	1	
	JA8219A	B0125A	1	
	JA8219B	B0125B	1	
	JA8220A	B0127A	1	
	JA8220B	B0127B	1	
	JA8221A	B0505A	1	
	JA8221B	B0505B	1	
	JA8222A	B1007B	1	
	JA8222B	B1007A	1	
	JA8223A	B0205B	1	
	JA8223B	B0205A	1	
	JA8224A	B0206B	1	
	JA8224B	B0206A	1	
	JA8225A	B0105A	1	
	JA8225B	B0105B	1	
	JA8226A	B0113B	1	
	JA8226B	B0113A	1	
	JA8227A	B0114B	1	

KOR-0542B-2

TITLE Logic Wirewrap - Applicable to Index and Sector in A and B Cable	WL	DOCUMENT NO.	SHEET NO. 19	REV. AT/AV

SIGNAL NAME OR NUMBER IDENTIFICATION	ORIGIN	DESTINATION	Z LEVEL	NOTES
	JA8227B	B0114A	1	
	JA8228A	B1031A	1	
	JA8228B	B1031B	1	
	JA8229A	A1003B	1	
	JA8229B	A1003A	1	
	JA8230A	B0101A	1	Used on BK5A7V/W & BK5C4C/D only
	JA8230A	B0134A	2	Used on BK5A7V/W & BK5C4C/D only
	JA8230B	B0201A	1	Used on BK5A7V/W & BK5C4C/D only
	JA8230B	B0501A	2	Used on BK5A7V/W & BK5C4C/D only
	JA8231A	A1004B	1	
	JA8233A	B0234A	1	
	JA8233B	B0128B	1	
	JA8234A	B0128A	1	
	JA8234B	B0334A	1	
	JA8235A	B0130A	1	
	JA8235B	B0130B	1	
	JA8236A	B0434A	1	
	JA8236B	B0129B	1	
	JA8237A	B0129A	1	
	JA8237B	B0534A	1	
	JA8238A	B0112B	1	
	JA8238B	B0112A	1	
	JA8239A	B0634A	1	
	JA8239B	B0111A	1	
	JA8240A	B0111B	1	
	JA8240B	B0734A	1	
	JA8241A	B1029B	1	
	JA8241B	B1029A	1	
	JA8242A	B1028A	1	
	JA8242B	B1028B	1	
	JA8243A	B0834A	2	
	JA8243B	B0703A	1	
	JA8244A	B0703B	1	
	JA8244B	B1034A	1	
	JA8245A	B0704A	1	
	JA8245B	B0704B	1	
	JA8301A	B0412B	1	
	JA8301B	B0412A	1	
	JA8302A	B0411B	1	
	JA8302B	B0411A	1	
	JA8303A	B0407B	1	
	JA8303B	B0407A	1	
	JA8304A	B0423B	1	
	JA8304B	B0423A	1	
	JA8305A	B0422B	1	
	JA8305B	B0422A	1	
	JA8306A	B0421B	1	
	JA8306B	B0421A	1	
	JA8307A	B0417B	1	
	JA8307B	B0417A	1	
	JA8308A	B0416B	1	
	JA8308B	B0416A	1	
	JA8309A	B0415B	1	
	JA8309B	B0415A	1	
	JA8310A	B0414B	1	
	JA8310B	B0414A	1	

KOR-0542B-2

TITLE Logic Wirewrap - Applicable to Index and Sector in A and B Cable	WL	DOCUMENT NO.	SHEET NO. 20	REV. AT/AV

SIGNAL NAME OR NUMBER IDENTIFICATION	ORIGIN	DESTINATION	Z LEVEL	NOTES
	JA8311A	B0413B	1	
	JA8311B	B0413A	1	
	JA8312A	B0409B	1	
	JA8312B	B0409A	1	
	JA8313A	B0410B	1	
	JA8313B	B0410A	1	
	JA8314A	B0408B	1	
	JA8314B	B0408A	1	
	JA8315A	B0309A	1	
	JA8315B	B0309B	1	
	JA8316A	B0308A	1	
	JA8316B	B0308B	1	
	JA8317A	B0326A	1	
	JA8317B	B0326B	1	
	JA8318A	B0306A	1	
	JA8318B	B0306B	1	
	JA8319A	B0325A	1	
	JA8319B	B0325B	1	
	JA8320A	B0327A	1	
	JA8320B	B0327B	1	
	JA8321A	B0525A	1	
	JA8321B	B0525B	1	
	JA8322A	B0524B	1	
	JA8322B	B0524A	1	
	JA8323A	B0405B	1	
	JA8323B	B0405A	1	
	JA8324A	B0406B	1	
	JA8324B	B0406A	1	
	JA8325A	B0305A	1	
	JA8325B	B0305B	1	
	JA8326A	B0313B	1	
	JA8326B	B0313A	1	
	JA8327A	B0314B	1	
	JA8327B	B0314A	1	
	JA8328A	B0526A	1	
	JA8328B	B0526B	1	
	JA8329A	A1003B	2	
	JA8329B	A1003A	2	
	JA8330A	B0301A	1	Used on BK5A7V/W & BK5C4C/D only
	JA8330B	B0401A	1	Used on BK5A7V/W & BK5C4C/D only
	JA8330A	B0601A	2	Used on BK5A7V/W & BK5C4C/D only
	JA8330B	B0701A	2	Used on BK5A7V/W & BK5C4C/D only
	JA8331A	A1004B	2	
	JA8333A	B0234A	2	
	JA8333B	B0328B	1	
	JA8334A	B0328A	1	
	JA8334B	B0334A	2	
	JA8335A	B0330A	1	
	JA8335B	B0330B	1	
	JA8336A	B0434A	2	
	JA8336B	B0329B	1	
	JA8337A	B0329A	1	
	JA8337B	B0534A	2	
	JA8338A	B0312B	1	
	JA8338B	B0312A	1	
	JA8339A	B0634A	2	

KOR-0542B-2

TITLE		WL	DOCUMENT NO.	SHEET NO.	REV.
Logic Wirewrap - Applicable to Index and Sector in A and B Cable				21	AT/AV

SIGNAL NAME OR NUMBER IDENTIFICATION	ORIGIN	DESTINATION	Z LEVEL	NOTES
	JA8339B	BJ311A	1	
	JA8340A	B0311B	1	
	JA8340B	B0734A	2	
	JA8341A	B0529B	1	
	JA8341B	B0529A	1	
	JA8342A	B0527A	1	
	JA8342B	B0527B	1	
	JA8343A	B0934A	2	
	JA8343B	B0702B	1	
	JA8344A	B0702A	1	
	JA8344B	B1034A	2	
	JA8345A	B0711A	1	
	JA8345B	B0711B	1	

KOR-0542B-2

COMMENT SHEET

Manual Title:

Publication No: **Revision:**

Name: _____

Company: _____

Street Address: _____

City: _____ **State:** _____ **Zip Code:** _____

This form is not intended to be used as an order blank. Seagate welcomes your evaluation of this manual. Please indicate any errors, suggested additions or deletions, or general comments below (please include page number references)

☐ *Please reply* ☐ *No reply necessary*

Cut along line

Printed in U.S.A.

KØR 0502F

No postage stamp necessary if mailed in U.S.A.

Fold on dotted lines and tape. Postal regulations prohibit the use of staples.

FOLD

FOLD

FIRST CLASS
PERMIT NO. 8241

MINNEAPOLIS, MINN.

BUSINESS REPLY MAIL

NO POSTAGE STAMP NECESSARY IF MAILED IN U. S. A.

POSTAGE WILL BE PAID BY

SEAGATE TECHNOLOGY, INC.
TECHNICAL PUBLICATIONS DEPARTMENT
12701 WHITEWATER DRIVE
MINNETONKA, MN. 55343

CUT ALONG LINE

FOLD

FOLD