2-1

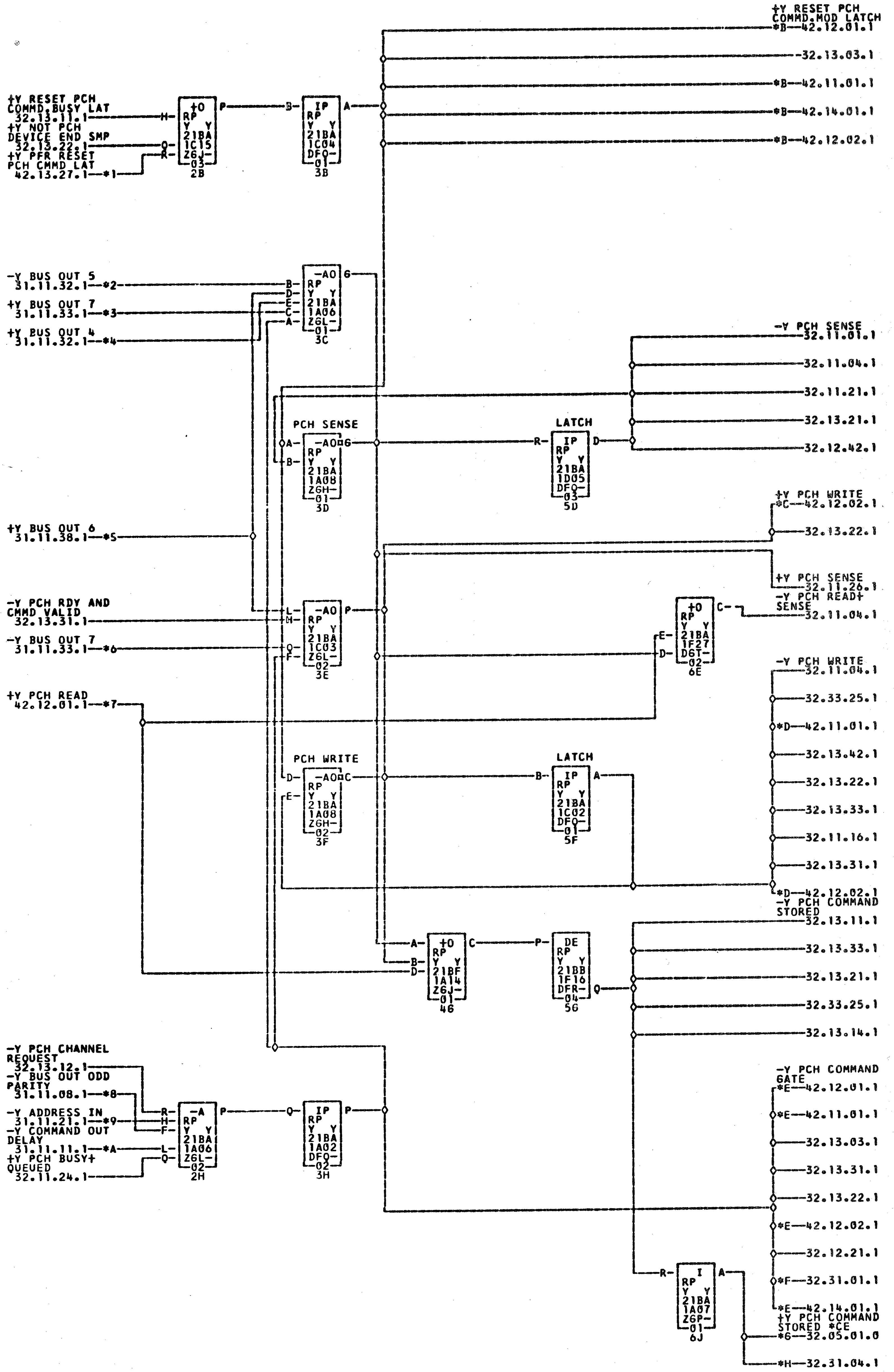
+Y RESET PCH COMMD.BUSY LAT 32.13.11.1
+Y NOT PCH DEVICE END SMP 32.13.22.1
+Y PFR RESET PCH CMMD LAT 42.13.27.1—*1
+0 RP Y Y 21BA 1C15 Z6J- 03 2B
IP RP Y Y 21BA 1C04 DFQ- 01 3B
+Y RESET PCH COMMD.MOD LATCH *B—42.12.01.1
-32.13.03.1
*B—42.11.01.1
*B—42.14.01.1
*B—42.12.02.1
-Y BUS OUT 5 31.11.32.1—*2
+Y BUS OUT 7 31.11.33.1—*3
+Y BUS OUT 4 31.11.32.1—*4
-AO RP Y Y 21BA 1A06 Z6L- 01 3C
PCH SENSE
-AO RP Y Y 21BA 1A08 Z6H- 01 3D
LATCH
IP RP Y Y 21BA 1D05 DFQ- 03 5D
-Y PCH SENSE 32.11.01.1
32.11.04.1
32.11.21.1
32.13.21.1
32.12.42.1
+Y BUS OUT 6 31.11.38.1—*5
+Y PCH WRITE *C—42.12.02.1
32.13.22.1
+Y PCH SENSE 32.11.26.1
-Y PCH READ+ SENSE 32.11.04.1
-Y PCH RDY AND CMMD VALID 32.13.31.1
-Y BUS OUT 7 31.11.33.1—*6
-AO RP Y Y 21BA 1C03 Z6L- 02 3E
+0 RP Y Y 21BA 1F27 D6T- 02 6E
+Y PCH READ 42.12.01.1—*7
-Y PCH WRITE 32.11.04.1
32.33.25.1
*D—42.11.01.1
32.13.42.1
32.13.22.1
32.13.33.1
32.11.16.1
32.13.31.1
*D—42.12.02.1
PCH WRITE
-AO RP Y Y 21BA 1A08 Z6H- 02 3F
LATCH
IP RP Y Y 21BA 1C02 DFQ- 01 5F
-Y PCH COMMAND STORED 32.13.11.1
32.13.33.1
32.13.21.1
32.33.25.1
32.13.14.1
+0 RP Y Y 21BF 1A14 Z6J- 01 46
DE RP Y Y 21BB 1F16 DFR- 04 56
-Y PCH CHANNEL REQUEST 32.13.12.1
-Y BUS OUT ODD PARITY 31.11.08.1—*8
-Y ADDRESS IN 31.11.21.1—*9
-Y COMMAND OUT DELAY 31.11.11.1—*A
+Y PCH BUSY+ QUEUED 32.11.24.1
-A RP Y Y 21BA 1A06 Z6L- 02 2H
IP RP Y Y 21BA 1A02 DFQ- 02 3H
-Y PCH COMMAND GATE *E—42.12.01.1
*E—42.11.01.1
32.13.03.1
32.13.31.1
32.13.22.1
*E—42.12.02.1
32.12.21.1
*F—32.31.01.1
*E—42.14.01.1
I RP Y Y 21BA 1A07 Z6P- 01 6J
+Y PCH COMMAND STORED *CE *6—32.05.01.0
*H—32.31.04.1

*1—21B1E32L
*7—21B1H32C
*C—21B1H32R
*F—21B1D01H

*2—21B1F01R
*8—21B1F04F
——21B4F03R
——21B3A01H

*3—21B1F01H
*9—21B1F03N
*D—21B1E32F
*6—21B1601H

*4—21B1F01E
*A—21B1F02H
——21B4C03F
—— —CERPA055

*5—21B1F016
*B—21B1F32Q
*E—21B1E32B
*H—21B1T31A

*6—21B1F02B
——21B4D03Q
——21B4C03B
——21B3T31A

COMMENTS
MDM. 4000-4060-5060

TAG	DATE	E.C.NO.	TAG	DATE	E.C.NO.	TAG	DATE	E.C.NO.	TAG	DATE	E.C.NO.
A	09-01-64	121550K	B	10-15-64	121567	C	11-09-64	121572	D	12-19-64	121583
E	02-15-65	121594	F	06-22-65	124265	G	08-18-65	124270	H	01-20-66	125617
J	03-10-66	125633									

2-3

0826631 PCH 0 BIT MODIFIER PCH 1 BIT MOD 2821 32.13.03.1

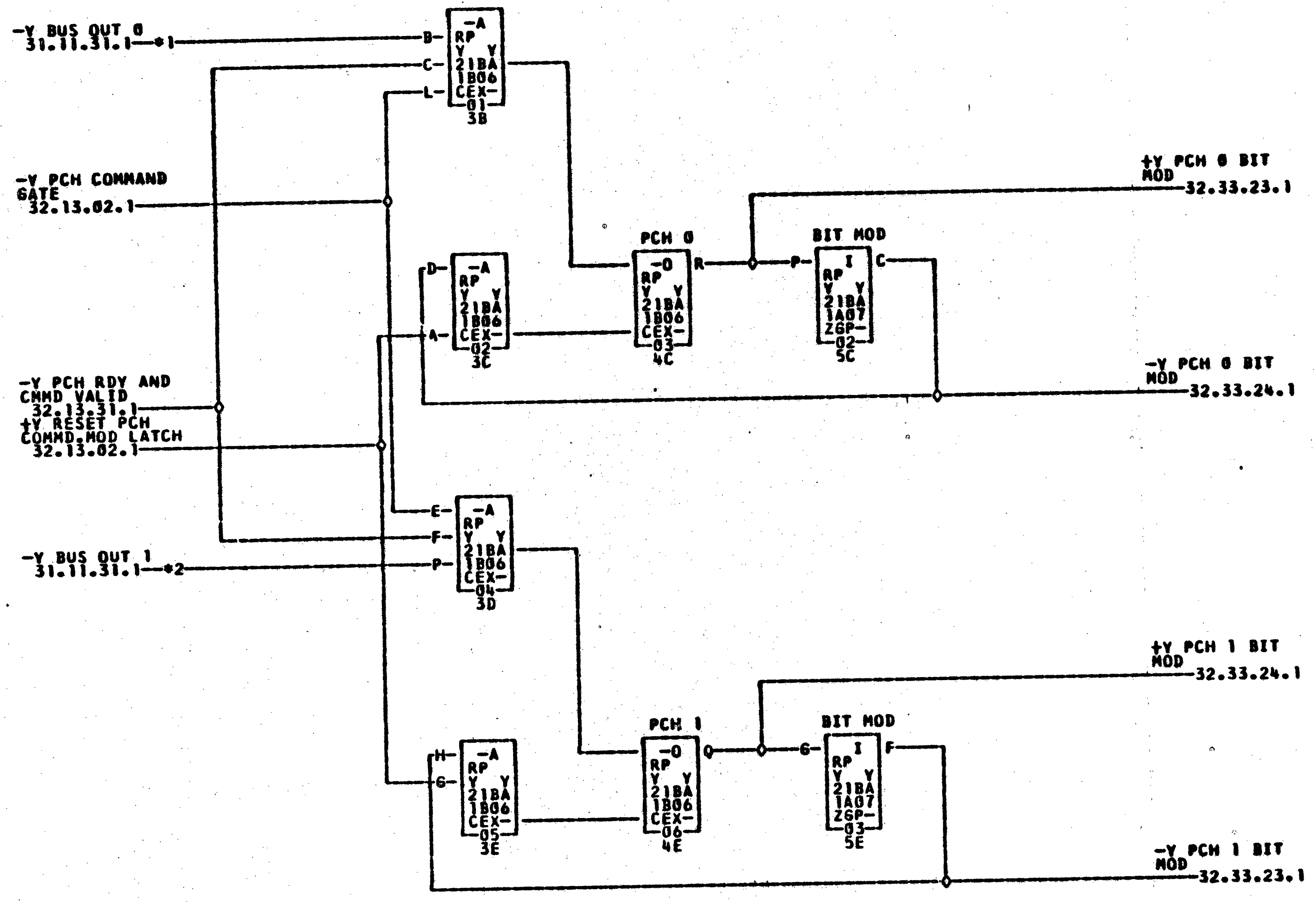

-Y BUS OUT 0
31.11.31.1 *1
-Y PCH COMMAND GATE
32.13.02.1
-Y PCH RDY AND CMMD VALID
32.13.31.1
+Y RESET PCH COMMD.MOD LATCH
32.13.02.1
-Y BUS OUT 1
31.11.31.1 *2
B
C
L
-A
RP
Y Y
21BA
1B06
CEX-
01
3B
D
A
-A
RP
Y Y
21BA
1B06
CEX-
02
3C
PCH 0
-O
RP
Y Y
21BA
1B06
CEX-
03
4C
R
P
BIT MOD
I
RP
Y Y
21BA
1A07
ZGP-
02
5C
C
+Y PCH 0 BIT MOD
32.33.23.1
-Y PCH 0 BIT MOD
32.33.24.1
E
F
P
-A
RP
Y Y
21BA
1B06
CEX-
04
3D
H
G
-A
RP
Y Y
21BA
1B06
CEX-
05
3E
PCH 1
-O
RP
Y Y
21BA
1B06
CEX-
06
4E
Q
G
BIT MOD
I
RP
Y Y
21BA
1A07
ZGP-
03
5E
F
+Y PCH 1 BIT MOD
32.33.24.1
-Y PCH 1 BIT MOD
32.33.23.1

*1—21B1F01L *2—21B1F01M

P.49 COMMENTS

TAG	DATE	E.C.NO.	TAG	DATE	E.C.NO.	TAG	DATE	E.C.NO.	TAG	DATE	E.C.NO.
A	09-01-64	121550K	B	10-15-64	121567						

2

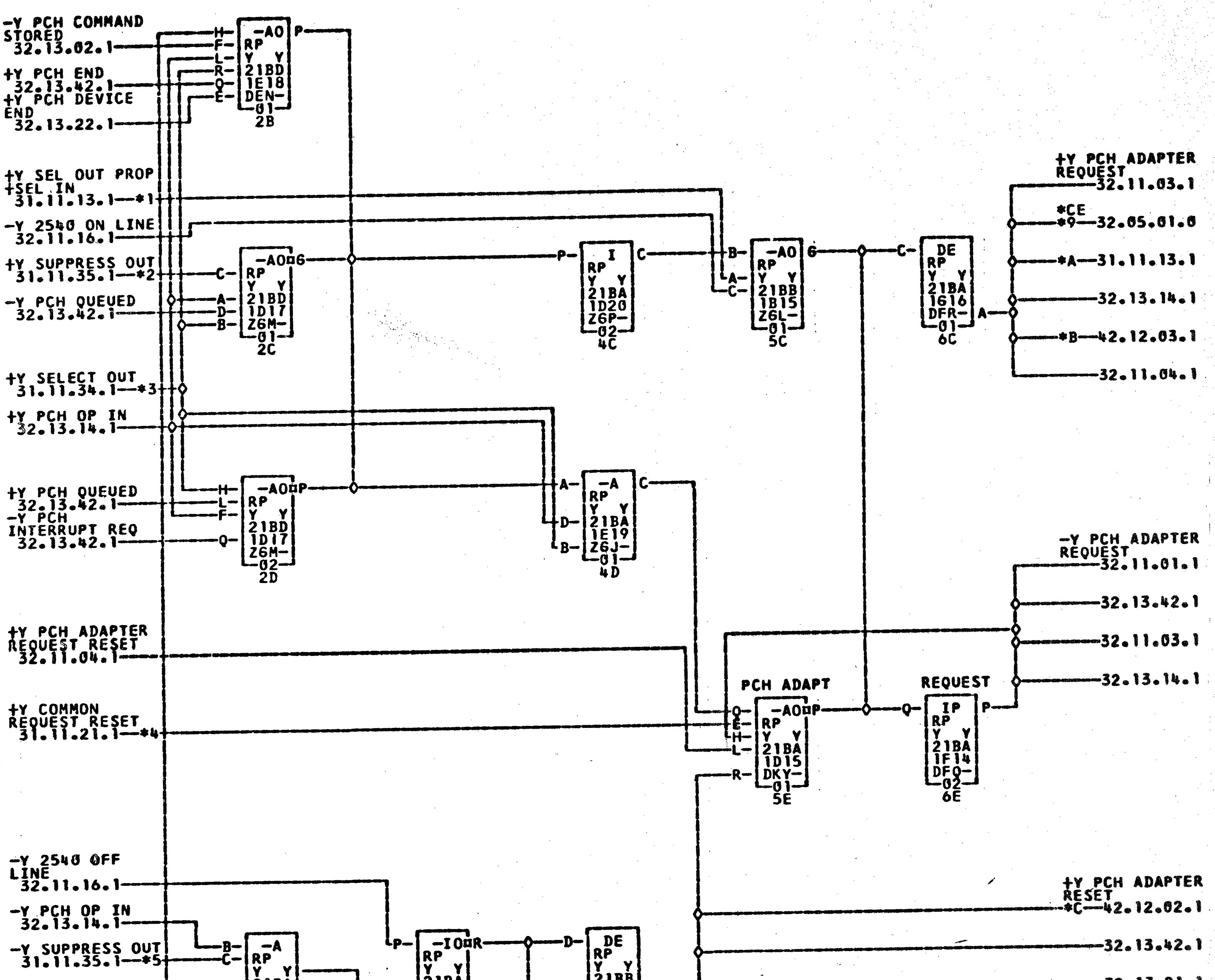
-Y PCH COMMAND STORED 32.13.02.1
+Y PCH END 32.13.42.1
+Y PCH DEVICE END 32.13.22.1
-AO RP Y Y 21BD 1E18 DEN- 01 2B
+Y SEL OUT PROP +SEL IN 31.11.13.1—*1
-Y 2540 ON LINE 32.11.16.1
+Y SUPPRESS OUT 31.11.35.1—*2
-Y PCH QUEUED 32.13.42.1
-AO RP Y Y 21BD 1D17 Z6M- 01 2C
I RP Y Y 21BA 1D20 Z6P- 02 4C
-AO RP Y Y 21BB 1B15 Z6L- 01 5C
DE RP Y Y 21BA 1G16 DFR- 01 6C
+Y PCH ADAPTER REQUEST 32.11.03.1
*CE *9—32.05.01.0
*A—31.11.13.1
32.13.14.1
*B—42.12.03.1
32.11.04.1
+Y SELECT OUT 31.11.34.1—*3
+Y PCH OP IN 32.13.14.1
+Y PCH QUEUED 32.13.42.1
-Y PCH INTERRUPT REQ 32.13.42.1
-AO RP Y Y 21BD 1D17 Z6M- 02 2D
-A RP Y Y 21BA 1E19 Z6J- 01 4D
-Y PCH ADAPTER REQUEST 32.11.01.1
32.13.42.1
32.11.03.1
32.13.14.1
+Y PCH ADAPTER REQUEST RESET 32.11.04.1
+Y COMMON REQUEST RESET 31.11.21.1—*4
PCH ADAPT
-AO RP Y Y 21BA 1D15 DKY- 01 5E
REQUEST
IP RP Y Y 21BA 1F14 DFQ- 02 6E
-Y 2540 OFF LINE 32.11.16.1
-Y PCH OP IN 32.13.14.1
-Y SUPPRESS OUT 31.11.35.1—*5
-A RP Y Y 21BA 1D18 CEY- 01 2F
-IO RP Y Y 21BA 1F19 D6U- 04 3F
DE RP Y Y 21BB 1E13 DFR- 02 4F
+Y PCH ADAPTER RESET *C—42.12.02.1
32.13.42.1
32.13.21.1
+Y OPERATIONAL OUT 31.11.35.1—*6
+Y PCH FEED P.U. 32.13.33.1
PCH ADAPT
-A RP Y Y 21BB 1D18 CEY- 02 2G
RESET
-O RP Y Y 21BB 1D18 CEY- 03 3G
LATCH
I RP Y Y 21BB 1C21 Z6P- 05 4G
-AO RP Y Y 21BF 1G17 D6W- 01 6G
+Y RESET PCH COMMD.BUSY LAT 32.13.02.1
32.13.21.1
32.13.42.1
+Y PCH FEEDING 32.31.07.1—*7
-Y MACH RESET RDR-PCH 32.20.01.1—*8
-IO RP Y Y 21BB 1C21 Z6P- 02 3H
I RP Y Y 21BB 1F21 DHB- 06 5H
+Y PCH ADAPTER RESET 1 32.13.12.1
32.13.14.1
-Y PCH ADAPTER RESET 32.13.31.1
-IO RP Y Y 21BF 1E21 DHB- 05 6J

*1—21B1F03B
*7—21B1T30B
*B—21B1H32E

*2—21B1F02E
*8—21B1T12D
—21B4F03E

*3—21B1F03C
*9—21B1G01D
*C—21B1H32F

*4—21B1F04P
—CERPA053
—21B4F03F

*5—21B1F02D
*A—21B1F06H

*6—21B1F03F
—21A1F02H

MDM.5060 COMMENTS

TAG	DATE	E.C.NO.	TAG	DATE	E.C.NO.	TAG	DATE	E.C.NO.	TAG	DATE	E.C.NO.
A	09-01-64	121550K	B	10-15-64	121567	C	02-15-65	121594	D	06-22-65	124265
E	12-21-65	125616	F	03-10-66	125633						

E-4

826846 PUNCH ADDRESS (PLUGGABLE CARDS) 32.13.12.0

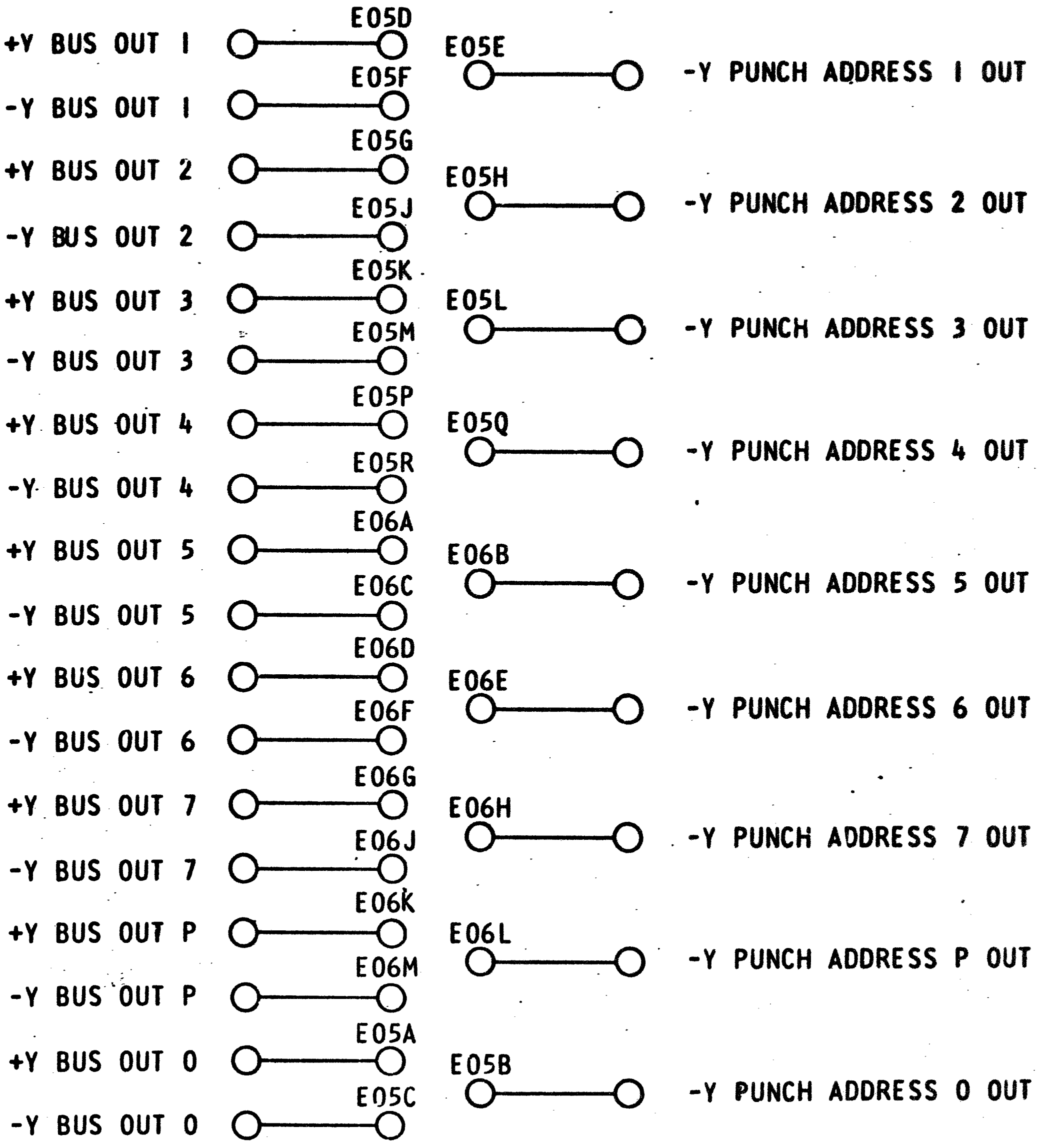
+Y BUS OUT 1
E05D
E05E
-Y PUNCH ADDRESS 1 OUT
-Y BUS OUT 1
E05F
+Y BUS OUT 2
E05G
E05H
-Y PUNCH ADDRESS 2 OUT
-Y BUS OUT 2
E05J
+Y BUS OUT 3
E05K
E05L
-Y PUNCH ADDRESS 3 OUT
-Y BUS OUT 3
E05M
+Y BUS OUT 4
E05P
E05Q
-Y PUNCH ADDRESS 4 OUT
-Y BUS OUT 4
E05R
+Y BUS OUT 5
E06A
E06B
-Y PUNCH ADDRESS 5 OUT
-Y BUS OUT 5
E06C
+Y BUS OUT 6
E06D
E06E
-Y PUNCH ADDRESS 6 OUT
-Y BUS OUT 6
E06F
+Y BUS OUT 7
E06G
E06H
-Y PUNCH ADDRESS 7 OUT
-Y BUS OUT 7
E06J
+Y BUS OUT P
E06K
E06L
-Y PUNCH ADDRESS P OUT
-Y BUS OUT P
E06M
+Y BUS OUT 0
E05A
E05B
-Y PUNCH ADDRESS 0 OUT
-Y BUS OUT 0
E05C

CHASSIS 21B1

TO RECOGNIZE CORRECT ADDRESS
JUMPER:

-Y BUS OUT TO -Y PCH ADD OUT FOR
THOSE BITS WHICH SHOULD BE PRESENT.

JUMPER:

+Y BUS OUT TO -Y PCH ADD OUT FOR
THOSE BITS WHICH SHOULD NOT BE PRESENT.

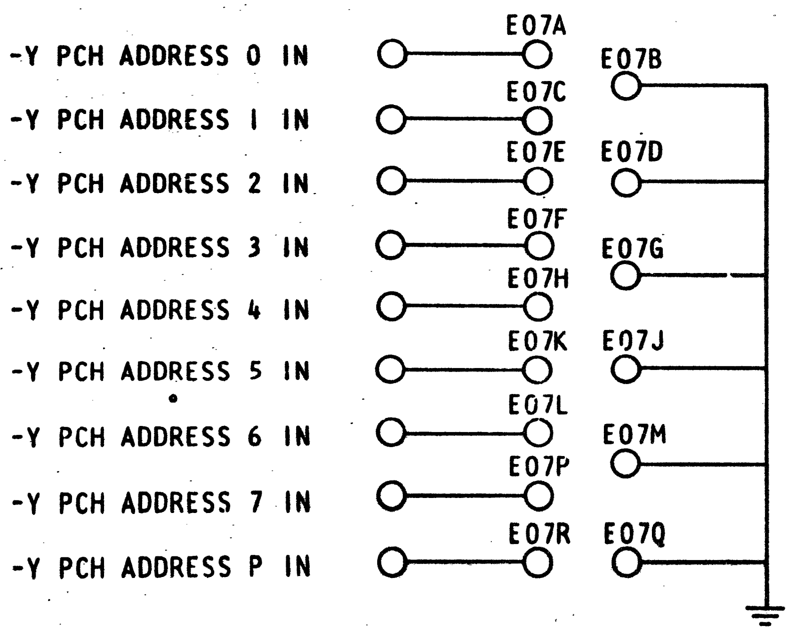
-Y PCH ADDRESS 0 IN
E07A
E07B
-Y PCH ADDRESS 1 IN
E07C
-Y PCH ADDRESS 2 IN
E07E
E07D
-Y PCH ADDRESS 3 IN
E07F
E07G
-Y PCH ADDRESS 4 IN
E07H
-Y PCH ADDRESS 5 IN
E07K
E07J
-Y PCH ADDRESS 6 IN
E07L
E07M
-Y PCH ADDRESS 7 IN
E07P
-Y PCH ADDRESS P IN
E07R
E07Q

TO GENERATE ADDRESS:

ALLOW -Y PCH ADDRESS IN LINES TO FLOAT.
FOR THOSE BITS WHICH SHOULD BE PRESENT.

JUMPER OTHER LINES TO GROUND

216259 MALE CONTACT STRIP TO BE USED
FOR JUMPERING.

DATE	EC NO	DATE	EC NO	DATE	EC NO
4-10-64	121550K				

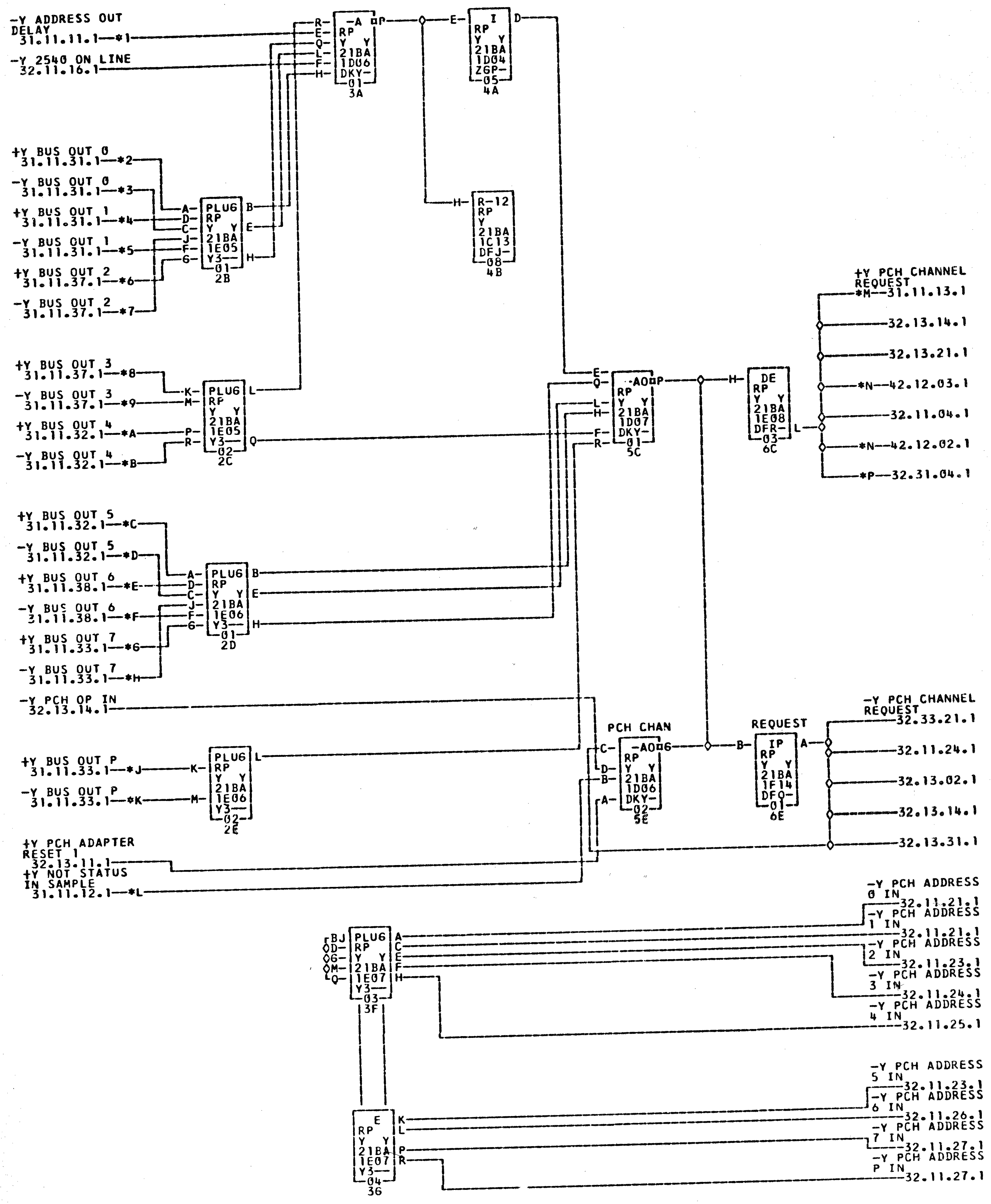
-Y ADDRESS OUT DELAY 31.11.11.1—*1
-Y 2540 ON LINE 32.11.16.1
+Y BUS OUT 0 31.11.31.1—*2
-Y BUS OUT 0 31.11.31.1—*3
+Y BUS OUT 1 31.11.31.1—*4
-Y BUS OUT 1 31.11.31.1—*5
+Y BUS OUT 2 31.11.37.1—*6
-Y BUS OUT 2 31.11.37.1—*7
+Y BUS OUT 3 31.11.37.1—*8
-Y BUS OUT 3 31.11.37.1—*9
+Y BUS OUT 4 31.11.32.1—*A
-Y BUS OUT 4 31.11.32.1—*B
+Y BUS OUT 5 31.11.32.1—*C
-Y BUS OUT 5 31.11.32.1—*D
+Y BUS OUT 6 31.11.38.1—*E
-Y BUS OUT 6 31.11.38.1—*F
+Y BUS OUT 7 31.11.33.1—*G
-Y BUS OUT 7 31.11.33.1—*H
-Y PCH OP IN 32.13.14.1
+Y BUS OUT P 31.11.33.1—*J
-Y BUS OUT P 31.11.33.1—*K
+Y PCH ADAPTER RESET 1 32.13.11.1
+Y NOT STATUS IN SAMPLE 31.11.12.1—*L
-A RP Y Y 21BA 1D06 DKY- 01 3A
I RP Y Y 21BA 1D04 ZGP- 05 4A
R-12 RP Y 21BA 1C13 DFJ- 08 4B
PLUG RP Y Y 21BA 1E05 Y3- 01 2B
PLUG RP Y Y 21BA 1E05 Y3- 02 2C
PLUG RP Y Y 21BA 1E06 Y3- 01 2D
PLUG RP Y Y 21BA 1E06 Y3- 02 2E
-AO RP Y Y 21BA 1D07 DKY- 01 5C
DE RP Y Y 21BA 1E08 DFR- 03 6C
PCH CHAN
-AO RP Y Y 21BA 1D06 DKY- 02 5E
REQUEST
IP RP Y Y 21BA 1F14 DFQ- 01 6E
PLUG RP Y Y 21BA 1E07 Y3- 03 3F
E RP Y Y 21BA 1E07 Y3- 04 3G
+Y PCH CHANNEL REQUEST *M—31.11.13.1
32.13.14.1
32.13.21.1
*N—42.12.03.1
32.11.04.1
*N—42.12.02.1
*P—32.31.04.1
-Y PCH CHANNEL REQUEST 32.33.21.1
32.11.24.1
32.13.02.1
32.13.14.1
32.13.31.1
-Y PCH ADDRESS 0 IN 32.11.21.1
-Y PCH ADDRESS 1 IN 32.11.21.1
-Y PCH ADDRESS 2 IN 32.11.23.1
-Y PCH ADDRESS 3 IN 32.11.24.1
-Y PCH ADDRESS 4 IN 32.11.25.1
-Y PCH ADDRESS 5 IN 32.11.23.1
-Y PCH ADDRESS 6 IN 32.11.26.1
-Y PCH ADDRESS 7 IN 32.11.27.1
-Y PCH ADDRESS P IN 32.11.27.1

*1—21B1F03K
*7—21B1F01N
*D—21B1F01R
*K—21B1F02C
*P—21B1D01B

*2—21B1F01A
*8—21B1F01D
*E—21B1F016
*L—21B1F03R
———21B3A01B

*3—21B1F01L
*9—21B1F01P
*F—21B1F02A
*M—21B1F06F

*4—21B1F01B
*A—21B1F01E
*6—21B1F01H
———21A1F02F

*5—21B1F01M
*B—21B1F01Q
*H—21B1F02B
*N—21B1H326

*6—21B1F01C
*C—21B1F01F
*J—21B1F01K
———21B4F03G

COMMENTS

FSD.505
FOR PLUG CARDS,REFER TO 32.13.12.0

TAG	DATE	E.C.NO.	TAG	DATE	E.C.NO.	TAG	DATE	E.C.NO.	TAG	DATE	E.C.NO.
A	09-01-64	121550K	B	10-15-64	121567	C	11-09-64	121572	D	01-08-65	121583
E	06-22-65	124265									

2-1

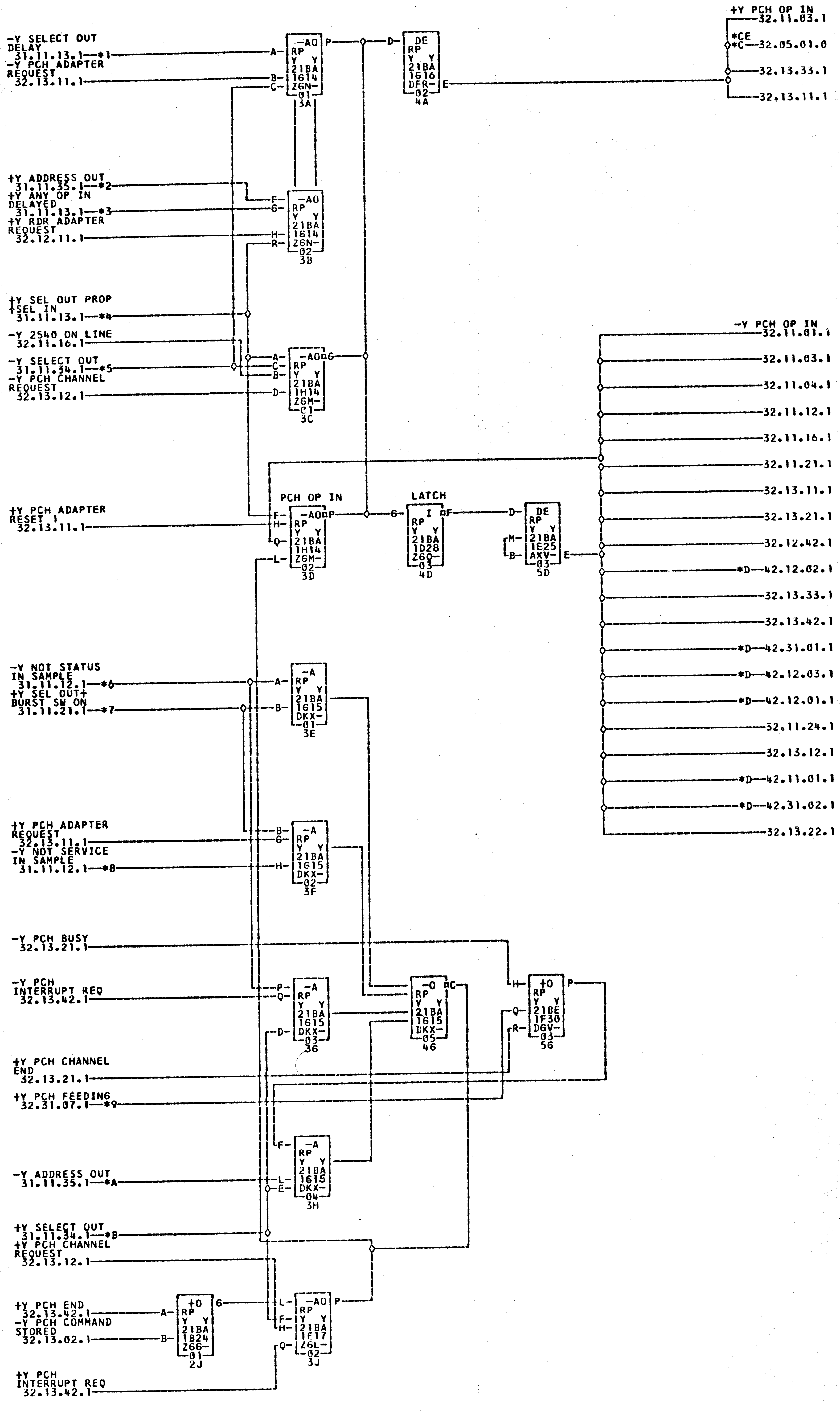
+Y PCH OP IN
32.11.03.1
*CE
*C—32.05.01.0
32.13.33.1
32.13.11.1
-Y SELECT OUT
DELAY
31.11.13.1—*1
-Y PCH ADAPTER
REQUEST
32.13.11.1
-AO
RP
Y Y
21BA
1614
Z6N-
01
3A
DE
RP
Y Y
21BA
1616
DFR-
02
4A
+Y ADDRESS OUT
31.11.35.1—*2
+Y ANY OP IN
DELAYED
31.11.13.1—*3
+Y RDR ADAPTER
REQUEST
32.12.11.1
-AO
RP
Y Y
21BA
1614
Z6N-
02
3B
+Y SEL OUT PROP
+SEL IN
31.11.13.1—*4
-Y 2540 ON LINE
32.11.16.1
-Y SELECT OUT
31.11.34.1—*5
-Y PCH CHANNEL
REQUEST
32.13.12.1
-AO
RP
Y Y
21BA
1H14
Z6M-
C1
3C
-Y PCH OP IN
32.11.01.1
32.11.03.1
32.11.04.1
32.11.12.1
32.11.16.1
32.11.21.1
32.13.11.1
32.13.21.1
32.12.42.1
*D—42.12.02.1
32.13.33.1
32.13.42.1
*D—42.31.01.1
*D—42.12.03.1
*D—42.12.01.1
32.11.24.1
32.13.12.1
*D—42.11.01.1
*D—42.31.02.1
32.13.22.1
PCH OP IN
+Y PCH ADAPTER
RESET 1
32.13.11.1
-AO
RP
Y Y
21BA
1H14
Z6M-
02
3D
LATCH
I
RP
Y Y
21BA
1D28
Z6Q-
03
4D
DE
RP
Y Y
21BA
1E25
AXV-
03
5D
-Y NOT STATUS
IN SAMPLE
31.11.12.1—*6
+Y SEL OUT+
BURST SW ON
31.11.21.1—*7
-A
RP
Y Y
21BA
1615
DKX-
01
3E
+Y PCH ADAPTER
REQUEST
32.13.11.1
-Y NOT SERVICE
IN SAMPLE
31.11.12.1—*8
-A
RP
Y Y
21BA
1615
DKX-
02
3F
-Y PCH BUSY
32.13.21.1
-Y PCH
INTERRUPT REQ
32.13.42.1
-A
RP
Y Y
21BA
1615
DKX-
03
3G
-O
RP
Y Y
21BA
1615
DKX-
05
4G
+O
RP
Y Y
21BE
1F30
D6V-
03
5G
+Y PCH CHANNEL
END
32.13.21.1
+Y PCH FEEDING
32.31.07.1—*9
-A
RP
Y Y
21BA
1615
DKX-
04
3H
-Y ADDRESS OUT
31.11.35.1—*A
+Y SELECT OUT
31.11.34.1—*B
+Y PCH CHANNEL
REQUEST
32.13.12.1
+Y PCH END
32.13.42.1
-Y PCH COMMAND
STORED
32.13.02.1
+O
RP
Y Y
21BA
1B24
Z66-
01
2J
-AO
RP
Y Y
21BA
1E17
Z6L-
02
3J
+Y PCH
INTERRUPT REQ
32.13.42.1

*1—21B1F03E
*7—21B1F03A
———CERPA058

*2—21B1F036
*8—21B1F04C
*D—21B1h32K

*3—21B1F04H
*9—21B1T30B
———21B4F03K

*4—21B1F03B
*A—21B1F03H

*5—21B1F03D
*B—21B1F03C

*6—21B1F03Q
*C—21B1601B

FSD.505

COMMENTS

TAG	DATE	E.C.NO.	TAG	DATE	E.C.NO.	TAG	DATE	E.C.NO.	TAG	DATE	E.C.NO.
A	09-01-64	121550K	B	10-15-64	121567	C	12-19-64	121583	D	02-15-65	121594
E	03-18-65	121598	F	06-22-65	124265						

PCH BUSY PCH CHANNEL END

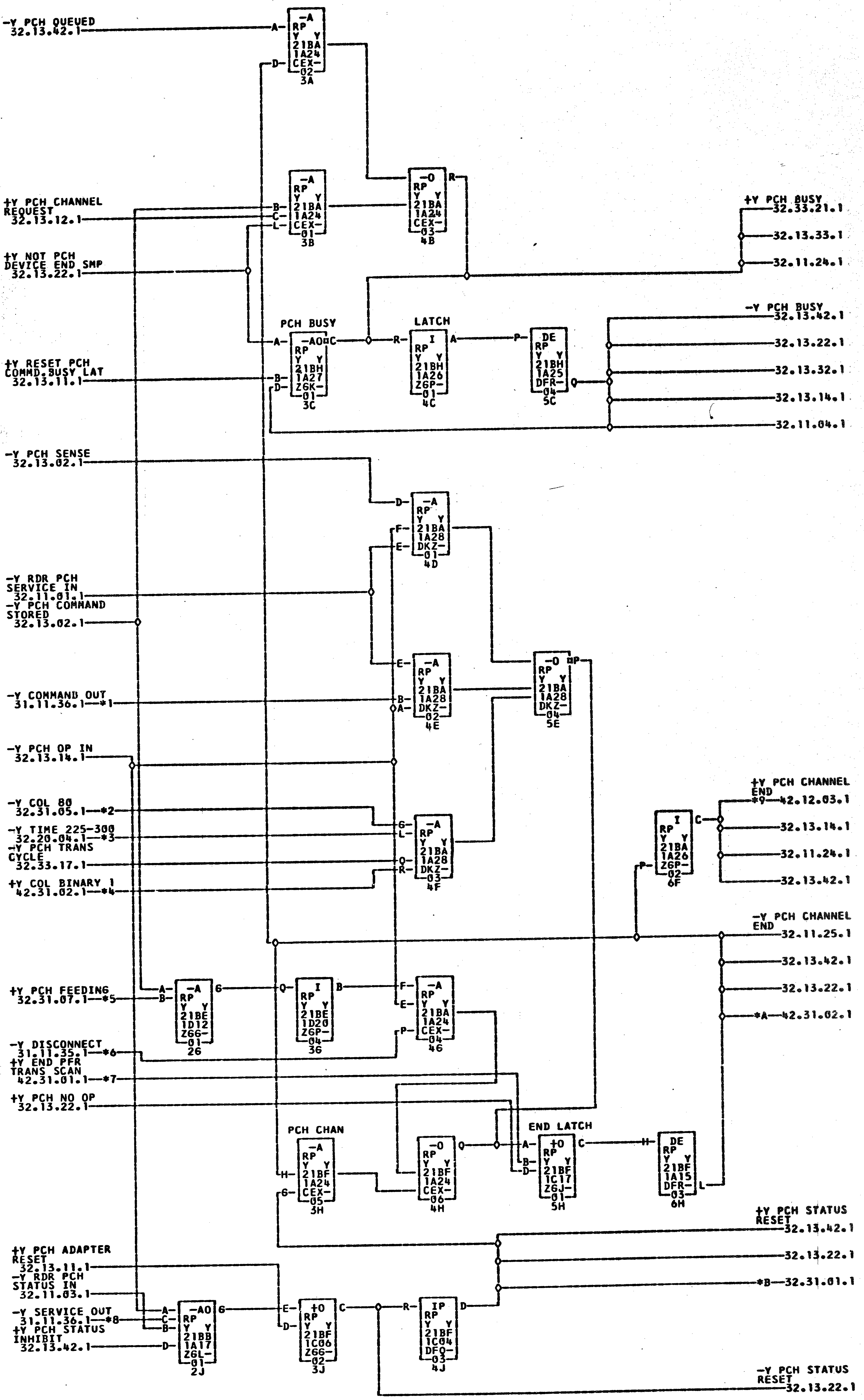
-Y PCH QUEUED 32.13.42.1
-A RP Y Y 21BA 1A24 CEX- 02 3A
+Y PCH CHANNEL REQUEST 32.13.12.1
-A RP Y Y 21BA 1A24 CEX- 01 3B
-O RP Y Y 21BA 1A24 CEX- 03 4B
+Y NOT PCH DEVICE END SMP 32.13.22.1
+Y PCH BUSY 32.33.21.1
32.13.33.1
32.11.24.1
PCH BUSY
-AO RP Y Y 21BH 1A27 Z6K- 01 3C
LATCH
I RP Y Y 21BH 1A26 Z6P- 01 4C
DE RP Y Y 21BH 1A25 DFR- 04 5C
+Y RESET PCH COMMD.BUSY LAT 32.13.11.1
-Y PCH BUSY 32.13.42.1
32.13.22.1
32.13.32.1
32.13.14.1
32.11.04.1
-Y PCH SENSE 32.13.02.1
-A RP Y Y 21BA 1A28 DKZ- 01 4D
-Y RDR PCH SERVICE IN 32.11.01.1
-Y PCH COMMAND STORED 32.13.02.1
-A RP Y Y 21BA 1A28 DKZ- 02 4E
-O RP Y Y 21BA 1A28 DKZ- 04 5E
-Y COMMAND OUT 31.11.36.1—*1
-Y PCH OP IN 32.13.14.1
-Y COL 80 32.31.05.1—*2
-Y TIME 225-300 32.20.04.1—*3
-Y PCH TRANS CYCLE 32.33.17.1
+Y COL BINARY 1 42.31.02.1—*4
-A RP Y Y 21BA 1A28 DKZ- 03 4F
I RP Y Y 21BA 1A26 Z6P- 02 6F
+Y PCH CHANNEL END *9—42.12.03.1
32.13.14.1
32.11.24.1
32.13.42.1
-Y PCH CHANNEL END 32.11.25.1
32.13.42.1
32.13.22.1
*A—42.31.02.1
+Y PCH FEEDING 32.31.07.1—*5
-A RP Y Y 21BE 1D12 Z66- 01 2G
I RP Y Y 21BE 1D20 Z6P- 04 3G
-A RP Y Y 21BA 1A24 CEX- 04 4G
-Y DISCONNECT 31.11.35.1—*6
+Y END PFR TRANS SCAN 42.31.01.1—*7
+Y PCH NO OP 32.13.22.1
PCH CHAN
-A RP Y Y 21BF 1A24 CEX- 05 3H
-O RP Y Y 21BF 1A24 CEX- 06 4H
END LATCH
+O RP Y Y 21BF 1C17 Z6J- 01 5H
DE RP Y Y 21BF 1A15 DFR- 03 6H
+Y PCH STATUS RESET 32.13.42.1
32.13.22.1
*B—32.31.01.1
+Y PCH ADAPTER RESET 32.13.11.1
-Y RDR PCH STATUS IN 32.11.03.1
-Y SERVICE OUT 31.11.36.1—*8
+Y PCH STATUS INHIBIT 32.13.42.1
-AO RP Y Y 21BB 1A17 Z6L- 01 2J
+O RP Y Y 21BF 1C06 Z66- 02 3J
IP RP Y Y 21BF 1C04 DFQ- 03 4J
-Y PCH STATUS RESET 32.13.22.1

*1—21B1F02L
*7—21B1632Q
*B—21B1T32B

*2—21B1T13A
*8—21B1F02Q
——21B3T32B

*3—21B1T03B
*9—21B1H32M

*4—21B1F32R
——21B4F03M

*5—21B1T30B
*A—21B1A32H

*6—21B1F04N
——21B4D02H

COMMENTS

TAG	DATE	E.C.NO.	TAG	DATE	E.C.NO.	TAG	DATE	E.C.NO.	TAG	DATE	E.C.NO.
A	09-01-64	121550K	B	10-15-64	121567	C	11-09-64	121572	D	12-19-64	121583
E	03-18-65	121598	F	05-26-65	124248	G	11-18-65	125601	H	03-10-66	125633

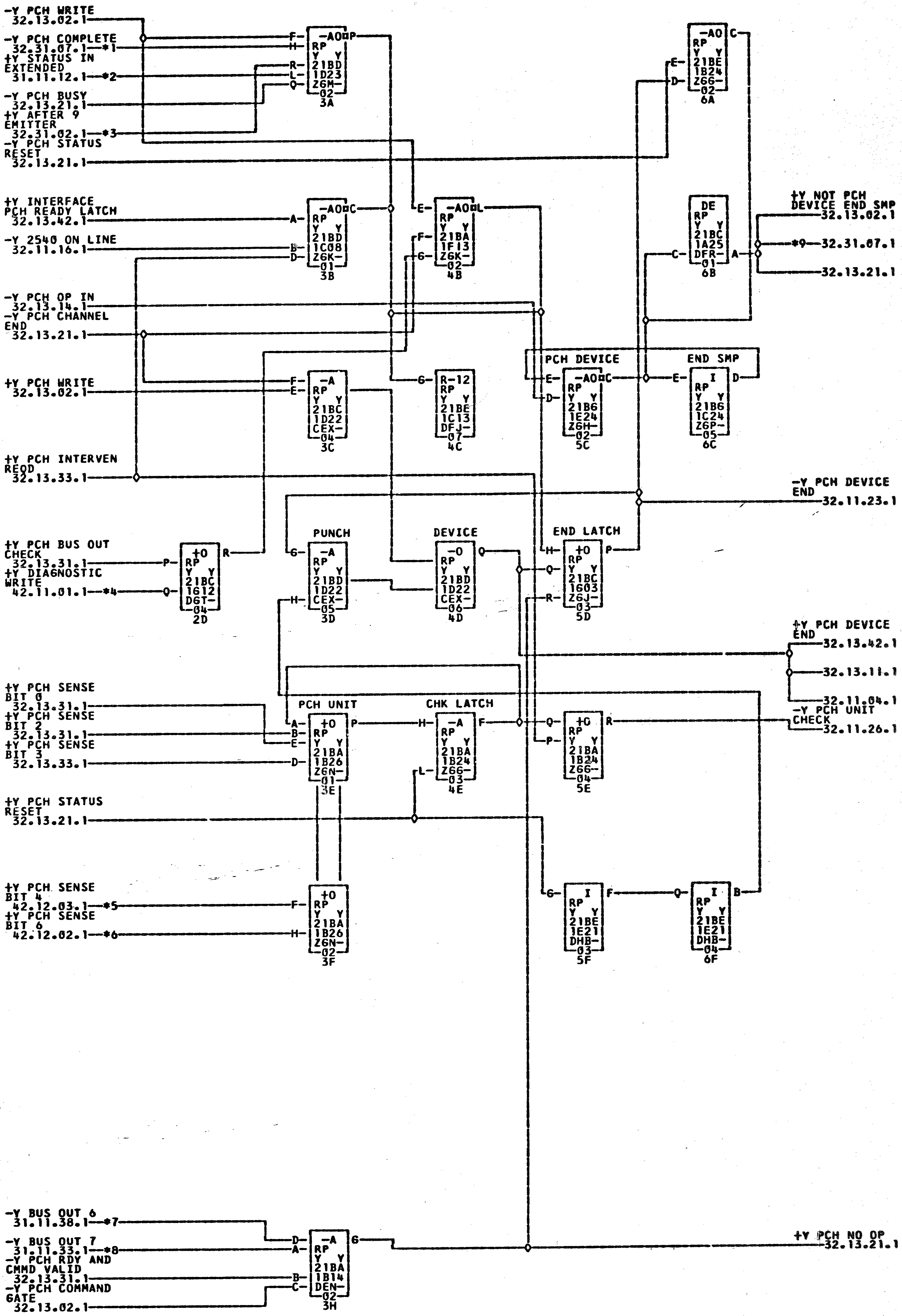
-Y PCH WRITE 32.13.02.1
-Y PCH COMPLETE 32.31.07.1 *1
+Y STATUS IN EXTENDED 31.11.12.1 *2
-Y PCH BUSY 32.13.21.1
+Y AFTER 9 EMITTER 32.31.02.1 *3
-Y PCH STATUS RESET 32.13.21.1
+Y INTERFACE PCH READY LATCH 32.13.42.1
-Y 2540 ON LINE 32.11.16.1
-Y PCH OP IN 32.13.14.1
-Y PCH CHANNEL END 32.13.21.1
+Y PCH WRITE 32.13.02.1
+Y PCH INTERVEN REQD 32.13.33.1
+Y PCH BUS OUT CHECK 32.13.31.1
+Y DIAGNOSTIC WRITE 42.11.01.1 *4
+Y PCH SENSE BIT 0 32.13.31.1
+Y PCH SENSE BIT 2 32.13.31.1
+Y PCH SENSE BIT 3 32.13.33.1
+Y PCH STATUS RESET 32.13.21.1
+Y PCH SENSE BIT 4 42.12.03.1 *5
+Y PCH SENSE BIT 6 42.12.02.1 *6
-Y BUS OUT 6 31.11.38.1 *7
-Y BUS OUT 7 31.11.33.1 *8
-Y PCH RDY AND CMMD VALID 32.13.31.1
-Y PCH COMMAND GATE 32.13.02.1
-AO RP 21BD 1D23 Z6H 02 3A
-AO RP 21BD 1C08 Z6K 01 3B
-A RP 21BC 1D22 CEX 04 3C
+O RP 21BC 1G12 D6T 04 2D
PUNCH -A RP 21BD 1D22 CEX 05 3D
PCH UNIT +O RP 21BA 1B26 Z6N 01 3E
+O RP 21BA 1B26 Z6N 02 3F
-A RP 21BA 1B14 DEN 02 3H
-AO RP 21BA 1F13 Z6K 02 4B
R-12 RP 21BE 1C13 DFJ 07 4C
DEVICE -O RP 21BD 1D22 CEX 06 4D
CHK LATCH -A RP 21BA 1B24 Z66 03 4E
PCH DEVICE -AO RP 21B6 1E24 Z6H 02 5C
END LATCH +O RP 21BC 1G03 Z6J 03 5D
+O RP 21BA 1B24 Z66 04 5E
I RP 21BE 1E21 DHB 03 5F
-AO RP 21BE 1B24 Z66 02 6A
DE RP 21BC 1A25 DFR 01 6B
END SMP I RP 21B6 1C24 Z6P 05 6C
I RP 21BE 1E21 DHB 04 6F
+Y NOT PCH DEVICE END SMP 32.13.02.1
*9 32.31.07.1
32.13.21.1
-Y PCH DEVICE END 32.11.23.1
+Y PCH DEVICE END 32.13.42.1
32.13.11.1
32.11.04.1
-Y PCH UNIT CHECK 32.11.26.1
+Y PCH NO OP 32.13.21.1

*1—21B1T26B *2—21B1F05N *3—21B1T29C *4—21B1A32C *5—21B1G32R *6—21B1E32E
*7—21B1F02A *8—21B1F02B *9—21B1T29B ———21B3T29B

COMMENTS
MDM.3020-4000-4061

TAG	DATE	E.C.NO.	TAG	DATE	E.C.NO.	TAG	DATE	E.C.NO.	TAG	DATE	E.C.NO.
A	09-01-64	121550K	B	10-15-64	121567	C	11-09-64	121572	D	04-26-65	124237
E	06-22-65	124265	F	11-18-65	125601	G	03-10-66	125633			

2-1

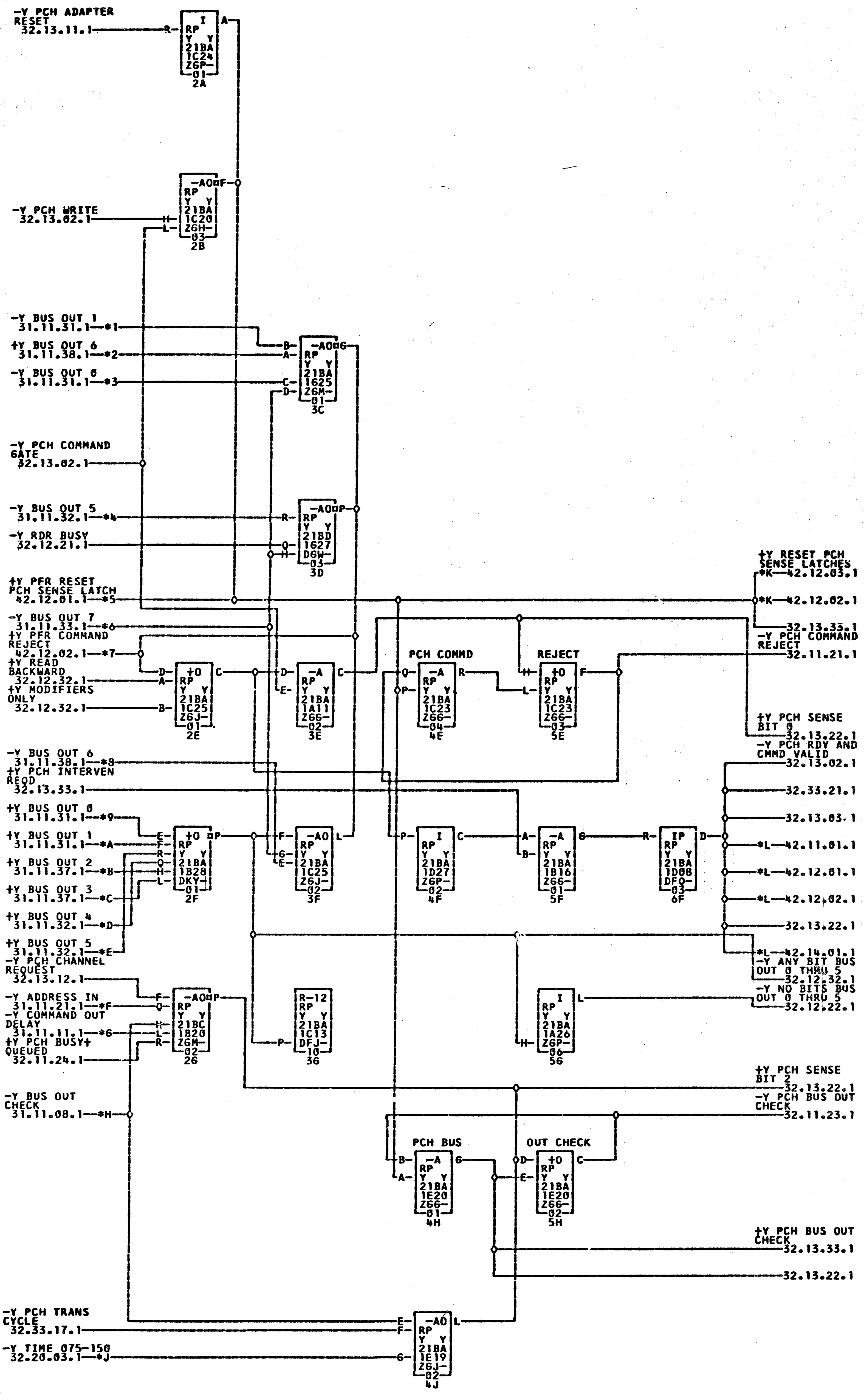
-Y PCH ADAPTER RESET 32.13.11.1
-Y PCH WRITE 32.13.02.1
-Y BUS OUT 1 31.11.31.1—*1
+Y BUS OUT 6 31.11.38.1—*2
-Y BUS OUT 0 31.11.31.1—*3
-Y PCH COMMAND GATE 32.13.02.1
-Y BUS OUT 5 31.11.32.1—*4
-Y RDR BUSY 32.12.21.1
+Y PFR RESET PCH SENSE LATCH 42.12.01.1—*5
-Y BUS OUT 7 31.11.33.1—*6
+Y PFR COMMAND REJECT 42.12.02.1—*7
+Y READ BACKWARD 32.12.32.1
+Y MODIFIERS ONLY 32.12.32.1
-Y BUS OUT 6 31.11.38.1—*8
+Y PCH INTERVEN REQD 32.13.33.1
+Y BUS OUT 0 31.11.31.1—*9
+Y BUS OUT 1 31.11.31.1—*A
+Y BUS OUT 2 31.11.37.1—*B
+Y BUS OUT 3 31.11.37.1—*C
+Y BUS OUT 4 31.11.32.1—*D
+Y BUS OUT 5 31.11.32.1—*E
-Y PCH CHANNEL REQUEST 32.13.12.1
-Y ADDRESS IN 31.11.21.1—*F
-Y COMMAND OUT DELAY 31.11.11.1—*G
+Y PCH BUSY+ QUEUED 32.11.24.1
-Y BUS OUT CHECK 31.11.08.1—*H
-Y PCH TRANS CYCLE 32.33.17.1
-Y TIME 075-150 32.20.03.1—*J
I RP Y Y 21BA 1C24 Z6P 01 2A
-AO RP Y Y 21BA 1C20 Z6H 03 2B
-AO RP Y Y 21BA 1G25 Z6M 01 3C
-AO RP Y Y 21BD 1G27 D6W 03 3D
+O RP Y Y 21BA 1C25 Z6J 01 2E
-A RP Y Y 21BA 1A11 Z66 02 3E
PCH COMMD
-A RP Y Y 21BA 1C23 Z66 04 4E
REJECT
+O RP Y Y 21BA 1C23 Z66 03 5E
+O RP Y Y 21BA 1B28 DKY 01 2F
-AO RP Y Y 21BA 1C25 Z6J 02 3F
I RP Y Y 21BA 1D27 Z6P 02 4F
-A RP Y Y 21BA 1B16 Z66 01 5F
IP RP Y Y 21BA 1D08 DFQ 03 6F
-AO RP Y Y 21BC 1B20 Z6M 02 2G
R-12 RP Y Y 21BA 1C13 DFJ 10 3G
I RP Y Y 21BA 1A26 Z6P 06 5G
PCH BUS
-A RP Y Y 21BA 1E20 Z66 01 4H
OUT CHECK
+O RP Y Y 21BA 1E20 Z6P 02 5H
-AO RP Y Y 21BA 1E19 Z6J 02 4J
+Y RESET PCH SENSE LATCHES
*K—42.12.03.1
*K—42.12.02.1
32.13.33.1
-Y PCH COMMAND REJECT 32.11.21.1
+Y PCH SENSE BIT 0 32.13.22.1
-Y PCH RDY AND CMMD VALID 32.13.02.1
32.33.21.1
32.13.03.1
*L—42.11.01.1
*L—42.12.01.1
*L—42.12.02.1
32.13.22.1
*L—42.14.01.1
-Y ANY BIT BUS OUT 0 THRU 5 32.12.32.1
-Y NO BITS BUS OUT 0 THRU 5 32.12.22.1
+Y PCH SENSE BIT 2 32.13.22.1
-Y PCH BUS OUT CHECK 32.11.23.1
+Y PCH BUS OUT CHECK 32.13.33.1
32.13.22.1

*1—21B1F01M *2—21B1F01G *3—21B1F01L *4—21B1F01R *5—21B1G326 *6—21B1F02B
*7—21B1C32R *8—21B1F02A *9—21B1F01A *A—21B1F01B *B—21B1F01C *C—21B1F01D
*D—21B1F01E *E—21B1F01F *F—21B1F03N *G—21B1F02H *H—21B1F046 *J—21B1T01C
*K—21B1H32L ———21B4F03L *L—21B1E32C ———21B4C03C

MDM.3020-5060 COMMENTS

TAG	DATE	E.C.NO.	TAG	DATE	E.C.NO.	TAG	DATE	E.C.NO.	TAG	DATE	E.C.NO.
A	09-01-64	121550K	B	11-09-64	121572	C	12-19-64	121583	D	04-26-65	124237
E	08-18-65	124270	F	03-10-66	125633						

2-1

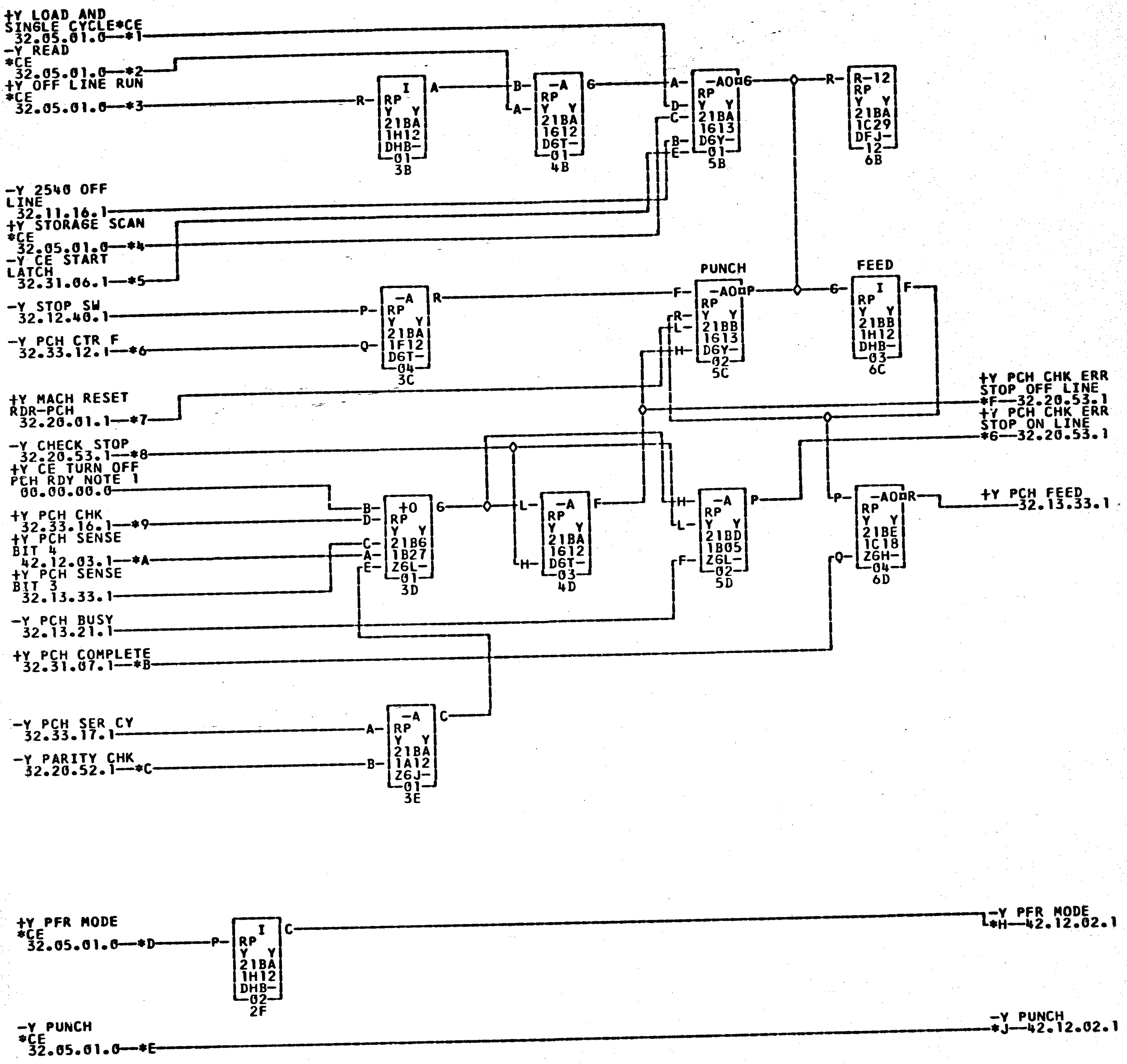
+Y LOAD AND SINGLE CYCLE*CE 32.05.01.0—*1
-Y READ *CE 32.05.01.0—*2
+Y OFF LINE RUN *CE 32.05.01.0—*3
-Y 2540 OFF LINE 32.11.16.1
+Y STORAGE SCAN *CE 32.05.01.0—*4
-Y CE START LATCH 32.31.06.1—*5
-Y STOP SW 32.12.40.1
-Y PCH CTR F 32.33.12.1—*6
+Y MACH RESET RDR-PCH 32.20.01.1—*7
-Y CHECK STOP 32.20.53.1—*8
+Y CE TURN OFF PCH RDY NOTE 1 00.00.00.0
+Y PCH CHK 32.33.16.1—*9
+Y PCH SENSE BIT 4 42.12.03.1—*A
+Y PCH SENSE BIT 3 32.13.33.1
-Y PCH BUSY 32.13.21.1
+Y PCH COMPLETE 32.31.07.1—*B
-Y PCH SER CY 32.33.17.1
-Y PARITY CHK 32.20.52.1—*C
I RP Y Y 21BA 1H12 DHB- 01 3B
-A RP Y Y 21BA 1612 D6T- 01 4B
-AO RP Y Y 21BA 1613 D6Y- 01 5B
R-12 RP Y Y 21BA 1C29 DFJ- 12 6B
PUNCH
-AO RP Y Y 21BB 1613 D6Y- 02 5C
FEED
I RP Y Y 21BB 1H12 DHB- 03 6C
-A RP Y Y 21BA 1F12 D6T- 04 3C
+O RP Y Y 21B6 1B27 Z6L- 01 3D
-A RP Y Y 21BA 1612 D6T- 03 4D
-A RP Y Y 21BD 1B05 Z6L- 02 5D
-AO RP Y Y 21BE 1C18 Z6H- 04 6D
-A RP Y Y 21BA 1A12 Z6J- 01 3E
+Y PCH CHK ERR STOP OFF LINE *F—32.20.53.1
+Y PCH CHK ERR STOP ON LINE *6—32.20.53.1
+Y PCH FEED 32.13.33.1
+Y PFR MODE *CE 32.05.01.0—*D
I RP Y Y 21BA 1H12 DHB- 02 2F
-Y PFR MODE *H—42.12.02.1
-Y PUNCH *CE 32.05.01.0—*E
-Y PUNCH *J—42.12.02.1

*1—21B1H01D
*7—21B1T17A
*D—21B1H01C
*H—21B1H32H

*2—21B1E01E
*8—21B1T25C
*E—21B1E01F
———21B4F03H

*3—21B1H01E
*9—21B1T25D
*F—21B1D01C
*J—21B1632D

*4—21B1H01B
*A—21B1632R
———21B3A01C
———21B4E03D

*5—21B1T16C
*B—21B1T19B
*6—21B1T28B

*6—21B1T15B
*C—21B1T28D
———21B3T28B

COMMENTS

NOTE 1 TO BE USED BY F.E. TO TURN OFF PUNCH READY

TAG	DATE	E.C.NO.	TAG	DATE	E.C.NO.	TAG	DATE	E.C.NO.	TAG	DATE	E.C.NO.
A	09-01-64	121550K	B	10-15-64	121567	C	11-09-64	121572	D	12-19-64	121583
E	02-15-65	121594	F	03-18-65	121598	G	04-26-65	124237	H	06-22-65	124265

2-1

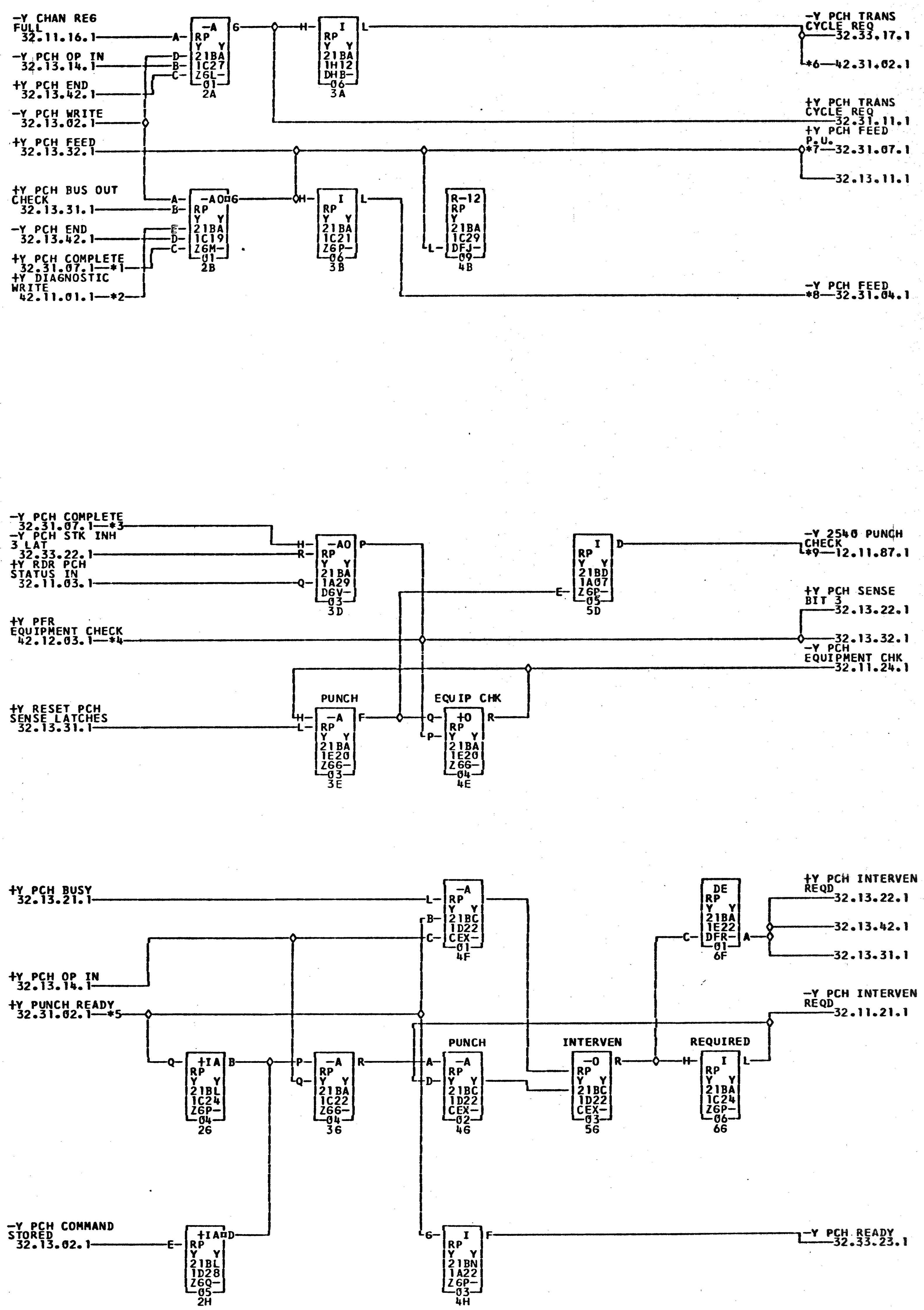
-Y CHAN REG FULL 32.11.16.1
-Y PCH OP IN 32.13.14.1
+Y PCH END 32.13.42.1
-Y PCH WRITE 32.13.02.1
+Y PCH FEED 32.13.32.1
A
D
B
C
-A
RP
Y Y
21BA
1C27
ZGL-
01
2A
G
H
I
RP
Y Y
21BA
1H12
DHB-
06
3A
L
-Y PCH TRANS CYCLE REQ 32.33.17.1
*6—42.31.02.1
+Y PCH TRANS CYCLE REQ 32.31.11.1
+Y PCH FEED P.U. *7—32.31.07.1
32.13.11.1
+Y PCH BUS OUT CHECK 32.13.31.1
-Y PCH END 32.13.42.1
+Y PCH COMPLETE 32.31.07.1—*1
+Y DIAGNOSTIC WRITE 42.11.01.1—*2
-AO
RP
Y Y
21BA
1C19
Z6M-
01
2B
I
RP
Y Y
21BA
1C21
Z6P-
06
3B
R-12
RP
Y
21BA
1C29
DFJ-
09
4B
-Y PCH FEED *8—32.31.04.1
-Y PCH COMPLETE 32.31.07.1—*3
-Y PCH STK INH 3 LAT 32.33.22.1
+Y RDR PCH STATUS IN 32.11.03.1
-AO
RP
Y Y
21BA
1A29
D6V-
03
3D
P
I
RP
Y Y
21BD
1A07
Z6P-
05
5D
D
E
-Y 2540 PUNCH CHECK *9—12.11.87.1
+Y PCH SENSE BIT 3 32.13.22.1
32.13.32.1
+Y PFR EQUIPMENT CHECK 42.12.03.1—*4
-Y PCH EQUIPMENT CHK 32.11.24.1
+Y RESET PCH SENSE LATCHES 32.13.31.1
PUNCH
-A
RP
Y Y
21BA
1E20
Z66-
03
3E
F
EQUIP CHK
+O
RP
Y Y
21BA
1E20
Z66-
04
4E
Q
P
R
+Y PCH BUSY 32.13.21.1
+Y PCH OP IN 32.13.14.1
+Y PUNCH READY 32.31.02.1—*5
-A
RP
Y Y
21BC
1D22
CEX-
01
4F
DE
RP
Y Y
21BA
1E22
DFR-
01
6F
+Y PCH INTERVEN REQD 32.13.22.1
32.13.42.1
32.13.31.1
-Y PCH INTERVEN REQD 32.11.21.1
+IA
RP
Y Y
21BL
1C24
Z6P-
04
2G
-A
RP
Y Y
21BA
1C22
Z66-
04
3G
PUNCH
-A
RP
Y Y
21BC
1D22
CEX-
02
4G
INTERVEN
-O
RP
Y Y
21BC
1D22
CEX-
03
5G
REQUIRED
I
RP
Y Y
21BA
1C24
Z6P-
06
6G
-Y PCH COMMAND STORED 32.13.02.1
+IA
RP
Y Y
21BL
1D28
Z6Q-
05
2H
I
RP
Y Y
21BN
1A22
Z6P-
03
4H
-Y PCH READY 32.33.23.1

*1—21B1T19B
——21B4C03Q
——21B3T27D

*2—21B1A32C
*7—21B1D01L
——21B3H01C

*3—21B1T26R
——21B3A01L
——21C1C21C

*4—21B1C32C
*8—21B1T20B
——40A1C04C

*5—21B1T09A
——21B3T20B

*6—21B1E32Q
*9—21B1T27D

COMMENTS
MDM.3060-4060-5060-5061

TAG	DATE	E.C.NO.	TAG	DATE	E.C.NO.	TAG	DATE	E.C.NO.	TAG	DATE	E.C.NO.
A	09-01-64	121550K	B	10-15-64	121567	C	11-09-64	121572	D	02-15-65	121594
E	03-18-65	121598	F	04-26-65	124237	G	08-18-65	124270	H	10-11-65	125598
J	11-18-65	125601	K	12-21-65	125616	L	01-20-66	125617	M	06-23-66	125647
N	12-18-67	131803									

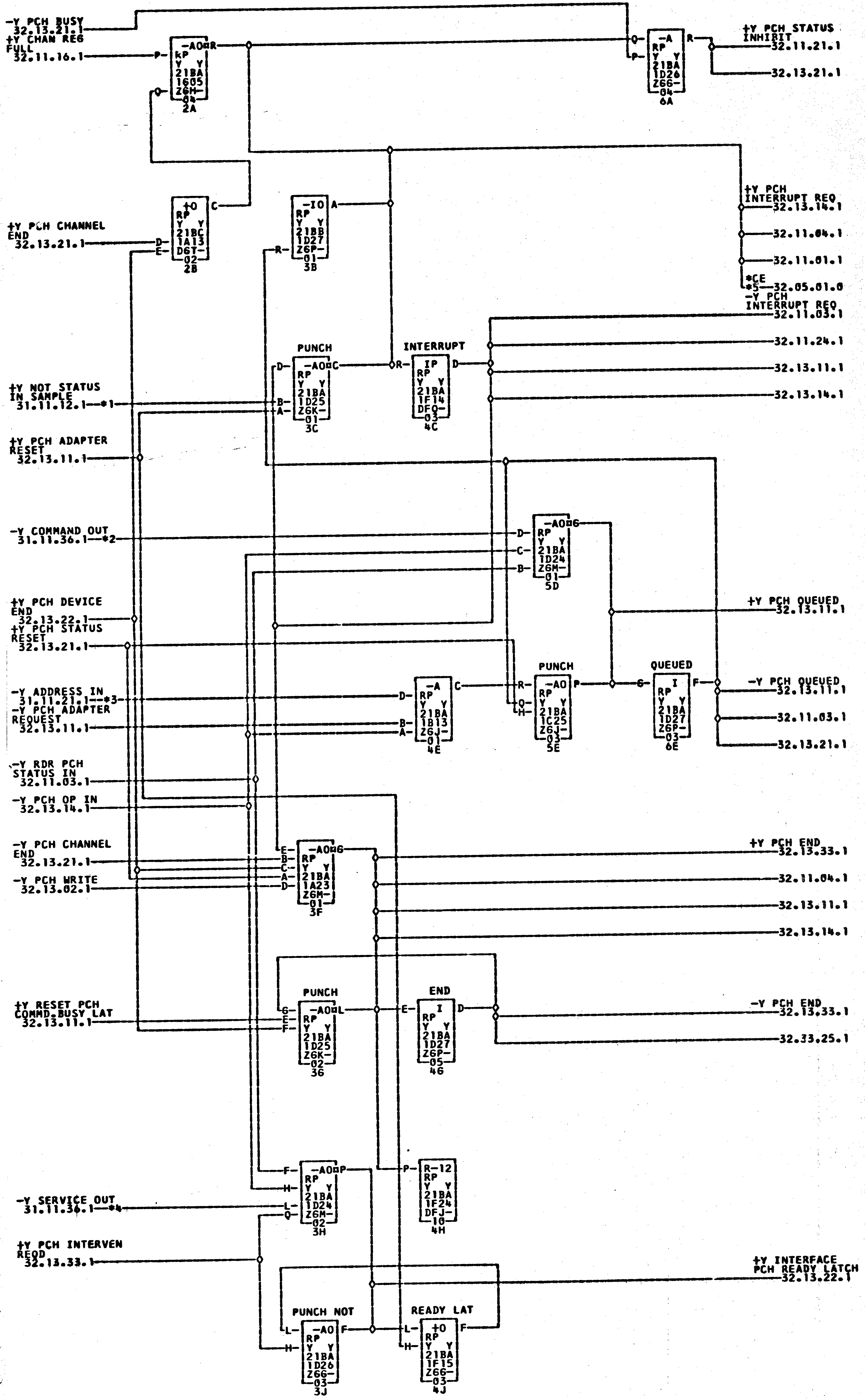
-Y PCH BUSY 32.13.21.1
+Y CHAN REG FULL 32.11.16.1
-AO R kP Y Y 21BA 1G05 Z6M- 04 2A
-A RP Y Y 21BA 1D26 Z6G- 04 6A
+Y PCH STATUS INHIBIT 32.11.21.1
32.13.21.1
+O RP Y Y 21BC 1A13 D6T- 02 2B
-IO RP Y Y 21BB 1D27 Z6P- 01 3B
+Y PCH CHANNEL END 32.13.21.1
+Y PCH INTERRUPT REQ 32.13.14.1
32.11.04.1
32.11.01.1
*CE *5 32.05.01.0
-Y PCH INTERRUPT REQ 32.11.03.1
32.11.24.1
32.13.11.1
32.13.14.1
PUNCH
-AO RP Y Y 21BA 1D25 Z6K- 01 3C
INTERRUPT
IP RP Y Y 21BA 1F14 DFQ- 03 4C
+Y NOT STATUS IN SAMPLE 31.11.12.1 *1
+Y PCH ADAPTER RESET 32.13.11.1
-Y COMMAND OUT 31.11.36.1 *2
-AO RP Y Y 21BA 1D24 Z6M- 01 5D
+Y PCH DEVICE END 32.13.22.1
+Y PCH STATUS RESET 32.13.21.1
+Y PCH QUEUED 32.13.11.1
-Y ADDRESS IN 31.11.21.1 *3
-Y PCH ADAPTER REQUEST 32.13.11.1
-A RP Y Y 21BA 1B13 Z6J- 01 4E
PUNCH
-AO RP Y Y 21BA 1C25 Z6J- 03 5E
QUEUED
I RP Y Y 21BA 1D27 Z6P- 03 6E
-Y PCH QUEUED 32.13.11.1
32.11.03.1
32.13.21.1
-Y RDR PCH STATUS IN 32.11.03.1
-Y PCH OP IN 32.13.14.1
-Y PCH CHANNEL END 32.13.21.1
-Y PCH WRITE 32.13.02.1
-AO RP Y Y 21BA 1A23 Z6M- 01 3F
+Y PCH END 32.13.33.1
32.11.04.1
32.13.11.1
32.13.14.1
+Y RESET PCH COMMD.BUSY LAT 32.13.11.1
PUNCH
-AO RP Y Y 21BA 1D25 Z6K- 02 3G
END
I RP Y Y 21BA 1D27 Z6P- 05 4G
-Y PCH END 32.13.33.1
32.33.25.1
-AO RP Y Y 21BA 1D24 Z6M- 02 3H
R-12 RP Y Y 21BA 1F24 DFJ- 10 4H
-Y SERVICE OUT 31.11.36.1 *4
+Y PCH INTERVEN REQD 32.13.33.1
+Y INTERFACE PCH READY LATCH 32.13.22.1
PUNCH NOT
-AO RP Y Y 21BA 1D26 Z6G- 03 3J
READY LAT
+O RP Y Y 21BA 1F15 Z6G- 03 4J

*1—21B1F03R *2—21B1F02L *3—21B1F03N *4—21B1F02Q *5—21B1G01F ——CERPA054

MDM.4060-4061-5060 COMMENTS

TAG	DATE	E.C.NO.	TAG	DATE	E.C.NO.	TAG	DATE	E.C.NO.	TAG	DATE	E.C.NO.
A	09-01-64	121550K	B	10-15-64	121567	C	11-09-64	121572	D	02-15-65	121594
E	03-18-65	121598	F	08-18-65	124270	G	12-21-65	125616	H	03-10-66	125633

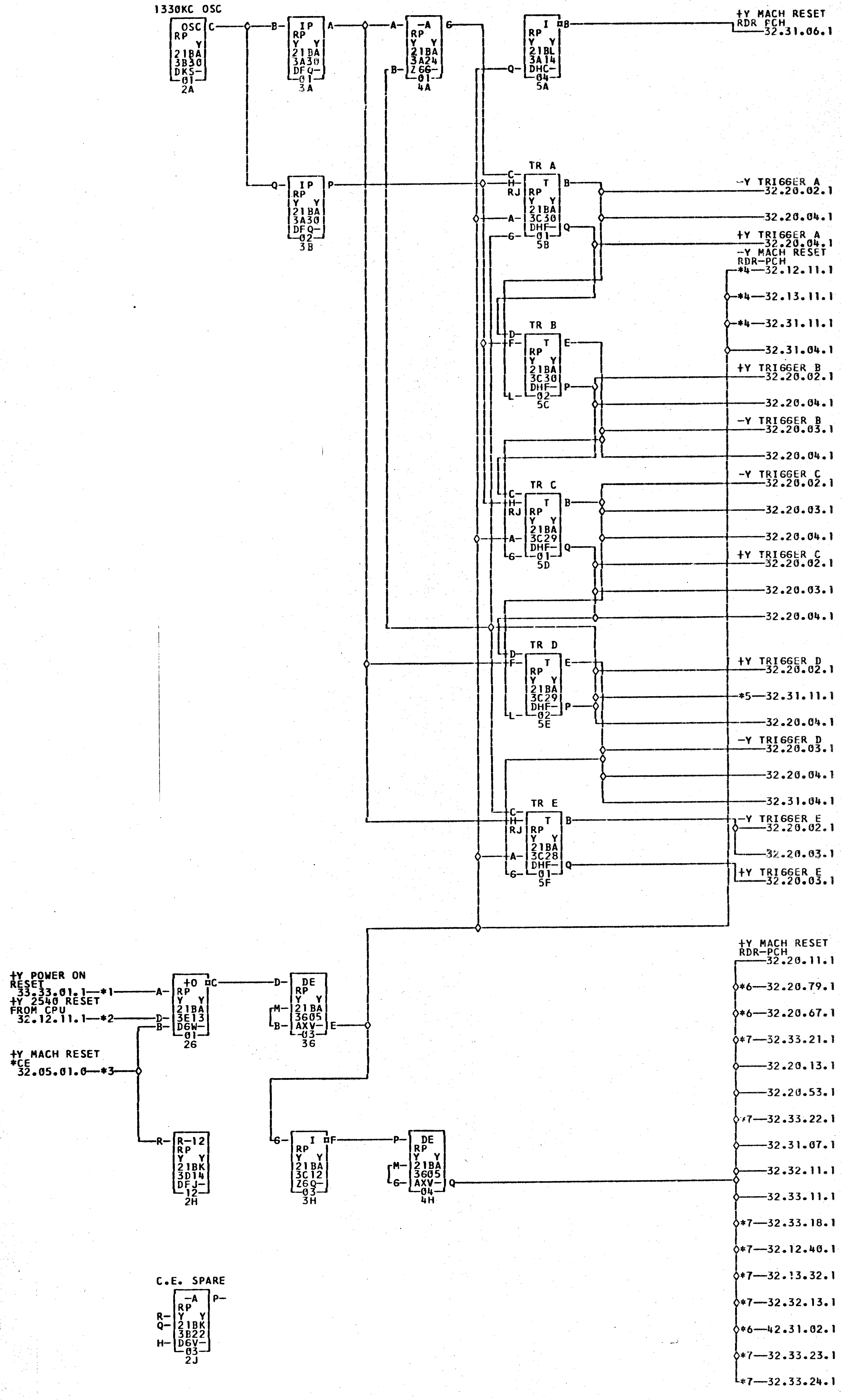
1330KC OSC
OSC RP Y 21BA 3B30 DKS- 01 2A
IP RP Y Y 21BA 3A30 DFQ- 01 3A
-A RP Y Y 21BA 3A24 Z66- 01 4A
I RP Y Y 21BL 3A14 DHC- 04 5A
+Y MACH RESET RDR PCH 32.31.06.1
IP RP Y Y 21BA 3A30 DFQ- 02 3B
TR A
T RP Y Y 21BA 3C30 DHF- 01 5B
-Y TRIGGER A 32.20.02.1
32.20.04.1
+Y TRIGGER A 32.20.04.1
-Y MACH RESET RDR-PCH
*4—32.12.11.1
*4—32.13.11.1
*4—32.31.11.1
32.31.04.1
TR B
T RP Y Y 21BA 3C30 DHF- 02 5C
+Y TRIGGER B 32.20.02.1
32.20.04.1
-Y TRIGGER B 32.20.03.1
32.20.04.1
TR C
T RP Y Y 21BA 3C29 DHF- 01 5D
-Y TRIGGER C 32.20.02.1
32.20.03.1
32.20.04.1
+Y TRIGGER C 32.20.02.1
32.20.03.1
32.20.04.1
TR D
T RP Y Y 21BA 3C29 DHF- 02 5E
+Y TRIGGER D 32.20.02.1
*5—32.31.11.1
32.20.04.1
-Y TRIGGER D 32.20.03.1
32.20.04.1
32.31.04.1
TR E
T RP Y Y 21BA 3C28 DHF- 01 5F
-Y TRIGGER E 32.20.02.1
32.20.03.1
+Y TRIGGER E 32.20.03.1
+Y POWER ON RESET 33.33.01.1—*1
+Y 2540 RESET FROM CPU 32.12.11.1—*2
+O RP Y Y 21BA 3E13 D6W- 01 26
DE RP Y Y 21BA 3605 AXV- 03 36
+Y MACH RESET *CE 32.05.01.0—*3
R-12 RP Y Y 21BK 3D14 DFJ- 12 2H
I RP Y Y 21BA 3C12 Z6Q- 03 3H
DE RP Y Y 21BA 3605 AXV- 04 4H
+Y MACH RESET RDR-PCH 32.20.11.1
*6—32.20.79.1
*6—32.20.67.1
*7—32.33.21.1
32.20.13.1
32.20.53.1
*7—32.33.22.1
32.31.07.1
32.32.11.1
32.33.11.1
*7—32.33.18.1
*7—32.12.40.1
*7—32.13.32.1
*7—32.32.13.1
*6—42.31.02.1
*7—32.33.23.1
*7—32.33.24.1
C.E. SPARE
-A RP Y Y 21BK 3B22 D6V- 03 2J

*1—21B3T18B
——21B1T12B

*2—21B3T13B
*6—21B3A31Q

*3—21B3C03F
——21B4A02Q

*4—21B3T12D
*7—21B3T17A

——21B1T12D
——21B1T17A

*5—21B3T12B

COMMENTS

TAG	DATE	E.C.NO.	TAG	DATE	E.C.NO.	TAG	DATE	E.C.NO.	TAG	DATE	E.C.NO.
A	09-01-64	121550L	B	10-15-64	121567	C	11-10-64	121572	D	12-19-64	121583
E	01-21-65	121589	F	03-18-65	121598	G	04-26-65	124237	H	06-22-65	124265
J	10-11-65	125598	K	04-28-66	125637	L	12-18-67	131803			

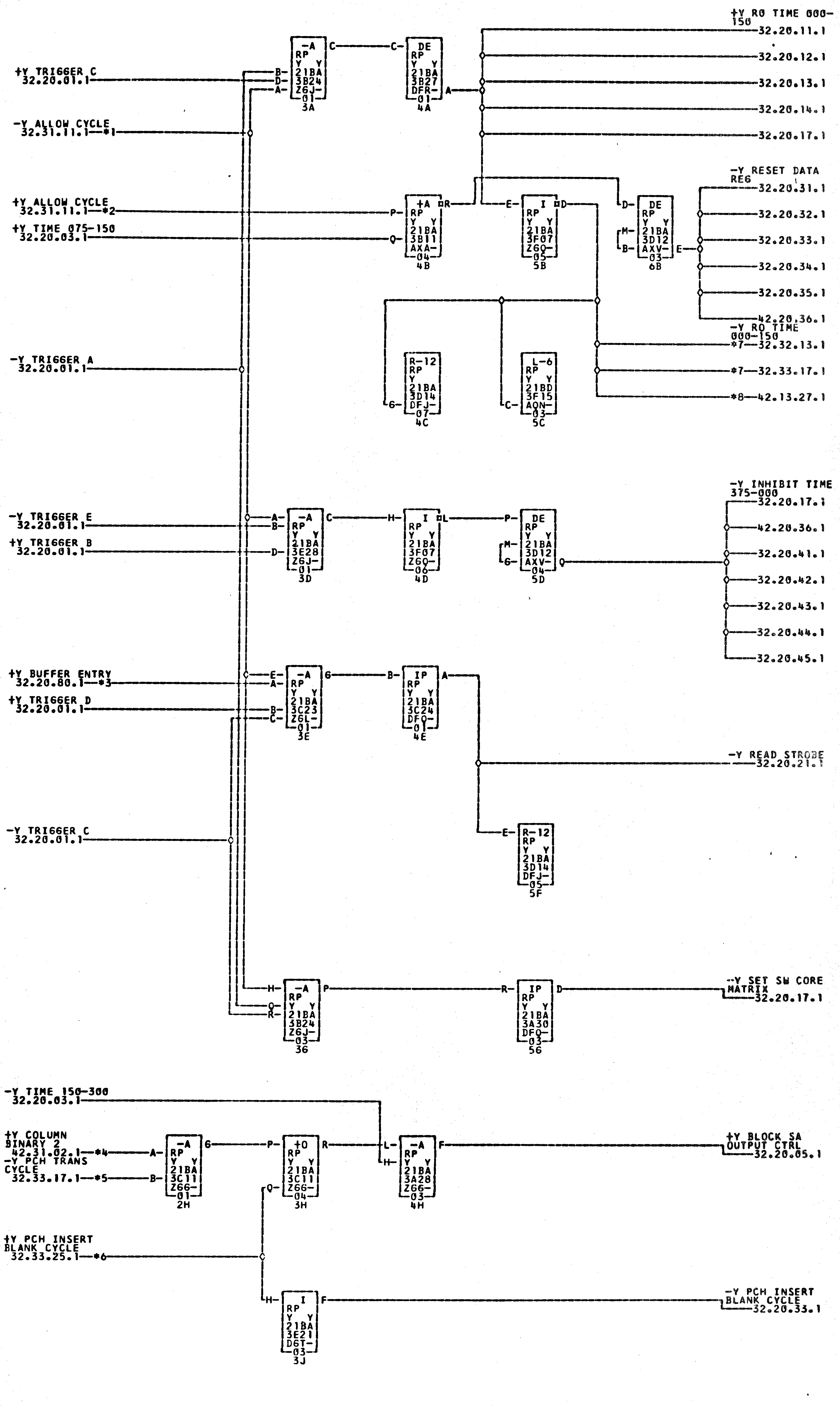
+Y RO TIME 000-150
32.20.11.1
32.20.12.1
32.20.13.1
32.20.14.1
32.20.17.1
+Y TRIGGER C 32.20.01.1
-Y ALLOW CYCLE 32.31.11.1—*1
-A RP Y Y 21BA 3B24 Z6J- 01 3A
DE RP Y Y 21BA 3B27 DFR- 01 4A
+Y ALLOW CYCLE 32.31.11.1—*2
+Y TIME 075-150 32.20.03.1
+A RP Y Y 21BA 3B11 AXA- 04 4B
I RP Y Y 21BA 3F07 Z6Q- 05 5B
DE RP Y Y 21BA 3D12 AXV- 03 6B
-Y RESET DATA REG
32.20.31.1
32.20.32.1
32.20.33.1
32.20.34.1
32.20.35.1
42.20.36.1
-Y RO TIME 000-150
*7—32.32.13.1
*7—32.33.17.1
*8—42.13.27.1
-Y TRIGGER A 32.20.01.1
R-12 RP Y 21BA 3D14 DFJ- 07 4C
L-6 RP Y Y 21BD 3F15 AQN- 03 5C
-Y TRIGGER E 32.20.01.1
+Y TRIGGER B 32.20.01.1
-A RP Y Y 21BA 3E28 Z6J- 01 3D
RP I Y Y 21BA 3F07 Z6Q- 06 4D
DE RP Y Y 21BA 3D12 AXV- 04 5D
-Y INHIBIT TIME 375-000
32.20.17.1
42.20.36.1
32.20.41.1
32.20.42.1
32.20.43.1
32.20.44.1
32.20.45.1
+Y BUFFER ENTRY 32.20.80.1—*3
+Y TRIGGER D 32.20.01.1
-A RP Y Y 21BA 3C23 Z6L- 01 3E
IP RP Y Y 21BA 3C24 DFQ- 01 4E
-Y READ STROBE 32.20.21.1
R-12 RP Y Y 21BA 3D14 DFJ- 05 5F
-Y TRIGGER C 32.20.01.1
-A RP Y Y 21BA 3B24 Z6J- 03 36
IP RP Y Y 21BA 3A30 DFQ- 03 56
-Y SET SW CORE MATRIX 32.20.17.1
-Y TIME 150-300 32.20.03.1
+Y COLUMN BINARY 2 42.31.02.1—*4
-Y PCH TRANS CYCLE 32.33.17.1—*5
-A RP Y Y 21BA 3C11 Z66- 01 2H
+O RP Y Y 21BA 3C11 Z66- 04 3H
-A RP Y Y 21BA 3A28 Z66- 03 4H
+Y BLOCK SA OUTPUT CTRL 32.20.05.1
+Y PCH INSERT BLANK CYCLE 32.33.25.1—*6
I RP Y Y 21BA 3E21 D6T- 03 3J
-Y PCH INSERT BLANK CYCLE 32.20.33.1

*1—21B3T17B *2—21B3T15A *3—21B3C32R *4—21B3B31P *5—21B3T01D *6—21B3T10B
*7—21B3T01A ———21B1T01A *8—21B3A32A ———21B4A01A

COMMENTS

TAG	DATE	E.C.NO.	TAG	DATE	E.C.NO.	TAG	DATE	E.C.NO.	TAG	DATE	E.C.NO.
A	09-01-64	121550L	B	10-15-64	121567	C	11-10-64	121572	D	12-19-64	121583
E	02-15-65	121594									

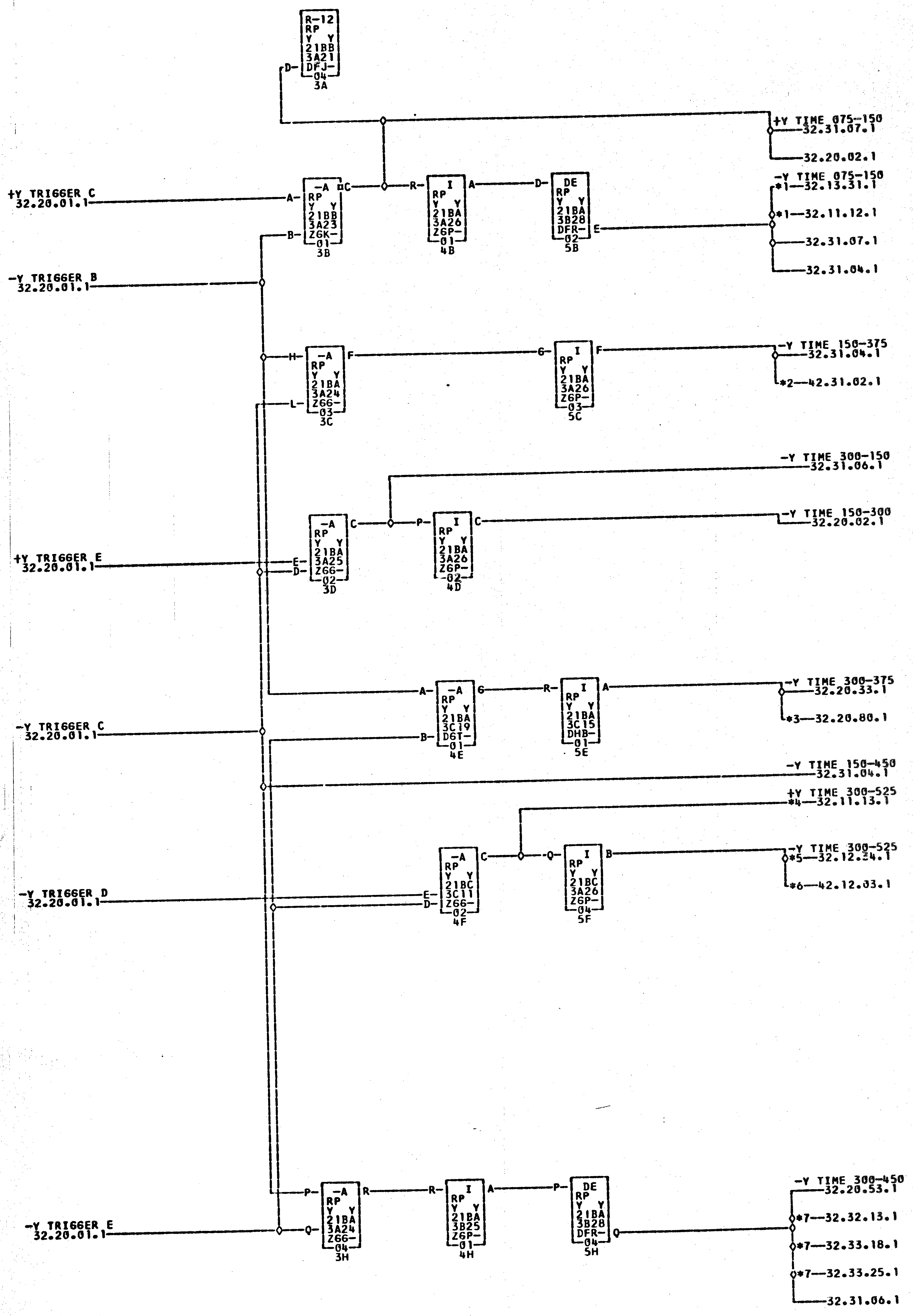
R-12
RP
Y Y
21BB
3A21
DFJ-
04
3A
D
+Y TIME 075-150
32.31.07.1
32.20.02.1
+Y TRIGGER C
32.20.01.1
A
-A
RP
Y Y
21BB
3A23
Z6K-
01
3B
B
C
R
I
RP
Y Y
21BA
3A26
Z6P-
01
4B
A
D
DE
RP
Y Y
21BA
3B28
DFR-
02
5B
E
-Y TIME 075-150
*1—32.13.31.1
*1—32.11.12.1
32.31.07.1
32.31.04.1
-Y TRIGGER B
32.20.01.1
H
-A
RP
Y Y
21BA
3A24
Z66-
03
3C
L
F
G
I
RP
Y Y
21BA
3A26
Z6P-
03
5C
F
-Y TIME 150-375
32.31.04.1
*2—42.31.02.1
-Y TIME 300-150
32.31.06.1
-A
RP
Y Y
21BA
3A25
Z66-
02
3D
C
E
D
+Y TRIGGER E
32.20.01.1
P
I
RP
Y Y
21BA
3A26
Z6P-
02
4D
C
-Y TIME 150-300
32.20.02.1
A
-A
RP
Y Y
21BA
3C19
D6T-
01
4E
B
G
R
I
RP
Y Y
21BA
3C15
DHB-
01
5E
A
-Y TIME 300-375
32.20.33.1
*3—32.20.80.1
-Y TRIGGER C
32.20.01.1
-Y TIME 150-450
32.31.04.1
+Y TIME 300-525
*4—32.11.13.1
-A
RP
Y Y
21BC
3C11
Z66-
02
4F
E
D
C
Q
I
RP
Y Y
21BC
3A26
Z6P-
04
5F
B
-Y TIME 300-525
*5—32.12.34.1
*6—42.12.03.1
-Y TRIGGER D
32.20.01.1
P
-A
RP
Y Y
21BA
3A24
Z66-
04
3H
Q
R
R
I
RP
Y Y
21BA
3B25
Z6P-
01
4H
A
P
DE
RP
Y Y
21BA
3B28
DFR-
04
5H
Q
-Y TRIGGER E
32.20.01.1
-Y TIME 300-450
32.20.53.1
*7—32.32.13.1
*7—32.33.18.1
*7—32.33.25.1
32.31.06.1

*1—21B3T01C ———21B1T01C
*4—21B3A01M ———21B1D01M
*7—21B3T02A ———21B1T02A

*2—21B3F32D ———21B4F01D
*5—21B3A01E ———21B1D01E

*3—21B3632C ———21B4E02C
*6—21B3F32C ———21B4F01C

COMMENTS

TAG	DATE	E.C.NO.	TAG	DATE	E.C.NO.	TAG	DATE	E.C.NO.	TAG	DATE	E.C.NO.
A	09-01-64	121550L	B	10-15-64	121567	C	01-21-65	121589	D	02-15-65	121594
E	03-18-65	121598	F	06-22-65	124265	6	04-28-66	125637			

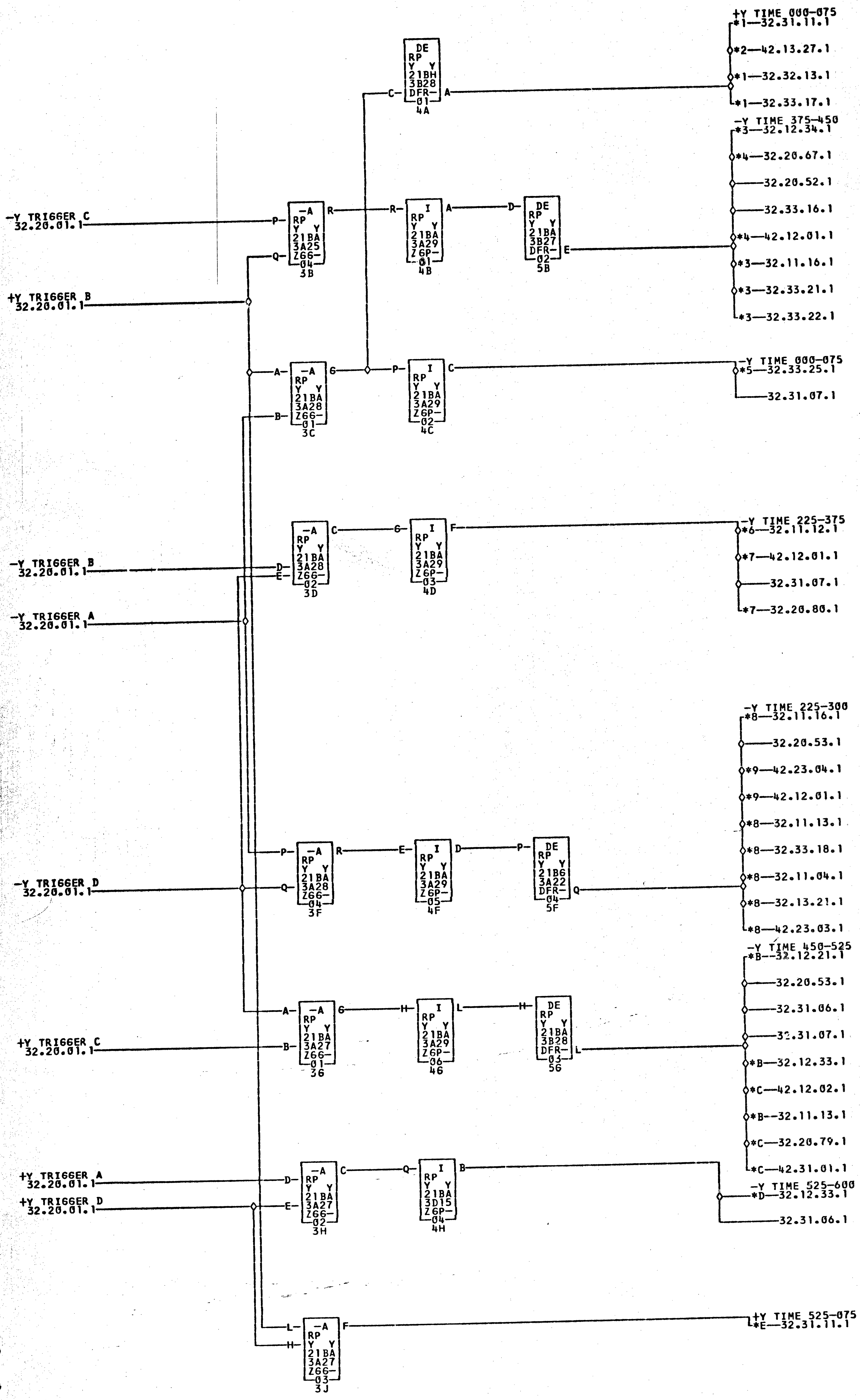
-Y TRIGGER C 32.20.01.1
+Y TRIGGER B 32.20.01.1
-Y TRIGGER B 32.20.01.1
-Y TRIGGER A 32.20.01.1
-Y TRIGGER D 32.20.01.1
+Y TRIGGER C 32.20.01.1
+Y TRIGGER A 32.20.01.1
+Y TRIGGER D 32.20.01.1
DE RP Y Y 21BH 3B28 DFR- 01 4A
-A RP Y Y 21BA 3A25 Z66- 04 3B
I RP Y Y 21BA 3A29 Z6P- 01 4B
DE RP Y Y 21BA 3B27 DFR- 02 5B
-A RP Y Y 21BA 3A28 Z66- 01 3C
I RP Y Y 21BA 3A29 Z6P- 02 4C
-A RP Y Y 21BA 3A28 Z66- 02 3D
I RP Y Y 21BA 3A29 Z6P- 03 4D
-A RP Y Y 21BA 3A28 Z66- 04 3F
I RP Y Y 21BA 3A29 Z6P- 05 4F
DE RP Y Y 21B6 3A22 DFR- 04 5F
-A RP Y Y 21BA 3A27 Z66- 01 3G
I RP Y Y 21BA 3A29 Z6P- 06 4G
DE RP Y Y 21BA 3B28 DFR- 03 5G
-A RP Y Y 21BA 3A27 Z66- 02 3H
I RP Y Y 21BA 3D15 Z6P- 04 4H
-A RP Y Y 21BA 3A27 Z66- 03 3J
+Y TIME 000-075
*1—32.31.11.1
*2—42.13.27.1
*1—32.32.13.1
*1—32.33.17.1
-Y TIME 375-450
*3—32.12.34.1
*4—32.20.67.1
32.20.52.1
32.33.16.1
*4—42.12.01.1
*3—32.11.16.1
*3—32.33.21.1
*3—32.33.22.1
-Y TIME 000-075
*5—32.33.25.1
32.31.07.1
-Y TIME 225-375
*6—32.11.12.1
*7—42.12.01.1
32.31.07.1
*7—32.20.80.1
-Y TIME 225-300
*8—32.11.16.1
32.20.53.1
*9—42.23.04.1
*9—42.12.01.1
*8—32.11.13.1
*8—32.33.18.1
*8—32.11.04.1
*8—32.13.21.1
*8—42.23.03.1
-Y TIME 450-525
*B—32.12.21.1
32.20.53.1
32.31.06.1
32.31.07.1
*B—32.12.33.1
*C—42.12.02.1
*B—32.11.13.1
*C—32.20.79.1
*C—42.31.01.1
-Y TIME 525-600
*D—32.12.33.1
32.31.06.1
+Y TIME 525-075
*E—32.31.11.1

*1—21B3T01B ——21B1T01B
*4—21B3A32D ——21B4A01D
*7—21B3A32F ——21B4A01F
*B—21B3T03C ——21B1T03C
*E—21B3T04A ——21B1T04A

*2—21B3A32B ——21B4A01B
*5—21B3T02C ——21B1T02C
*8—21B3T03B ——21B1T03B
*C—21B3A32E ——21B4A01E

*3—21B3T02B ——21B1T02B
*6—21B3T02D ——21B1T02D
*9—21B3F32R ——21B4F01R
*D—21B3T03D ——21B1T03D

COMMENTS

TAG	DATE	E.C.NO.	TAG	DATE	E.C.NO.	TAG	DATE	E.C.NO.	TAG	DATE	E.C.NO.
A	09-01-64	121550L	B	10-15-64	121567	C	12-19-64	121583	D	01-21-65	121589
E	03-18-65	121598	F	04-26-65	124237	G	06-22-65	124265	H	03-10-67	125658

2-1

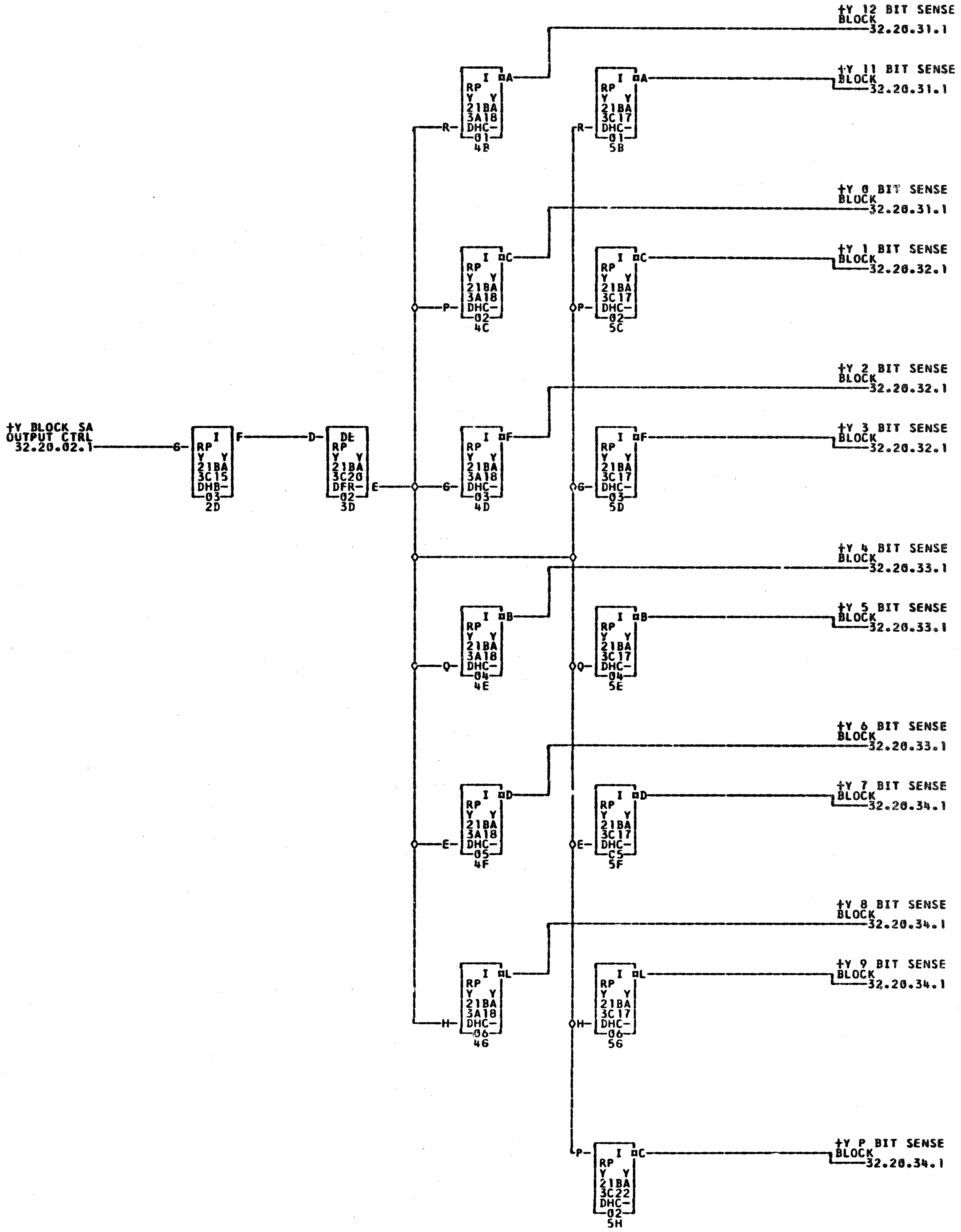
+Y BLOCK SA OUTPUT CTRL 32.20.02.1
I RP Y Y 21BA 3C15 DHB-03 2D
DE RP Y Y 21BA 3C20 DFR-02 3D
I RP Y Y 21BA 3A18 DHC-01 4B
I RP Y Y 21BA 3C17 DHC-01 5B
I RP Y Y 21BA 3A18 DHC-02 4C
I RP Y Y 21BA 3C17 DHC-02 5C
I RP Y Y 21BA 3A18 DHC-03 4D
I RP Y Y 21BA 3C17 DHC-03 5D
I RP Y Y 21BA 3A18 DHC-04 4E
I RP Y Y 21BA 3C17 DHC-04 5E
I RP Y Y 21BA 3A18 DHC-05 4F
I RP Y Y 21BA 3C17 DHC-C5 5F
I RP Y Y 21BA 3A18 DHC-06 4G
I RP Y Y 21BA 3C17 DHC-06 5G
I RP Y Y 21BA 3C22 DHC-02 5H
+Y 12 BIT SENSE BLOCK 32.20.31.1
+Y 11 BIT SENSE BLOCK 32.20.31.1
+Y 0 BIT SENSE BLOCK 32.20.31.1
+Y 1 BIT SENSE BLOCK 32.20.32.1
+Y 2 BIT SENSE BLOCK 32.20.32.1
+Y 3 BIT SENSE BLOCK 32.20.32.1
+Y 4 BIT SENSE BLOCK 32.20.33.1
+Y 5 BIT SENSE BLOCK 32.20.33.1
+Y 6 BIT SENSE BLOCK 32.20.33.1
+Y 7 BIT SENSE BLOCK 32.20.34.1
+Y 8 BIT SENSE BLOCK 32.20.34.1
+Y 9 BIT SENSE BLOCK 32.20.34.1
+Y P BIT SENSE BLOCK 32.20.34.1

COMMENTS

TAG	DATE	E.C.NO.	TAG	DATE	E.C.NO.	TAG	DATE	E.C.NO.	TAG	DATE	E.C.NO.
A	09-01-64	121550L	B	12-19-64	121583						

2-1

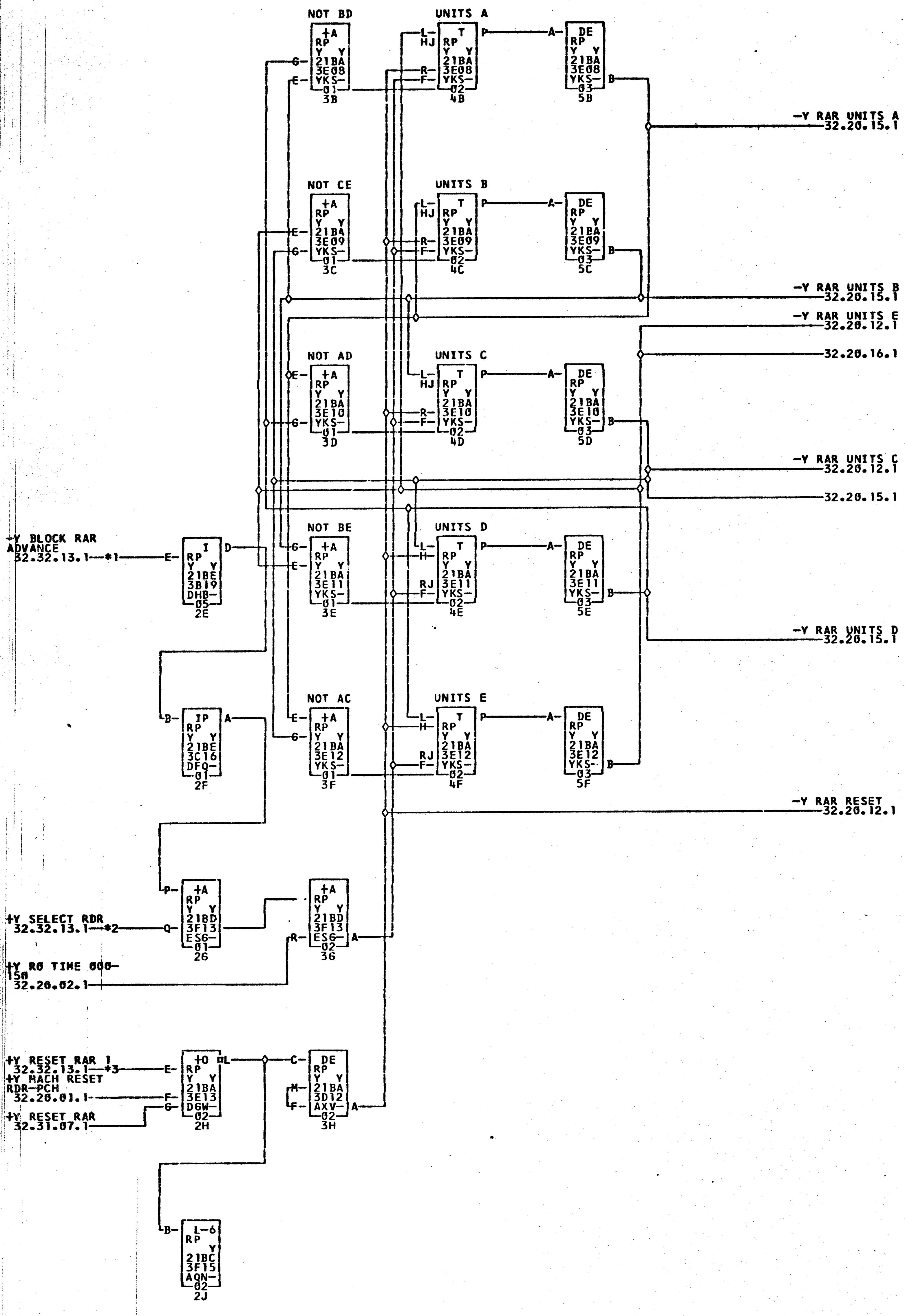
NOT BD
UNITS A
NOT CE
UNITS B
NOT AD
UNITS C
NOT BE
UNITS D
NOT AC
UNITS E
-Y RAR UNITS A 32.20.15.1
-Y RAR UNITS B 32.20.15.1
-Y RAR UNITS E 32.20.12.1
32.20.16.1
-Y RAR UNITS C 32.20.12.1
32.20.15.1
-Y RAR UNITS D 32.20.15.1
-Y RAR RESET 32.20.12.1
-Y BLOCK RAR ADVANCE 32.32.13.1 *1
+Y SELECT RDR 32.32.13.1 *2
+Y RO TIME 000-150 32.20.02.1
+Y RESET RAR 1 32.32.13.1 *3
+Y MACH RESET RDR-PCH 32.20.01.1
+Y RESET RAR 32.31.07.1
+A RP Y Y 21BA 3E08 YKS 01 3B
T RP Y Y 21BA 3E08 YKS 02 4B
DE RP Y Y 21BA 3E08 YKS 03 5B
+A RP Y Y 21BA 3E09 YKS 01 3C
T RP Y Y 21BA 3E09 YKS 02 4C
DE RP Y Y 21BA 3E09 YKS 03 5C
+A RP Y Y 21BA 3E10 YKS 01 3D
T RP Y Y 21BA 3E10 YKS 02 4D
DE RP Y Y 21BA 3E10 YKS 03 5D
+A RP Y Y 21BA 3E11 YKS 01 3E
T RP Y Y 21BA 3E11 YKS 02 4E
DE RP Y Y 21BA 3E11 YKS 03 5E
+A RP Y Y 21BA 3E12 YKS 01 3F
T RP Y Y 21BA 3E12 YKS 02 4F
DE RP Y Y 21BA 3E12 YKS 03 5F
I RP Y Y 21BE 3B19 DHB 05 2E
IP RP Y Y 21BE 3C16 DFQ 01 2F
+A RP Y Y 21BD 3F13 ESG 01 2G
+A RP Y Y 21BD 3F13 ESG 02 3G
+O RP Y Y 21BA 3E13 DGW 02 2H
DE RP Y Y 21BA 3D12 AXV 02 3H
L-6 RP Y 21BC 3F15 AQN 02 2J

*1—21B3T17C *2—21B3T17D *3—21B3T18A

MDM.4041-5042 COMMENTS

TAG	DATE	E.C.NO.
A	09-01-64	121550L
E	06-28-67	125674
B	11-10-64	121572
C	12-19-64	121583
D	03-18-65	121598

0826657

READER ADDRESS REGISTER—TENS

2821 32.20.12.1 2-1

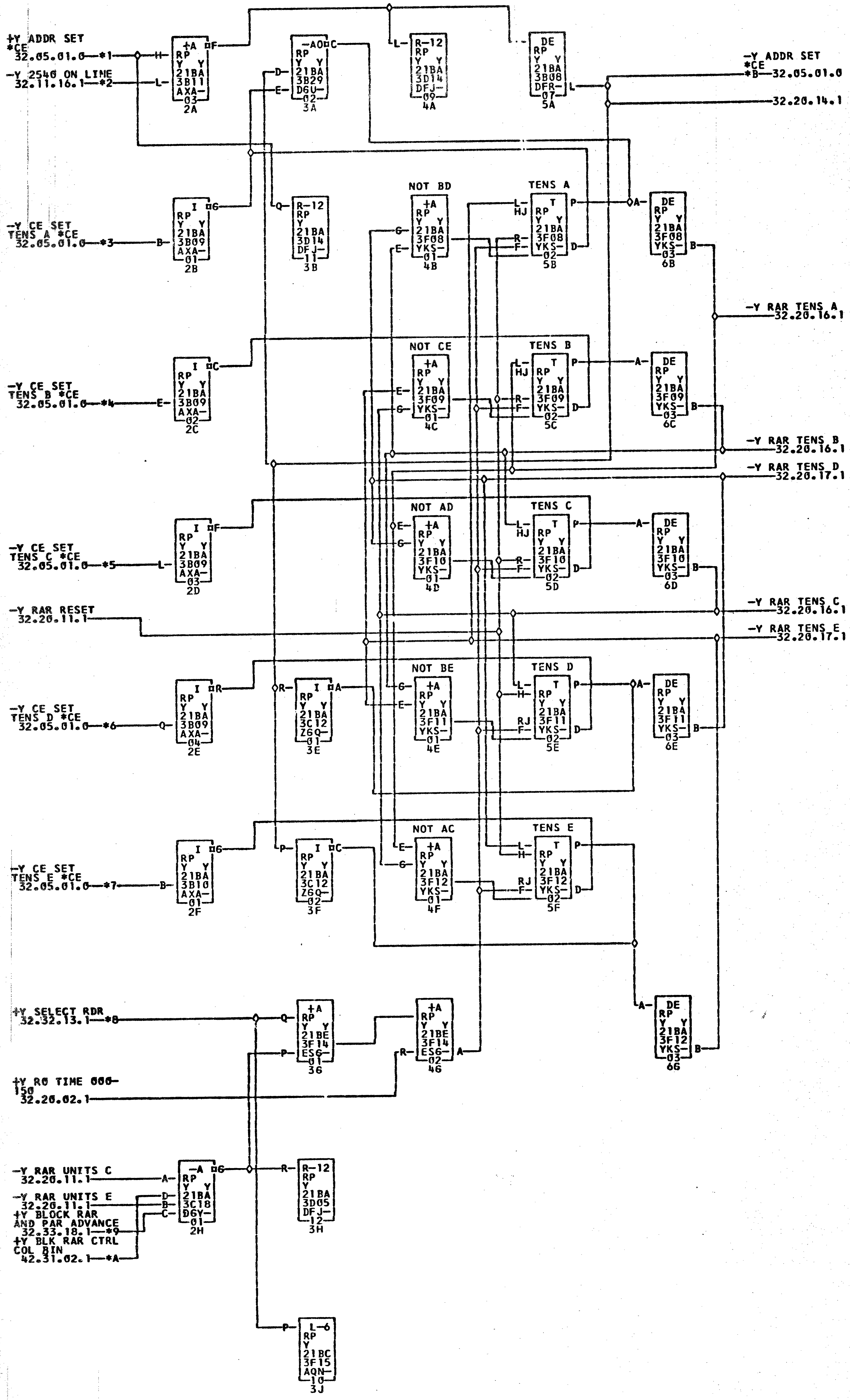
+Y ADDR SET *CE 32.05.01.0—*1
-Y 2540 ON LINE 32.11.16.1—*2
-Y CE SET TENS A *CE 32.05.01.0—*3
-Y CE SET TENS B *CE 32.05.01.0—*4
-Y CE SET TENS C *CE 32.05.01.0—*5
-Y RAR RESET 32.20.11.1
-Y CE SET TENS D *CE 32.05.01.0—*6
-Y CE SET TENS E *CE 32.05.01.0—*7
+Y SELECT RDR 32.32.13.1—*8
+Y RO TIME 000-150 32.20.02.1
-Y RAR UNITS C 32.20.11.1
-Y RAR UNITS E 32.20.11.1
+Y BLOCK RAR AND PAR ADVANCE 32.33.18.1—*9
+Y BLK RAR CTRL COL BIN 42.31.02.1—*A
-Y ADDR SET *CE *B—32.05.01.0
32.20.14.1
-Y RAR TENS A 32.20.16.1
-Y RAR TENS B 32.20.16.1
-Y RAR TENS D 32.20.17.1
-Y RAR TENS C 32.20.16.1
-Y RAR TENS E 32.20.17.1
NOT BD
TENS A
NOT CE
TENS B
NOT AD
TENS C
NOT BE
TENS D
NOT AC
TENS E
2A 3A 4A 5A
2B 3B 4B 5B 6B
2C 4C 5C 6C
2D 4D 5D 6D
2E 3E 4E 5E 6E
2F 3F 4F 5F
36 46 66
2H 3H
3J

*1—21B3D01A
*5—21B3D01D
*8—21B3T17D

*2—21B3T24D
——CERPB091
——21B1T17D

*3—21B3D01B
*6—21B3D01E
*9—21B3T16B

——CERPB087
——CERPB093
*A—21B3A326

*4—21B3D01C
*7—21B3D01F
*B—21B3D016

——CERPB089
——CERPA097
——CERPA104

COMMENTS
MDM.4020-4041-4441-5042-5422

TAG	DATE	E.C.NO.	TAG	DATE	E.C.NO.	TAG	DATE	E.C.NO.	TAG	DATE	E.C.NO.
A	09-01-64	121550L	B	10-15-64	121567	C	11-10-64	121572	D	02-15-65	12159
E	03-18-65	121598	F	06-22-65	124265	G	03-10-67	125658			

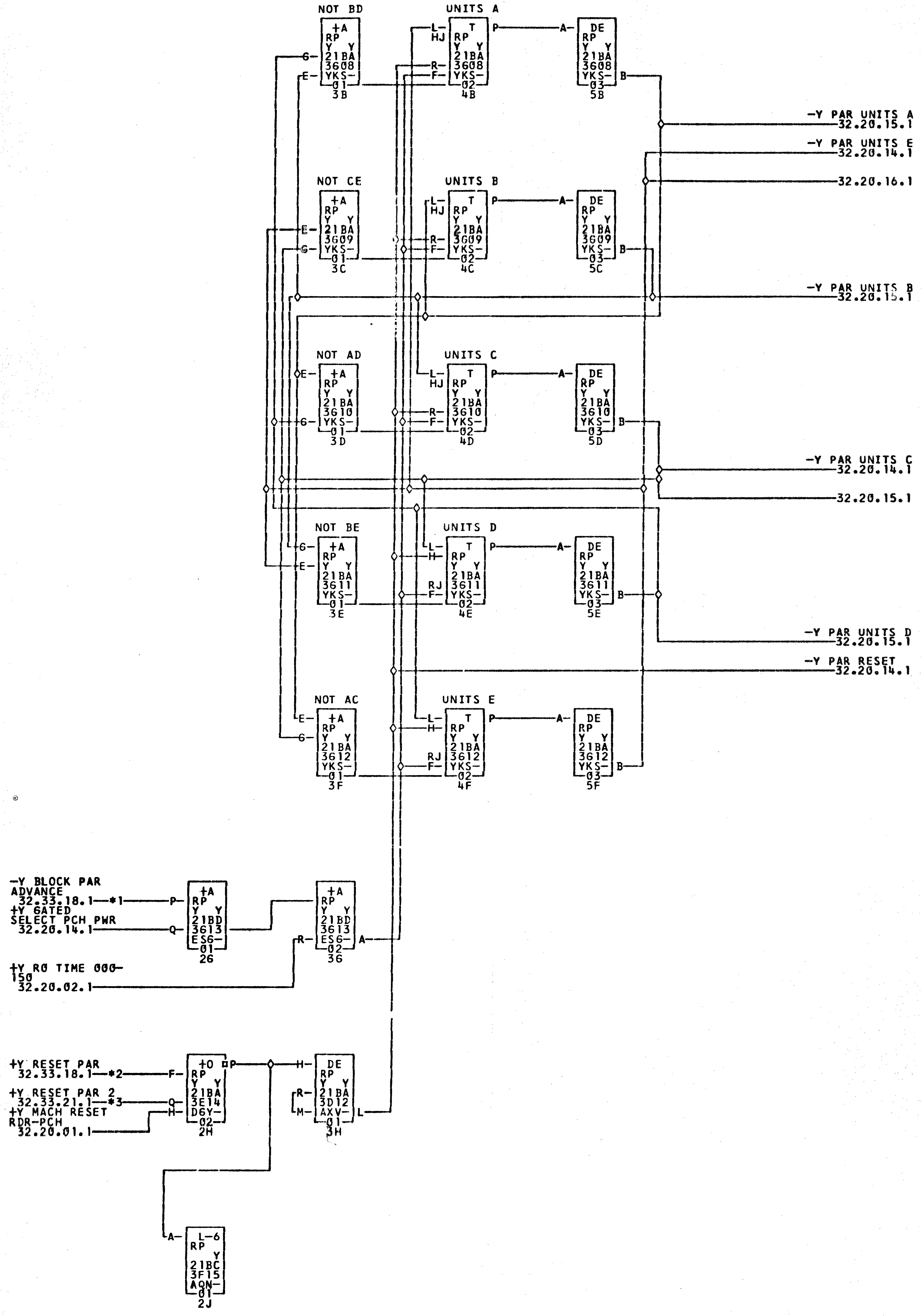
NOT BD
+A RP Y Y 21BA 3608 YKS-01 3B
UNITS A
T RP Y Y 21BA 3608 YKS-02 4B
DE RP Y Y 21BA 3608 YKS-03 5B
-Y PAR UNITS A 32.20.15.1
-Y PAR UNITS E 32.20.14.1
32.20.16.1
NOT CE
+A RP Y Y 21BA 3609 YKS-01 3C
UNITS B
T RP Y Y 21BA 3609 YKS-02 4C
DE RP Y Y 21BA 3609 YKS-03 5C
-Y PAR UNITS B 32.20.15.1
NOT AD
+A RP Y Y 21BA 3610 YKS-01 3D
UNITS C
T RP Y Y 21BA 3610 YKS-02 4D
DE RP Y Y 21BA 3610 YKS-03 5D
-Y PAR UNITS C 32.20.14.1
32.20.15.1
NOT BE
+A RP Y Y 21BA 3611 YKS-01 3E
UNITS D
T RP Y Y 21BA 3611 YKS-02 4E
DE RP Y Y 21BA 3611 YKS-03 5E
-Y PAR UNITS D 32.20.15.1
-Y PAR RESET 32.20.14.1
NOT AC
+A RP Y Y 21BA 3612 YKS-01 3F
UNITS E
T RP Y Y 21BA 3612 YKS-02 4F
DE RP Y Y 21BA 3612 YKS-03 5F
-Y BLOCK PAR ADVANCE 32.33.18.1—*1
+Y GATED SELECT PCH PWR 32.20.14.1
+A RP Y Y 21BD 3613 ESG-01 2G
+A RP Y Y 21BD 3613 ESG-02 3G
+Y RO TIME 000-150 32.20.02.1
+Y RESET PAR 32.33.18.1—*2
+Y RESET PAR 2 32.33.21.1—*3
+Y MACH RESET RDR-PCH 32.20.01.1
+O RP Y Y 21BA 3E14 DGY-02 2H
DE RP Y Y 21BA 3D12 AXV-01 3H
L-6 RP Y 21BC 3F15 AQN-01 2J

*1—21B3T18C *2—21B3T19A *3—21B3T15C

COMMENTS

TAG	DATE	E.C.NO.	TAG	DATE	E.C.NO.	TAG	DATE	E.C.NO.	TAG	DATE	E.C.NO.
A	09-01-64	121550L	B	11-10-64	121572	C	12-19-64	121583	D	03-18-65	121598
E	06-28-67	125674									

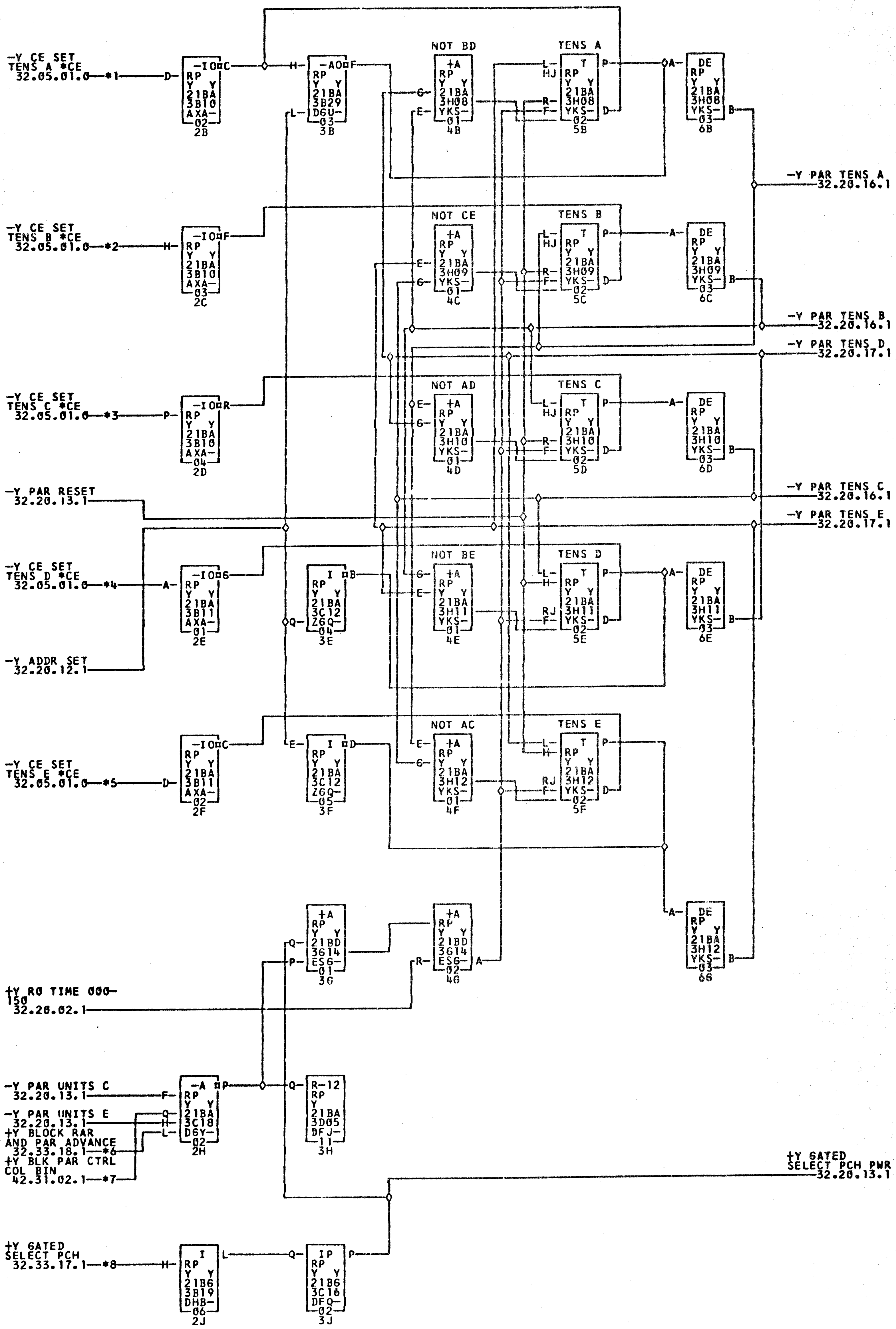
-Y CE SET TENS A *CE 32.05.01.0—*1
-Y CE SET TENS B *CE 32.05.01.0—*2
-Y CE SET TENS C *CE 32.05.01.0—*3
-Y PAR RESET 32.20.13.1
-Y CE SET TENS D *CE 32.05.01.0—*4
-Y ADDR SET 32.20.12.1
-Y CE SET TENS E *CE 32.05.01.0—*5
+Y RO TIME 000-150 32.20.02.1
-Y PAR UNITS C 32.20.13.1
-Y PAR UNITS E 32.20.13.1
+Y BLOCK RAR AND PAR ADVANCE 32.33.18.1—*6
+Y BLK PAR CTRL COL BIN 42.31.02.1—*7
+Y GATED SELECT PCH 32.33.17.1—*8
-IO RP Y Y 21BA 3B10 AXA- 02 2B
-AO RP Y Y 21BA 3B29 D6U- 03 3B
NOT BD +A RP Y Y 21BA 3H08 YKS- 01 4B
TENS A T RP Y Y 21BA 3H08 YKS- 02 5B
DE RP Y Y 21BA 3H08 YKS- 03 6B
-IO RP Y Y 21BA 3B10 AXA- 03 2C
NOT CE +A RP Y Y 21BA 3H09 YKS- 01 4C
TENS B T RP Y Y 21BA 3H09 YKS- 02 5C
DE RP Y Y 21BA 3H09 YKS- 03 6C
-IO RP Y Y 21BA 3B10 AXA- 04 2D
NOT AD +A RP Y Y 21BA 3H10 YKS- 01 4D
TENS C T RP Y Y 21BA 3H10 YKS- 02 5D
DE RP Y Y 21BA 3H10 YKS- 03 6D
-IO RP Y Y 21BA 3B11 AXA- 01 2E
I RP Y Y 21BA 3C12 Z6Q- 04 3E
NOT BE +A RP Y Y 21BA 3H11 YKS- 01 4E
TENS D T RP Y Y 21BA 3H11 YKS- 02 5E
DE RP Y Y 21BA 3H11 YKS- 03 6E
-IO RP Y Y 21BA 3B11 AXA- 02 2F
I RP Y Y 21BA 3C12 Z6Q- 05 3F
NOT AC +A RP Y Y 21BA 3H12 YKS- 01 4F
TENS E T RP Y Y 21BA 3H12 YKS- 02 5F
+A RP Y Y 21BD 3614 ES6- 01 3G
+A RP Y Y 21BD 3614 ES6- 02 4G
DE RP Y Y 21BA 3H12 YKS- 03 6G
-A RP Y Y 21BA 3C18 D6Y- 02 2H
R-12 RP Y 21BA 3D05 DFJ- 11 3H
I RP Y Y 21B6 3B19 DHB- 06 2J
IP RP Y Y 21B6 3C16 DFQ- 02 3J
-Y PAR TENS A 32.20.16.1
-Y PAR TENS B 32.20.16.1
-Y PAR TENS D 32.20.17.1
-Y PAR TENS C 32.20.16.1
-Y PAR TENS E 32.20.17.1
+Y GATED SELECT PCH PWR 32.20.13.1

*1—21B3D01B ———CERPB087 *2—21B3D01C ———CERPB089 *3—21B3D01D ———CERPB091
*4—21B3D01E ———CERPB093 *5—21B3D01F ———CERPA097 *6—21B3T16B *7—21B3A32H
*8—21B3T18D

COMMENTS
MDM.4020-4061-4461-5062-5462

TAG	DATE	E.C.NO.	TAG	DATE	E.C.NO.	TAG	DATE	E.C.NO.	TAG	DATE	E.C.NO.
A	09-01-64	121550L	B	11-10-64	121572	C	12-19-64	121583	D	03-18-65	121598
E	11-19-65	125601	F	C -10-67	125658	G	06-28-67	125674			

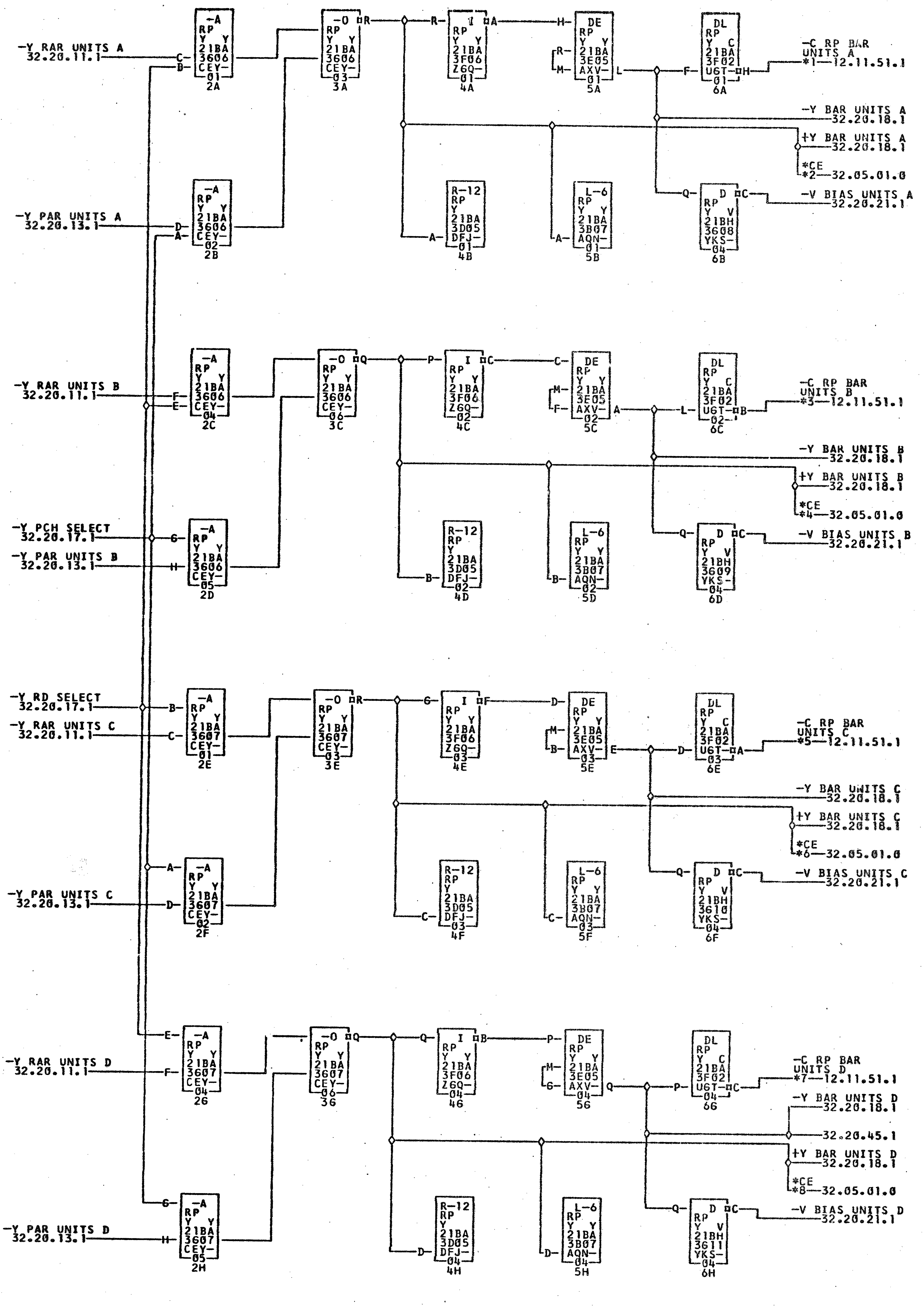
-Y RAR UNITS A 32.20.11.1
-Y PAR UNITS A 32.20.13.1
-Y RAR UNITS B 32.20.11.1
-Y PCH SELECT 32.20.17.1
-Y PAR UNITS B 32.20.13.1
-Y RD SELECT 32.20.17.1
-Y RAR UNITS C 32.20.11.1
-Y PAR UNITS C 32.20.13.1
-Y RAR UNITS D 32.20.11.1
-Y PAR UNITS D 32.20.13.1
-A RP Y Y 21BA 3606 CEY- 01 2A
-A RP Y Y 21BA 3606 CEY- 02 2B
-A RP Y Y 21BA 3606 CEY- 04 2C
-A RP Y Y 21BA 3606 CEY- 05 2D
-A RP Y Y 21BA 3607 CEY- 01 2E
-A RP Y Y 21BA 3607 CEY- 02 2F
-A RP Y Y 21BA 3607 CEY- 04 2G
-A RP Y Y 21BA 3607 CEY- 05 2H
-O RP Y Y 21BA 3606 CEY- 03 3A
-O RP Y Y 21BA 3606 CEY- 06 3C
-O RP Y Y 21BA 3607 CEY- 03 3E
-O RP Y Y 21BA 3607 CEY- 06 3G
I RP Y Y 21BA 3F06 Z6Q- 01 4A
I RP Y Y 21BA 3F06 Z6Q- 02 4C
I RP Y Y 21BA 3F06 Z6Q- 03 4E
I RP Y Y 21BA 3F06 Z6Q- 04 4G
R-12 RP Y 21BA 3D05 DFJ- 01 4B
R-12 RP Y 21BA 3D05 DFJ- 02 4D
R-12 RP Y 21BA 3D05 DFJ- 03 4F
R-12 RP Y 21BA 3D05 DFJ- 04 4H
DE RP Y Y 21BA 3E05 AXV- 01 5A
DE RP Y Y 21BA 3E05 AXV- 02 5C
DE RP Y Y 21BA 3E05 AXV- 03 5E
DE RP Y Y 21BA 3E05 AXV- 04 5G
L-6 RP Y Y 21BA 3B07 AQN- 01 5B
L-6 RP Y Y 21BA 3B07 AQN- 02 5D
L-6 RP Y Y 21BA 3B07 AQN- 03 5F
L-6 RP Y Y 21BA 3B07 AQN- 04 5H
DL RP Y C 21BA 3F02 U6T- 01 6A
DL RP Y C 21BA 3F02 U6T- 02 6C
DL RP Y C 21BA 3F02 U6T- 03 6E
DL RP Y C 21BA 3F02 U6T- 04 6G
D RP Y V 21BH 3608 YKS- 04 6B
D RP Y V 21BH 3609 YKS- 04 6D
D RP Y V 21BH 3610 YKS- 04 6F
D RP Y V 21BH 3611 YKS- 04 6H
-C RP BAR UNITS A *1—12.11.51.1
-Y BAR UNITS A 32.20.18.1
+Y BAR UNITS A 32.20.18.1
*CE *2—32.05.01.0
-V BIAS UNITS A 32.20.21.1
-C RP BAR UNITS B *3—12.11.51.1
-Y BAR UNITS B 32.20.18.1
+Y BAR UNITS B 32.20.18.1
*CE *4—32.05.01.0
-V BIAS UNITS B 32.20.21.1
-C RP BAR UNITS C *5—12.11.51.1
-Y BAR UNITS C 32.20.18.1
+Y BAR UNITS C 32.20.18.1
*CE *6—32.05.01.0
-V BIAS UNITS C 32.20.21.1
-C RP BAR UNITS D *7—12.11.51.1
-Y BAR UNITS D 32.20.18.1
32.20.45.1
+Y BAR UNITS D 32.20.18.1
*CE *8—32.05.01.0
-V BIAS UNITS D 32.20.21.1

*1—21B3601A
——21C1C22B
——40A1C03C
*8—21B3C01D

——21C1C22A
——40A1C03B
*6—21B3C01C
——CERPA050

——40A1C03A
*4—21B3C01B
——CERPA036

*2—21B3C01A
——CERPA035
*7—21B3601D

——CERPA034
*5—21B3601C
——21C1C22D

*3—21B3601B
——21C1C22C
——40A1C03D

COMMENTS
MDM. 4041-4061-4441-4461

TAG	DATE	E.C.NO.	TAG	DATE	E.C.NO.	TAG	DATE	E.C.NO.	TAG	DATE	E.C.NO.
A	09-01-64	121550L	B	10-15-64	121567	C	11-10-64	121572	D	02-15-65	121594
E	03-18-65	121598	F	11-19-65	125601	G	04-28-66	125637	H	03-10-67	125658

READ+PUNCH BUFFER BIAS DRIVE SHEET 2

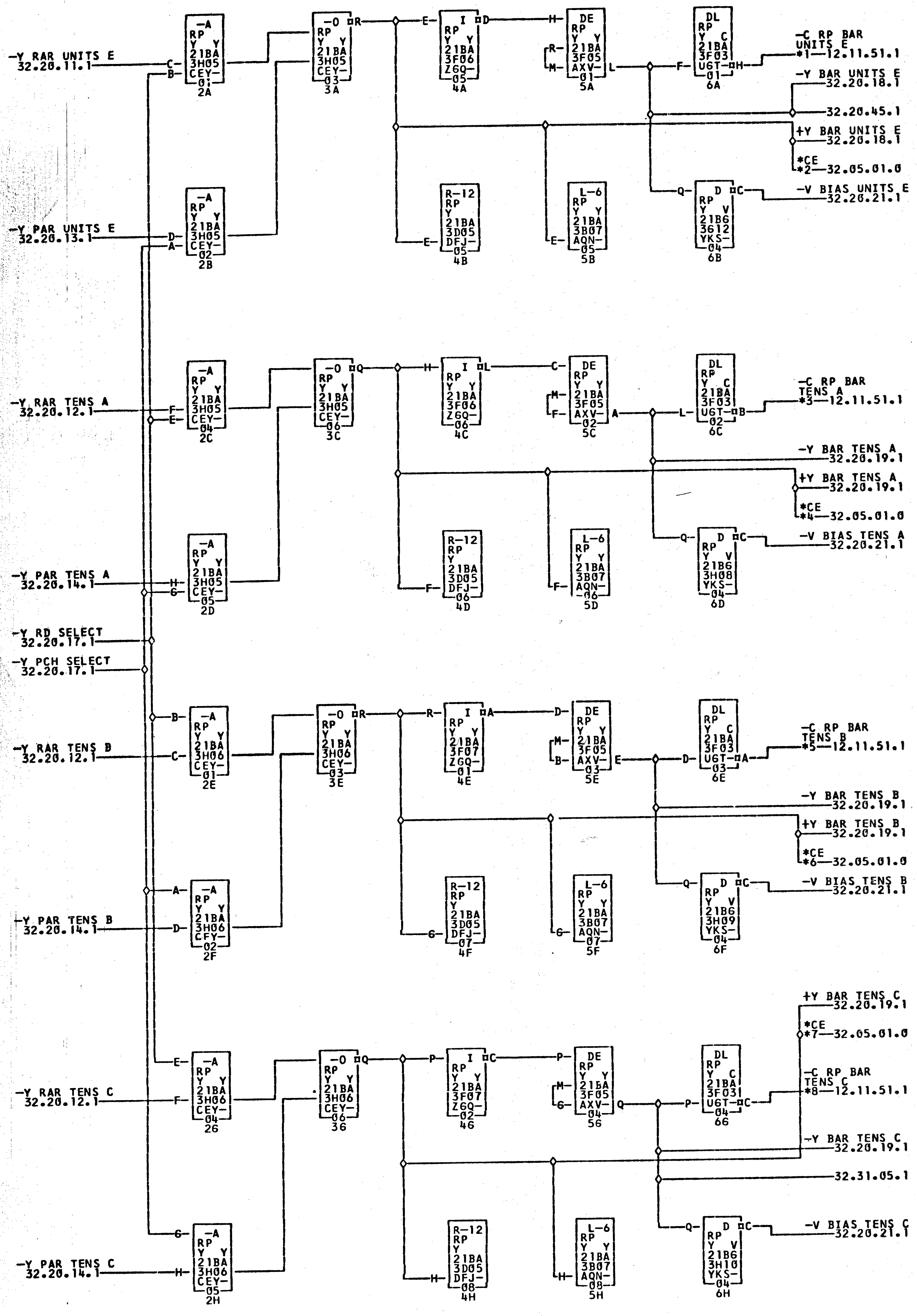
-Y RAR UNITS E 32.20.11.1
-Y PAR UNITS E 32.20.13.1
-Y RAR TENS A 32.20.12.1
-Y PAR TENS A 32.20.14.1
-Y RD SELECT 32.20.17.1
-Y PCH SELECT 32.20.17.1
-Y RAR TENS B 32.20.12.1
-Y PAR TENS B 32.20.14.1
-Y RAR TENS C 32.20.12.1
-Y PAR TENS C 32.20.14.1
-A RP Y Y 21BA 3H05 CEY-03 2A
-A RP Y Y 21BA 3H05 CEY-02 2B
-A RP Y Y 21BA 3H05 CEY-04 2C
-A RP Y Y 21BA 3H05 CEY-05 2D
-A RP Y Y 21BA 3H06 CEY-01 2E
-A RP Y Y 21BA 3H06 CFY-02 2F
-A RP Y Y 21BA 3H06 CEY-04 2G
-A RP Y Y 21BA 3H06 CEY-05 2H
-O RP Y Y 21BA 3H05 CEY-03 3A
-O RP Y Y 21BA 3H05 CEY-06 3C
-O RP Y Y 21BA 3H06 CEY-03 3E
-O RP Y Y 21BA 3H06 CEY-06 3G
I RP Y Y 21BA 3F06 ZGQ-05 4A
R-12 RP Y 21BA 3D05 DFJ-05 4B
I RP Y Y 21BA 3F06 ZGQ-06 4C
R-12 RP Y 21BA 3D05 DFJ-06 4D
I RP Y Y 21BA 3F07 ZGQ-01 4E
R-12 RP Y 21BA 3D05 DFJ-07 4F
I RP Y Y 21BA 3F07 ZGQ-02 4G
R-12 RP Y 21BA 3D05 DFJ-08 4H
DE RP Y Y 21BA 3F05 AXV-01 5A
L-6 RP Y Y 21BA 3B07 AQN-05 5B
DE RP Y Y 21BA 3F05 AXV-02 5C
L-6 RP Y Y 21BA 3B07 AQN-06 5D
DE RP Y Y 21BA 3F05 AXV-03 5E
L-6 RP Y Y 21BA 3B07 AQN-07 5F
DE RP Y Y 21BA 3F05 AXV-04 5G
L-6 RP Y Y 21BA 3B07 AQN-08 5H
DL RP Y C 21BA 3F03 U6T-01 6A
D RP Y V 21B6 3G12 YKS-04 6B
DL RP Y C 21BA 3F03 U6T-02 6C
D RP Y V 21B6 3H08 YKS-04 6D
DL RP Y C 21BA 3F03 U6T-03 6E
D RP Y V 21B6 3H09 YKS-04 6F
DL RP Y C 21BA 3F03 U6T-04 6G
D RP Y V 21B6 3H10 YKS-04 6H
-C RP BAR UNITS E *1—12.11.51.1
-Y BAR UNITS E 32.20.18.1
32.20.45.1
+Y BAR UNITS E 32.20.18.1
*CE *2—32.05.01.0
-V BIAS UNITS E 32.20.21.1
-C RP BAR TENS A *3—12.11.51.1
-Y BAR TENS A 32.20.19.1
+Y BAR TENS A 32.20.19.1
*CE *4—32.05.01.0
-V BIAS TENS A 32.20.21.1
-C RP BAR TENS B *5—12.11.51.1
-Y BAR TENS B 32.20.19.1
+Y BAR TENS B 32.20.19.1
*CE *6—32.05.01.0
-V BIAS TENS B 32.20.21.1
+Y BAR TENS C 32.20.19.1
*CE *7—32.05.01.0
-C RP BAR TENS C *8—12.11.51.1
-Y BAR TENS C 32.20.19.1
32.31.05.1
-V BIAS TENS C 32.20.21.1

*1—21B3G01E
21C1C22F
40A1C036
21C1C22H

21C1C22F
40A1C03F
*6—21B3C016
40A1C03H

40A1C03E
*4—21B3C01F
CERPA032

*2—21B3C01E
CERPA031
*7—21B3C01H

CERPA049
*5—21B3G016
CERPA033

*3—21B3G01F
21C1C226
*8—21B3G01H

COMMENTS
MDM. 4041-4061-4441-4461

TAG	DATE	E.C.NO.	TAG	DATE	E.C.NO.	TAG	DATE	E.C.NO.	TAG	DATE	E.C.NO.
A	09-01-64	121550L	B	10-15-64	121567	C	11-10-64	121572	D	02-15-65	121594
E	11-19-65	125601	F	04-28-66	125637	G	03-10-67	125658			

READ+PUNCH BUFFER BIAS DRIVE SHEET 3

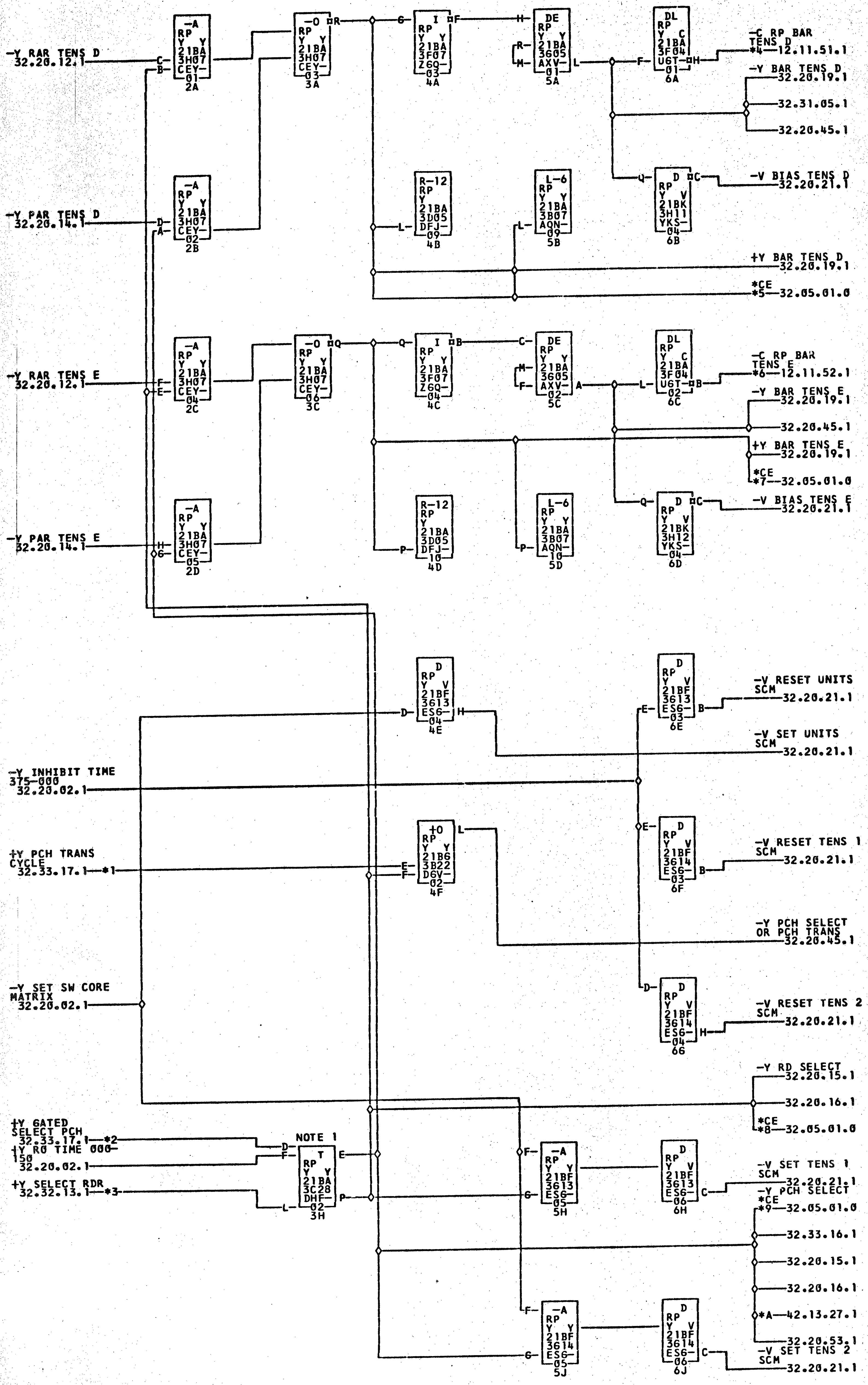
-Y RAR TENS D 32.20.12.1
-Y PAR TENS D 32.20.14.1
-Y RAR TENS E 32.20.12.1
-Y PAR TENS E 32.20.14.1
-A RP Y Y 21BA 3H07 CEY- 01 2A
-A RP Y Y 21BA 3H07 CEY- 02 2B
-A RP Y Y 21BA 3H07 CEY- 04 2C
-A RP Y Y 21BA 3H07 CEY- 05 2D
-O RP Y Y 21BA 3H07 CEY- 03 3A
-O RP Y Y 21BA 3H07 CEY- 06 3C
I RP Y Y 21BA 3F07 Z6Q- 03 4A
I RP Y Y 21BA 3F07 Z6Q- 04 4C
R-12 RP Y 21BA 3D05 DFJ- 09 4B
R-12 RP Y 21BA 3D05 DFJ- 10 4D
DE RP Y Y 21BA 3605 AXV- 01 5A
DE RP Y Y 21BA 3605 AXV- 02 5C
L-6 RP Y Y 21BA 3B07 AQN- 09 5B
L-6 RP Y Y 21BA 3B07 AQN- 10 5D
DL RP Y C 21BA 3F04 U6T- 01 6A
DL RP Y C 21BA 3F04 U6T- 02 6C
D RP Y V 21BK 3H11 YKS- 04 6B
D RP Y V 21BK 3H12 YKS- 04 6D
-C RP BAR TENS D *4—12.11.51.1
-Y BAR TENS D 32.20.19.1
32.31.05.1
32.20.45.1
-V BIAS TENS D 32.20.21.1
+Y BAR TENS D 32.20.19.1
*CE *5—32.05.01.0
-C RP BAR TENS E *6—12.11.52.1
-Y BAR TENS E 32.20.19.1
32.20.45.1
+Y BAR TENS E 32.20.19.1
*CE *7—32.05.01.0
-V BIAS TENS E 32.20.21.1
D RP Y V 21BF 3613 ES6- 04 4E
D RP Y V 21BF 3613 ES6- 03 6E
-V RESET UNITS SCM 32.20.21.1
-V SET UNITS SCM 32.20.21.1
-Y INHIBIT TIME 375-000 32.20.02.1
+Y PCH TRANS CYCLE 32.33.17.1—*1
+O RP Y Y 21B6 3B22 D6V- 02 4F
D RP Y V 21BF 3614 ES6- 03 6F
-V RESET TENS 1 SCM 32.20.21.1
-Y PCH SELECT OR PCH TRANS 32.20.45.1
-Y SET SW CORE MATRIX 32.20.02.1
D RP Y V 21BF 3614 ES6- 04 66
-V RESET TENS 2 SCM 32.20.21.1
-Y RD SELECT 32.20.15.1
32.20.16.1
*CE *8—32.05.01.0
+Y GATED SELECT PCH 32.33.17.1—*2
+Y RD TIME 000-150 32.20.02.1
+Y SELECT RDR 32.32.13.1—*3
NOTE 1
T RP Y Y 21BA 3C28 DHF- 02 3H
-A RP Y Y 21BF 3613 ES6- 05 5H
D RP Y V 21BF 3613 ES6- 06 6H
-V SET TENS 1 SCM 32.20.21.1
-Y PCH SELECT
*CE *9—32.05.01.0
32.33.16.1
32.20.15.1
32.20.16.1
*A—42.13.27.1
32.20.53.1
-A RP Y Y 21BF 3614 ES6- 05 5J
D RP Y V 21BF 3614 ES6- 06 6J
-V SET TENS 2 SCM 32.20.21.1

*1—21B3A01D
*5—21B3C01K
—CERPA046
—21B4A02N

*2—21B3T18D
—CERPA047
*8—21B3C036

*3—21B3T17D
*6—21B3601L
—CERPA052

*4—21B3601K
—21C1C22L
*9—21B3C03H

—21C1C22K
—40A1C03L
—CERPA037

—40A1C03K
*7—21B3C01L
*A—21B3A31N

COMMENTS

NOTE 1—TRIGGER IS RESET BY CLOCK RESET AS SHOWN ON PIN A OF C28 ON LOGIC 32.20.01.1
MDM. 4040-4041-4061-4440-4441-4461

TAG	DATE	E.C.NO.	TAG	DATE	E.C.NO.	TAG	DATE	E.C.NO.	TAG	DATE	E.C.NO.
A	09-01-64	121550L	B	10-15-64	121567	C	11-10-64	121572	D	12-19-64	121583
E	02-15-65	121594	F	03-18-65	121598	6	04-26-65	124237	H	04-28-66	125637
J	06-23-66	125647	K	03-10-67	125658						

2-1

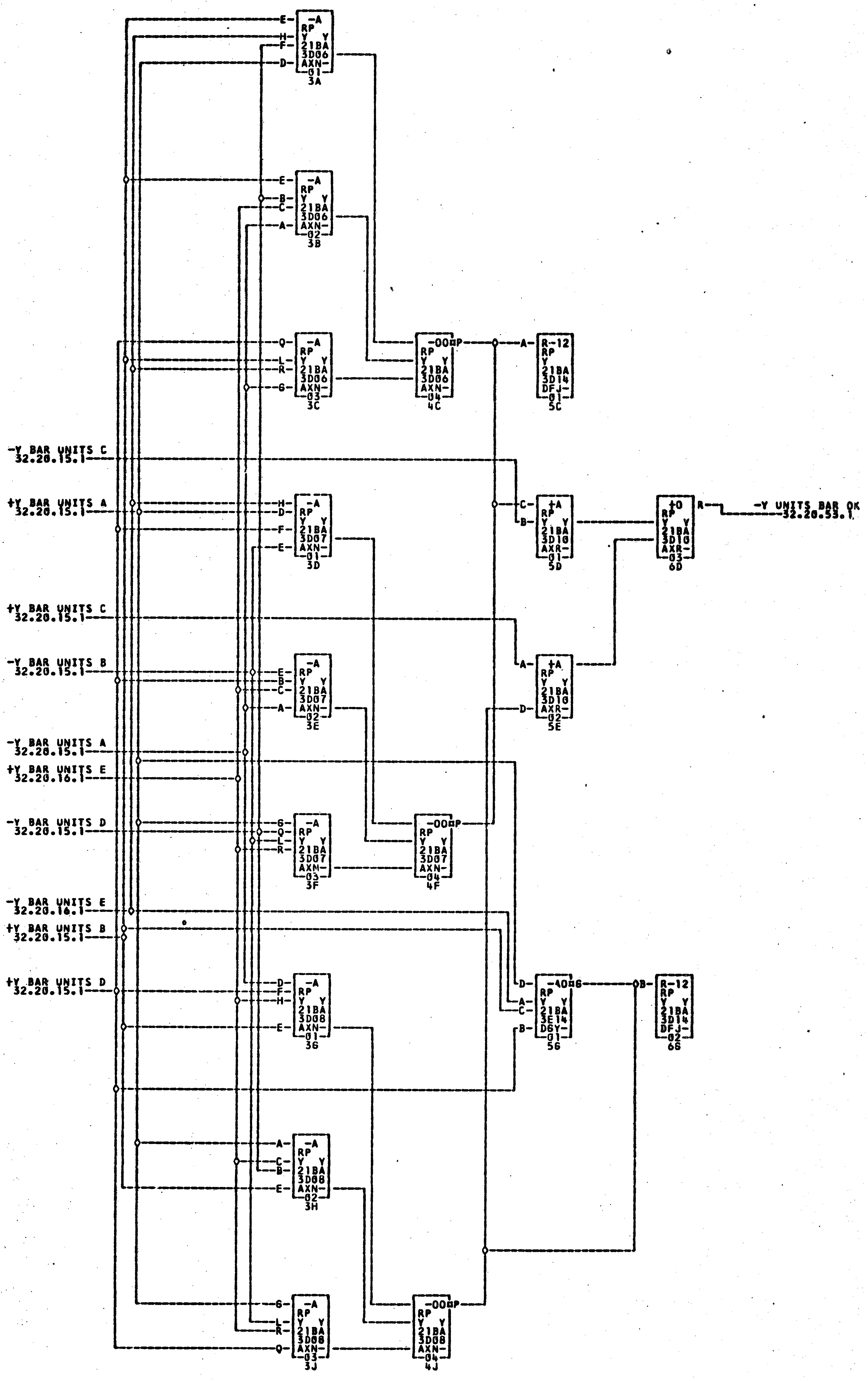
-A RP Y Y 21BA 3D06 AXN-01 3A
-A RP Y Y 21BA 3D06 AXN-02 3B
-A RP Y Y 21BA 3D06 AXN-03 3C
-00¤P RP Y Y 21BA 3D06 AXN-04 4C
R-12 RP Y 21BA 3D14 DFJ-01 5C
-Y BAR UNITS C 32.20.15.1
+Y BAR UNITS A 32.20.15.1
-A RP Y Y 21BA 3D07 AXN-01 3D
+A RP Y Y 21BA 3D10 AXR-01 5D
+0 RP Y Y 21BA 3D10 AXR-03 6D
-Y UNITS BAR OK 32.20.53.1
+Y BAR UNITS C 32.20.15.1
-Y BAR UNITS B 32.20.15.1
-A RP Y Y 21BA 3D07 AXN-02 3E
+A RP Y Y 21BA 3D10 AXR-02 5E
-Y BAR UNITS A 32.20.15.1
+Y BAR UNITS E 32.20.16.1
-Y BAR UNITS D 32.20.15.1
-A RP Y Y 21BA 3D07 AXN-03 3F
-00¤P RP Y Y 21BA 3D07 AXN-04 4F
-Y BAR UNITS E 32.20.16.1
+Y BAR UNITS B 32.20.15.1
+Y BAR UNITS D 32.20.15.1
-A RP Y Y 21BA 3D08 AXN-01 3G
-40¤G RP Y Y 21BA 3E14 DGY-01 5G
R-12 RP Y Y 21BA 3D14 DFJ-02 6G
-A RP Y Y 21BA 3D08 AXN-02 3H
-A RP Y Y 21BA 3D08 AXN-03 3J
-00¤P RP Y Y 21BA 3D08 AXN-04 4J

COMMENTS

TAG	DATE	E.C.NO.	TAG	DATE	E.C.NO.	TAG	DATE	E.C.NO.	TAG	DATE	E.C.NO.
A	09-01-64	121550L									

TENS BAR PARITY CHECK

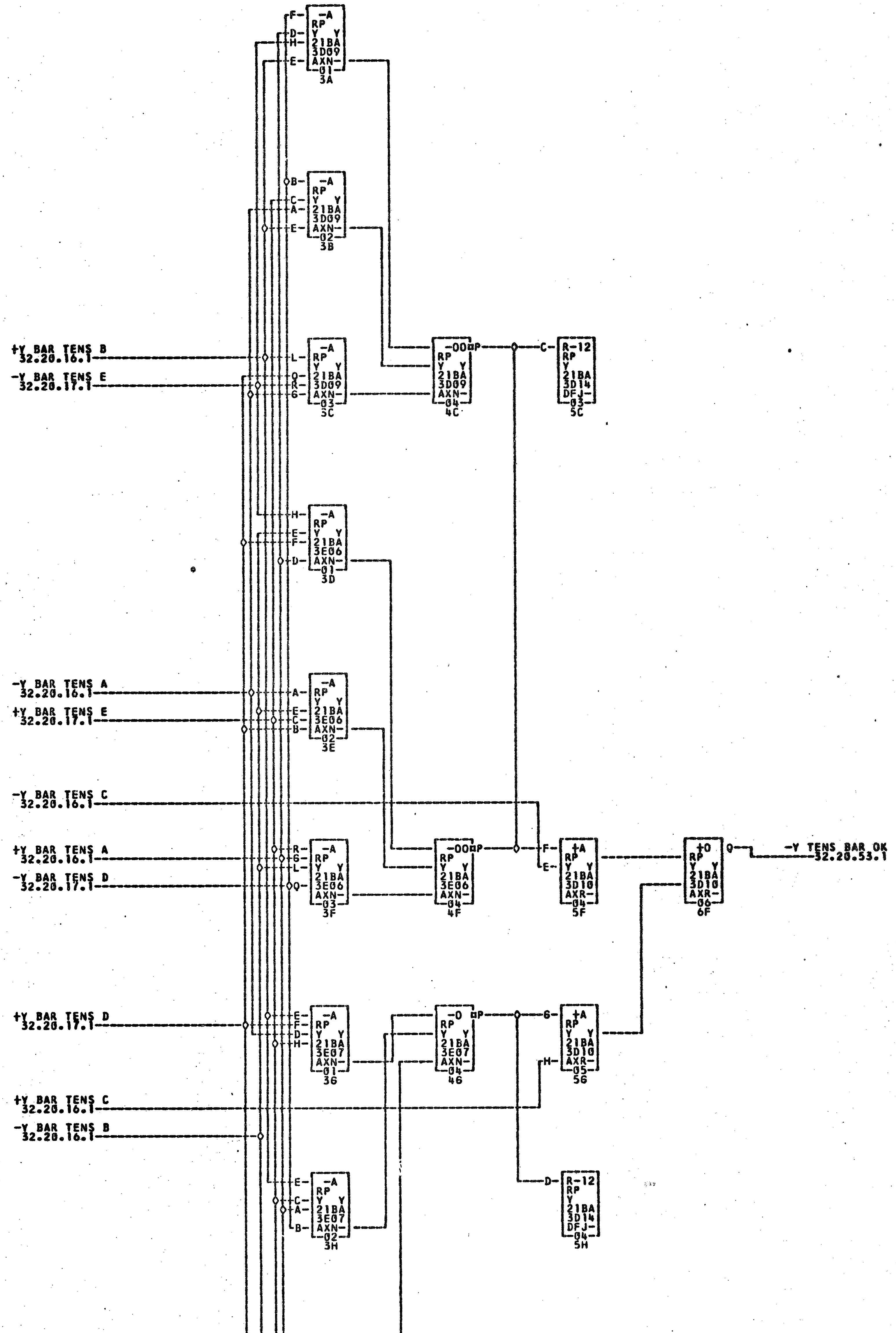
+Y BAR TENS B 32.20.16.1
-Y BAR TENS E 32.20.17.1
-Y BAR TENS A 32.20.16.1
+Y BAR TENS E 32.20.17.1
-Y BAR TENS C 32.20.16.1
+Y BAR TENS A 32.20.16.1
-Y BAR TENS D 32.20.17.1
+Y BAR TENS D 32.20.17.1
+Y BAR TENS C 32.20.16.1
-Y BAR TENS B 32.20.16.1
-A RP Y Y 21BA 3D09 AXN- -01- 3A
-A RP Y Y 21BA 3D09 AXN- -02- 3B
-A RP Y Y 21BA 3D09 AXN- -03- 3C
-A RP Y Y 21BA 3E06 AXN- -01- 3D
-A RP Y Y 21BA 3E06 AXN- -02- 3E
-A RP Y Y 21BA 3E06 AXN- -03- 3F
-A RP Y Y 21BA 3E07 AXN- -01- 3G
-A RP Y Y 21BA 3E07 AXN- -02- 3H
-A RP Y Y 21BA 3E07 AXN- -03- 3J
-OO RP Y Y 21BA 3D09 AXN- -04- 4C
-OO RP Y Y 21BA 3E06 AXN- -04- 4F
-O RP Y Y 21BA 3E07 AXN- -04- 4G
R-12 RP Y 21BA 3D14 DFJ- -03- 5C
+A RP Y Y 21BA 3D10 AXR- -04- 5F
+A RP Y Y 21BA 3D10 AXR- -05- 5G
R-12 RP Y 21BA 3D14 DFJ- -04- 5H
+O RP Y Y 21BA 3D10 AXR- -06- 6F
-Y TENS BAR OK 32.20.53.1

COMMENTS	TAG	DATE	E.C.NO.	TAG	DATE	E.C.NO.	TAG	DATE	E.C.NO.	TAG	DATE	E.C.NO.
	A	09-01-64	121550L									

0826665 SWITCH CORE MATRIX VR CONTROL 2821 32.20.21.1

201

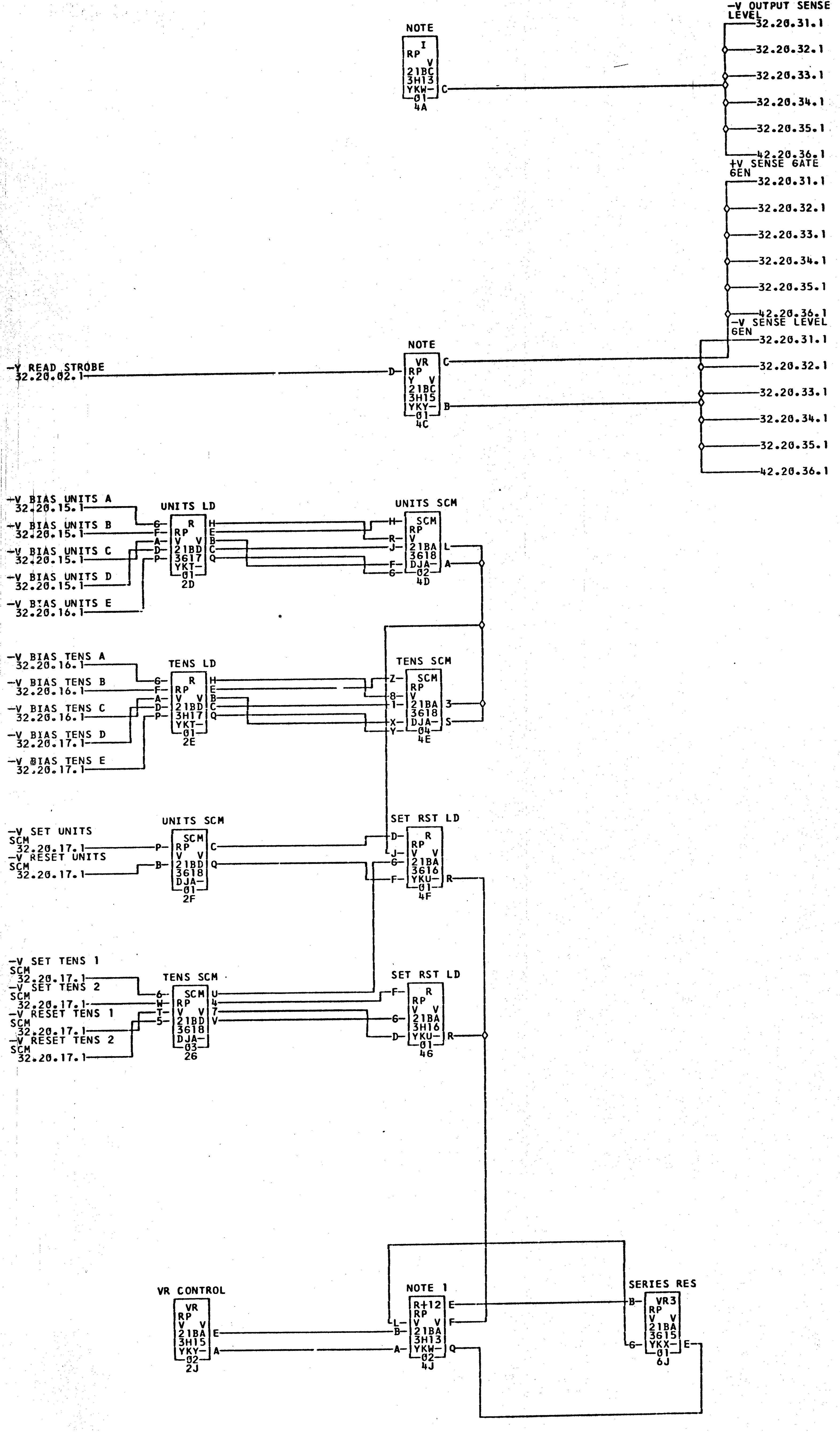
NOTE
I
RP
V
21BC
3H13
YKW-
01
4A
C
-V OUTPUT SENSE LEVEL
32.20.31.1
32.20.32.1
32.20.33.1
32.20.34.1
32.20.35.1
42.20.36.1
+V SENSE GATE GEN
32.20.31.1
32.20.32.1
32.20.33.1
32.20.34.1
32.20.35.1
42.20.36.1
-V SENSE LEVEL GEN
32.20.31.1
32.20.32.1
32.20.33.1
32.20.34.1
32.20.35.1
42.20.36.1
-V READ STROBE
32.20.02.1
NOTE
VR
RP
Y V
21BC
3H15
YKY-
01
4C
D
C
B
-V BIAS UNITS A
32.20.15.1
-V BIAS UNITS B
32.20.15.1
-V BIAS UNITS C
32.20.15.1
-V BIAS UNITS D
32.20.15.1
-V BIAS UNITS E
32.20.16.1
UNITS LD
R
RP
V V
21BD
3617
YKT-
01
2D
G F A D P
H E B C Q
UNITS SCM
SCM
RP
V
21BA
3618
DJA-
02
4D
H R J F G
L A
-V BIAS TENS A
32.20.16.1
-V BIAS TENS B
32.20.16.1
-V BIAS TENS C
32.20.16.1
-V BIAS TENS D
32.20.17.1
-V BIAS TENS E
32.20.17.1
TENS LD
R
RP
V V
21BD
3H17
YKT-
01
2E
G F A D P
H E B C Q
TENS SCM
SCM
RP
V
21BA
3618
DJA-
04
4E
Z 8 1 X Y
3 S
-V SET UNITS SCM
32.20.17.1
-V RESET UNITS SCM
32.20.17.1
UNITS SCM
SCM
RP
V V
21BD
3618
DJA-
01
2F
P B
C Q
SET RST LD
R
RP
V V
21BA
3616
YKU-
01
4F
D J G F
R
-V SET TENS 1 SCM
32.20.17.1
-V SET TENS 2 SCM
32.20.17.1
-V RESET TENS 1 SCM
32.20.17.1
-V RESET TENS 2 SCM
32.20.17.1
TENS SCM
SCM
RP
V V
21BD
3618
DJA-
03
2G
G W T 5
U 4 7 V
SET RST LD
R
RP
V V
21BA
3H16
YKU-
01
4G
F G D
R
VR CONTROL
VR
RP
V V
21BA
3H15
YKY-
02
2J
E A
NOTE 1
R+12
RP
V V
21BA
3H13
YKW-
02
4J
L B A
E F Q
SERIES RES
VR3
RP
V V
21BA
3615
YKX-
01
6J
B G
E

COMMENTS
NOTE REFER TO THE 2821 F.E
MAINTENANCE MANUAL 225-3383 FOR
BUFFER ADJUSTMENT PROCEDURE

TAG	DATE	E.C.NO.
A	09-01-64	121550L
B	10-15-64	121567
C	04-28-66	125637
D	03-10-67	125658

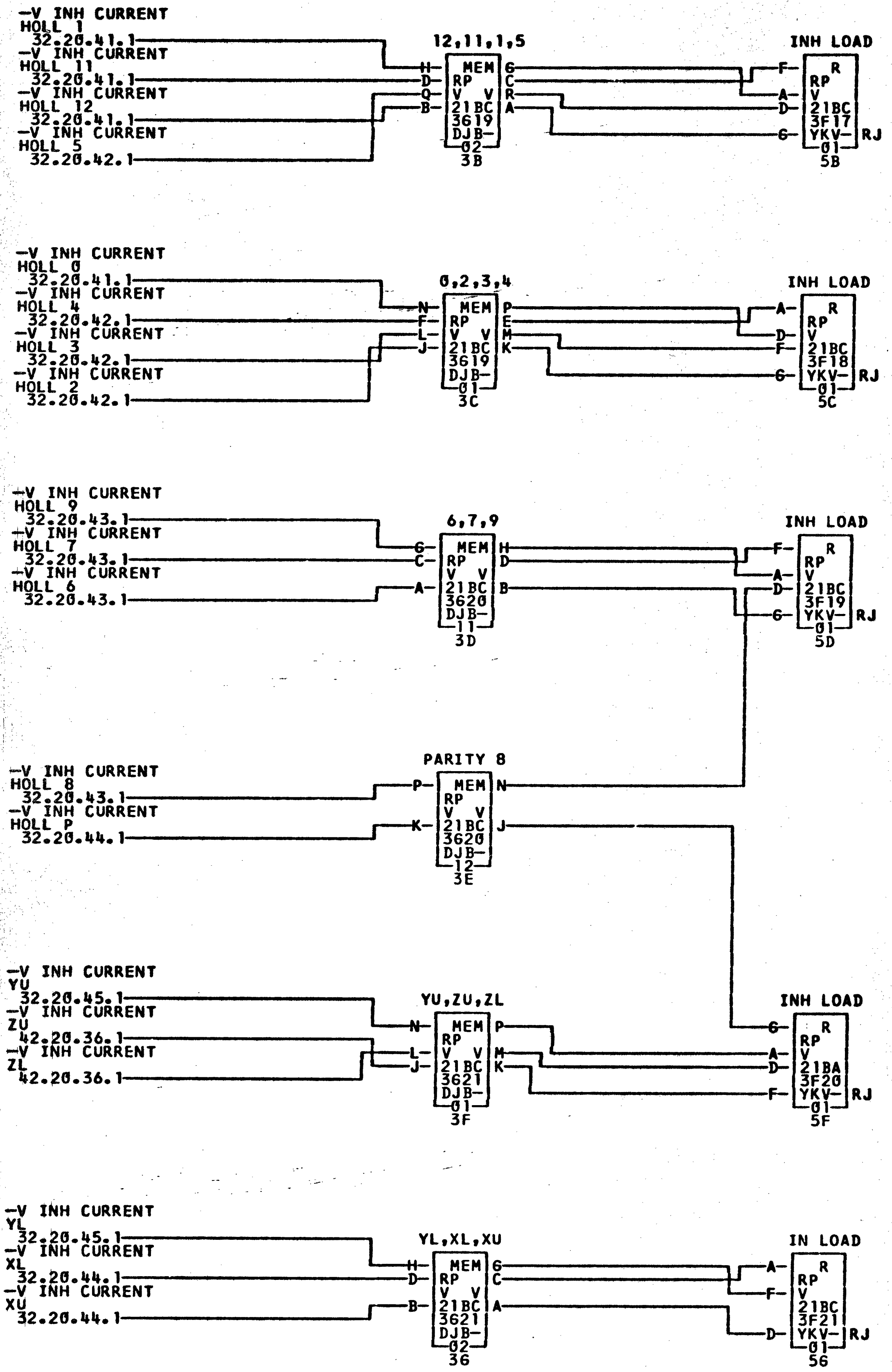
-V INH CURRENT
HOLL 1
32.20.41.1
-V INH CURRENT
HOLL 11
32.20.41.1
-V INH CURRENT
HOLL 12
32.20.41.1
-V INH CURRENT
HOLL 5
32.20.42.1
12,11,1,5
H D Q B
MEM RP V V 21BC 3619 DJB 02 3B
G C R A
INH LOAD
F A D G
R RP V 21BC 3F17 YKV 01 5B
RJ
-V INH CURRENT
HOLL 0
32.20.41.1
-V INH CURRENT
HOLL 4
32.20.42.1
-V INH CURRENT
HOLL 3
32.20.42.1
-V INH CURRENT
HOLL 2
32.20.42.1
0,2,3,4
N F L J
MEM RP V V 21BC 3619 DJB 01 3C
P E M K
INH LOAD
A D F G
R RP V 21BC 3F18 YKV 01 5C
RJ
-V INH CURRENT
HOLL 9
32.20.43.1
-V INH CURRENT
HOLL 7
32.20.43.1
-V INH CURRENT
HOLL 6
32.20.43.1
6,7,9
G C A
MEM RP V V 21BC 3620 DJB 11 3D
H D B
INH LOAD
F A D G
R RP V 21BC 3F19 YKV 01 5D
RJ
-V INH CURRENT
HOLL 8
32.20.43.1
-V INH CURRENT
HOLL P
32.20.44.1
PARITY 8
P K
MEM RP V V 21BC 3620 DJB 12 3E
N J
-V INH CURRENT
YU
32.20.45.1
-V INH CURRENT
ZU
42.20.36.1
-V INH CURRENT
ZL
42.20.36.1
YU,ZU,ZL
N L J
MEM RP V V 21BC 3621 DJB 01 3F
P M K
INH LOAD
G A D F
R RP V 21BA 3F20 YKV 01 5F
RJ
-V INH CURRENT
YL
32.20.45.1
-V INH CURRENT
XL
32.20.44.1
-V INH CURRENT
XU
32.20.44.1
YL,XL,XU
H D B
MEM RP V V 21BC 3621 DJB 02 3G
G C A
IN LOAD
A F D
R RP V 21BC 3F21 YKV 01 5G
RJ

COMMENTS
MDM.4041-4060-4061-4460-4460-4461
5021-5421

TAG	DATE	E.C.NO.	TAG	DATE	E.C.NO.	TAG	DATE	E.C.NO.	TAG	DATE	E.C.NO.
A	09-01-64	121550L	B	10-15-64	121567	C	01-21-65	121589	D	03-10-67	125658

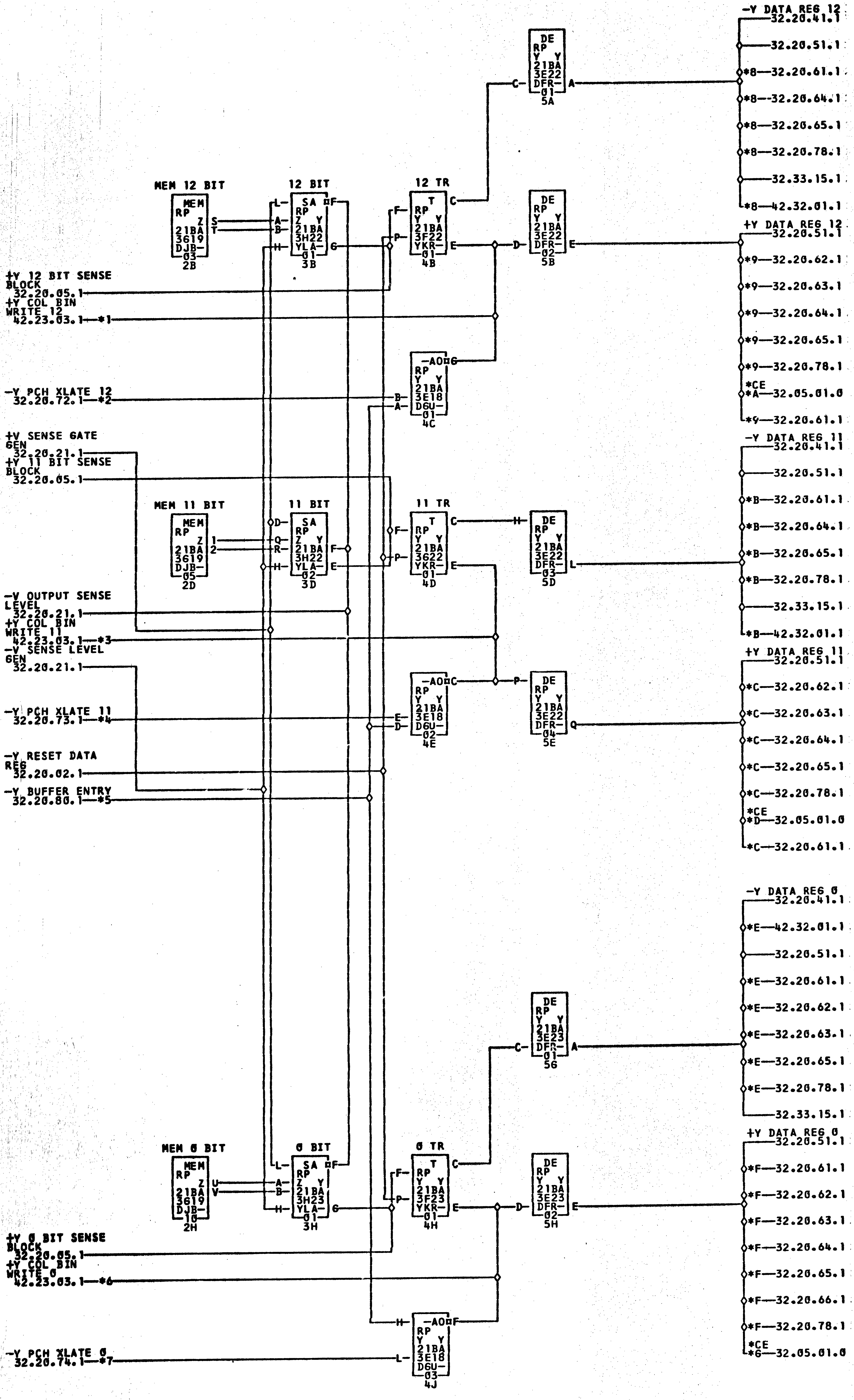

-Y DATA REG 12
32.20.41.1
32.20.51.1
*8—32.20.61.1
*8—32.20.64.1
*8—32.20.65.1
*8—32.20.78.1
32.33.15.1
*8—42.32.01.1
DE RP Y Y 21BA 3E22 DFR 01 5A
C
A
MEM 12 BIT
MEM RP Z 21BA 3619 DJB 03 2B
S
T
12 BIT
SA RP Z Y 21BA 3H22 YLA 01 3B
L A B H F G
12 TR
T RP Y Y 21BA 3F22 YKR 01 4B
F P C E
DE RP Y Y 21BA 3E22 DFR 02 5B
D E
+Y DATA REG 12
32.20.51.1
*9—32.20.62.1
*9—32.20.63.1
*9—32.20.64.1
*9—32.20.65.1
*9—32.20.78.1
*CE
*A—32.05.01.0
*9—32.20.61.1
+Y 12 BIT SENSE BLOCK 32.20.05.1
+Y COL BIN WRITE 12 42.23.03.1—*1
-AO G RP Y Y 21BA 3E18 D6U 01 4C
B A
-Y PCH XLATE 12 32.20.72.1—*2
+Y SENSE GATE GEN 32.20.21.1
+Y 11 BIT SENSE BLOCK 32.20.05.1
-Y DATA REG 11
32.20.41.1
32.20.51.1
*B—32.20.61.1
*B—32.20.64.1
*B—32.20.65.1
*B—32.20.78.1
32.33.15.1
*B—42.32.01.1
MEM 11 BIT
MEM RP Z 21BA 3619 DJB 05 2D
1
2
11 BIT
SA RP Z Y 21BA 3H22 YLA 02 3D
D Q R H F E
11 TR
T RP Y Y 21BA 3622 YKR 01 4D
F P C E
H
DE RP Y Y 21BA 3E22 DFR 03 5D
L
-V OUTPUT SENSE LEVEL 32.20.21.1
+Y COL BIN WRITE 11 42.23.03.1—*3
-V SENSE LEVEL GEN 32.20.21.1
-AO C RP Y Y 21BA 3E18 D6U 02 4E
E D
P
DE RP Y Y 21BA 3E22 DFR 04 5E
Q
+Y DATA REG 11
32.20.51.1
*C—32.20.62.1
*C—32.20.63.1
*C—32.20.64.1
*C—32.20.65.1
*C—32.20.78.1
*CE
*D—32.05.01.0
*C—32.20.61.1
-Y PCH XLATE 11 32.20.73.1—*4
-Y RESET DATA REG 32.20.02.1
-Y BUFFER ENTRY 32.20.80.1—*5
-Y DATA REG 0
32.20.41.1
*E—42.32.01.1
32.20.51.1
*E—32.20.61.1
*E—32.20.62.1
*E—32.20.63.1
*E—32.20.65.1
*E—32.20.78.1
32.33.15.1
DE RP Y Y 21BA 3E23 DFR 01 5G
C
A
+Y DATA REG 0
32.20.51.1
*F—32.20.61.1
*F—32.20.62.1
*F—32.20.63.1
*F—32.20.64.1
*F—32.20.65.1
*F—32.20.66.1
*F—32.20.78.1
*CE
*6—32.05.01.0
MEM 0 BIT
MEM RP Z 21BA 3619 DJB 10 2H
U
V
0 BIT
SA RP Z Y 21BA 3H23 YLA 01 3H
L A B H F G
0 TR
T RP Y Y 21BA 3F23 YKR 01 4H
F P C E
DE RP Y Y 21BA 3E23 DFR 02 5H
D E
+Y 0 BIT SENSE BLOCK 32.20.05.1
+Y COL BIN WRITE 0 42.23.03.1—*6
-AO F RP Y Y 21BA 3E18 D6U 03 4J
H L
-Y PCH XLATE 0 32.20.74.1—*7

*1—21B3B31A
*7—21B3C32C
—CERPA001
—CERPA002
—CERPA003

*2—21B3C32A
*8—21B3H32D
*B—21B3H32E
*E—21B3H32F

*3—21B3B31B
—21B4F02D
—21B4F02E
—21B4F02F

*4—21B3C32B
*9—21B3632G
*C—21B3632H
*F—21B3632K

*5—21B3C32Q
—21B4E02G
—21B4E02H
—21B4E02K

*6—21B3B31C
*A—21B3C01M
*D—21B3C01N
*6—21B3C01P

COMMENTS
MDM.4020-4040-4060-4061-4440-4460-4461

TAG	DATE	E.C.NO.	TAG	DATE	E.C.NO.	TAG	DATE	E.C.NO.	TAG	DATE	E.C.NO.
A	09-01-64	121550L	B	10-15-64	121567	C	12-19-64	121583	D	02-15-65	121594
E	11-19-65	125601	F	03-10-67	125658						

2-1

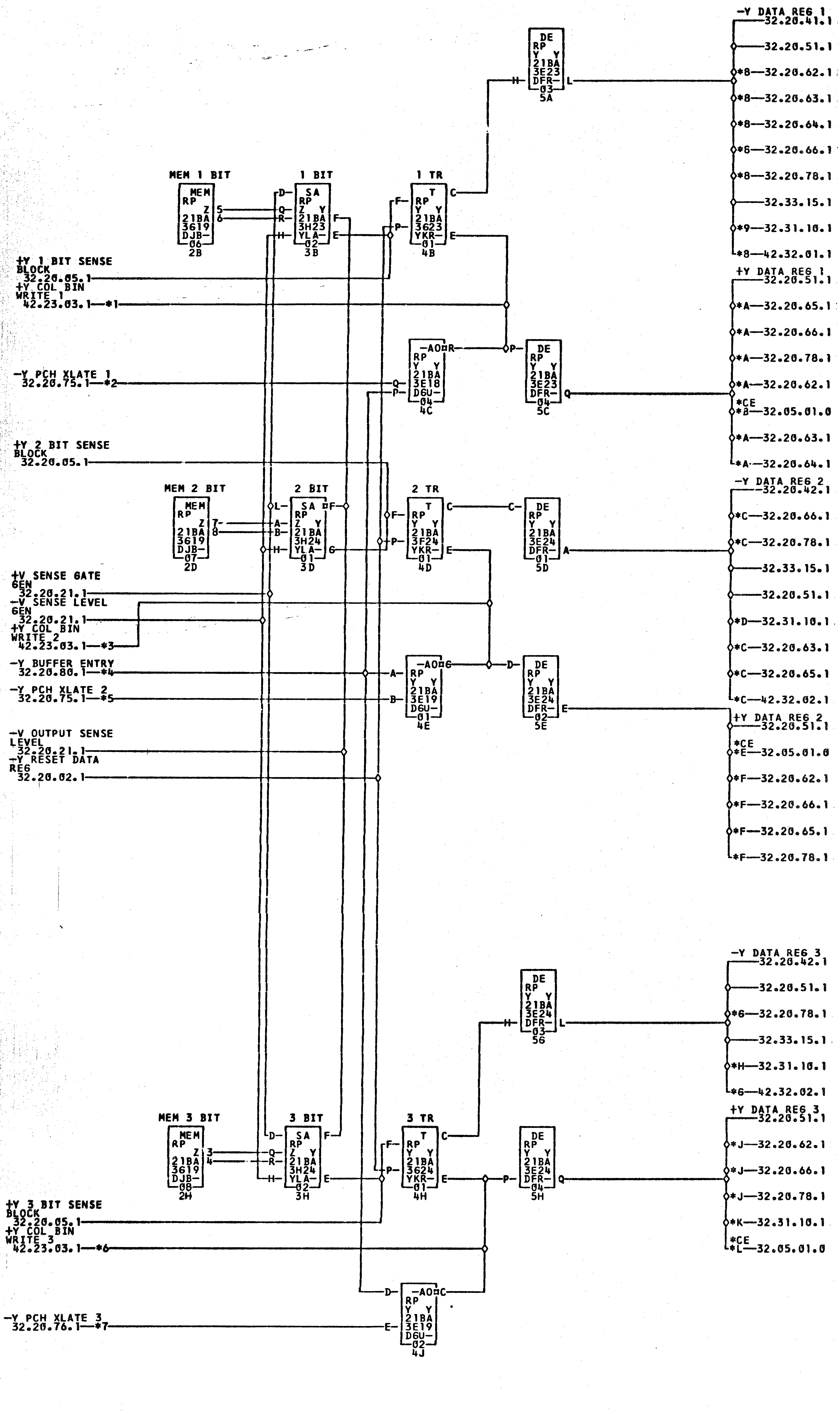
MEM 1 BIT
MEM RP Z 21BA 3619 DJB-06 2B
1 BIT
SA RP Z Y 21BA 3H23 YLA-02 3B
1 TR
T RP Y Y 21BA 3G23 YKR-01 4B
DE RP Y Y 21BA 3E23 DFR-03 5A
-Y DATA REG 1
32.20.41.1
32.20.51.1
*8—32.20.62.1
*8—32.20.63.1
*8—32.20.64.1
*6—32.20.66.1
*8—32.20.78.1
32.33.15.1
*9—32.31.10.1
*8—42.32.01.1
+Y 1 BIT SENSE BLOCK 32.20.05.1
+Y COL BIN WRITE 1 42.23.03.1—*1
-AO RP Y Y 21BA 3E18 D6U-04 4C
-Y PCH XLATE 1 32.20.75.1—*2
DE RP Y Y 21BA 3E23 DFR-04 5C
+Y DATA REG 1
32.20.51.1
*A—32.20.65.1
*A—32.20.66.1
*A—32.20.78.1
*A—32.20.62.1
*CE *B—32.05.01.0
*A—32.20.63.1
*A—32.20.64.1
+Y 2 BIT SENSE BLOCK 32.20.05.1
MEM 2 BIT
MEM RP Z 21BA 3619 DJB-07 2D
2 BIT
SA RP Z Y 21BA 3H24 YLA-01 3D
2 TR
T RP Y Y 21BA 3F24 YKR-01 4D
DE RP Y Y 21BA 3E24 DFR-01 5D
-Y DATA REG 2
32.20.42.1
*C—32.20.66.1
*C—32.20.78.1
32.33.15.1
32.20.51.1
*D—32.31.10.1
*C—32.20.63.1
*C—32.20.65.1
*C—42.32.02.1
+V SENSE GATE GEN 32.20.21.1
-V SENSE LEVEL GEN 32.20.21.1
+Y COL BIN WRITE 2 42.23.03.1—*3
-Y BUFFER ENTRY 32.20.80.1—*4
-Y PCH XLATE 2 32.20.75.1—*5
-AO RP Y Y 21BA 3E19 D6U-01 4E
DE RP Y Y 21BA 3E24 DFR-02 5E
+Y DATA REG 2
32.20.51.1
*CE *E—32.05.01.0
*F—32.20.62.1
*F—32.20.66.1
*F—32.20.65.1
*F—32.20.78.1
-V OUTPUT SENSE LEVEL 32.20.21.1
-Y RESET DATA REG 32.20.02.1
DE RP Y Y 21BA 3E24 DFR-03 5G
-Y DATA REG 3
32.20.42.1
32.20.51.1
*6—32.20.78.1
32.33.15.1
*H—32.31.10.1
*6—42.32.02.1
MEM 3 BIT
MEM RP Z 21BA 3619 DJB-08 2H
3 BIT
SA RP Z Y 21BA 3H24 YLA-02 3H
3 TR
T RP Y Y 21BA 3624 YKR-01 4H
DE RP Y Y 21BA 3E24 DFR-04 5H
+Y DATA REG 3
32.20.51.1
*J—32.20.62.1
*J—32.20.66.1
*J—32.20.78.1
*K—32.31.10.1
*CE *L—32.05.01.0
+Y 3 BIT SENSE BLOCK 32.20.05.1
+Y COL BIN WRITE 3 42.23.03.1—*6
-AO RP Y Y 21BA 3E19 D6U-02 4J
-Y PCH XLATE 3 32.20.76.1—*7

*1—21B3B31D
*7—21B3C32F
———21B4E02L
———21B1T04D
———21B4F02K
———21B1T05B

*2—21B3C32D
*8—21B3H326
*B—21B3C01Q
*E—21B3C01R
*H—21B3T05A
*L—21B3C02A

*3—21B3B31E
———21B4F026
———CERPA004
———CERPA005
———21B1T05A
———CERPA006

*4—21B3C32Q
*9—21B3T04C
*C—21B3H32H
*F—21B3632M
*J—21B3632N

*5—21B3C32E
———21B1T04C
———21B4F02H
———21B4E02M
———21B4E02N

*6—21B3B31F
*A—21B3632L
*D—21B3T04D
*6—21B3H32K
*K—21B3T05B

COMMENTS
MDM.4020-4040-4060-4440-4460-4461

TAG	DATE	E.C.NO.	TAG	DATE	E.C.NO.	TAG	DATE	E.C.NO.	TAG	DATE	E.C.NO.
A	09-01-64	121550L	B	10-15-64	121567	C	12-19-64	121583	D	02-15-65	121594
E	11-19-65	125601	F	03-10-67	125658						

0826669 **DATA REGISTER 4, 5 AND 6** 2821 32.20.33.1 2-1

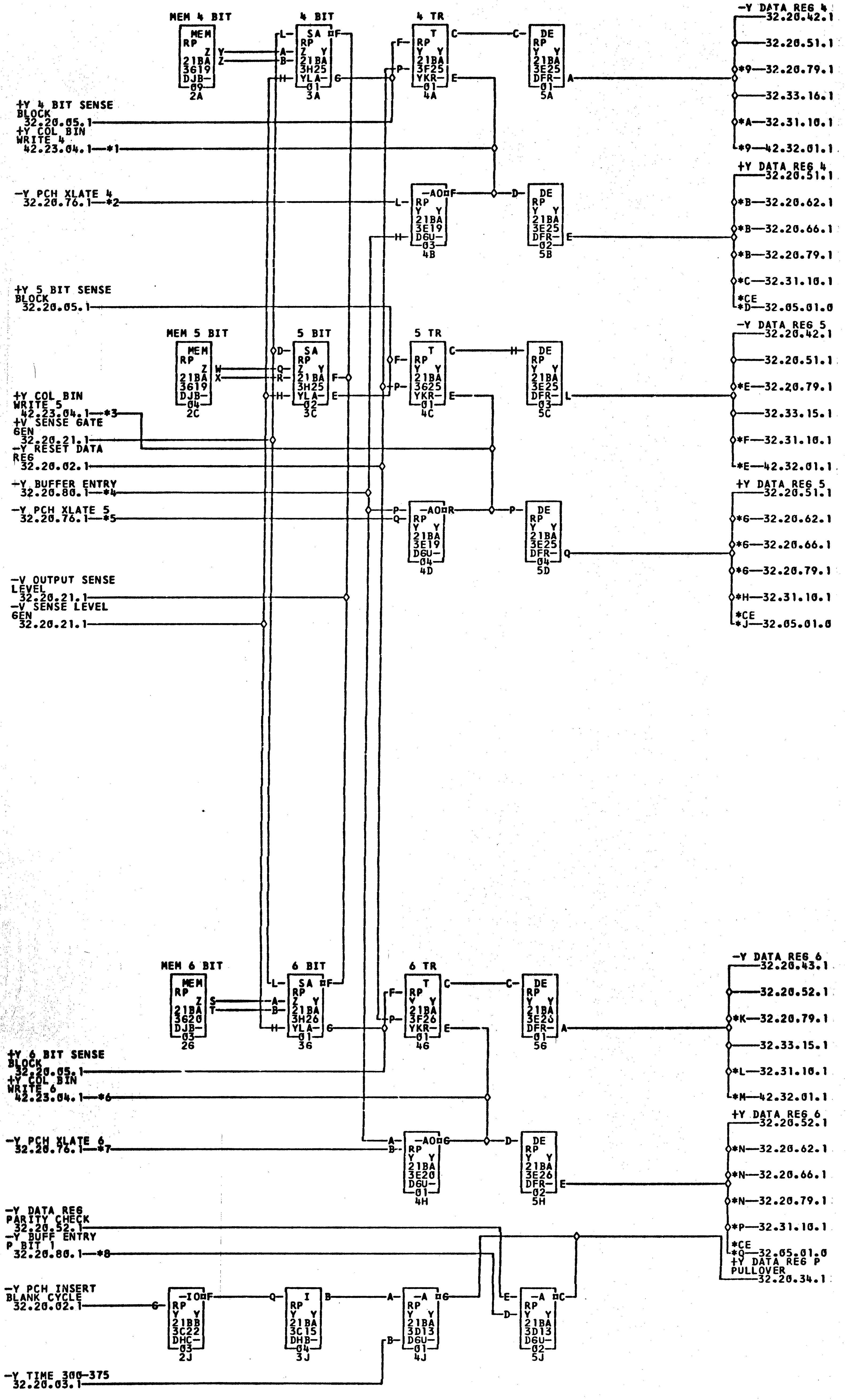
MEM 4 BIT
MEM RP Z 21BA 3G19 DJB- 09 2A
4 BIT
SA RP Z Y 21BA 3H25 YLA- 01 3A
4 TR
T RP Y Y 21BA 3F25 YKR- 01 4A
DE RP Y Y 21BA 3E25 DFR- 01 5A
-Y DATA REG 4 32.20.42.1
32.20.51.1
*9—32.20.79.1
32.33.16.1
*A—32.31.10.1
*9—42.32.01.1
+Y 4 BIT SENSE BLOCK 32.20.05.1
+Y COL BIN WRITE 4 42.23.04.1—*1
-Y PCH XLATE 4 32.20.76.1—*2
-AO RP Y Y 21BA 3E19 D6U- 03 4B
DE RP Y Y 21BA 3E25 DFR- 02 5B
+Y DATA REG 4 32.20.51.1
*B—32.20.62.1
*B—32.20.66.1
*B—32.20.79.1
*C—32.31.10.1
*CE *D—32.05.01.0
+Y 5 BIT SENSE BLOCK 32.20.05.1
MEM 5 BIT
MEM RP Z 21BA 3G19 DJB- 04 2C
5 BIT
SA RP Z Y 21BA 3H25 YLA- 02 3C
5 TR
T RP Y Y 21BA 3G25 YKR- 01 4C
DE RP Y Y 21BA 3E25 DFR- 03 5C
-Y DATA REG 5 32.20.42.1
32.20.51.1
*E—32.20.79.1
32.33.15.1
*F—32.31.10.1
*E—42.32.01.1
+Y COL BIN WRITE 5 42.23.04.1—*3
+Y SENSE GATE GEN 32.20.21.1
-Y RESET DATA REG 32.20.02.1
+Y BUFFER ENTRY 32.20.80.1—*4
-Y PCH XLATE 5 32.20.76.1—*5
-AO RP Y Y 21BA 3E19 D6U- 04 4D
DE RP Y Y 21BA 3E25 DFR- 04 5D
+Y DATA REG 5 32.20.51.1
*G—32.20.62.1
*G—32.20.66.1
*G—32.20.79.1
*H—32.31.10.1
*CE *J—32.05.01.0
-Y OUTPUT SENSE LEVEL 32.20.21.1
-Y SENSE LEVEL GEN 32.20.21.1
MEM 6 BIT
MEM RP Z 21BA 3G20 DJB- 03 2G
6 BIT
SA RP Z Y 21BA 3H26 YLA- 01 3G
6 TR
T RP Y Y 21BA 3F26 YKR- 01 4G
DE RP Y Y 21BA 3E26 DFR- 01 5G
-Y DATA REG 6 32.20.43.1
32.20.52.1
*K—32.20.79.1
32.33.15.1
*L—32.31.10.1
*M—42.32.01.1
+Y 6 BIT SENSE BLOCK 32.20.05.1
+Y COL BIN WRITE 6 42.23.04.1—*6
-Y PCH XLATE 6 32.20.76.1—*7
-AO RP Y Y 21BA 3E20 D6U- 01 4H
DE RP Y Y 21BA 3E26 DFR- 02 5H
+Y DATA REG 6 32.20.52.1
*N—32.20.62.1
*N—32.20.66.1
*N—32.20.79.1
*P—32.31.10.1
*CE *Q—32.05.01.0
+Y DATA REG 6 P PULLOVER 32.20.34.1
-Y DATA REG PARITY CHECK 32.20.52.1
-Y BUFF ENTRY P BIT 1 32.20.80.1—*8
-Y PCH INSERT BLANK CYCLE 32.20.02.1
-IO RP Y Y 21BB 3C22 DHC- 03 2J
I RP Y Y 21BA 3C15 DHB- 04 3J
-A RP Y Y 21BA 3D13 D6U- 01 4J
-A RP Y Y 21BA 3D13 D6U- 02 5J
-Y TIME 300-375 32.20.03.1

*1—21B3B31G
*7—21B3C32K
*B—21B3G32P
*E—21B3H32M
*H—21B3T06B
*L—21B3T06C
——21B4E02R

*2—21B3C32G
*8—21B3G32E
——21B4E02P
——21B4F02M
——21B1T06B
——21B1T06C
*P—21B3T06D

*3—21B3B31H
*9—21B3H32L
*C—21B3T05D
*F—21B3T06A
*J—21B3C02C
*M—21B321B3
——21B1T06D

*4—21B3C32Q
——21B4F02L
——21B1T05D
——21B1T06A
——CERPA008
——H32N21B4
*Q—21B3C02D

*5—21B3C32H
*A—21B3T05C
*D—21B3C02B
*G—21B3G32Q
*K—21B3H32N
——F02N
——CERPA009

*6—21B3B31K
——21B1T05C
——CERPA007
——21B4E02Q
——21B4F02N
*N—21B3G32R

COMMENTS	TAG	DATE	E.C.NO.	TAG	DATE	E.C.NO.	TAG	DATE	E.C.NO.	TAG	DATE	E.C.NO.
MDM.4023-4040-4060-4061-4440-4460-4461	A	09-01-64	121550L	B	10-15-64	121567	C	12-19-64	121583	D	02-15-65	121594
	E	11-19-65	125601	F	03-10-67	125658						

2-1

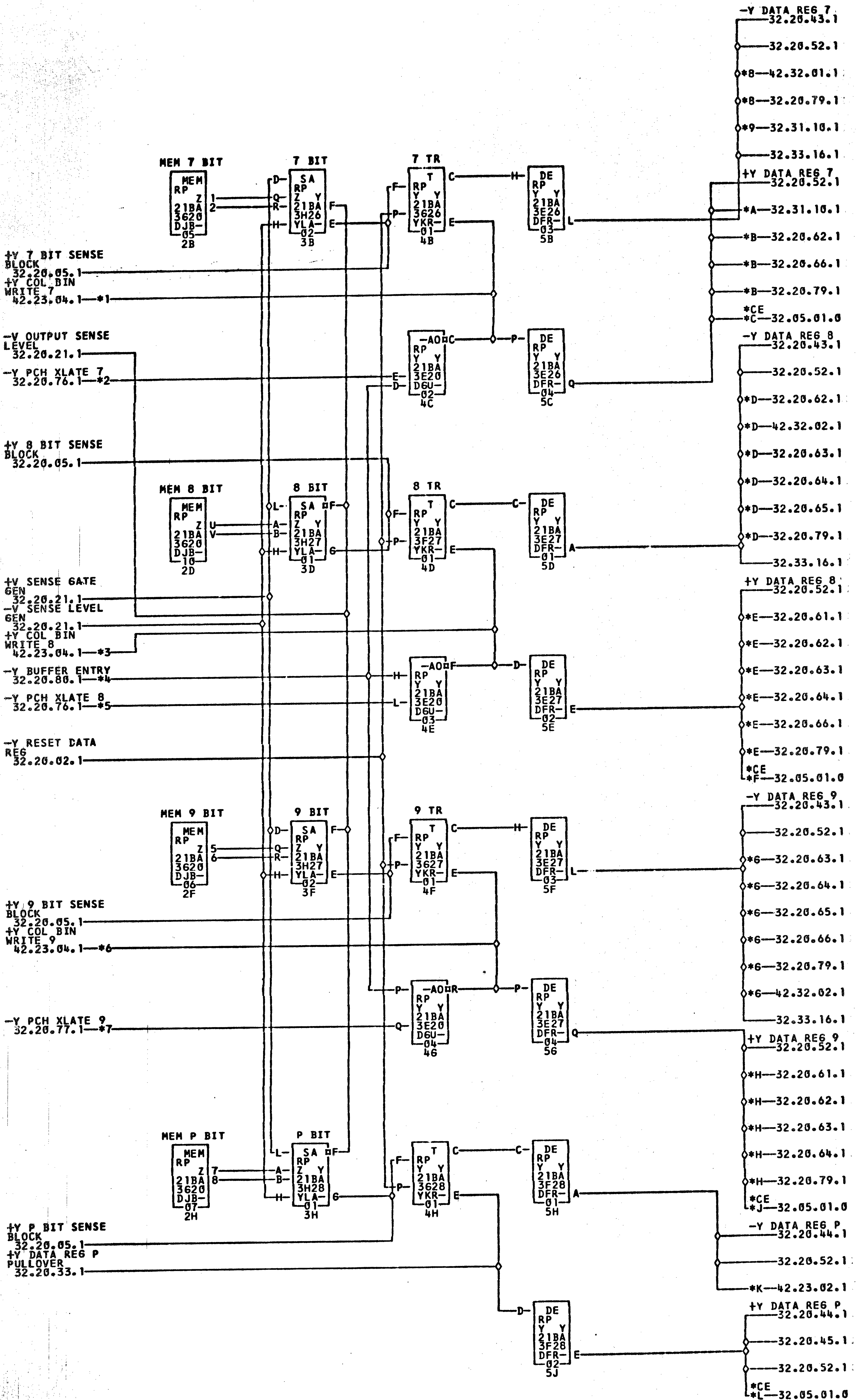
MEM 7 BIT
MEM RP Z 21BA 3620 DJB-05 2B
7 BIT
SA RP Z Y 21BA 3H26 YLA-02 3B
7 TR
T RP Y Y 21BA 3626 YKR-01 4B
DE RP Y Y 21BA 3E26 DFR-03 5B
+Y 7 BIT SENSE BLOCK 32.20.05.1
+Y COL BIN WRITE 7 42.23.04.1—*1
-V OUTPUT SENSE LEVEL 32.20.21.1
-Y PCH XLATE 7 32.20.76.1—*2
-AO RP Y Y 21BA 3E20 D6U-02 4C
DE RP Y Y 21BA 3E26 DFR-04 5C
-Y DATA REG 7 32.20.43.1
32.20.52.1
*8—42.32.01.1
*8—32.20.79.1
*9—32.31.10.1
32.33.16.1
+Y DATA REG 7 32.20.52.1
*A—32.31.10.1
*B—32.20.62.1
*B—32.20.66.1
*B—32.20.79.1
*CE *C—32.05.01.0
+Y 8 BIT SENSE BLOCK 32.20.05.1
MEM 8 BIT
MEM RP Z 21BA 3620 DJB-10 2D
8 BIT
SA RP Z Y 21BA 3H27 YLA-01 3D
8 TR
T RP Y Y 21BA 3F27 YKR-01 4D
DE RP Y Y 21BA 3E27 DFR-01 5D
-Y DATA REG 8 32.20.43.1
32.20.52.1
*D—32.20.62.1
*D—42.32.02.1
*D—32.20.63.1
*D—32.20.64.1
*D—32.20.65.1
*D—32.20.79.1
32.33.16.1
+V SENSE GATE GEN 32.20.21.1
-V SENSE LEVEL GEN 32.20.21.1
+Y COL BIN WRITE 8 42.23.04.1—*3
-Y BUFFER ENTRY 32.20.80.1—*4
-Y PCH XLATE 8 32.20.76.1—*5
-AO RP Y Y 21BA 3E20 D6U-03 4E
DE RP Y Y 21BA 3E27 DFR-02 5E
+Y DATA REG 8 32.20.52.1
*E—32.20.61.1
*E—32.20.62.1
*E—32.20.63.1
*E—32.20.64.1
*E—32.20.66.1
*E—32.20.79.1
*CE *F—32.05.01.0
-Y RESET DATA REG 32.20.02.1
MEM 9 BIT
MEM RP Z 21BA 3620 DJB-06 2F
9 BIT
SA RP Z Y 21BA 3H27 YLA-02 3F
9 TR
T RP Y Y 21BA 3627 YKR-01 4F
DE RP Y Y 21BA 3E27 DFR-03 5F
-Y DATA REG 9 32.20.43.1
32.20.52.1
*6—32.20.63.1
*6—32.20.64.1
*6—32.20.65.1
*6—32.20.66.1
*6—32.20.79.1
*6—42.32.02.1
32.33.16.1
+Y 9 BIT SENSE BLOCK 32.20.05.1
+Y COL BIN WRITE 9 42.23.04.1—*6
-AO RP Y Y 21BA 3E20 D6U-04 46
DE RP Y Y 21BA 3E27 DFR-04 56
-Y PCH XLATE 9 32.20.77.1—*7
+Y DATA REG 9 32.20.52.1
*H—32.20.61.1
*H—32.20.62.1
*H—32.20.63.1
*H—32.20.64.1
*H—32.20.79.1
*CE *J—32.05.01.0
MEM P BIT
MEM RP Z 21BA 3620 DJB-07 2H
P BIT
SA RP Z Y 21BA 3H28 YLA-01 3H
T RP Y Y 21BA 3628 YKR-01 4H
DE RP Y Y 21BA 3F28 DFR-01 5H
-Y DATA REG P 32.20.44.1
32.20.52.1
*K—42.23.02.1
+Y P BIT SENSE BLOCK 32.20.05.1
+Y DATA REG P PULLOVER 32.20.33.1
DE RP Y Y 21BA 3F28 DFR-02 5J
+Y DATA REG P 32.20.44.1
32.20.45.1
32.20.52.1
*CE *L—32.05.01.0

*1—21B3B31L
*7—21B3C32N
—21B1T07B
—21B4F02Q
—21B4F02R
—21B4E02F

*2—21B3C32L
*8—21B3H32P
*B—21B3H32A
*E—21B3H32B
*H—21B3H32C
*L—21B3C02H

*3—21B3B31M
—21B4F02P
—21B4F02A
—21B4F02B
—21B4F02C
—CERPA013

*4—21B3C32Q
*9—21B3T07A
*C—21B3C02E
*F—21B3C02F
*J—21B3C026

*5—21B3C32M
—21B1T07A
—CERPA010
—CERPA011
—CERPA012

*6—21B3B31N
*A—21B3T07B
*D—21B3H32Q
*6—21B3H32R
*K—21B3632F

COMMENTS	TAG	DATE	E.C.NO.	TAG	DATE	E.C.NO.	TAG	DATE	E.C.NO.	TAG	DATE	E.C.NO.
MDM.4020-4040-4060-4061-4440-4460-4461	A	09-01-64	121550L	B	10-15-64	121567	C	12-19-64	121583	D	02-15-65	121594
	E	11-19-65	125601	F	03-10-67	125658						

DATA REGISTER XU, XL, YU, AND YL

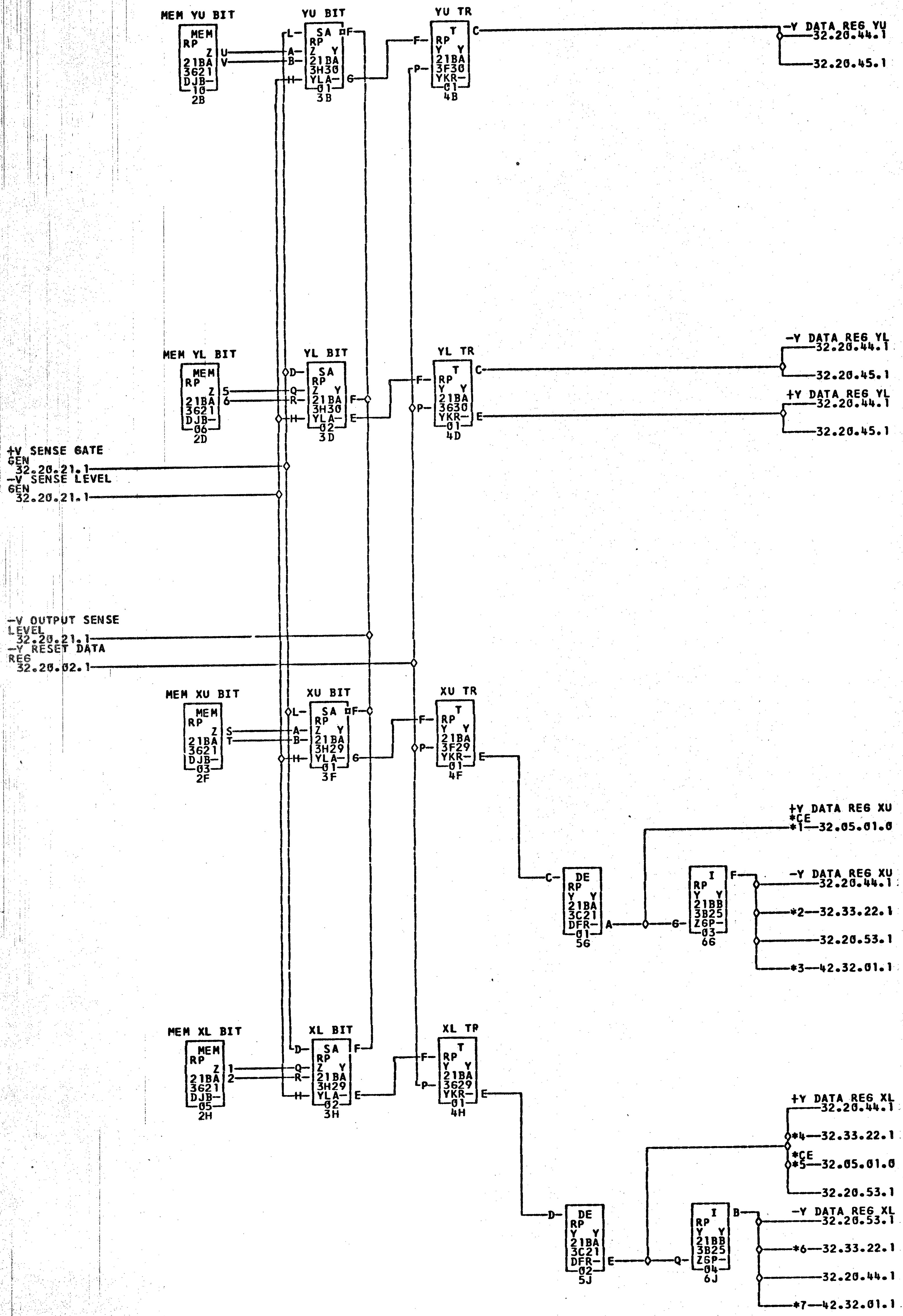
MEM YU BIT
MEM RP Z Y 21BA 3621 DJB- 10 2B
U
V
YU BIT
SA RP Z Y 21BA 3H30 YLA- 01 3B
L
A
B
H
F
G
YU TR
T RP Y Y 21BA 3F30 YKR- 01 4B
F
P
C
-Y DATA REG YU 32.20.44.1
32.20.45.1
MEM YL BIT
MEM RP Z 21BA 3621 DJB- 06 2D
5
6
YL BIT
SA RP Z Y 21BA 3H30 YLA- 02 3D
D
Q
R
H
F
E
YL TR
T RP Y Y 21BA 3630 YKR- 01 4D
F
P
C
E
-Y DATA REG YL 32.20.44.1
32.20.45.1
+Y DATA REG YL 32.20.44.1
32.20.45.1
+V SENSE GATE GEN 32.20.21.1
-V SENSE LEVEL GEN 32.20.21.1
-V OUTPUT SENSE LEVEL 32.20.21.1
-Y RESET DATA REG 32.20.02.1
MEM XU BIT
MEM RP Z 21BA 3621 DJB- 03 2F
S
T
XU BIT
SA RP Z Y 21BA 3H29 YLA- 01 3F
L
A
B
H
F
G
XU TR
T RP Y Y 21BA 3F29 YKR- 01 4F
F
P
E
C
DE RP Y Y 21BA 3C21 DFR- 01 5G
A
G
I RP Y Y 21BB 3B25 ZGP- 03 6G
F
+Y DATA REG XU *CE *1—32.05.01.0
-Y DATA REG XU 32.20.44.1
*2—32.33.22.1
32.20.53.1
*3—42.32.01.1
MEM XL BIT
MEM RP Z 21BA 3621 DJB- 05 2H
1
2
XL BIT
SA RP Z Y 21BA 3H29 YLA- 02 3H
D
Q
R
H
F
E
XL TR
T RP Y Y 21BA 3629 YKR- 01 4H
F
P
E
D
DE RP Y Y 21BA 3C21 DFR- 02 5J
E
Q
I RP Y Y 21BB 3B25 ZGP- 04 6J
B
+Y DATA REG XL 32.20.44.1
*4—32.33.22.1
*CE *5—32.05.01.0
32.20.53.1
-Y DATA REG XL 32.20.53.1
*6—32.33.22.1
32.20.44.1
*7—42.32.01.1

*1—21B3D01H ——— CERPA-29
*4—21B3T08A ——— 21B1T08A
*7—21B3F32Q ——— 21B4F01Q

*2—21B3T07C ——— 21B1T07C
*5—21B3D01R ——— CERPA030

*3—21B3B31R ——— 21B4B02R
*6—21B3T07D ——— 21B1T07D

COMMENTS
MDM.4040-4061-4440-4461-5021-5421

TAG	DATE	E.C.NO.	TAG	DATE	E.C.NO.	TAG	DATE	E.C.NO.	TAG	DATE	E.C.NO.
A	09-01-64	121550L	B	10-15-64	121567	C	11-10-64	121572	D	12-19-64	121583
E	02-15-65	121594	F	03-18-65	121598	G	04-26-65	124237	H	03-10-67	125658

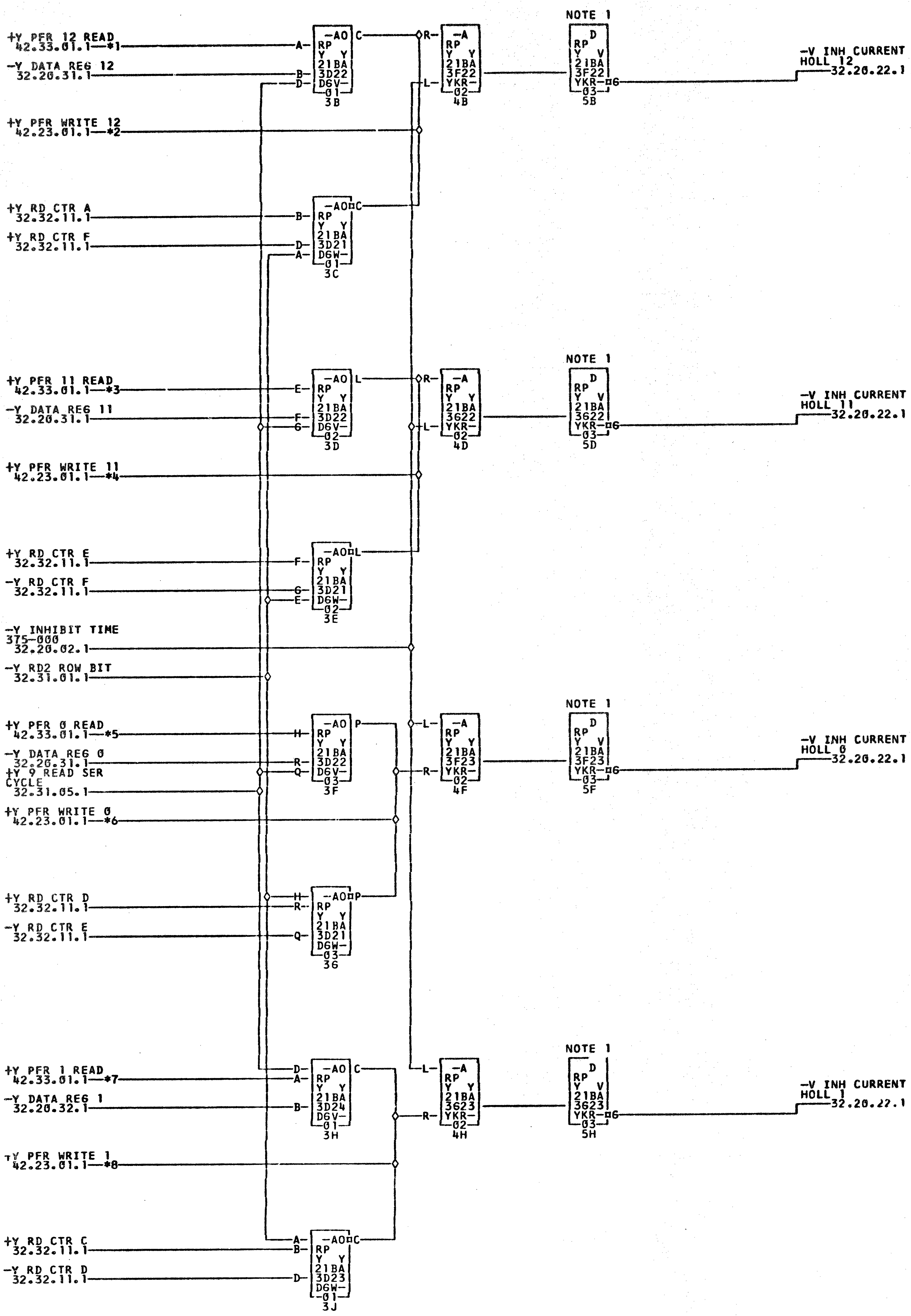
+Y PFR 12 READ
42.33.01.1—*1
-Y DATA REG 12
32.20.31.1
+Y PFR WRITE 12
42.23.01.1—*2
+Y RD CTR A
32.32.11.1
+Y RD CTR F
32.32.11.1
+Y PFR 11 READ
42.33.01.1—*3
-Y DATA REG 11
32.20.31.1
+Y PFR WRITE 11
42.23.01.1—*4
+Y RD CTR E
32.32.11.1
-Y RD CTR F
32.32.11.1
-Y INHIBIT TIME
375-000
32.20.02.1
-Y RD2 ROW BIT
32.31.01.1
+Y PFR 0 READ
42.33.01.1—*5
-Y DATA REG 0
32.20.31.1
+Y 9 READ SER
CYCLE
32.31.05.1
+Y PFR WRITE 0
42.23.01.1—*6
+Y RD CTR D
32.32.11.1
-Y RD CTR E
32.32.11.1
+Y PFR 1 READ
42.33.01.1—*7
-Y DATA REG 1
32.20.32.1
+Y PFR WRITE 1
42.23.01.1—*8
+Y RD CTR C
32.32.11.1
-Y RD CTR D
32.32.11.1
-AO RP Y Y 21BA 3D22 D6V 01 3B
-AO RP Y Y 21BA 3D21 D6W 01 3C
-AO RP Y Y 21BA 3D22 D6V 02 3D
-AO RP Y Y 21BA 3D21 D6W 02 3E
-AO RP Y Y 21BA 3D22 D6V 03 3F
-AO RP Y Y 21BA 3D21 D6W 03 3G
-AO RP Y Y 21BA 3D24 D6V 01 3H
-AO RP Y Y 21BA 3D23 D6W 01 3J
-A RP Y Y 21BA 3F22 YKR 02 4B
-A RP Y Y 21BA 3G22 YKR 02 4D
-A RP Y Y 21BA 3F23 YKR 02 4F
-A RP Y Y 21BA 3G23 YKR 02 4H
NOTE 1
D RP Y V 21BA 3F22 YKR 03 5B
D RP Y V 21BA 3G22 YKR 03 5D
D RP Y V 21BA 3F23 YKR 03 5F
D RP Y V 21BA 3G23 YKR 03 5H
G
-V INH CURRENT
HOLL 12
32.20.22.1
-V INH CURRENT
HOLL 11
32.20.22.1
-V INH CURRENT
HOLL 0
32.20.22.1
-V INH CURRENT
HOLL 1
32.20.22.1

*1—21B3E32A *7—21B3E32D *2—21B3D32A *8—21B3D32D *3—21B3E32B *4—21B3D32B *5—21B3E32C *6—21B3D32C

COMMENTS

NOTE 1—INHIBIT CURRENT 228MA MIN, 262MA MAX, 250MA NOMINAL.
MDM.4041-4441

TAG	DATE	E.C.NO.	TAG	DATE	E.C.NO.	TAG	DATE	E.C.NO.	TAG	DATE	E.C.NO.
A	09-01-64	121550L	B	10-15-64	121567	C	03-18-65	121598	D	03-10-67	125658

INHIBIT CURRENT 2, 3, 4, AND 5

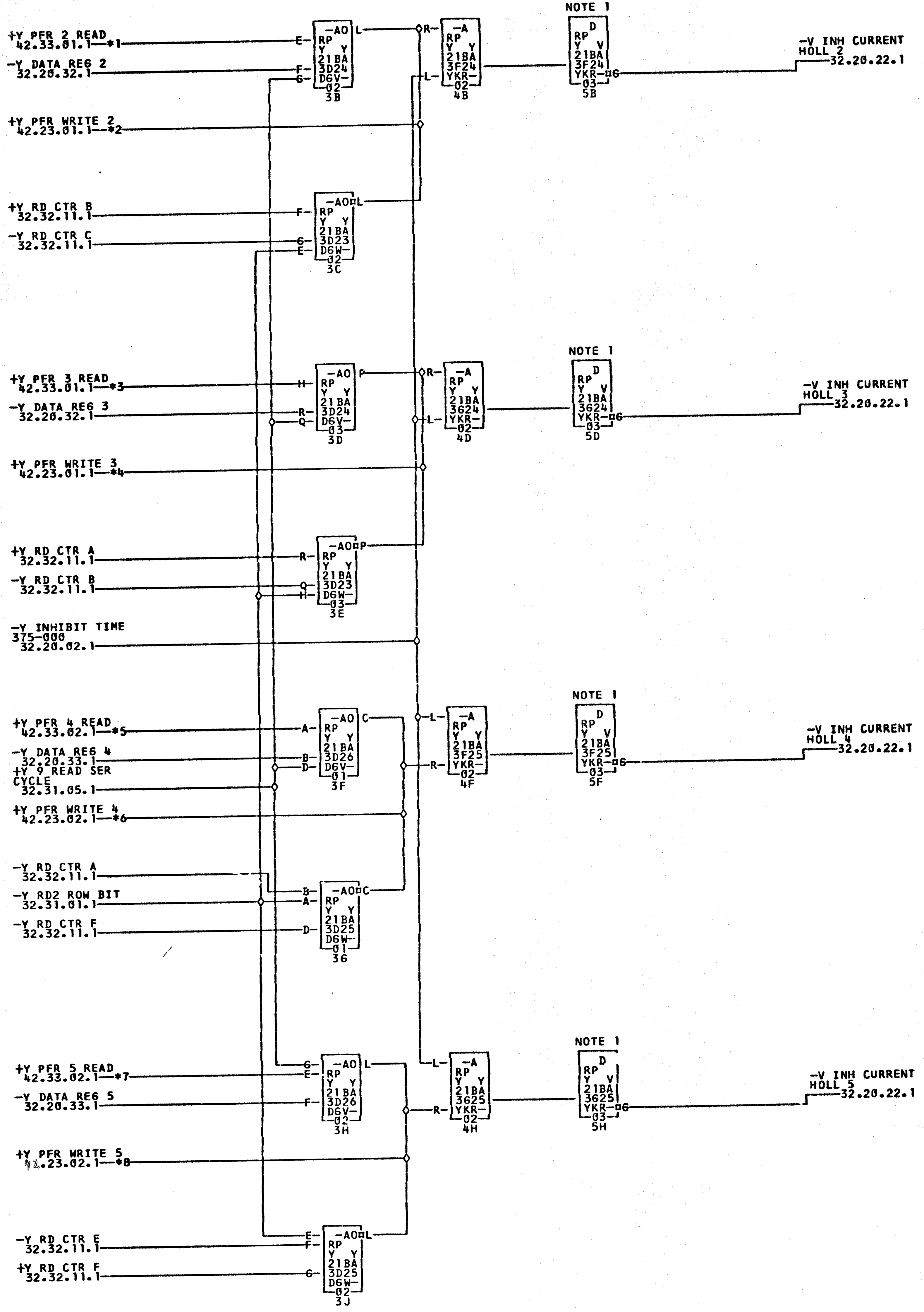

+Y PFR 2 READ 42.33.01.1—*1
-Y DATA REG 2 32.20.32.1
+Y PFR WRITE 2 42.23.01.1—*2
+Y RD CTR B 32.32.11.1
-Y RD CTR C 32.32.11.1
+Y PFR 3 READ 42.33.01.1—*3
-Y DATA REG 3 32.20.32.1
+Y PFR WRITE 3 42.23.01.1—*4
+Y RD CTR A 32.32.11.1
-Y RD CTR B 32.32.11.1
-Y INHIBIT TIME 375-000 32.20.02.1
+Y PFR 4 READ 42.33.02.1—*5
-Y DATA REG 4 32.20.33.1
+Y 9 READ SER CYCLE 32.31.05.1
+Y PFR WRITE 4 42.23.02.1—*6
-Y RD CTR A 32.32.11.1
-Y RD2 ROW BIT 32.31.01.1
-Y RD CTR F 32.32.11.1
+Y PFR 5 READ 42.33.02.1—*7
-Y DATA REG 5 32.20.33.1
+Y PFR WRITE 5 42.23.02.1—*8
-Y RD CTR E 32.32.11.1
+Y RD CTR F 32.32.11.1
-AO RP Y Y 21BA 3D24 D6V- 02 3B
-AO RP Y Y 21BA 3D23 D6W- 02 3C
-AO RP Y Y 21BA 3D24 D6V- 03 3D
-AO RP Y Y 21BA 3D23 D6W- 03 3E
-AO RP Y Y 21BA 3D26 D6V- 01 3F
-AO RP Y Y 21BA 3D25 D6W- 01 3G
-AO RP Y Y 21BA 3D26 D6V- 02 3H
-AO RP Y Y 21BA 3D25 D6W- 02 3J
-A RP Y Y 21BA 3F24 YKR- 02 4B
-A RP Y Y 21BA 3G24 YKR- 02 4D
-A RP Y Y 21BA 3F25 YKR- 02 4F
-A RP Y Y 21BA 3G25 YKR- 02 4H
NOTE 1
D RP Y V 21BA 3F24 YKR- 03 5B
D RP Y V 21BA 3G24 YKR- 03 5D
D RP Y V 21BA 3F25 YKR- 03 5F
D RP Y V 21BA 3G25 YKR- 03 5H
-V INH CURRENT HOLL 2 32.20.22.1
-V INH CURRENT HOLL 3 32.20.22.1
-V INH CURRENT HOLL 4 32.20.22.1
-V INH CURRENT HOLL 5 32.20.22.1

*1—21B3E32E
*7—21B3E32H

*2—21B3D32E
*8—21B3D32H

*3—21B3E32F

*4—21B3D32F

*5—21B3E326

*6—21B3D326

COMMENTS

NOTE 1—INHIBIT CURRENT 228MA MIN, 262MA MAX, 250MA NOMINAL. MDM.4041-4441

TAG	DATE	E.C.NO.	TAG	DATE	E.C.NO.	TAG	DATE	E.C.NO.	TAG	DATE	E.C.NO.
A	09-01-64	121550L	B	03-18-65	121598	C	03-10-67	125658			

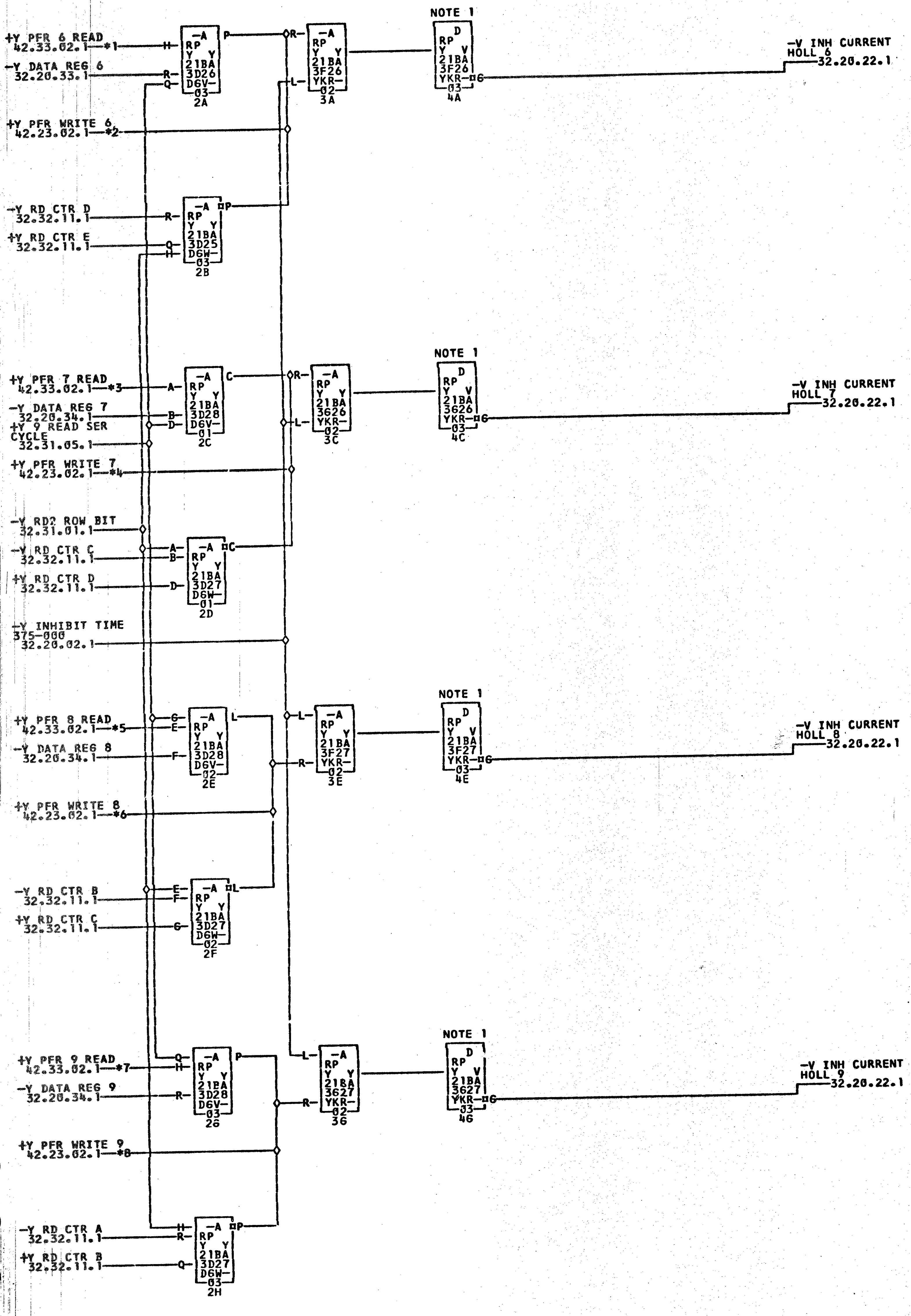

+Y PFR 6 READ 42.33.02.1 *1
-Y DATA REG 6 32.20.33.1
+Y PFR WRITE 6 42.23.02.1 *2
-Y RD CTR D 32.32.11.1
+Y RD CTR E 32.32.11.1
+Y PFR 7 READ 42.33.02.1 *3
-Y DATA REG 7 32.20.34.1
+Y 9 READ SER CYCLE 32.31.05.1
+Y PFR WRITE 7 42.23.02.1 *4
-Y RD2 ROW BIT 32.31.01.1
-Y RD CTR C 32.32.11.1
+Y RD CTR D 32.32.11.1
+Y INHIBIT TIME 375-000 32.20.02.1
+Y PFR 8 READ 42.33.02.1 *5
-Y DATA REG 8 32.20.34.1
+Y PFR WRITE 8 42.23.02.1 *6
-Y RD CTR B 32.32.11.1
+Y RD CTR C 32.32.11.1
+Y PFR 9 READ 42.33.02.1 *7
-Y DATA REG 9 32.20.34.1
+Y PFR WRITE 9 42.23.02.1 *8
-Y RD CTR A 32.32.11.1
+Y RD CTR B 32.32.11.1
-A RP Y Y 21BA 3D26 D6V 03 2A
-A RP Y Y 21BA 3D25 D6W 03 2B
-A RP Y Y 21BA 3D28 D6V 01 2C
-A RP Y Y 21BA 3D27 D6W 01 2D
-A RP Y Y 21BA 3D28 D6V 02 2E
-A RP Y Y 21BA 3D27 D6W 02 2F
-A RP Y Y 21BA 3D28 D6V 03 2G
-A RP Y Y 21BA 3D27 D6W 03 2H
-A RP Y Y 21BA 3F26 YKR 02 3A
-A RP Y Y 21BA 3G26 YKR 02 3C
-A RP Y Y 21BA 3F27 YKR 02 3E
-A RP Y Y 21BA 3G27 YKR 02 3G
NOTE 1
D RP Y V 21BA 3F26 YKR 03 4A
D RP Y V 21BA 3G26 YKR 03 4C
D RP Y V 21BA 3F27 YKR 03 4E
D RP Y V 21BA 3G27 YKR 03 4G
-V INH CURRENT HOLL 6 32.20.22.1
-V INH CURRENT HOLL 7 32.20.22.1
-V INH CURRENT HOLL 8 32.20.22.1
-V INH CURRENT HOLL 9 32.20.22.1

*1—21B3E32K *2—21B3D32K *3—21B3E32L *4—21B3D32L *5—21B3E32M *6—21B3D32M

*7—21B3E32N *8—21B3D32N

COMMENTS

NOTE 1—INHIBIT CURRENT 228MA MIN, 262MA MAX, 250MA NOMINAL. MDM.4041-4441

TAG	DATE	E.C.NO.	TAG	DATE	E.C.NO.	TAG	DATE	E.C.NO.	TAG	DATE	E.C.NO.
A	09-01-64	121550L	B	03-18-65	121598	C	03-10-67	125658			

2-1

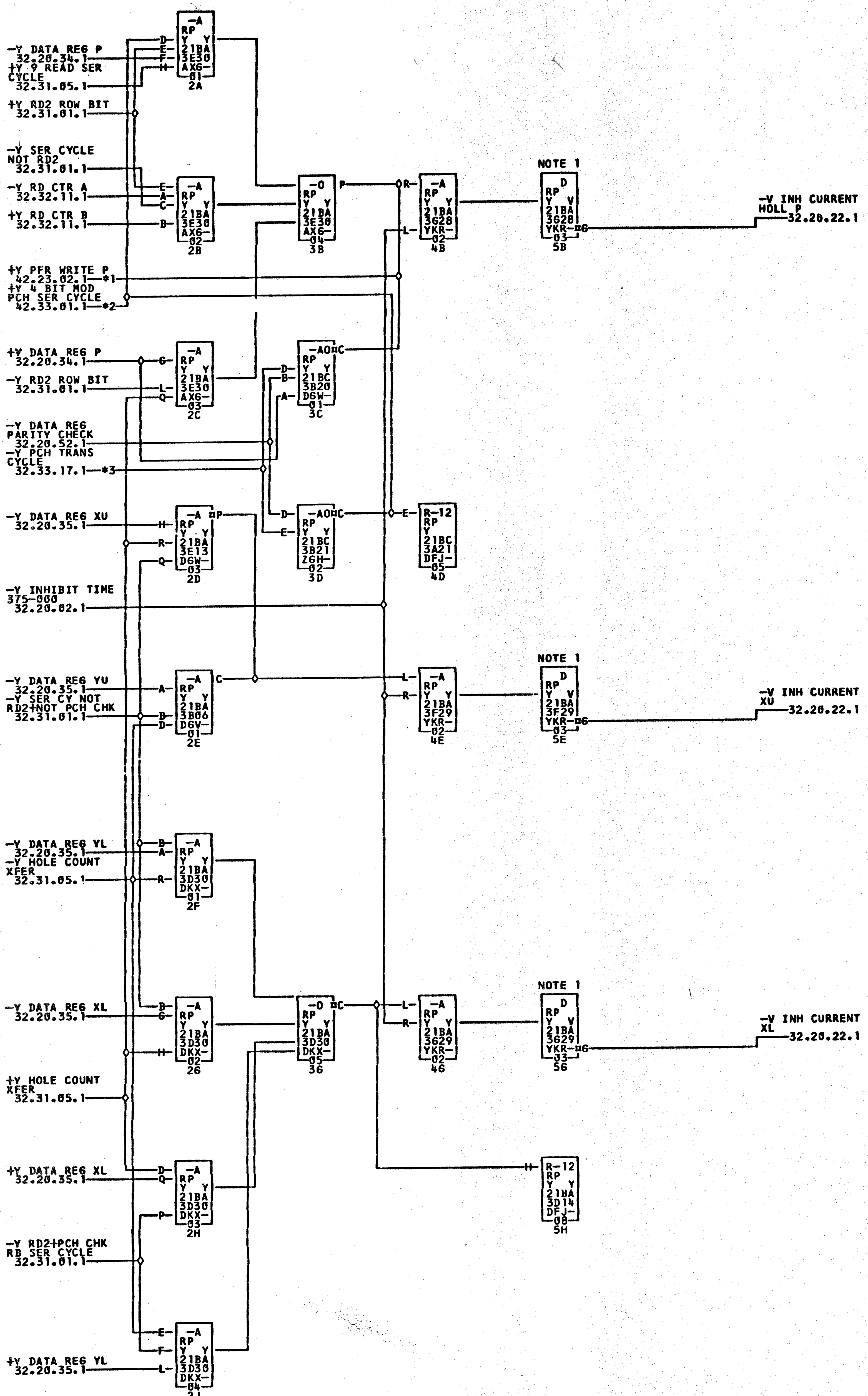
-Y DATA REG P 32.20.34.1
+Y 9 READ SER CYCLE 32.31.05.1
+Y RD2 ROW BIT 32.31.01.1
-Y SER CYCLE NOT RD2 32.31.01.1
-Y RD CTR A 32.32.11.1
+Y RD CTR B 32.32.11.1
+Y PFR WRITE P 42.23.02.1 *1
+Y 4 BIT MOD PCH SER CYCLE 42.33.01.1 *2
+Y DATA REG P 32.20.34.1
-Y RD2 ROW BIT 32.31.01.1
-Y DATA REG PARITY CHECK 32.20.52.1
-Y PCH TRANS CYCLE 32.33.17.1 *3
-Y DATA REG XU 32.20.35.1
-Y INHIBIT TIME 375-000 32.20.02.1
-Y DATA REG YU 32.20.35.1
-Y SER CY NOT RD2+NOT PCH CHK 32.31.01.1
-Y DATA REG YL 32.20.35.1
-Y HOLE COUNT XFER 32.31.05.1
-Y DATA REG XL 32.20.35.1
+Y HOLE COUNT XFER 32.31.05.1
+Y DATA REG XL 32.20.35.1
-Y RD2+PCH CHK RB SER CYCLE 32.31.01.1
+Y DATA REG YL 32.20.35.1
-A RP Y Y 21BA 3E30 AX6- 01 2A
-A RP Y Y 21BA 3E30 AX6- 02 2B
-A RP Y Y 21BA 3E30 AX6- 03 2C
-A RP Y Y 21BA 3E13 D6W- 03 2D
-A RP Y Y 21BA 3B06 D6V- 01 2E
-A RP Y Y 21BA 3D30 DKX- 01 2F
-A RP Y Y 21BA 3D30 DKX- 02 2G
-A RP Y Y 21BA 3D30 DKX- 03 2H
-A RP Y Y 21BA 3D30 DKX- 04 2J
-O RP Y Y 21BA 3E30 AX6- 04 3B
-AO RP Y Y 21BC 3B20 D6W- 01 3C
-AO RP Y Y 21BC 3B21 Z6H- 02 3D
-O RP Y Y 21BA 3D30 DKX- 05 3G
-A RP Y Y 21BA 3628 YKR- 02 4B
R-12 RP Y 21BC 3A21 DFJ- 05 4D
-A RP Y Y 21BA 3F29 YKR- 02 4E
-A RP Y Y 21BA 3629 YKR- 02 4G
NOTE 1
D RP Y V 21BA 3628 YKR- 03 5B
NOTE 1
D RP Y V 21BA 3F29 YKR- 03 5E
NOTE 1
D RP Y V 21BA 3629 YKR- 03 5G
R-12 RP Y Y 21BA 3D14 DFJ- 08 5H
-V INH CURRENT HOLL P 32.20.22.1
-V INH CURRENT XU 32.20.22.1
-V INH CURRENT XL 32.20.22.1

*1—21B3A31F *2—21B3E32R *3—21B3T01D

COMMENTS

NOTE 1—INHIBIT CURRENT 228MA MIN, 262MA MAX, 250MA NOMINAL.
MDM.4041-4441-5021-5421

TAG	DATE	E.C.NO.	TAG	DATE	E.C.NO.	TAG	DATE	E.C.NO.	TAG	DATE	E.C.NO.
A	09-01-64	121550L	B	10-15-64	121567	C	12-19-64	121583	D	03-18-65	121598
E	03-10-67	125658									

2-1

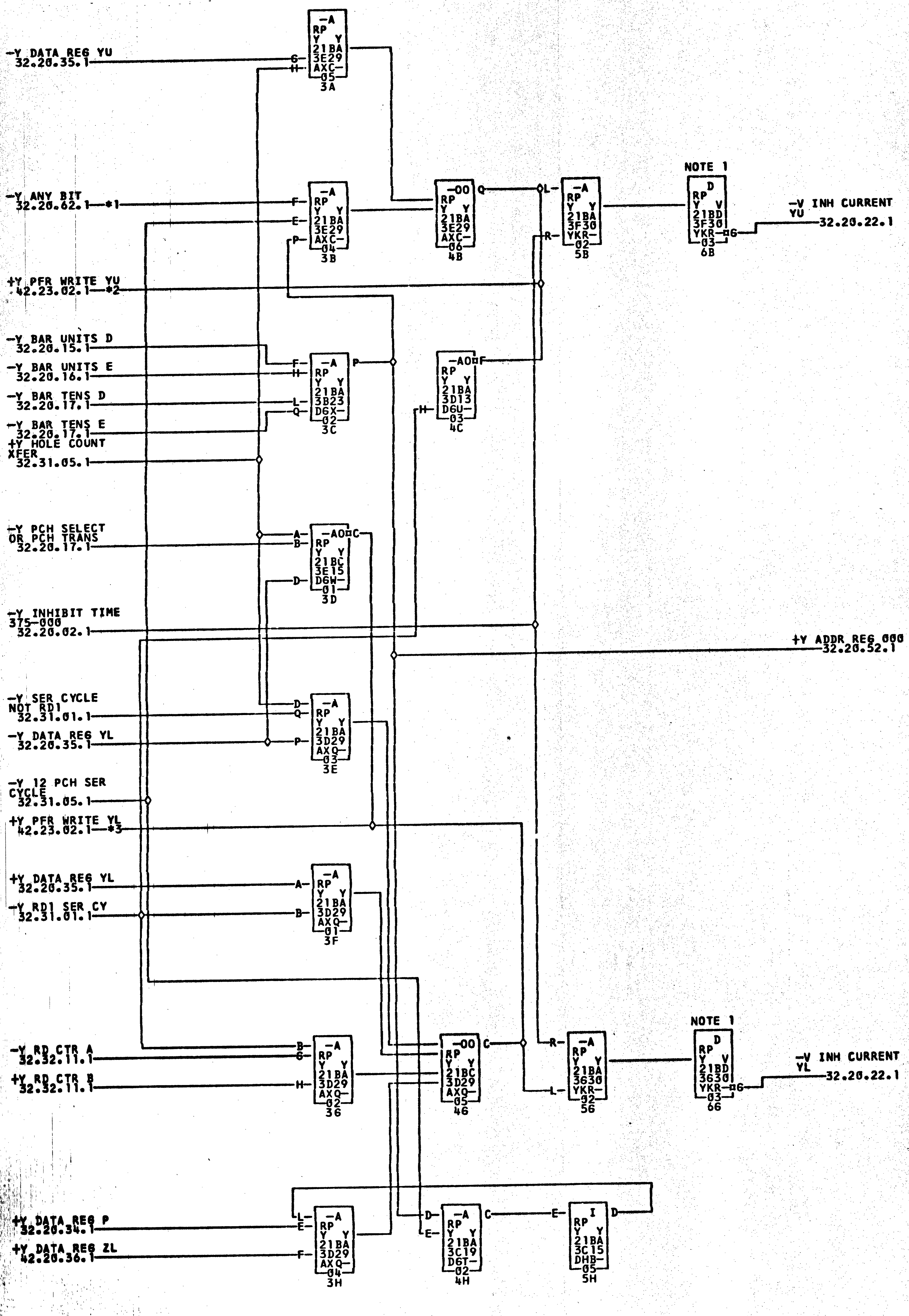
-Y DATA REG YU 32.20.35.1
-Y ANY BIT 32.20.62.1 *1
+Y PFR WRITE YU 42.23.02.1 *2
-Y BAR UNITS D 32.20.15.1
-Y BAR UNITS E 32.20.16.1
-Y BAR TENS D 32.20.17.1
-Y BAR TENS E 32.20.17.1
+Y HOLE COUNT XFER 32.31.05.1
-Y PCH SELECT OR PCH TRANS 32.20.17.1
-Y INHIBIT TIME 375-000 32.20.02.1
-Y SER CYCLE NOT RD1 32.31.01.1
-Y DATA REG YL 32.20.35.1
-Y 12 PCH SER CYCLE 32.31.05.1
+Y PFR WRITE YL 42.23.02.1 *3
+Y DATA REG YL 32.20.35.1
-Y RD1 SER CY 32.31.01.1
-Y RD CTR A 32.32.11.1
+Y RD CTR B 32.32.11.1
+Y DATA REG P 32.20.34.1
+Y DATA REG ZL 42.20.36.1
+Y ADDR REG 000 32.20.52.1
NOTE 1
-V INH CURRENT YU 32.20.22.1
NOTE 1
-V INH CURRENT YL 32.20.22.1
-A RP Y Y 21BA 3E29 AXC 05 3A
-A RP Y Y 21BA 3E29 AXC 04 3B
-OO RP Y Y 21BA 3E29 AXC 06 4B
-A RP Y Y 21BA 3F30 YKR 02 5B
D RP Y V 21BD 3F30 YKR 03 6B
-A RP Y Y 21BA 3B23 D6X 02 3C
-AO RP Y Y 21BA 3D13 D6U 03 4C
-AO RP Y Y 21BC 3E15 D6W 01 3D
-A RP Y Y 21BA 3D29 AXQ 03 3E
-A RP Y Y 21BA 3D29 AXQ 01 3F
-A RP Y Y 21BA 3D29 AXQ 02 3G
-OO RP Y Y 21BC 3D29 AXQ 05 4G
-A RP Y Y 21BA 3G30 YKR 02 5G
D RP Y V 21BD 3G30 YKR 03 6G
-A RP Y Y 21BA 3D29 AXQ 04 3H
-A RP Y Y 21BA 3C19 D6T 02 4H
I RP Y Y 21BA 3C15 DHB 05 5H

*1—21B3C32P *2—21B3D32Q *3—21B3D32P

COMMENTS
NOTE 1—INHIBIT CURRENT 228MA MIN,
262MA MAX, 250MA NOMINAL.
MDM.5021-5421

TAG	DATE	E.C.NO.	TAG	DATE	E.C.NO.	TAG	DATE	E.C.NO.	TAG	DATE	E.C.NO.
A	09-01-64	121550L	B	10-15-64	121567	C	04-26-65	124237	D	03-10-67	125658

2-1

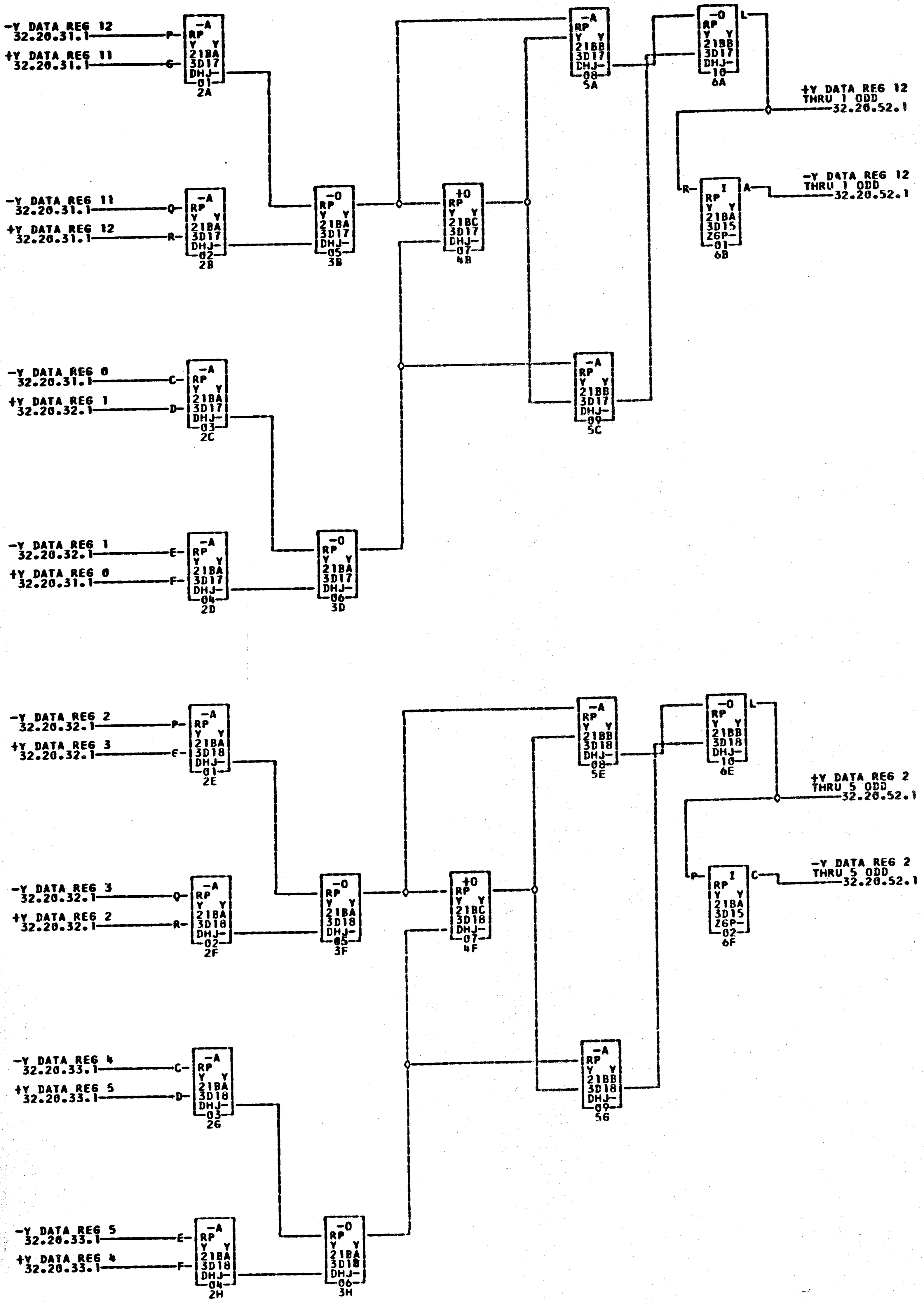

-Y DATA REG 12 32.20.31.1
+Y DATA REG 11 32.20.31.1
-A RP Y Y 21BA 3D17 DHJ-01 2A
-Y DATA REG 11 32.20.31.1
+Y DATA REG 12 32.20.31.1
-A RP Y Y 21BA 3D17 DHJ-02 2B
-O RP Y Y 21BA 3D17 DHJ-05 3B
+O RP Y Y 21BC 3D17 DHJ-07 4B
-A RP Y Y 21BB 3D17 DHJ-08 5A
-O RP Y Y 21BB 3D17 DHJ-10 6A
+Y DATA REG 12 THRU 1 ODD 32.20.52.1
I RP Y Y 21BA 3D15 Z6P-01 6B
-Y DATA REG 12 THRU 1 ODD 32.20.52.1
-Y DATA REG 0 32.20.31.1
+Y DATA REG 1 32.20.32.1
-A RP Y Y 21BA 3D17 DHJ-03 2C
-A RP Y Y 21BB 3D17 DHJ-09 5C
-Y DATA REG 1 32.20.32.1
+Y DATA REG 0 32.20.31.1
-A RP Y Y 21BA 3D17 DHJ-04 2D
-O RP Y Y 21BA 3D17 DHJ-06 3D
-Y DATA REG 2 32.20.32.1
+Y DATA REG 3 32.20.32.1
-A RP Y Y 21BA 3D18 DHJ-01 2E
-A RP Y Y 21BB 3D18 DHJ-08 5E
-O RP Y Y 21BB 3D18 DHJ-10 6E
+Y DATA REG 2 THRU 5 ODD 32.20.52.1
-Y DATA REG 3 32.20.32.1
+Y DATA REG 2 32.20.32.1
-A RP Y Y 21BA 3D18 DHJ-02 2F
-O RP Y Y 21BA 3D18 DHJ-05 3F
+O RP Y Y 21BC 3D18 DHJ-07 4F
I RP Y Y 21BA 3D15 Z6P-02 6F
-Y DATA REG 2 THRU 5 ODD 32.20.52.1
-Y DATA REG 4 32.20.33.1
+Y DATA REG 5 32.20.33.1
-A RP Y Y 21BA 3D18 DHJ-03 2G
-A RP Y Y 21BB 3D18 DHJ-09 5G
-Y DATA REG 5 32.20.33.1
+Y DATA REG 4 32.20.33.1
-A RP Y Y 21BA 3D18 DHJ-04 2H
-O RP Y Y 21BA 3D18 DHJ-06 3H

COMMENTS

TAG	DATE	E.C.NO.	TAG	DATE	E.C.NO.	TAG	DATE	E.C.NO.	TAG	DATE	E.C.NO.
A	09-01-64	121550L	B	12-19-64	121583	C	11-19-65	125601			

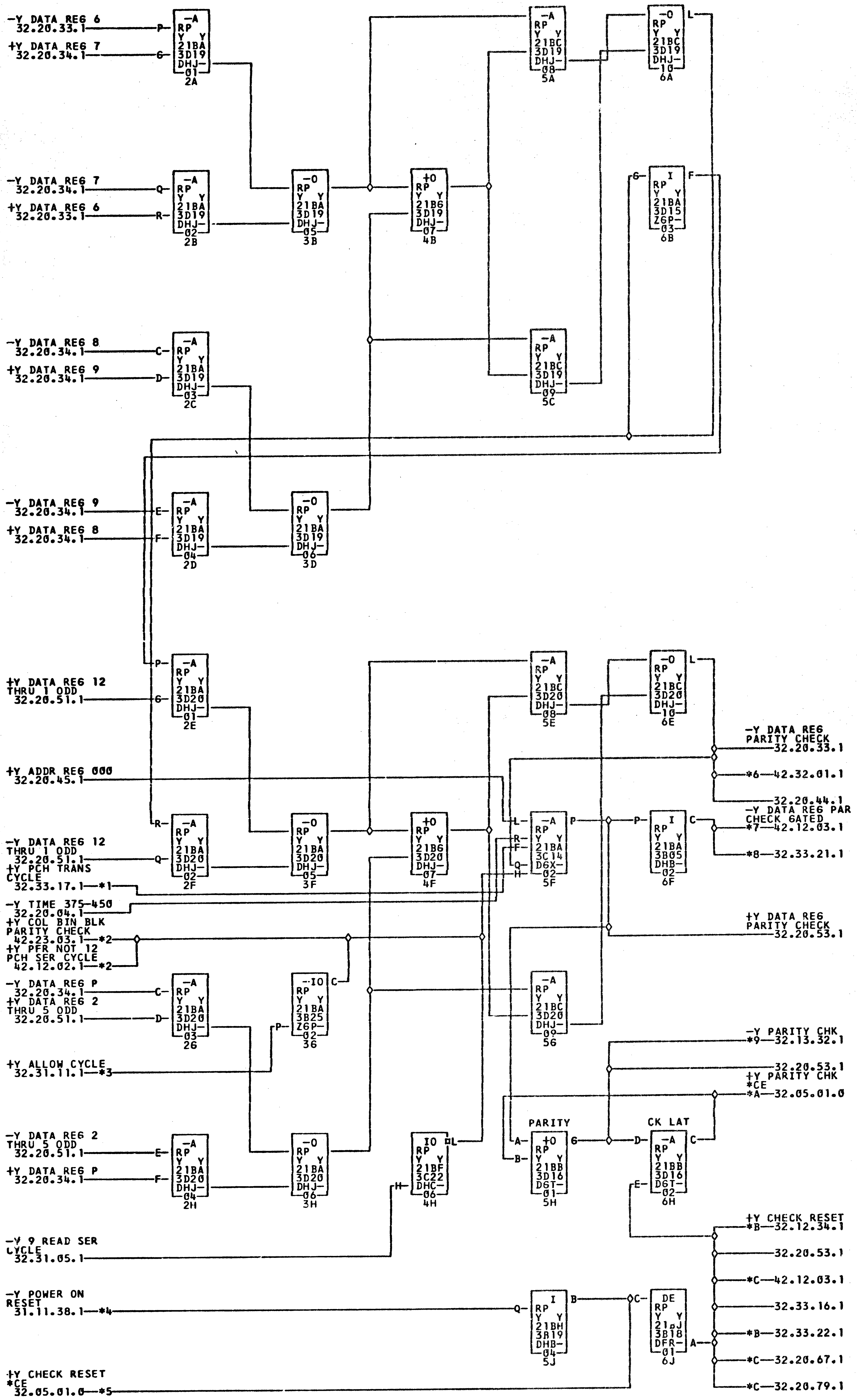
-Y DATA REG 6 32.20.33.1
+Y DATA REG 7 32.20.34.1
-Y DATA REG 7 32.20.34.1
+Y DATA REG 6 32.20.33.1
-Y DATA REG 8 32.20.34.1
+Y DATA REG 9 32.20.34.1
-Y DATA REG 9 32.20.34.1
+Y DATA REG 8 32.20.34.1
+Y DATA REG 12 THRU 1 ODD 32.20.51.1
+Y ADDR REG 000 32.20.45.1
-Y DATA REG 12 THRU 1 ODD 32.20.51.1
+Y PCH TRANS CYCLE 32.33.17.1—*1
-Y TIME 375-450 32.20.04.1
+Y COL BIN BLK PARITY CHECK 42.23.03.1—*2
+Y PFR NOT 12 PCH SER CYCLE 42.12.02.1—*2
-Y DATA REG P 32.20.34.1
+Y DATA REG 2 THRU 5 ODD 32.20.51.1
+Y ALLOW CYCLE 32.31.11.1—*3
-Y DATA REG 2 THRU 5 ODD 32.20.51.1
+Y DATA REG P 32.20.34.1
-Y 9 READ SER CYCLE 32.31.05.1
-Y POWER ON RESET 31.11.38.1—*4
+Y CHECK RESET *CE 32.05.01.0—*5
-A RP 21BA 3D19 DHJ-01 2A
-A RP 21BA 3D19 DHJ-02 2B
-A RP 21BA 3D19 DHJ-03 2C
-A RP 21BA 3D19 DHJ-04 2D
-O RP 21BA 3D19 DHJ-05 3B
-O RP 21BA 3D19 DHJ-06 3D
+O RP 21BG 3D19 DHJ-07 4B
-A RP 21BC 3D19 DHJ-08 5A
-A RP 21BC 3D19 DHJ-09 5C
-O RP 21BC 3D19 DHJ-10 6A
I RP 21BA 3D15 Z6P-03 6B
-A RP 21BA 3D20 DHJ-01 2E
-A RP 21BA 3D20 DHJ-02 2F
-A RP 21BA 3D20 DHJ-03 2G
-A RP 21BA 3D20 DHJ-04 2H
-O RP 21BA 3D20 DHJ-05 3F
-IO RP 21BA 3B25 Z6P-02 3G
-O RP 21BA 3D20 DHJ-06 3H
+O RP 21BG 3D20 DHJ-07 4F
IO RP 21BF 3C22 DHC-06 4H
-A RP 21BC 3D20 DHJ-08 5E
-A RP 21BA 3C14 D6X-02 5F
-A RP 21BC 3D20 DHJ-09 5G
PARITY +O RP 21BB 3D16 D6T-01 5H
I RP 21BH 3B19 DHB-04 5J
-O RP 21BC 3D20 DHJ-10 6E
I RP 21BA 3B05 DHB-02 6F
CK LAT -A RP 21BB 3D16 D6T-02 6H
DE RP 21oJ 3B18 DFR-01 6J
-Y DATA REG PARITY CHECK 32.20.33.1
*6—42.32.01.1
32.20.44.1
-Y DATA REG PAR CHECK GATED *7—42.12.03.1
*8—32.33.21.1
+Y DATA REG PARITY CHECK 32.20.53.1
-Y PARITY CHK *9—32.13.32.1
32.20.53.1
+Y PARITY CHK *CE *A—32.05.01.0
+Y CHECK RESET *B—32.12.34.1
32.20.53.1
*C—42.12.03.1
32.33.16.1
*B—32.33.22.1
*C—32.20.67.1
*C—32.20.79.1

*1—21B3A01D
—21B4B02Q
—21B1T28D
—21B4A02M

*2—21B3F32B
*7—21B3632D
*A—21B3C03K

*3—21B3T15A
—21B4E02D
—CERPA060

*4—21B3T26C
*8—21B3T08B
*B—21B3T24C

*5—21B3C03L
—21B1T08B
—21B1T24C

*6—21B3B31Q
*9—21B3T28D
*C—21B3A31M

COMMENTS

TAG	DATE	E.C.NO.
A	09-01-64	121550L
E	02-15-65	121594
J	03-10-67	125658
B	10-15-64	121567
F	03-18-65	121598
C	11-10-64	121572
G	04-26-65	124237
D	12-19-64	121583
H	04-28-66	125637

0826679 READ BAR+PARITY CHK READ CHK 2821 32.20.53.1

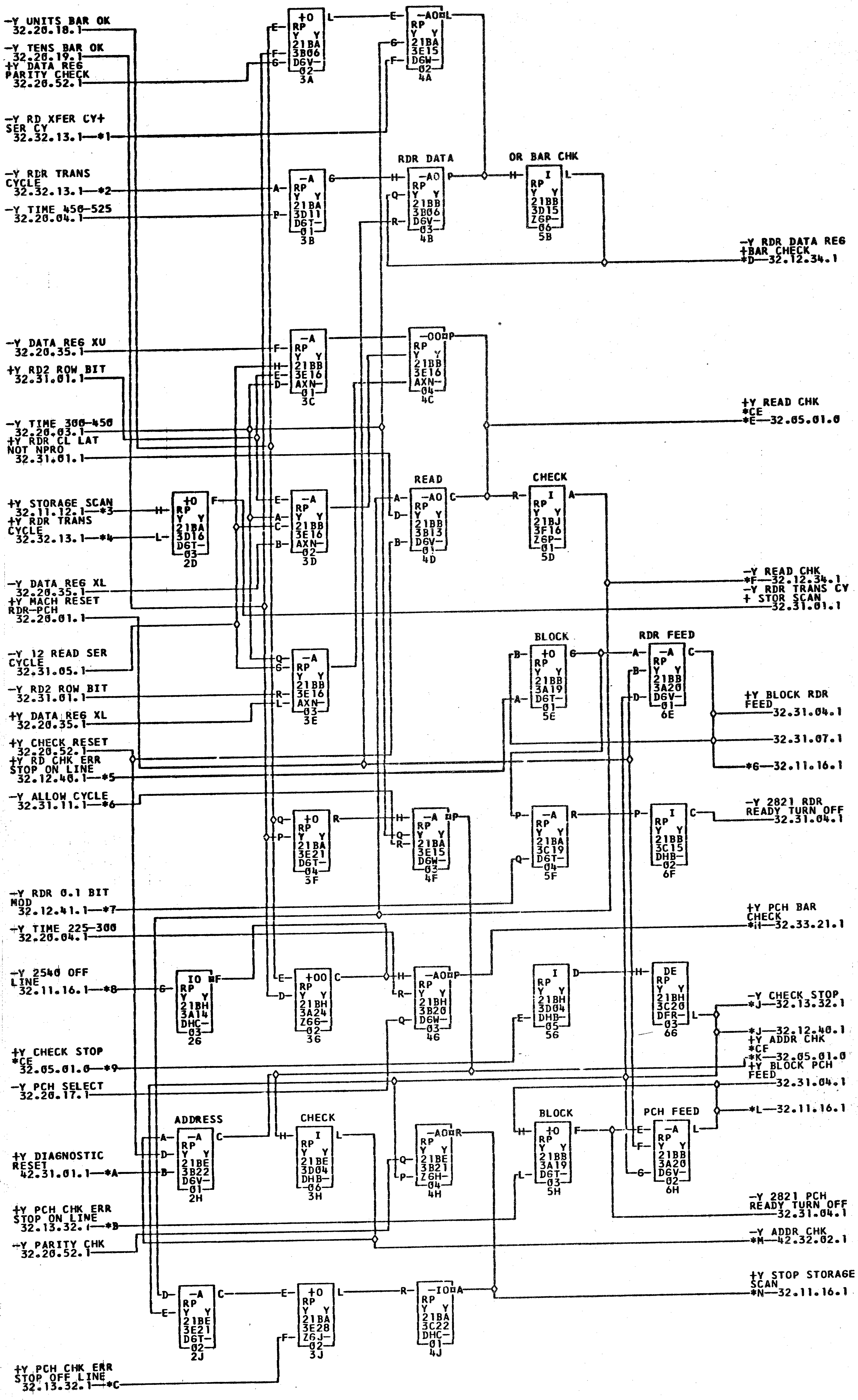
-Y UNITS BAR OK 32.20.18.1
-Y TENS BAR OK 32.20.19.1
+Y DATA REG PARITY CHECK 32.20.52.1
-Y RD XFER CY+ SER CY 32.32.13.1—*1
-Y RDR TRANS CYCLE 32.32.13.1—*2
-Y TIME 450-525 32.20.04.1
-Y DATA REG XU 32.20.35.1
+Y RD2 ROW BIT 32.31.01.1
-Y TIME 300-450 32.20.03.1
+Y RDR CL LAT NOT NPRO 32.31.01.1
+Y STORAGE SCAN 32.11.12.1—*3
+Y RDR TRANS CYCLE 32.32.13.1—*4
-Y DATA REG XL 32.20.35.1
+Y MACH RESET RDR-PCH 32.20.01.1
-Y 12 READ SER CYCLE 32.31.05.1
-Y RD2 ROW BIT 32.31.01.1
+Y DATA REG XL 32.20.35.1
+Y CHECK RESET 32.20.52.1
+Y RD CHK ERR STOP ON LINE 32.12.40.1—*5
-Y ALLOW CYCLE 32.31.11.1—*6
-Y RDR 0.1 BIT MOD 32.12.41.1—*7
-Y TIME 225-300 32.20.04.1
-Y 2540 OFF LINE 32.11.16.1—*8
+Y CHECK STOP *CE 32.05.01.0—*9
-Y PCH SELECT 32.20.17.1
+Y DIAGNOSTIC RESET 42.31.01.1—*A
+Y PCH CHK ERR STOP ON LINE 32.13.32.1—*B
-Y PARITY CHK 32.20.52.1
+Y PCH CHK ERR STOP OFF LINE 32.13.32.1—*C
RDR DATA
OR BAR CHK
READ
CHECK
BLOCK
RDR FEED
ADDRESS
CHECK
BLOCK
PCH FEED
3A
4A
3B
4B
5B
3C
4C
2D
3D
4D
5D
3E
5E
6E
3F
4F
5F
6F
26
36
46
56
66
2H
3H
4H
5H
6H
2J
3J
4J
-Y RDR DATA REG +BAR CHECK *D—32.12.34.1
+Y READ CHK *CE *E—32.05.01.0
-Y READ CHK *F—32.12.34.1
-Y RDR TRANS CY + STOR SCAN 32.31.01.1
+Y BLOCK RDR FEED 32.31.04.1
32.31.07.1
*6—32.11.16.1
-Y 2821 RDR READY TURN OFF 32.31.04.1
+Y PCH BAR CHECK *H—32.33.21.1
-Y CHECK STOP *J—32.13.32.1
*J—32.12.40.1
+Y ADDR CHK *CF *K—32.05.01.0
+Y BLOCK PCH FEED 32.31.04.1
*L—32.11.16.1
-Y 2821 PCH READY TURN OFF 32.31.04.1
-Y ADDR CHK *M—42.32.02.1
+Y STOP STORAGE SCAN *N—32.11.16.1

*1—21B3T19C
*6—21B3T17B
—21B1T28B
*F—21B3T32C
*K—21B3D01M
—21B1T28C

*2—21B3T20D
*7—21B3T31C
*C—21B3A01C
—21B1T32C
—CERPA059

*3—21B3T25A
*8—21B3T23A
*D—21B3T04B
*6—21B3T31D
*L—21B3T32A

*4—21B3T03A
*9—21B3D01L
—21B1T04B
*H—21B3A01Q
*M—21B3F32M

*5—21B3T28A
*A—21B3F32N
*E—21B3C03N
*J—21B3T25C
—21B4F01M

—21B1T28A
*B—21B3T28B
—CERPA015
—21B1T25C
*N—21B3T28C

COMMENTS
MDM. 3040-3060-4020-5021

TAG	DATE	E.C.NO.	TAG	DATE	E.C.NO.	TAG	DATE	E.C.NO.	TAG	DATE	E.C.NO.
A	09-01-64	121550L	B	10-15-64	121567	C	11-10-64	121572	D	12-19-64	121583
E	02-15-65	121594	F	03-18-65	121598	6	11-19-65	125601	H	06-23-66	125647
J	03-10-67	125658									

E-1

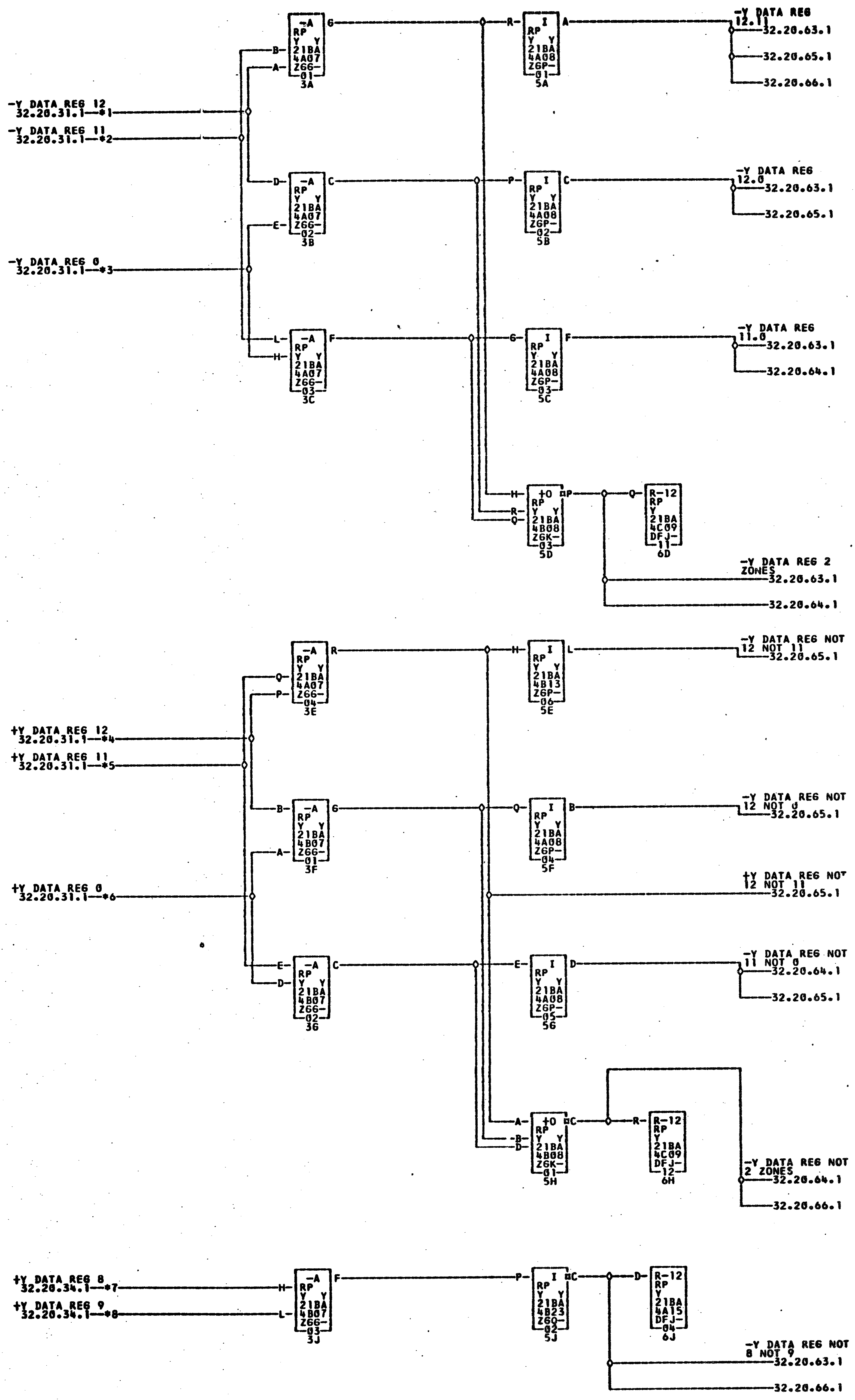
-Y DATA REG 12
32.20.31.1—*1
-Y DATA REG 11
32.20.31.1—*2
-Y DATA REG 0
32.20.31.1—*3
-A RP Y Y 21BA 4A07 Z66- 01 3A
-A RP Y Y 21BA 4A07 Z66- 02 3B
-A RP Y Y 21BA 4A07 Z66- 03 3C
I RP Y Y 21BA 4A08 ZGP- 01 5A
I RP Y Y 21BA 4A08 ZGP- 02 5B
I RP Y Y 21BA 4A08 ZGP- 03 5C
+O RP Y Y 21BA 4B08 Z6K- 03 5D
R-12 RP Y 21BA 4C09 DFJ- 11 6D
-Y DATA REG 12.11
32.20.63.1
32.20.65.1
32.20.66.1
-Y DATA REG 12.0
32.20.63.1
32.20.65.1
-Y DATA REG 11.0
32.20.63.1
32.20.64.1
-Y DATA REG 2 ZONES
32.20.63.1
32.20.64.1
+Y DATA REG 12
32.20.31.1—*4
+Y DATA REG 11
32.20.31.1—*5
+Y DATA REG 0
32.20.31.1—*6
-A RP Y Y 21BA 4A07 Z66- 04 3E
-A RP Y Y 21BA 4B07 Z66- 01 3F
-A RP Y Y 21BA 4B07 Z66- 02 3G
I RP Y Y 21BA 4B13 ZGP- 06 5E
I RP Y Y 21BA 4A08 ZGP- 04 5F
I RP Y Y 21BA 4A08 ZGP- 05 5G
+O RP Y Y 21BA 4B08 Z6K- 01 5H
R-12 RP Y 21BA 4C09 DFJ- 12 6H
-Y DATA REG NOT 12 NOT 11
32.20.65.1
-Y DATA REG NOT 12 NOT 0
32.20.65.1
+Y DATA REG NOT 12 NOT 11
32.20.65.1
-Y DATA REG NOT 11 NOT 0
32.20.64.1
32.20.65.1
-Y DATA REG NOT 2 ZONES
32.20.64.1
32.20.66.1
+Y DATA REG 8
32.20.34.1—*7
+Y DATA REG 9
32.20.34.1—*8
-A RP Y Y 21BA 4B07 Z66- 03 3J
I RP Y Y 21BA 4B23 Z6Q- 02 5J
R-12 RP Y 21BA 4A15 DFJ- 04 6J
-Y DATA REG NOT 8 NOT 9
32.20.63.1
32.20.66.1

*1—21B4F02D *2—21B4F02E *3—21B4F02F *4—21B4E026 *5—21B4E02H *6—21B4E02K
*7—21B4F02B *8—21B4F02C

COMMENTS

TAG	DATE	E.C.NO.	TAG	DATE	E.C.NO.	TAG	DATE	E.C.NO.	TAG	DATE	E.C.NO.
A	09-02-64	121550M	B	10-16-64	121567						

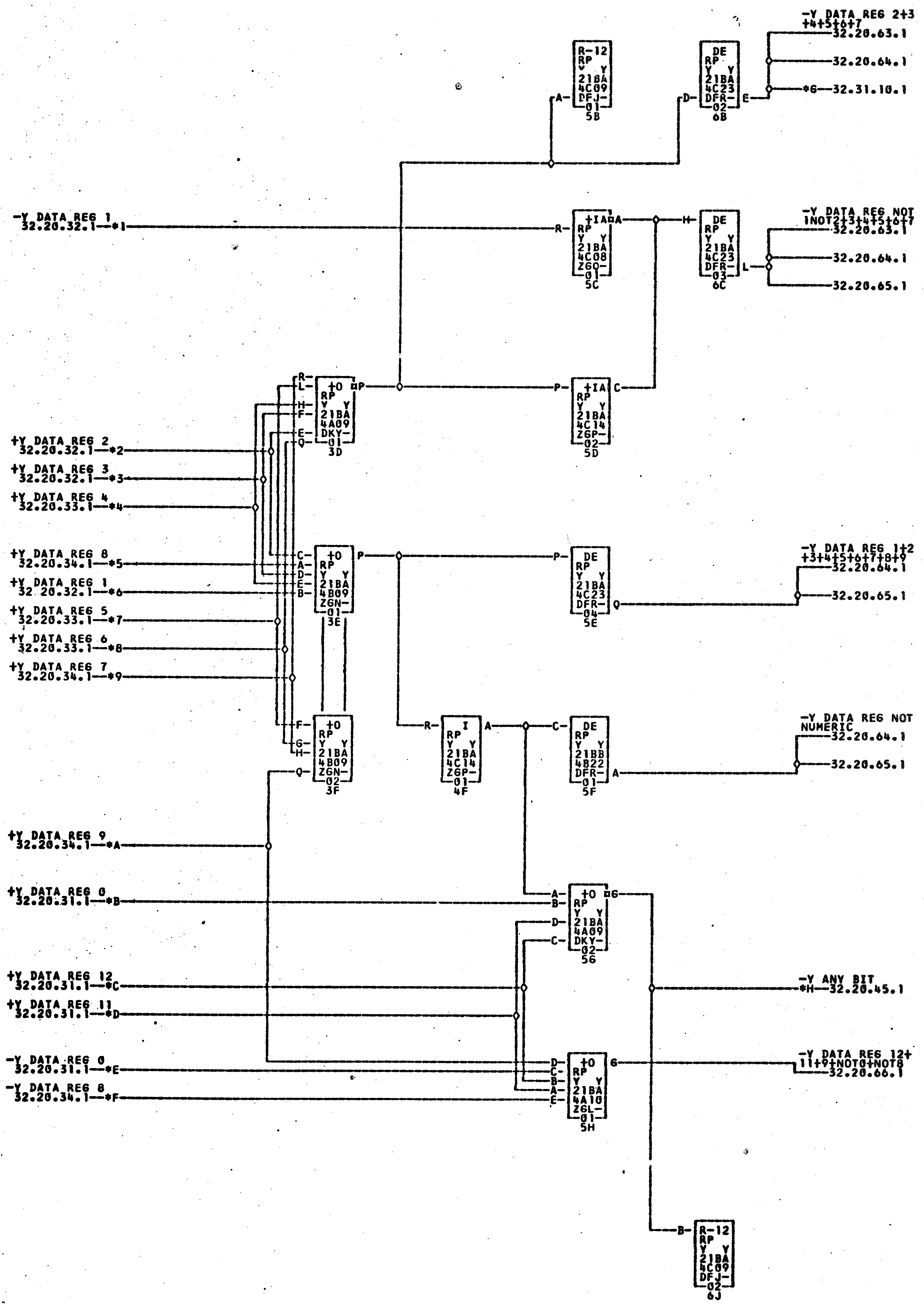
R-12 RP Y Y 21BA 4C09 DFJ- 01 5B
A
DE RP Y Y 21BA 4C23 DFR- 02 6B
D
E
-Y DATA REG 2+3 +4+5+6+7
32.20.63.1
32.20.64.1
*6—32.31.10.1
-Y DATA REG 1
32.20.32.1—*1
R
+IA RP Y Y 21BA 4C08 Z6Q- 01 5C
A
H
DE RP Y Y 21BA 4C23 DFR- 03 6C
L
-Y DATA REG NOT 1NOT2+3+4+5+6+7
32.20.63.1
32.20.64.1
32.20.65.1
R L H F E Q
+0 RP Y Y 21BA 4A09 DKY- 01 3D
P
P
+IA RP Y Y 21BA 4C14 Z6P- 02 5D
C
+Y DATA REG 2
32.20.32.1—*2
+Y DATA REG 3
32.20.32.1—*3
+Y DATA REG 4
32.20.33.1—*4
+Y DATA REG 8
32.20.34.1—*5
+Y DATA REG 1
32 20.32.1—*6
+Y DATA REG 5
32.20.33.1—*7
+Y DATA REG 6
32.20.33.1—*8
+Y DATA REG 7
32.20.34.1—*9
C A D E B
+0 RP Y Y 21BA 4B09 Z6N- 01 3E
P
P
DE RP Y Y 21BA 4C23 DFR- 04 5E
Q
-Y DATA REG 1+2 +3+4+5+6+7+8+9
32.20.64.1
32.20.65.1
F G H Q
+0 RP Y Y 21BA 4B09 Z6N- 02 3F
R
I RP Y Y 21BA 4C14 Z6P- 01 4F
A
C
DE RP Y Y 21BB 4B22 DFR- 01 5F
A
-Y DATA REG NOT NUMERIC
32.20.64.1
32.20.65.1
+Y DATA REG 9
32.20.34.1—*A
+Y DATA REG 0
32.20.31.1—*B
A B D C
+0 RP Y Y 21BA 4A09 DKY- 02 56
6
+Y DATA REG 12
32.20.31.1—*C
+Y DATA REG 11
32.20.31.1—*D
-Y ANY BIT
*H—32.20.45.1
-Y DATA REG 0
32.20.31.1—*E
-Y DATA REG 8
32.20.34.1—*F
D C B A E
+0 RP Y Y 21BA 4A10 Z6L- 01 5H
6
-Y DATA REG 12+ 11+9+NOT0+NOT8
32.20.66.1
B
R-12 RP Y Y 21BA 4C09 DFJ- 02 6J

*1—21B4F026
*7—21B4E02Q
*D—21B4E02H
———21B3C32P

*2—21B4E02M
*8—21B4E02R
*E—21B4F02F

*3—21B4E02N
*9—21B4F02A
*F—21B4F02Q

*4—21B4E02P
*A—21B4F02C
*6—21B4A03A

*5—21B4F02B
*B—21B4E02K
———21B1C32A

*6—21B4E02L
*C—21B4E026
*H—21B4C01P

COMMENTS

TAG	DATE	E.C.NO.	TAG	DATE	E.C.NO.	TAG	DATE	E.C.NO.	TAG	DATE	E.C.NO.
A	09-02-64	121550M	B	10-16-64	121567						

2-

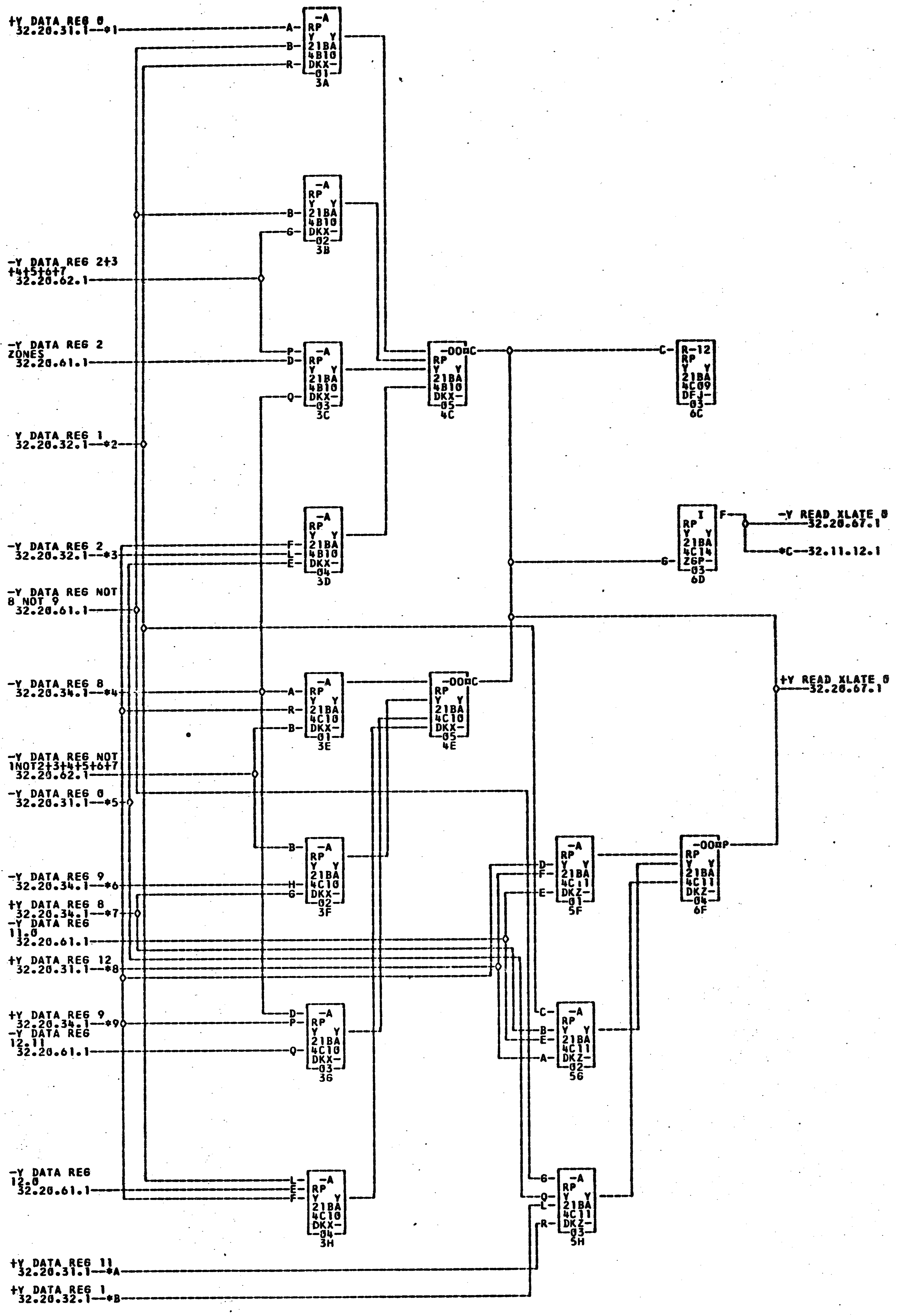
+Y DATA REG 0
32.20.31.1--*1
-Y DATA REG 2+3
+4+5+6+7
32.20.62.1
-Y DATA REG 2
ZONES
32.20.61.1
Y DATA REG 1
32.20.32.1--*2
-Y DATA REG 2
32.20.32.1--*3
-Y DATA REG NOT
8 NOT 9
32.20.61.1
-Y DATA REG 8
32.20.34.1--*4
-Y DATA REG NOT
1NOT2+3+4+5+6+7
32.20.62.1
-Y DATA REG 0
32.20.31.1--*5
-Y DATA REG 9
32.20.34.1--*6
+Y DATA REG 8
32.20.34.1--*7
-Y DATA REG
11.0
32.20.61.1
+Y DATA REG 12
32.20.31.1--*8
+Y DATA REG 9
32.20.34.1--*9
-Y DATA REG
12.11
32.20.61.1
-Y DATA REG
12.0
32.20.61.1
+Y DATA REG 11
32.20.31.1--*A
+Y DATA REG 1
32.20.32.1--*B
-A RP Y Y 21BA 4B10 DKX- -01- 3A
-A RP Y Y 21BA 4B10 DKX- -02- 3B
-A RP Y Y 21BA 4B10 DKX- -03- 3C
-A RP Y Y 21BA 4B10 DKX- -04- 3D
-A RP Y Y 21BA 4C10 DKX- -01- 3E
-A RP Y Y 21BA 4C10 DKX- -02- 3F
-A RP Y Y 21BA 4C10 DKX- -03- 3G
-A RP Y Y 21BA 4C10 DKX- -04- 3H
-00 C RP Y Y 21BA 4B10 DKX- -05- 4C
-00 C RP Y Y 21BA 4C10 DKX- -05- 4E
-A RP Y Y 21BA 4C11 DKZ- -01- 5F
-A RP Y Y 21BA 4C11 DKZ- -02- 5G
-A RP Y Y 21BA 4C11 DKZ- -03- 5H
R-12 RP Y Y 21BA 4C09 DFJ- -03- 6C
I RP Y Y 21BA 4C14 Z6P- -03- 6D
-00 P RP Y Y 21BA 4C11 DKZ- -04- 6F
A B R G P D Q F L E H C
-Y READ XLATE 0
32.20.67.1
*C--32.11.12.1
+Y READ XLATE 0
32.20.67.1

*1--21B4E02K
*7--21B4F02B
-------21B1C32M

*2--21B4F02G
*8--21B4E02G

*3--21B4F02H
*9--21B4F02C

*4--21B4F02Q
*A--21B4E02M

*5--21B4F02F
*B--21B4E02L

*6--21B4F02R
*C--21B4A03M

COMMENTS .

TAG	DATE	E.C.NO.	TAG	DATE	E.C.NO.	TAG	DATE	E.C.NO.	TAG	DATE	E.C.NO.
A	09-02-64	121550M									

2-1

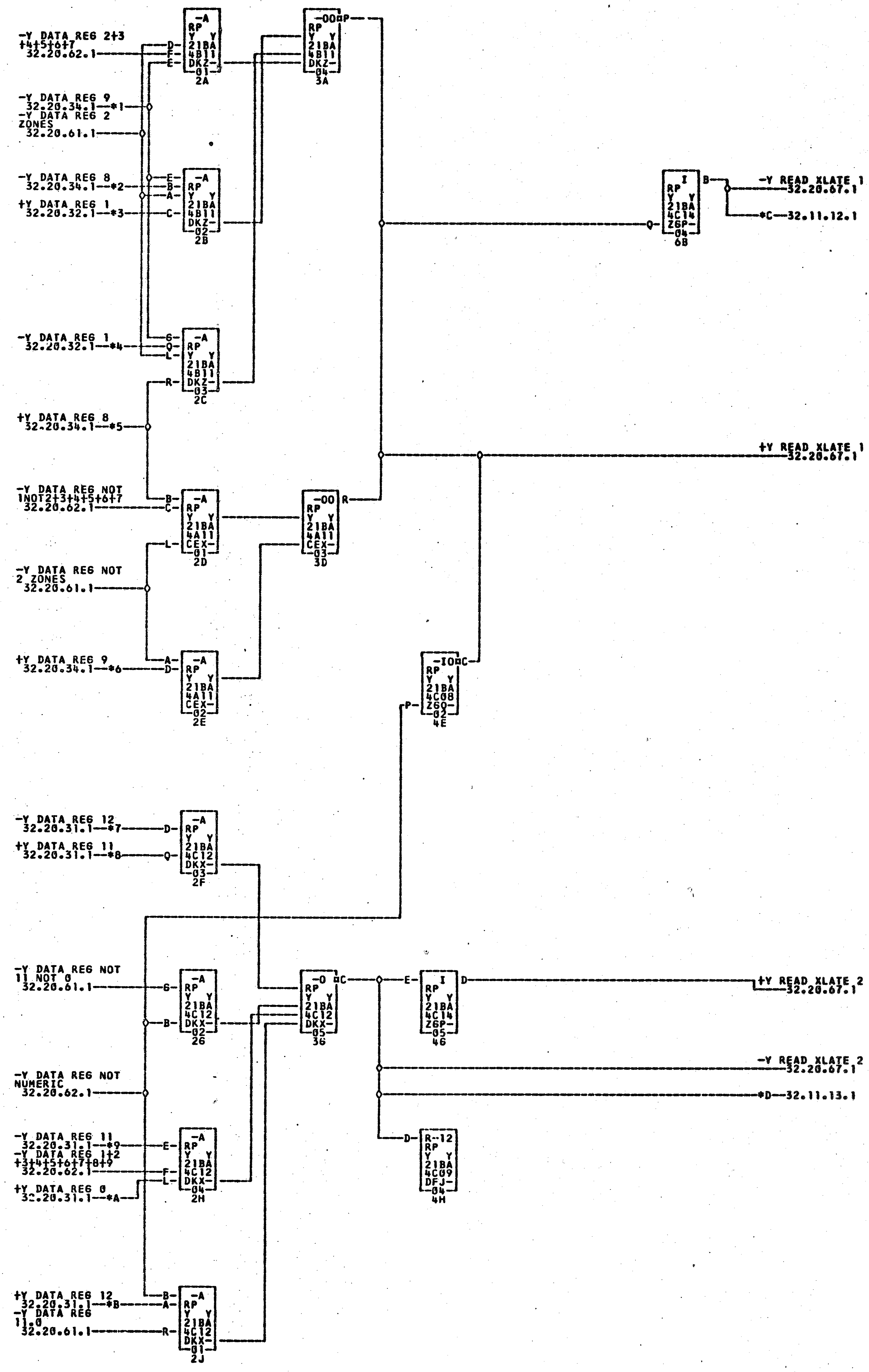
-Y DATA REG 2+3 +4+5+6+7 32.20.62.1
-Y DATA REG 9 32.20.34.1 *1
-Y DATA REG 2 ZONES 32.20.61.1
-Y DATA REG 8 32.20.34.1 *2
+Y DATA REG 1 32.20.32.1 *3
-Y DATA REG 1 32.20.32.1 *4
+Y DATA REG 8 32.20.34.1 *5
-Y DATA REG NOT 1NOT2+3+4+5+6+7 32.20.62.1
-Y DATA REG NOT 2 ZONES 32.20.61.1
+Y DATA REG 9 32.20.34.1 *6
-A RP Y Y 21BA 4B11 DKZ 01 2A
-OO P RP Y Y 21BA 4B11 DKZ 04 3A
-A RP Y Y 21BA 4B11 DKZ 02 2B
-A RP Y Y 21BA 4B11 DKZ 03 2C
-A RP Y Y 21BA 4A11 CEX 01 2D
-OO R RP Y Y 21BA 4A11 CEX 03 3D
-A RP Y Y 21BA 4A11 CEX 02 2E
I RP Y Y 21BA 4C14 Z6P 04 6B
-Y READ XLATE 1 32.20.67.1
*C 32.11.12.1
+Y READ XLATE 1 32.20.67.1
-IO C RP Y Y 21BA 4C08 Z6Q 02 4E
-Y DATA REG 12 32.20.31.1 *7
+Y DATA REG 11 32.20.31.1 *8
-A RP Y Y 21BA 4C12 DKX 03 2F
-Y DATA REG NOT 11 NOT 0 32.20.61.1
-A RP Y Y 21BA 4C12 DKX 02 2G
-O C RP Y Y 21BA 4C12 DKX 05 3G
I RP Y Y 21BA 4C14 Z6P 05 4G
+Y READ XLATE 2 32.20.67.1
-Y READ XLATE 2 32.20.67.1
*D 32.11.13.1
-Y DATA REG NOT NUMERIC 32.20.62.1
-Y DATA REG 11 32.20.31.1 *9
-Y DATA REG 1+2 +3+4+5+6+7+8+9 32.20.62.1
+Y DATA REG 0 32.20.31.1 *A
-A RP Y Y 21BA 4C12 DKX 04 2H
R-12 RP Y Y 21BA 4C09 DFJ 04 4H
+Y DATA REG 12 32.20.31.1 *B
-Y DATA REG 11.0 32.20.61.1
-A RP Y Y 21BA 4C12 DKX 01 2J

*1--21B4F02R
*7--21B4F02D
------21B1C32L

*2--21B4F02Q
*8--21B4E02H
*D--21B4A03K

*3--21B4E02L
*9--21B4F02E
------21B1C32K

*4--21B4F02G
*A--21B4E02K

*5--21B4F02B
*B--21B4E02G

*6--21B4F02C
*C--21B4A03L

COMMENTS

TAG	DATE	E.C.NO.	TAG	DATE	E.C.NO.	TAG	DATE	E.C.NO.	TAG	DATE	E.C.NO.
A	09-02-64	121550M									

0826695

READER TRANSLATE 3 AND 4

2821 RP 32.20.65.1

2-7

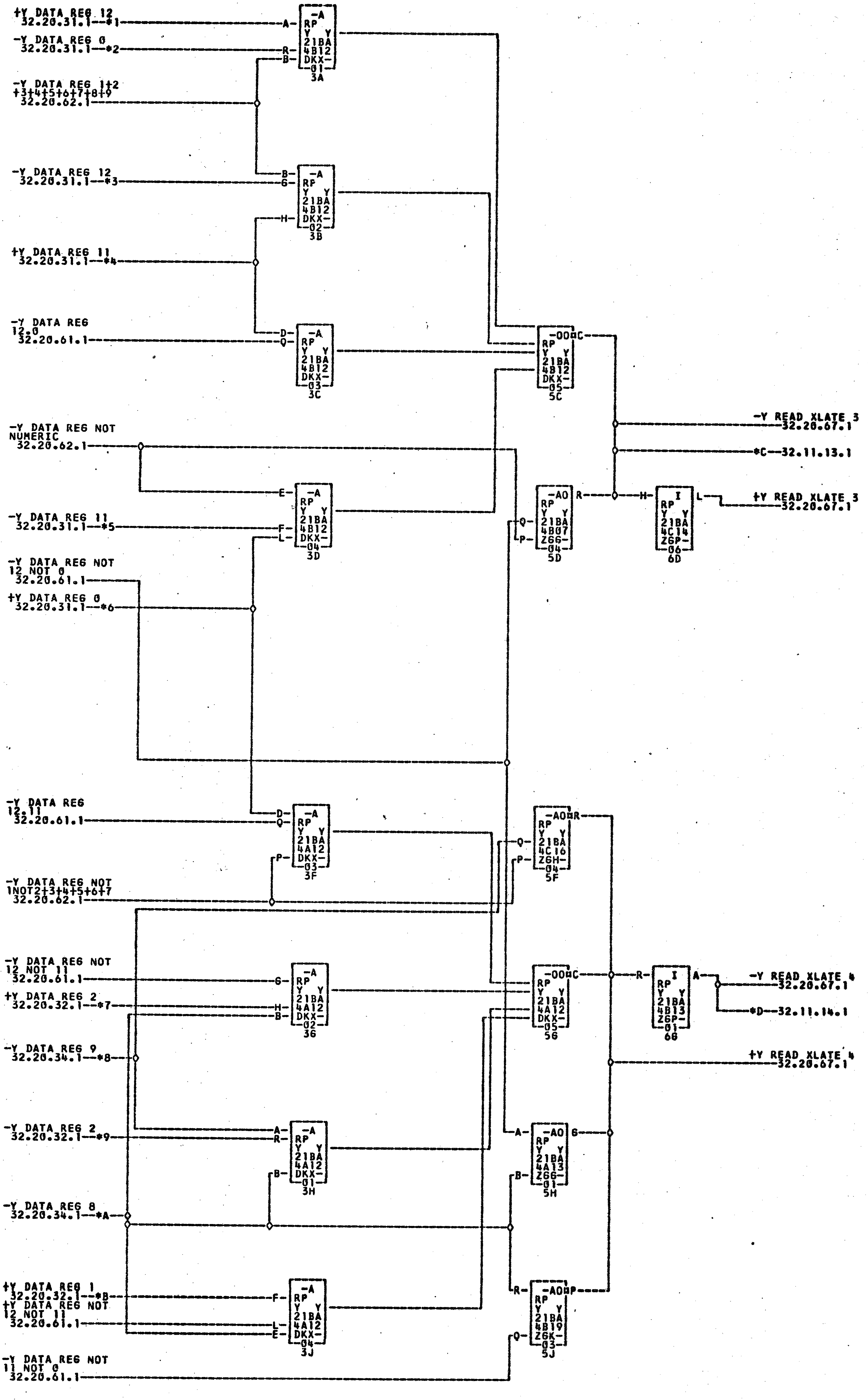
+Y DATA REG 12 32.20.31.1--*1
-Y DATA REG 0 32.20.31.1--*2
-Y DATA REG 1+2 +3+4+5+6+7+8+9 32.20.62.1
-Y DATA REG 12 32.20.31.1--*3
+Y DATA REG 11 32.20.31.1--*4
-Y DATA REG 12.0 32.20.61.1
-Y DATA REG NOT NUMERIC 32.20.62.1
-Y DATA REG 11 32.20.31.1--*5
-Y DATA REG NOT 12 NOT 0 32.20.61.1
+Y DATA REG 0 32.20.31.1--*6
-Y DATA REG 12.11 32.20.61.1
-Y DATA REG NOT 1NOT2+3+4+5+6+7 32.20.62.1
-Y DATA REG NOT 12 NOT 11 32.20.61.1
+Y DATA REG 2 32.20.32.1--*7
-Y DATA REG 9 32.20.34.1--*8
-Y DATA REG 2 32.20.32.1--*9
-Y DATA REG 8 32.20.34.1--*A
+Y DATA REG 1 32.20.32.1--*B
+Y DATA REG NOT 12 NOT 11 32.20.61.1
-Y DATA REG NOT 11 NOT 0 32.20.61.1
-A RP Y Y 21BA 4B12 DKX- -01- 3A
-A RP Y Y 21BA 4B12 DKX- -02- 3B
-A RP Y Y 21BA 4B12 DKX- -03- 3C
-A RP Y Y 21BA 4B12 DKX- -04- 3D
-A RP Y Y 21BA 4A12 DKX- -03- 3F
-A RP Y Y 21BA 4A12 DKX- -02- 3G
-A RP Y Y 21BA 4A12 DKX- -01- 3H
-A RP Y Y 21BA 4A12 DKX- -04- 3J
-OO RP Y Y 21BA 4B12 DKX- -05- 5C
-AO RP Y Y 21BA 4B07 ZGG- -04- 5D
-AO RP Y Y 21BA 4C16 ZGH- -04- 5F
-OO RP Y Y 21BA 4A12 DKX- -05- 5G
-AO RP Y Y 21BA 4A13 ZGG- -01- 5H
-AO RP Y Y 21BA 4B19 ZGK- -03- 5J
I RP Y Y 21BA 4C14 ZGP- -06- 6D
I RP Y Y 21BA 4B13 ZGP- -01- 6G
-Y READ XLATE 3 32.20.67.1
*C--32.11.13.1
+Y READ XLATE 3 32.20.67.1
-Y READ XLATE 4 32.20.67.1
*D--32.11.14.1
+Y READ XLATE 4 32.20.67.1

*1--21B4E02G
*7--21B4E02M
------21B1C32H

*2--21B4F02F
*8--21B4F02R
*D--21B4A03G

*3--21B4F02D
*9--21B4F02H
------21B1C32G

*4--21B4E02H
*A--21B4F02Q

*5--21B4F02E
*B--21B4E02L

*6--21B4E02K
*C--21B4A03H

COMMENTS

TAG	DATE	E.C.NO.	TAG	DATE	E.C.NO.	TAG	DATE	E.C.NO.	TAG	DATE	E.C.NO.
A	09-02-64	121550M									

READER TRANSLATE 5,6 AND 7

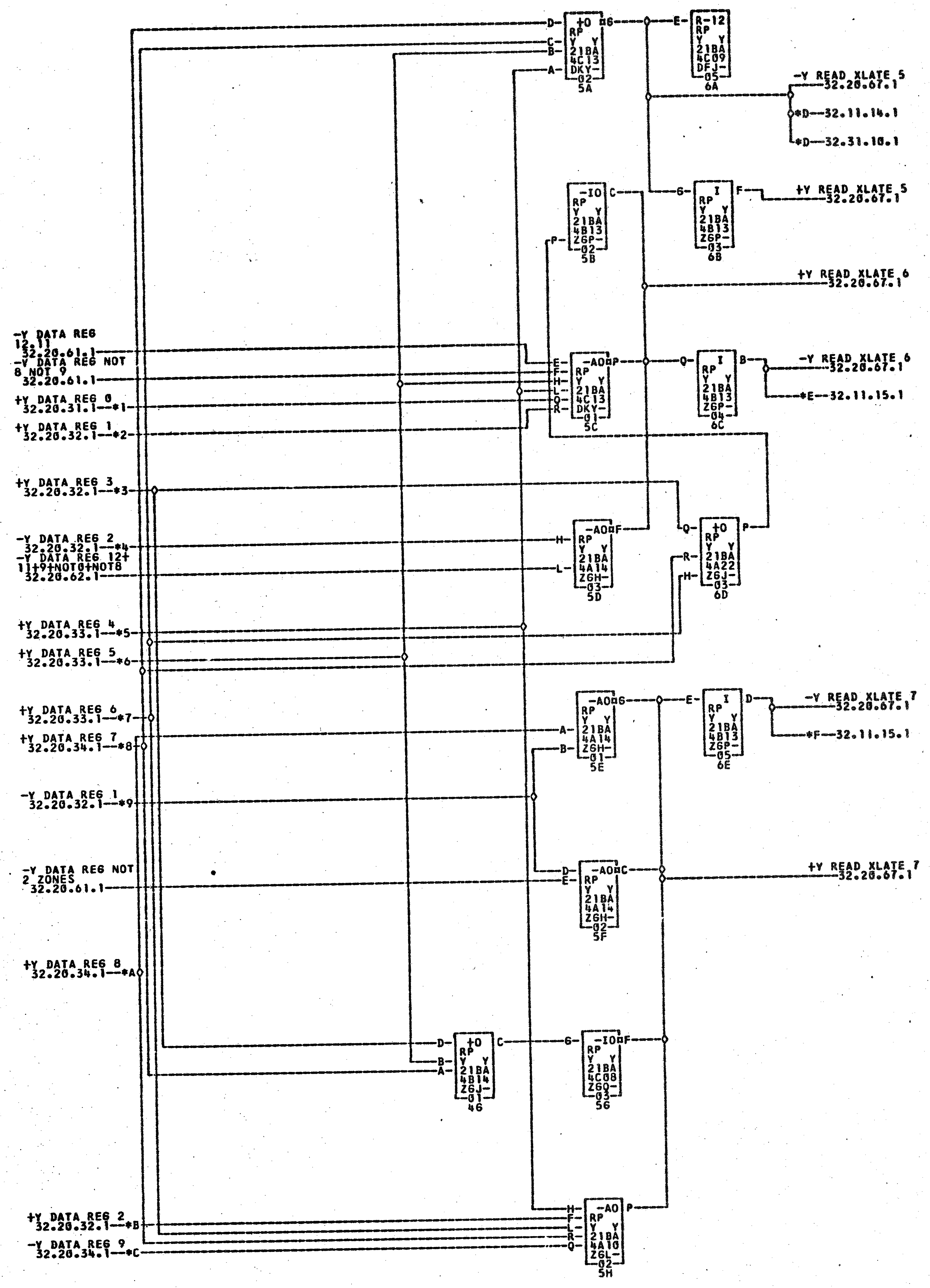
-Y DATA REG 12.11 32.20.61.1
-Y DATA REG NOT 8 NOT 9 32.20.61.1
+Y DATA REG 0 32.20.31.1—*1
+Y DATA REG 1 32.20.32.1—*2
+Y DATA REG 3 32.20.32.1—*3
-Y DATA REG 2 32.20.32.1—*4
-Y DATA REG 12+11+9+NOT0+NOT8 32.20.62.1
+Y DATA REG 4 32.20.33.1—*5
+Y DATA REG 5 32.20.33.1—*6
+Y DATA REG 6 32.20.33.1—*7
+Y DATA REG 7 32.20.34.1—*8
-Y DATA REG 1 32.20.32.1—*9
-Y DATA REG NOT 2 ZONES 32.20.61.1
+Y DATA REG 8 32.20.34.1—*A
+Y DATA REG 2 32.20.32.1—*B
-Y DATA REG 9 32.20.34.1—*C
+O RP Y Y 21BA 4C13 DKY- 02 5A
R-12 RP Y Y 21BA 4C09 DFJ- 05 6A
-IO RP Y Y 21BA 4B13 Z6P- 02 5B
I RP Y Y 21BA 4B13 Z6P- 03 6B
-AO RP Y Y 21BA 4C13 DKY- 01 5C
I RP Y Y 21BA 4B13 Z6P- 04 6C
-AO RP Y Y 21BA 4A14 Z6H- 03 5D
+O RP Y Y 21BA 4A22 Z6J- 03 6D
-AO RP Y Y 21BA 4A14 Z6H- 01 5E
I RP Y Y 21BA 4B13 Z6P- 05 6E
-AO RP Y Y 21BA 4A14 Z6H- 02 5F
+O RP Y Y 21BA 4B14 Z6J- 01 46
-IO RP Y Y 21BA 4C08 Z6Q- 03 56
-AO RP Y Y 21BA 4A10 Z6L- 02 5H
-Y READ XLATE 5 32.20.67.1
*D—32.11.14.1
*D—32.31.10.1
+Y READ XLATE 5 32.20.67.1
+Y READ XLATE 6 32.20.67.1
-Y READ XLATE 6 32.20.67.1
*E—32.11.15.1
-Y READ XLATE 7 32.20.67.1
*F—32.11.15.1
+Y READ XLATE 7 32.20.67.1

*1—21B4E02K
*7—21B4E02R
*D—21B4A03F

*2—21B4E02L
*8—21B4F02A
——21B1C32F

*3—21B4E02N
*9—21B4F02G
*E—21B4A03E

*4—21B4F02H
*A—21B4F02B
——21B1C32E

*5—21B4E02P
*B—21B4E02M
*F—21B4A03D

*6—21B4E02Q
*C—21B4F02R
——21B1C32D

COMMENTS

TAG	DATE	E.C.NO.	TAG	DATE	E.C.NO.	TAG	DATE	E.C.NO.	TAG	DATE	E.C.NO.
A	09-02-64	121550M									

2-1

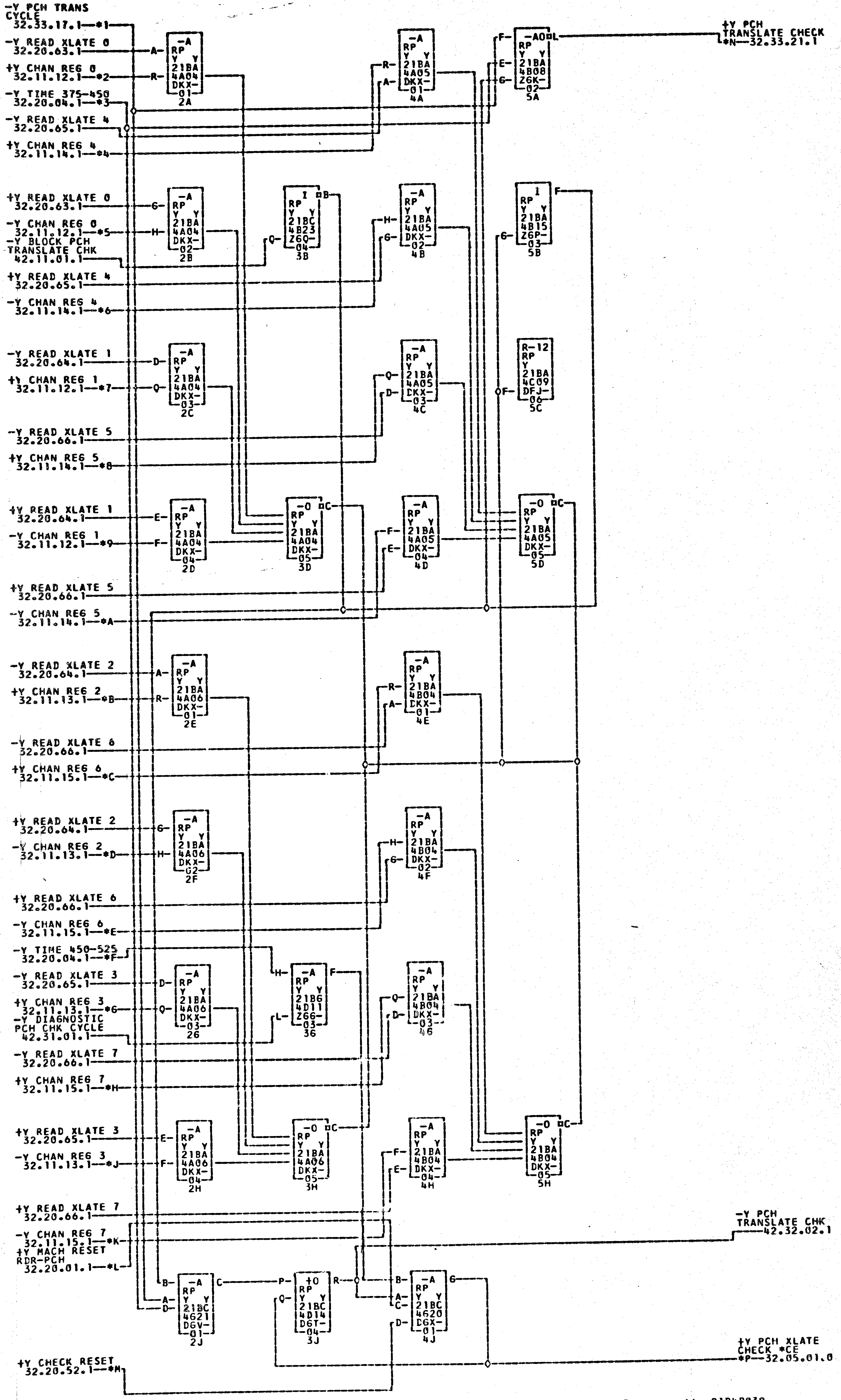
-Y PCH TRANS CYCLE 32.33.17.1—*1
-Y READ XLATE 0 32.20.63.1
+Y CHAN REG 0 32.11.12.1—*2
-Y TIME 375-450 32.20.04.1—*3
-Y READ XLATE 4 32.20.65.1
+Y CHAN REG 4 32.11.14.1—*4
+Y READ XLATE 0 32.20.63.1
-Y CHAN REG 0 32.11.12.1—*5
-Y BLOCK PCH TRANSLATE CHK 42.11.01.1
+Y READ XLATE 4 32.20.65.1
-Y CHAN REG 4 32.11.14.1—*6
-Y READ XLATE 1 32.20.64.1
+Y CHAN REG 1 32.11.12.1—*7
-Y READ XLATE 5 32.20.66.1
+Y CHAN REG 5 32.11.14.1—*8
+Y READ XLATE 1 32.20.64.1
-Y CHAN REG 1 32.11.12.1—*9
+Y READ XLATE 5 32.20.66.1
-Y CHAN REG 5 32.11.14.1—*A
-Y READ XLATE 2 32.20.64.1
+Y CHAN REG 2 32.11.13.1—*B
-Y READ XLATE 6 32.20.66.1
+Y CHAN REG 6 32.11.15.1—*C
+Y READ XLATE 2 32.20.64.1
-Y CHAN REG 2 32.11.13.1—*D
+Y READ XLATE 6 32.20.66.1
-Y CHAN REG 6 32.11.15.1—*E
-Y TIME 450-525 32.20.04.1—*F
-Y READ XLATE 3 32.20.65.1
+Y CHAN REG 3 32.11.13.1—*G
-Y DIAGNOSTIC PCH CHK CYCLE 42.31.01.1
-Y READ XLATE 7 32.20.66.1
+Y CHAN REG 7 32.11.15.1—*H
+Y READ XLATE 3 32.20.65.1
-Y CHAN REG 3 32.11.13.1—*J
+Y READ XLATE 7 32.20.66.1
-Y CHAN REG 7 32.11.15.1—*K
+Y MACH RESET RDR-PCH 32.20.01.1—*L
+Y CHECK RESET 32.20.52.1—*M
+Y PCH TRANSLATE CHECK *N—32.33.21.1
-Y PCH TRANSLATE CHK 42.32.02.1
+Y PCH XLATE CHECK *CE *P—32.05.01.0
-A RP Y Y 21BA 4A04 DKX-01 2A
-A RP Y Y 21BA 4A05 DKX-01 4A
-AO RP Y Y 21BA 4B08 ZGK-02 5A
-A RP Y Y 21BA 4A04 DKX-02 2B
I RP Y Y 21BC 4B23 ZGQ-04 3B
-A RP Y Y 21BA 4A05 DKX-02 4B
I RP Y Y 21BA 4B15 ZGP-03 5B
-A RP Y Y 21BA 4A04 DKX-03 2C
-A RP Y Y 21BA 4A05 DKX-03 4C
R-12 RP Y 21BA 4C09 DFJ-06 5C
-A RP Y Y 21BA 4A04 DKX-04 2D
-O RP Y Y 21BA 4A04 DKX-05 3D
-A RP Y Y 21BA 4A05 DKX-04 4D
-O RP Y Y 21BA 4A05 DKX-05 5D
-A RP Y Y 21BA 4A06 DKX-01 2E
-A RP Y Y 21BA 4B04 DKX-01 4E
-A RP Y Y 21BA 4A06 DKX-02 2F
-A RP Y Y 21BA 4B04 DKX-02 4F
-A RP Y Y 21BA 4A06 DKX-03 2G
-A RP Y Y 21BG 4D11 ZGG-03 3G
-A RP Y Y 21BA 4B04 DKX-03 4G
-A RP Y Y 21BA 4A06 DKX-04 2H
-O RP Y Y 21BA 4A06 DKX-05 3H
-A RP Y Y 21BA 4B04 DKX-04 4H
-O RP Y Y 21BA 4B04 DKX-05 5H
-A RP Y Y 21BC 4G21 DGV-01 2J
+O RP Y Y 21BC 4D14 DGT-04 3J
-A RP Y Y 21BC 4G20 DGX-01 4J

*1—21B4A03Q
*7—21B4B03B
*D—21B4B03M
*K—21B4C03A
———21B1G32A

*2—21B4B03A
*8—21B4B03F
*E—21B4B03R
*L—21B4A02Q
———21B1E01R

*3—21B4A01D
*9—21B4B03L
*F—21B4A01E
*M—21B4A02M
———CERPB015

*4—21B4B03E
*A—21B4B03Q
*G—21B4B03D
*N—21B4A03P

*5—21B4B03K
*B—21B4B03C
*H—21B4B03H
———21B1C32P

*6—21B4B03P
*C—21B4B03G
*J—21B4B03N
*P—21B4E03A

MDM.3060

COMMENTS

TAG	DATE	E.C.NO.	TAG	DATE	E.C.NO.	TAG	DATE	E.C.NO.	TAG	DATE	E.C.NO.
A	09-02-64	121550M	B	10-16-64	121567	C	11-10-64	121572	D	12-19-64	121583
E	02-15-65	121594	F	08-18-65	124270	G	11-18-65	125601			

27

PUNCH TRANSLATE GATING NO. 1

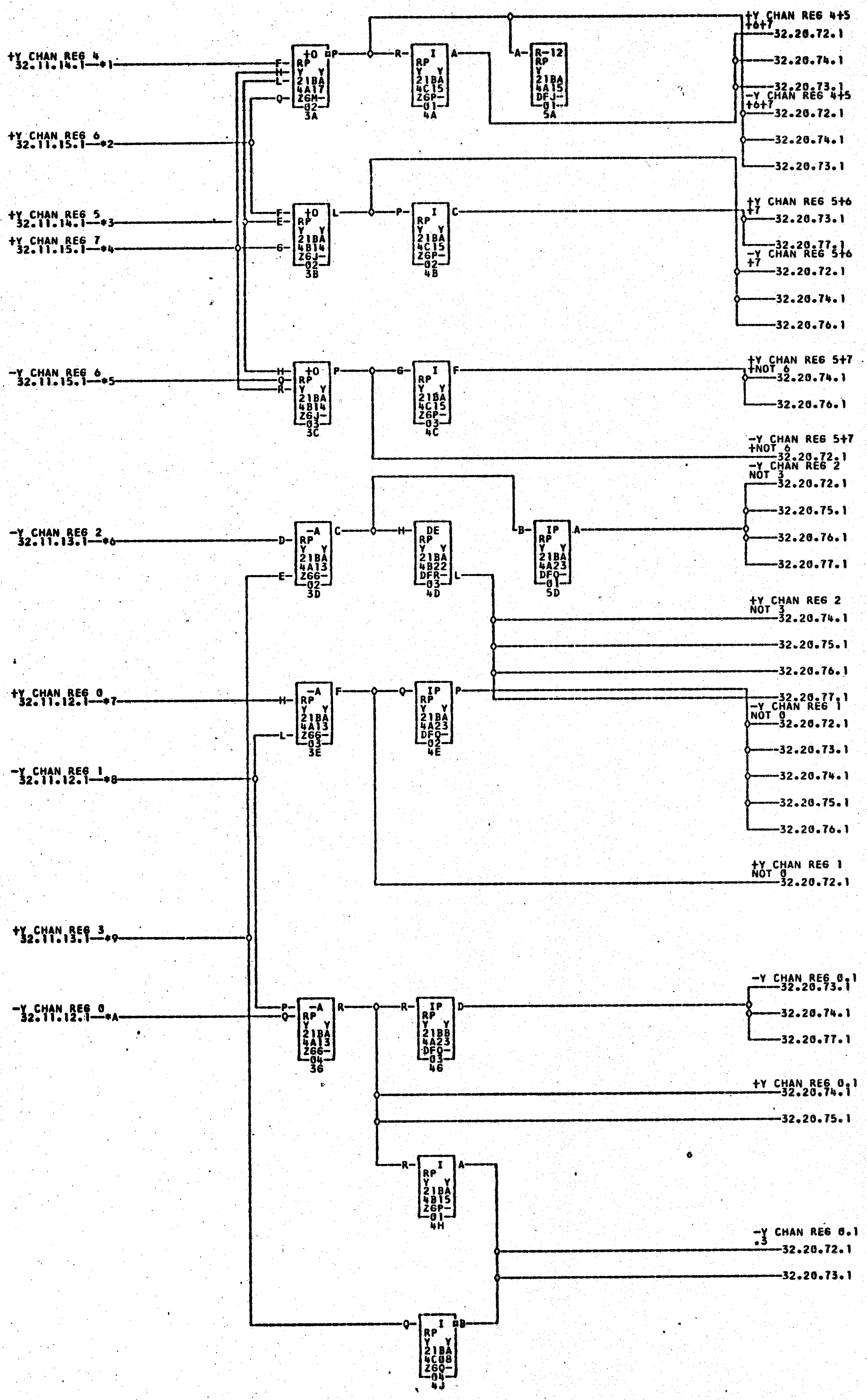
+Y CHAN REG 4
32.11.14.1—*1
+Y CHAN REG 6
32.11.15.1—*2
+Y CHAN REG 5
32.11.14.1—*3
+Y CHAN REG 7
32.11.15.1—*4
-Y CHAN REG 6
32.11.15.1—*5
-Y CHAN REG 2
32.11.13.1—*6
+Y CHAN REG 0
32.11.12.1—*7
-Y CHAN REG 1
32.11.12.1—*8
+Y CHAN REG 3
32.11.13.1—*9
-Y CHAN REG 0
32.11.12.1—*A
+O RP 21BA 4A17 Z6M 02 3A
I RP 21BA 4C15 Z6P 01 4A
R-12 RP 21BA 4A15 DFJ 01 5A
+O RP 21BA 4B14 Z6J 02 3B
I RP 21BA 4C15 Z6P 02 4B
+O RP 21BA 4B14 Z6J 03 3C
I RP 21BA 4C15 Z6P 03 4C
-A RP 21BA 4A13 Z66 02 3D
DE RP 21BA 4B22 DFR 03 4D
IP RP 21BA 4A23 DFQ 01 5D
-A RP 21BA 4A13 Z66 03 3E
IP RP 21BA 4A23 DFQ 02 4E
-A RP 21BA 4A13 Z66 04 3G
IP RP 21BB 4A23 DFQ 03 4G
I RP 21BA 4B15 Z6P 01 4H
I RP 21BA 4C08 Z6Q 04 4J
+Y CHAN REG 4+5 +6+7
32.20.72.1
32.20.74.1
32.20.73.1
-Y CHAN REG 4+5 +6+7
32.20.72.1
32.20.74.1
32.20.73.1
+Y CHAN REG 5+6 +7
32.20.73.1
32.20.77.1
-Y CHAN REG 5+6 +7
32.20.72.1
32.20.74.1
32.20.76.1
+Y CHAN REG 5+7 +NOT 6
32.20.74.1
32.20.76.1
-Y CHAN REG 5+7 +NOT 6
32.20.72.1
-Y CHAN REG 2 NOT 3
32.20.72.1
32.20.75.1
32.20.76.1
32.20.77.1
+Y CHAN REG 2 NOT 3
32.20.74.1
32.20.75.1
32.20.76.1
32.20.77.1
-Y CHAN REG 1 NOT 0
32.20.72.1
32.20.73.1
32.20.74.1
32.20.75.1
32.20.76.1
+Y CHAN REG 1 NOT 0
32.20.72.1
-Y CHAN REG 0.1
32.20.73.1
32.20.74.1
32.20.77.1
+Y CHAN REG 0.1
32.20.74.1
32.20.75.1
-Y CHAN REG 0.1 .3
32.20.72.1
32.20.73.1

*1—21B4B03E
*7—21B4B03A

*2—21B4B03G
*8—21B4B03L

*3—21B4B03F
*9—21B4B03D

*4—21B4B03H
*A—21B4B03K

*5—21B4B03R

*6—21B4B03M

COMMENTS

TAG	DATE	E.C.NO.	TAG	DATE	E.C.NO.	TAG	DATE	E.C.NO.	TAG	DATE	E.C.NO.
A	09-02-64	121550M	B	10-16-64	121567						

24

0826698 PUNCH TRANSLATE GATING NO. 2 2821 RP 32.20.71.1

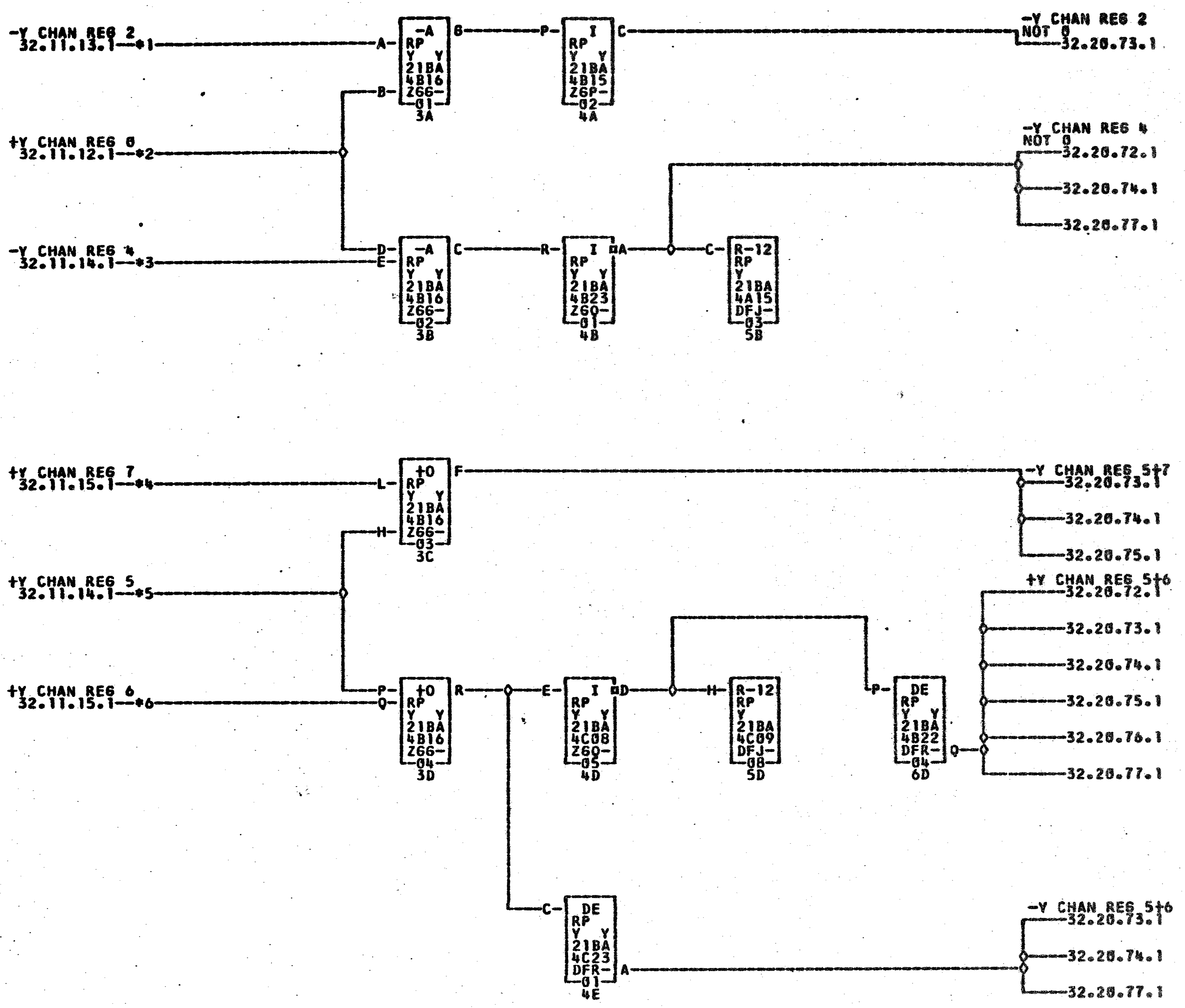

-Y CHAN REG 2
32.11.13.1--*1
+Y CHAN REG 0
32.11.12.1--*2
-Y CHAN REG 4
32.11.14.1--*3
-A RP Y Y 21BA 4B16 Z66- 01 3A
I RP Y Y 21BA 4B15 ZGP- 02 4A
-A RP Y Y 21BA 4B16 Z66- 02 3B
I RP Y Y 21BA 4B23 ZG0- 01 4B
R-12 RP Y 21BA 4A15 DFJ- 03 5B
-Y CHAN REG 2 NOT 0
32.20.73.1
-Y CHAN REG 4 NOT 0
32.20.72.1
32.20.74.1
32.20.77.1
+Y CHAN REG 7
32.11.15.1--*4
+Y CHAN REG 5
32.11.14.1--*5
+Y CHAN REG 6
32.11.15.1--*6
+0 RP Y Y 21BA 4B16 Z66- 03 3C
+0 RP Y Y 21BA 4B16 Z66- 04 3D
I RP Y Y 21BA 4C08 Z60- 05 4D
R-12 RP Y 21BA 4C09 DFJ- 08 5D
DE RP Y Y 21BA 4B22 DFR- 04 6D
DE RP Y Y 21BA 4C23 DFR- 01 4E
-Y CHAN REG 5+7
32.20.73.1
32.20.74.1
32.20.75.1
+Y CHAN REG 5+6
32.20.72.1
32.20.73.1
32.20.74.1
32.20.75.1
32.20.76.1
32.20.77.1
-Y CHAN REG 5+6
32.20.73.1
32.20.74.1
32.20.77.1

*1--21B4B03M *2--21B4B03A *3--21B4B03P *4--21B4B03H *5--21B4B03F *6--21B4B03G

COMMENTS

TAG	DATE	E.C.NO.	TAG	DATE	E.C.NO.	TAG	DATE	E.C.NO.	TAG	DATE	E.C.NO.
A	09-02-64	121550M									

2-1

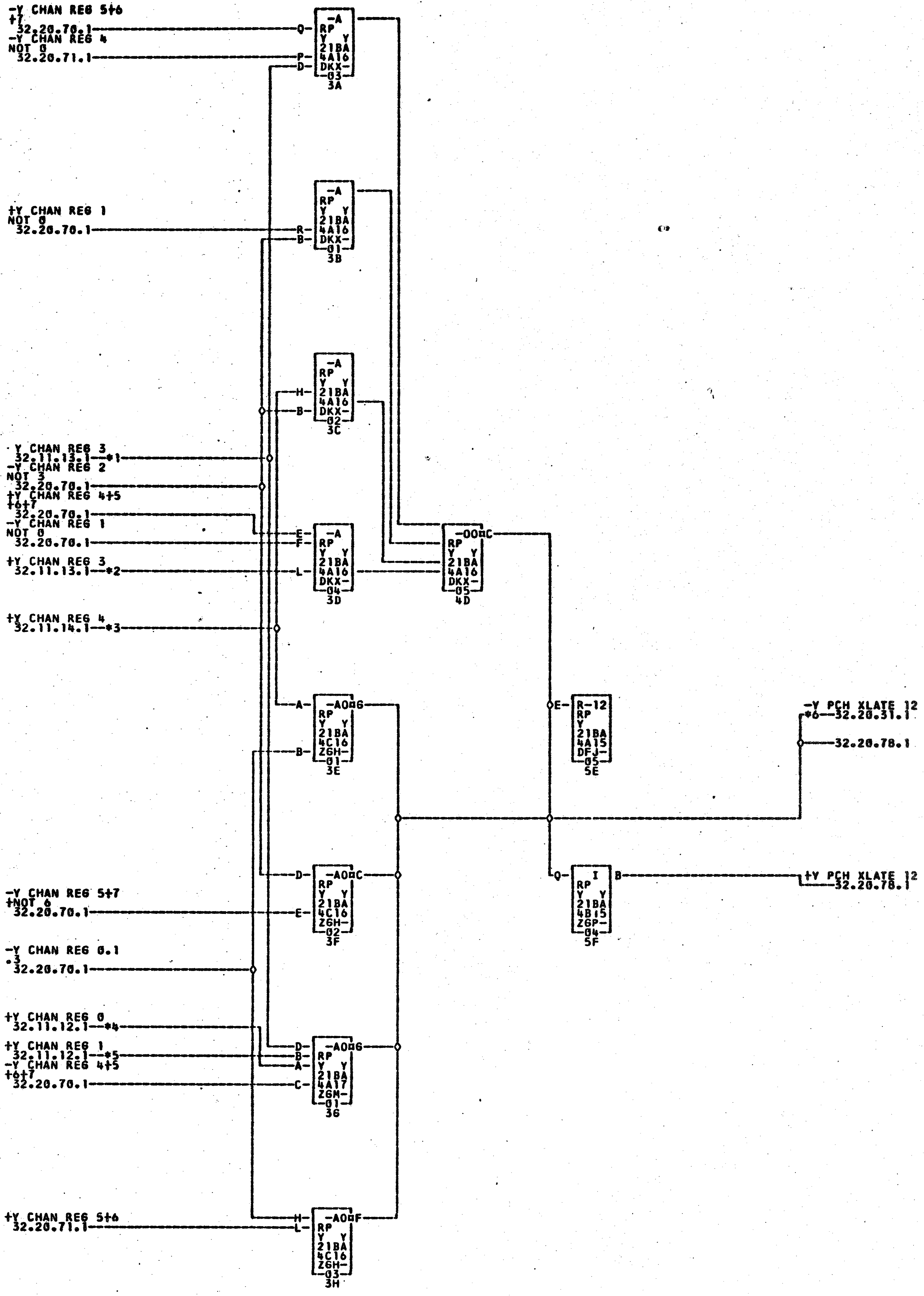
-Y CHAN REG 5+6
+7
32.20.70.1
-Y CHAN REG 4
NOT 0
32.20.71.1
+Y CHAN REG 1
NOT 0
32.20.70.1
Y CHAN REG 3
32.11.13.1--*1
-Y CHAN REG 2
NOT 3
32.20.70.1
+Y CHAN REG 4+5
+6+7
32.20.70.1
-Y CHAN REG 1
NOT 0
32.20.70.1
+Y CHAN REG 3
32.11.13.1--*2
+Y CHAN REG 4
32.11.14.1--*3
-Y CHAN REG 5+7
+NOT 6
32.20.70.1
-Y CHAN REG 0.1
.3
32.20.70.1
+Y CHAN REG 0
32.11.12.1--*4
+Y CHAN REG 1
32.11.12.1--*5
-Y CHAN REG 4+5
+6+7
32.20.70.1
+Y CHAN REG 5+6
32.20.71.1
-A RP Y Y 21BA 4A16 DKX- 03 3A
-A RP Y Y 21BA 4A16 DKX- 01 3B
-A RP Y Y 21BA 4A16 DKX- 02 3C
-A RP Y Y 21BA 4A16 DKX- 04 3D
-OO C RP Y Y 21BA 4A16 DKX- 05 4D
-AO G RP Y Y 21BA 4C16 Z6H- 01 3E
-AO C RP Y Y 21BA 4C16 Z6H- 02 3F
-AO G RP Y Y 21BA 4A17 Z6M- 01 3G
-AO F RP Y Y 21BA 4C16 Z6H- 03 3H
R-12 RP Y 21BA 4A15 DFJ- 05 5E
I RP Y Y 21BA 4B15 Z6P- 04 5F
Q P D R B H B E F L A B D E D B A C H L E Q B
-Y PCH XLATE 12
*6--32.20.31.1
32.20.78.1
+Y PCH XLATE 12
32.20.78.1

*1--21B4B03N
--21B3C32A

*2--21B4B03D

*3--21B4B03E

*4--21B4B03A

*5--21B4B03B

*6--21B4C01A

COMMENTS

TAG	DATE	E.C.NO.	TAG	DATE	E.C.NO.	TAG	DATE	E.C.NO.	TAG	DATE	E.C.NO.
A	09-02-64	121550M									

Z-1

PUNCH TRANSLATE 11

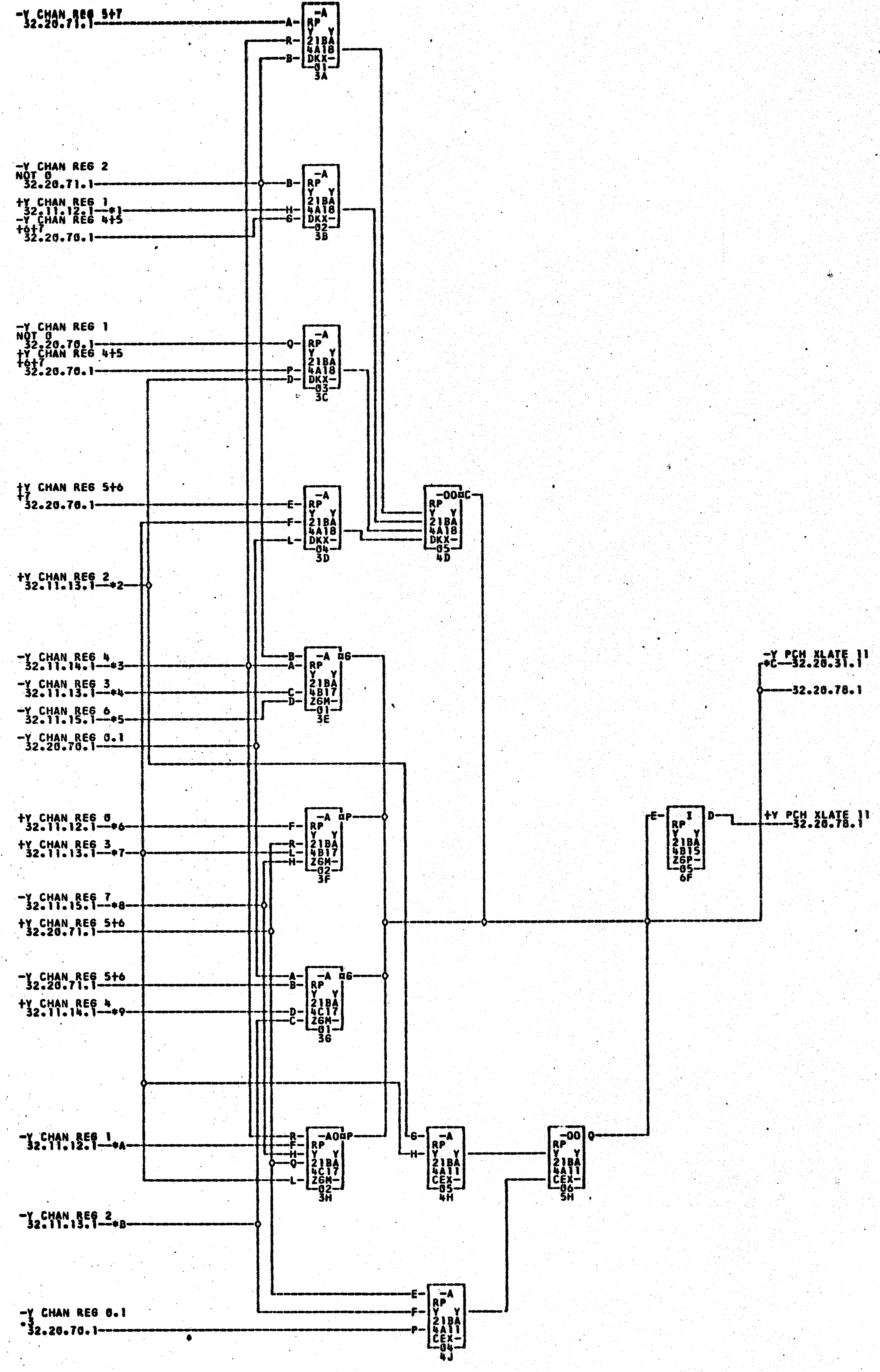
-Y CHAN REG 5+7 32.20.71.1
-Y CHAN REG 2 NOT 0 32.20.71.1
+Y CHAN REG 1 32.11.12.1—*1
-Y CHAN REG 4+5 +6+7 32.20.70.1
-Y CHAN REG 1 NOT 0 32.20.70.1
+Y CHAN REG 4+5 +6+7 32.20.70.1
+Y CHAN REG 5+6 +7 32.20.70.1
+Y CHAN REG 2 32.11.13.1—*2
-Y CHAN REG 4 32.11.14.1—*3
-Y CHAN REG 3 32.11.13.1—*4
-Y CHAN REG 6 32.11.15.1—*5
-Y CHAN REG 0.1 32.20.70.1
+Y CHAN REG 0 32.11.12.1—*6
+Y CHAN REG 3 32.11.13.1—*7
-Y CHAN REG 7 32.11.15.1—*8
+Y CHAN REG 5+6 32.20.71.1
-Y CHAN REG 5+6 32.20.71.1
+Y CHAN REG 4 32.11.14.1—*9
-Y CHAN REG 1 32.11.12.1—*A
-Y CHAN REG 2 32.11.13.1—*B
-Y CHAN REG 0.1 •3 32.20.70.1
-A RP Y Y 21BA 4A18 DKX- 01 3A
-A RP Y Y 21BA 4A18 DKX- 02 3B
-A RP Y Y 21BA 4A18 DKX- 03 3C
-A RP Y Y 21BA 4A18 DKX- 04 3D
-OO C RP Y Y 21BA 4A18 DKX- 05 4D
-A 6 RP Y Y 21BA 4B17 Z6M- 01 3E
-A P RP Y Y 21BA 4B17 Z6M- 02 3F
-A 6 RP Y Y 21BA 4C17 Z6M- 01 36
-AO P RP Y Y 21BA 4C17 Z6M- 02 3H
-A RP Y Y 21BA 4A11 CEX- 05 4H
-OO Q RP Y Y 21BA 4A11 CEX- 06 5H
-A RP Y Y 21BA 4A11 CEX- 04 4J
E I D RP Y Y 21BA 4B15 Z6P- 05 6F
-Y PCH XLATE 11 *C—32.20.31.1
32.20.78.1
+Y PCH XLATE 11 32.20.78.1
A R B H 6 Q P D E F L C G

*1—21B4B03B
*7—21B4B03D
——21B3C32B

*2—21B4B03C
*8—21B4C03A

*3—21B4B03P
*9—21B4B03E

*4—21B4B03N
*A—21B4B03L

*5—21B4B03R
*B—21B4B03M

*6—21B4B03A
*C—21B4C01B

COMMENTS

TAG	DATE	E.C.NO.	TAG	DATE	E.C.NO.	TAG	DATE	E.C.NO.	TAG	DATE	E.C.NO.
A	09-02-64	121550M									

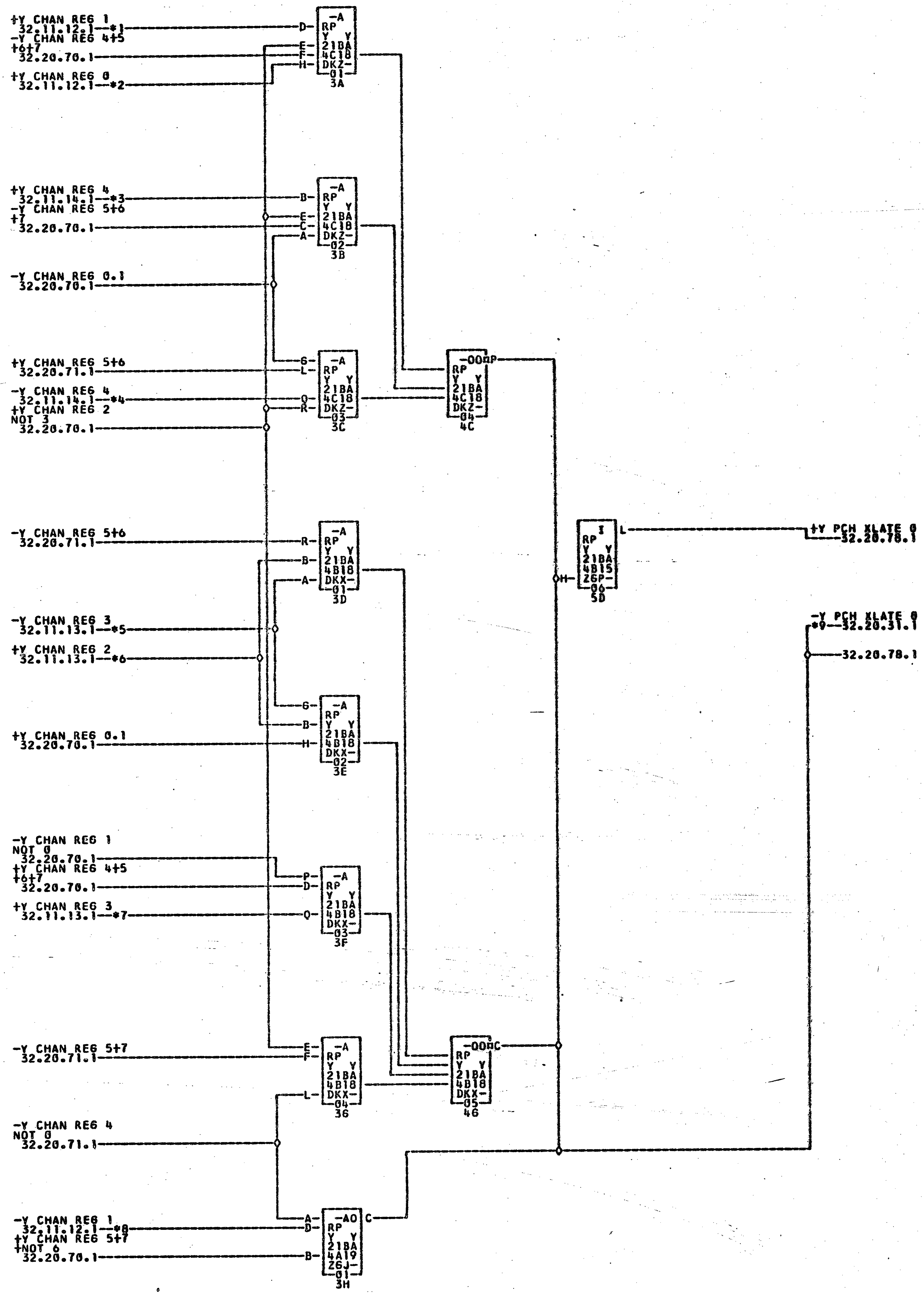

+Y CHAN REG 1 32.11.12.1—*1
-Y CHAN REG 4+5 +6+7 32.20.70.1
+Y CHAN REG 0 32.11.12.1—*2
-A RP Y Y 21BA 4C18 DKZ- -01 3A
+Y CHAN REG 4 32.11.14.1—*3
-Y CHAN REG 5+6 +7 32.20.70.1
-A RP Y Y 21BA 4C18 DKZ- -02 3B
-Y CHAN REG 0.1 32.20.70.1
+Y CHAN REG 5+6 32.20.71.1
-Y CHAN REG 4 32.11.14.1—*4
+Y CHAN REG 2 NOT 3 32.20.70.1
-A RP Y Y 21BA 4C18 DKZ- -03 3C
-OO P RP Y Y 21BA 4C18 DKZ- -04 4C
-Y CHAN REG 5+6 32.20.71.1
-A RP Y Y 21BA 4B18 DKX- -01 3D
-Y CHAN REG 3 32.11.13.1—*5
+Y CHAN REG 2 32.11.13.1—*6
+Y CHAN REG 0.1 32.20.70.1
-A RP Y Y 21BA 4B18 DKX- -02 3E
I RP Y Y 21BA 4B15 Z6P- -06 5D
+Y PCH XLATE 0 32.20.78.1
-Y PCH XLATE 0 *9—32.20.31.1
32.20.78.1
-Y CHAN REG 1 NOT 0 32.20.70.1
+Y CHAN REG 4+5 +6+7 32.20.70.1
+Y CHAN REG 3 32.11.13.1—*7
-A RP Y Y 21BA 4B18 DKX- -03 3F
-Y CHAN REG 5+7 32.20.71.1
-A RP Y Y 21BA 4B18 DKX- -04 3G
-OO C RP Y Y 21BA 4B18 DKX- -05 4G
-Y CHAN REG 4 NOT 0 32.20.71.1
-Y CHAN REG 1 32.11.12.1—*8
+Y CHAN REG 5+7 +NOT 6 32.20.70.1
-AO C RP Y Y 21BA 4A19 Z6J- -01 3H

*1—21B4B03D
*7—21B4B03D

*2—21B4B03A
*8—21B4B03L

*3—21B4B03E
*9—21B4C01C

*4—21B4B03P
——21B3C32C

*5—21B4B03N

*6—21B4B03C

COMMENTS

TAG	DATE	E.C.NO.	TAG	DATE	E.C.NO.	TAG	DATE	E.C.NO.	TAG	DATE	E.C.NO.
A	09-02-64	121550M									

PUNCH TRANSLATE 1 AND 2

2-4

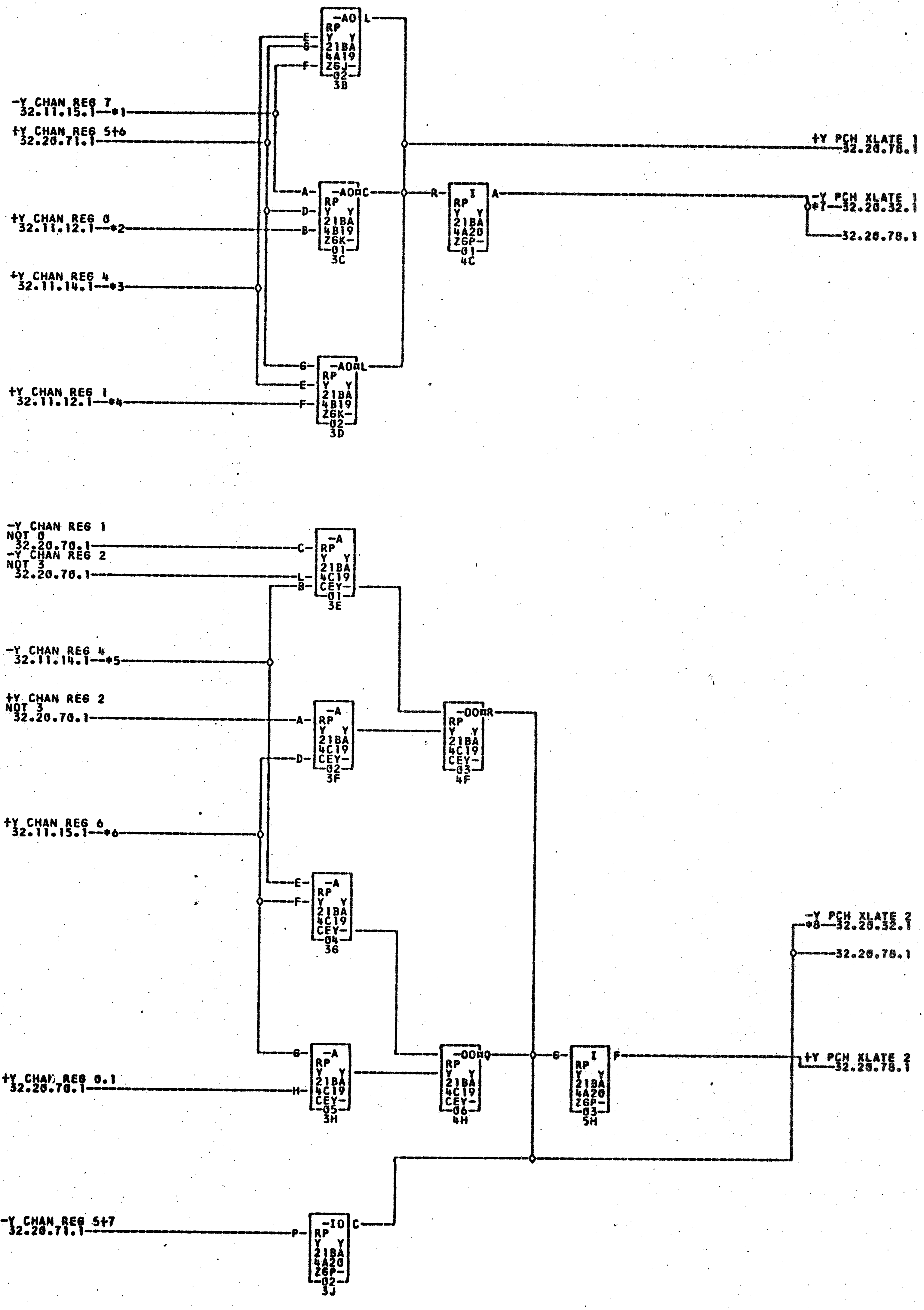
-Y CHAN REG 7
32.11.15.1--*1
+Y CHAN REG 5+6
32.20.71.1
+Y CHAN REG 0
32.11.12.1--*2
+Y CHAN REG 4
32.11.14.1--*3
+Y CHAN REG 1
32.11.12.1--*4
-AO RP Y Y 21BA 4A19 Z6J- 02 3B
E G F L
-AO RP Y Y 21BA 4B19 Z6K- 01 3C
A D B C
-AO RP Y Y 21BA 4B19 Z6K- 02 3D
G E F L
R
I RP Y Y 21BA 4A20 Z6P- 01 4C
A
+Y PCH XLATE 1
32.20.78.1
-Y PCH XLATE 1
*7--32.20.32.1
32.20.78.1
-Y CHAN REG 1
NOT 0
32.20.70.1
-Y CHAN REG 2
NOT 3
32.20.70.1
-Y CHAN REG 4
32.11.14.1--*5
+Y CHAN REG 2
NOT 3
32.20.70.1
+Y CHAN REG 6
32.11.15.1--*6
+Y CHAN REG 0.1
32.20.70.1
-Y CHAN REG 5+7
32.20.71.1
-A RP Y Y 21BA 4C19 CEY- 01 3E
C L B
-A RP Y Y 21BA 4C19 CEY- 02 3F
A D
-A RP Y Y 21BA 4C19 CEY- 04 3G
E F
-A RP Y Y 21BA 4C19 CEY- 05 3H
G H
-OO RP Y Y 21BA 4C19 CEY- 03 4F
R
-OO RP Y Y 21BA 4C19 CEY- 06 4H
Q
G
I RP Y Y 21BA 4A20 Z6P- 03 5H
F
-IO RP Y Y 21BA 4A20 Z6P- 02 3J
P C
-Y PCH XLATE 2
*8--32.20.32.1
32.20.78.1
+Y PCH XLATE 2
32.20.78.1

*1--21B4C03A
*7--21B4C01D

*2--21B4B03A
--------21B3C32D

*3--21B4B03E
*8--21B4C01E

*4--21B4B03B
--------21B3C32E

*5--21B4B03P

*6--21B4B03G

COMMENTS

TAG	DATE	E.C.NO.	TAG	DATE	E.C.NO.	TAG	DATE	E.C.NO.	TAG	DATE	E.C.NO.
A	09-02-64	121550M									

2-1

PUNCH TRANSLATE 3-4-5-6-7-8

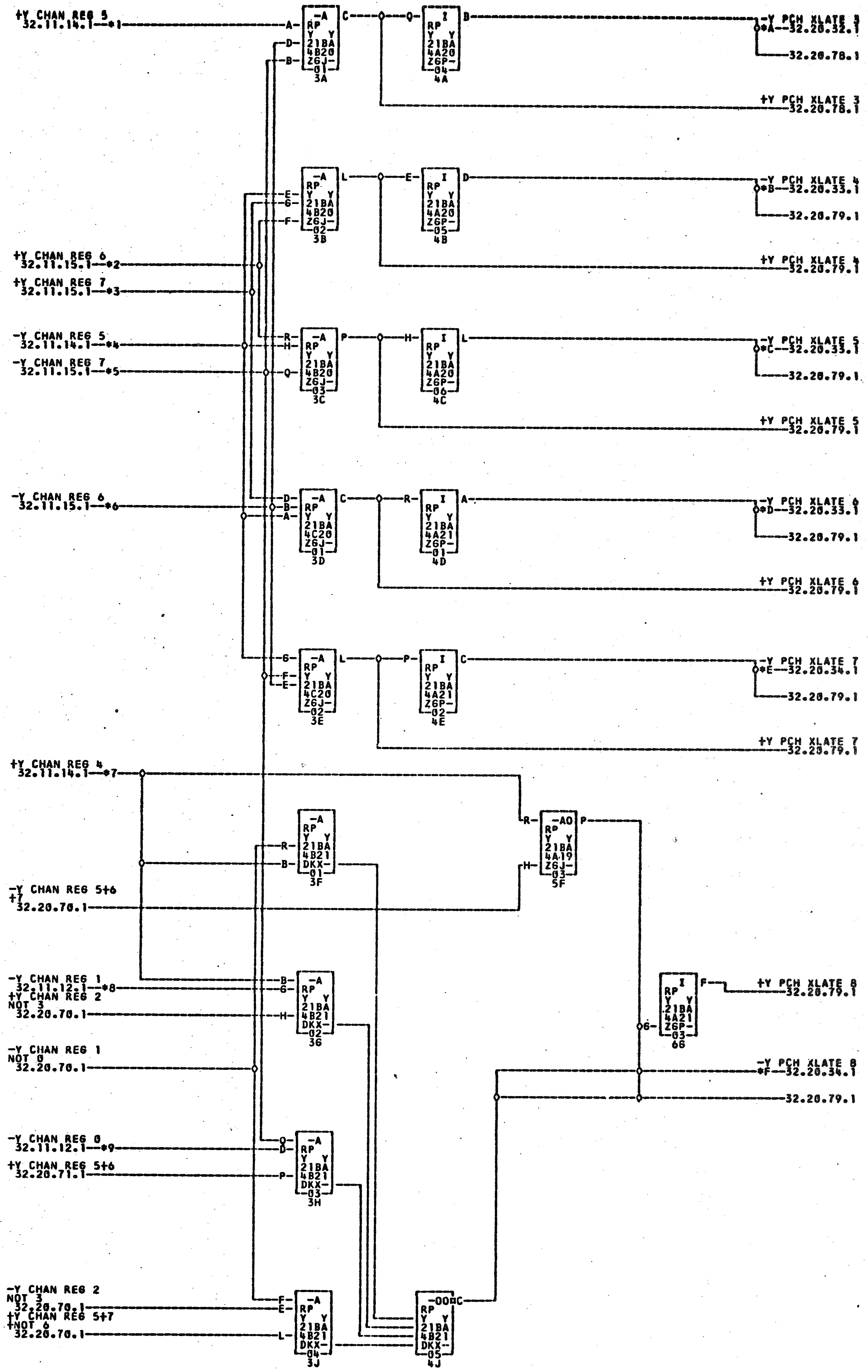
+Y CHAN REG 5 32.11.14.1—*1
+Y CHAN REG 6 32.11.15.1—*2
+Y CHAN REG 7 32.11.15.1—*3
-Y CHAN REG 5 32.11.14.1—*4
-Y CHAN REG 7 32.11.15.1—*5
-Y CHAN REG 6 32.11.15.1—*6
+Y CHAN REG 4 32.11.14.1—*7
-Y CHAN REG 5+6 +7 32.20.70.1
-Y CHAN REG 1 32.11.12.1—*8
+Y CHAN REG 2 NOT 3 32.20.70.1
-Y CHAN REG 1 NOT 0 32.20.70.1
-Y CHAN REG 0 32.11.12.1—*9
+Y CHAN REG 5+6 32.20.71.1
-Y CHAN REG 2 NOT 3 32.20.70.1
+Y CHAN REG 5+7 +NOT 6 32.20.70.1
-A RP Y Y 21BA 4B20 Z6J- 01 3A
I RP Y Y 21BA 4A20 Z6P- 04 4A
-A RP Y Y 21BA 4B20 Z6J- 02 3B
I RP Y Y 21BA 4A20 Z6P- 05 4B
-A RP Y Y 21BA 4B20 Z6J- 03 3C
I RP Y Y 21BA 4A20 Z6P- 06 4C
-A RP Y Y 21BA 4C20 Z6J- 01 3D
I RP Y Y 21BA 4A21 Z6P- 01 4D
-A RP Y Y 21BA 4C20 Z6J- 02 3E
I RP Y Y 21BA 4A21 Z6P- 02 4E
-A RP Y Y 21BA 4B21 DKX- 01 3F
-AO RP Y Y 21BA 4A19 Z6J- 03 5F
-A RP Y Y 21BA 4B21 DKX- 02 3G
I RP Y Y 21BA 4A21 Z6P- 03 6G
-A RP Y Y 21BA 4B21 DKX- 03 3H
-A RP Y Y 21BA 4B21 DKX- 04 3J
-OO C RP Y Y 21BA 4B21 DKX- 05 4J
-Y PCH XLATE 3 *A—32.20.32.1
32.20.78.1
+Y PCH XLATE 3 32.20.78.1
-Y PCH XLATE 4 *B—32.20.33.1
32.20.79.1
+Y PCH XLATE 4 32.20.79.1
-Y PCH XLATE 5 *C—32.20.33.1
32.20.79.1
+Y PCH XLATE 5 32.20.79.1
-Y PCH XLATE 6 *D—32.20.33.1
32.20.79.1
+Y PCH XLATE 6 32.20.79.1
-Y PCH XLATE 7 *E—32.20.34.1
32.20.79.1
+Y PCH XLATE 7 32.20.79.1
+Y PCH XLATE 8 32.20.79.1
-Y PCH XLATE 8 *F—32.20.34.1
32.20.79.1

*1—21B4B03F
*7—21B4B03E
———21B3C32G
———21B3C32L

*2—21B4B03G
*8—21B4B03L
*C—21B4C01H
*F—21B4C01M

*3—21B4B03H
*9—21B4B03K
———21B3C32H
———21B3C32M

*4—21B4B03Q
*A—21B4C01F
*D—21B4C01K

*5—21B4C03A
———21B3C32F
———21B3C32K

*6—21B4B03R
*B—21B4C01G
*E—21B4C01L

COMMENTS

TAG	DATE	E.C.NO.	TAG	DATE	E.C.NO.	TAG	DATE	E.C.NO.	TAG	DATE	E.C.NO.
A	09-02-64	121550M									

2-1

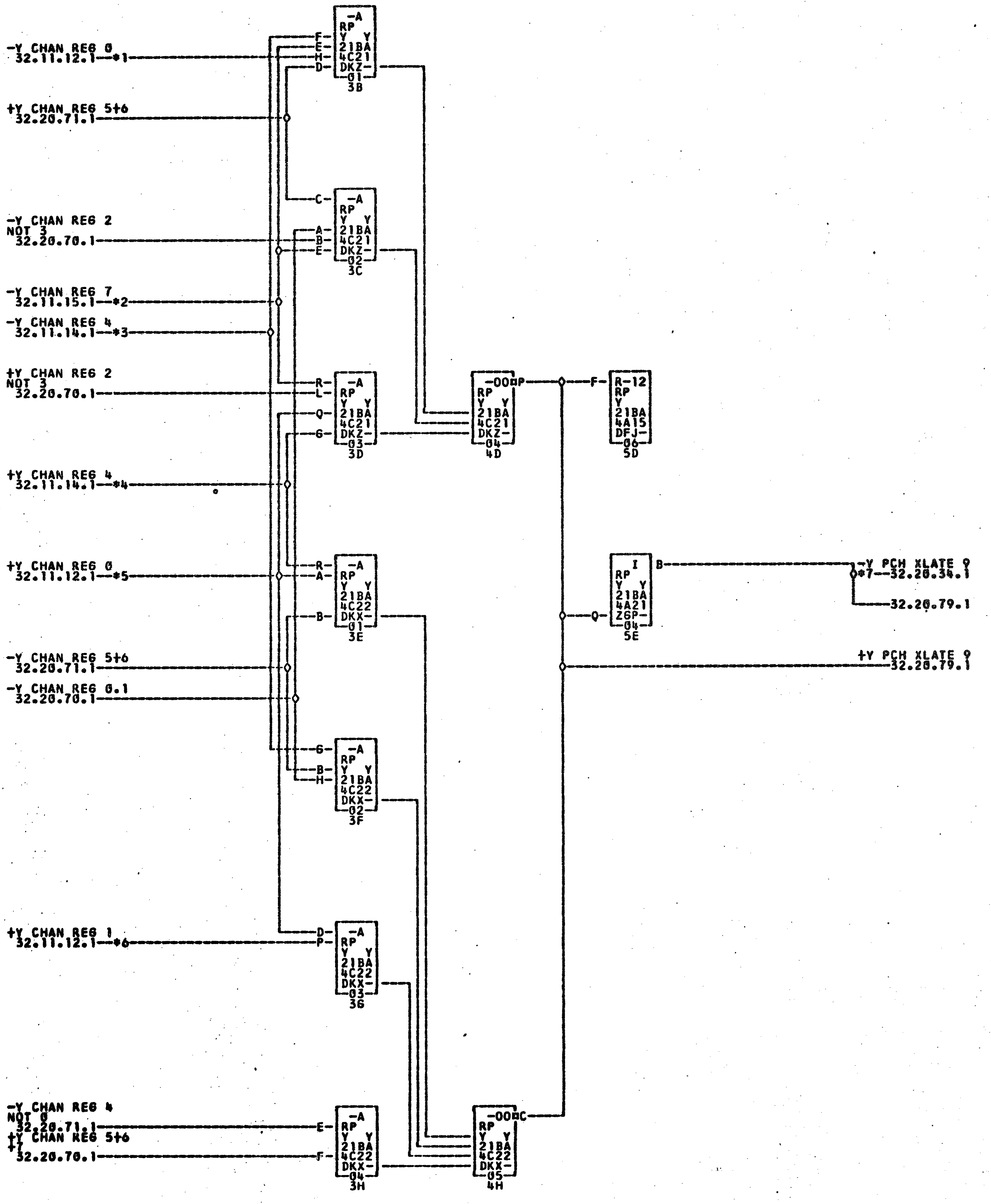
-Y CHAN REG 0
32.11.12.1--*1
+Y CHAN REG 5+6
32.20.71.1
-Y CHAN REG 2
NOT 3
32.20.70.1
-Y CHAN REG 7
32.11.15.1--*2
-Y CHAN REG 4
32.11.14.1--*3
+Y CHAN REG 2
NOT 3
32.20.70.1
+Y CHAN REG 4
32.11.14.1--*4
+Y CHAN REG 0
32.11.12.1--*5
-Y CHAN REG 5+6
32.20.71.1
-Y CHAN REG 0.1
32.20.70.1
+Y CHAN REG 1
32.11.12.1--*6
-Y CHAN REG 4
NOT 0
32.20.71.1
+Y CHAN REG 5+6
+7
32.20.70.1
F E H D
-A RP Y Y 21BA 4C21 DKZ- 01 3B
C A B E
-A RP Y Y 21BA 4C21 DKZ- 02 3C
R L Q G
-A RP Y Y 21BA 4C21 DKZ- 03 3D
R A B
-A RP Y Y 21BA 4C22 DKX- 01 3E
G B H
-A RP Y Y 21BA 4C22 DKX- 02 3F
D P
-A RP Y Y 21BA 4C22 DKX- 03 3G
E F
-A RP Y Y 21BA 4C22 DKX- 04 3H
-OO P
RP Y Y 21BA 4C21 DKZ- 04 4D
-OO C
RP Y Y 21BA 4C22 DKX- 05 4H
F
R-12 RP Y 21BA 4A15 DFJ- 06 5D
Q B
I RP Y Y 21BA 4A21 ZGP- 04 5E
-Y PCH XLATE 9
*7--32.20.34.1
32.20.79.1
+Y PCH XLATE 9
32.20.79.1

*1--21B4B03K *2--21B4C03A *3--21B4B03P *4--21B4B03E *5--21B4B03A *6--21B4B03B
*7--21B4C01N ------21B3C32N

COMMENTS

TAG	DATE	E.C.NO.	TAG	DATE	E.C.NO.	TAG	DATE	E.C.NO.	TAG	DATE	E.C.NO.
A	09-02-64	121550M									

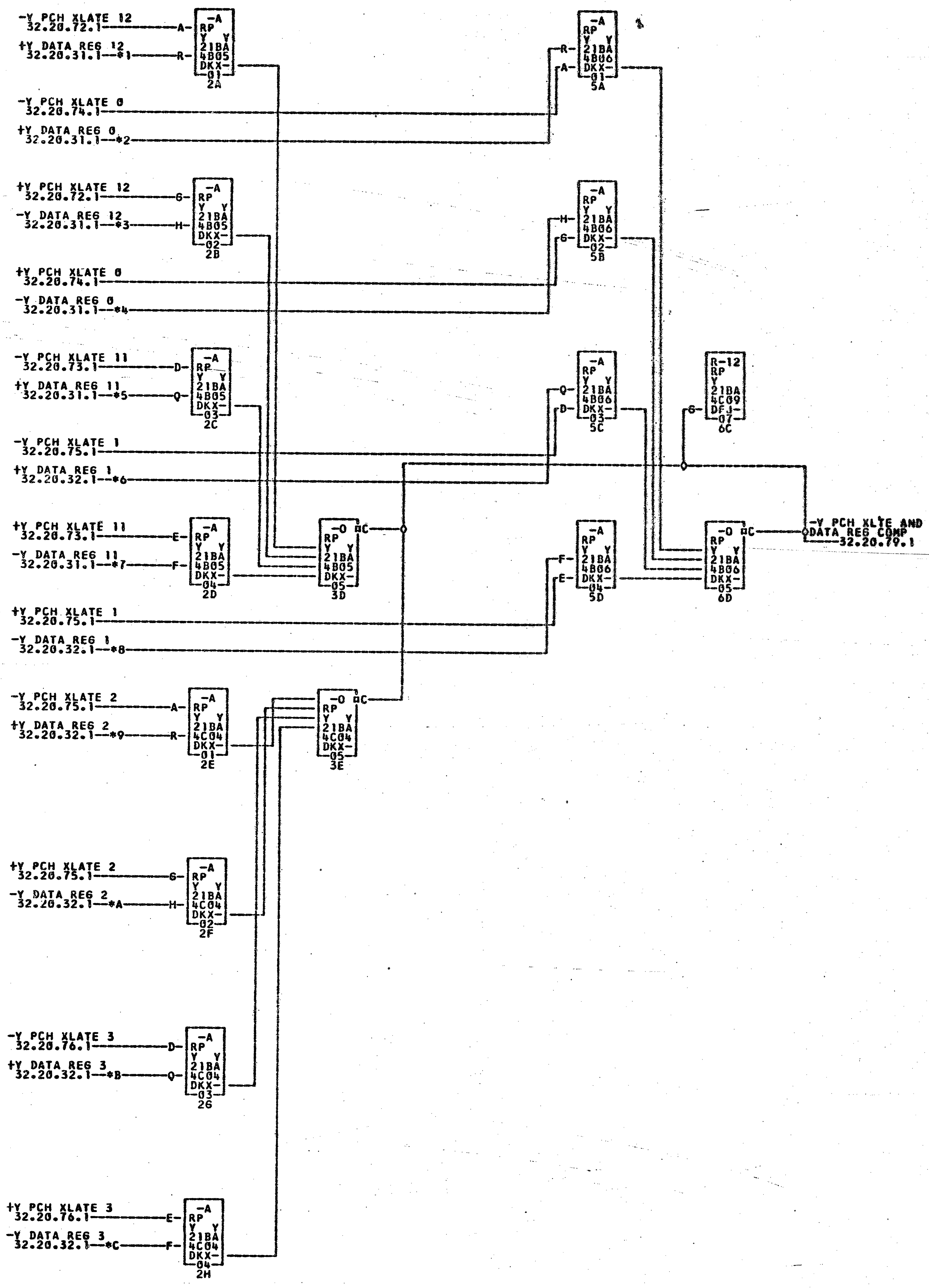
-Y PCH XLATE 12 32.20.72.1
+Y DATA REG 12 32.20.31.1—*1
-Y PCH XLATE 0 32.20.74.1
+Y DATA REG 0 32.20.31.1—*2
+Y PCH XLATE 12 32.20.72.1
-Y DATA REG 12 32.20.31.1—*3
+Y PCH XLATE 0 32.20.74.1
-Y DATA REG 0 32.20.31.1—*4
-Y PCH XLATE 11 32.20.73.1
+Y DATA REG 11 32.20.31.1—*5
-Y PCH XLATE 1 32.20.75.1
+Y DATA REG 1 32.20.32.1—*6
+Y PCH XLATE 11 32.20.73.1
-Y DATA REG 11 32.20.31.1—*7
+Y PCH XLATE 1 32.20.75.1
-Y DATA REG 1 32.20.32.1—*8
-Y PCH XLATE 2 32.20.75.1
+Y DATA REG 2 32.20.32.1—*9
+Y PCH XLATE 2 32.20.75.1
-Y DATA REG 2 32.20.32.1—*A
-Y PCH XLATE 3 32.20.76.1
+Y DATA REG 3 32.20.32.1—*B
+Y PCH XLATE 3 32.20.76.1
-Y DATA REG 3 32.20.32.1—*C
A R -A RP Y Y 21BA 4B05 DKX- 01 2A
R A -A RP Y Y 21BA 4B06 DKX- 01 5A
G H -A RP Y Y 21BA 4B05 DKX- 02 2B
H G -A RP Y Y 21BA 4B06 DKX- 02 5B
D Q -A RP Y Y 21BA 4B05 DKX- 03 2C
Q D -A RP Y Y 21BA 4B06 DKX- 03 5C
G R-12 RP Y 21BA 4C09 DFJ- 07 6C
-O RP Y Y 21BA 4B05 DKX- 05 3D C
E F -A RP Y Y 21BA 4B05 DKX- 04 2D
F E -A RP Y Y 21BA 4B06 DKX- 04 5D
-O RP Y Y 21BA 4B06 DKX- 05 6D C
-Y PCH XLTE AND DATA REG COMP 32.20.79.1
A R -A RP Y Y 21BA 4C04 DKX- 01 2E
-O RP Y Y 21BA 4C04 DKX- 05 3E C
G H -A RP Y Y 21BA 4C04 DKX- 02 2F
D Q -A RP Y Y 21BA 4C04 DKX- 03 26
E F -A RP Y Y 21BA 4C04 DKX- 04 2H

*1—21B4E026 *2—21B4E02K *3—21B4F02D *4—21B4F02F *5—21B4E02H *6—21B4E02L
*7—21B4F02E *8—21B4F026 *9—21B4E02M *A—21B4F02H *B—21B4E02N *C—21B4F02K

COMMENTS

TAG	DATE	E.C.NO.	TAG	DATE	E.C.NO.	TAG	DATE	E.C.NO.	TAG	DATE	E.C.NO.
A	09-02-64	121550M									

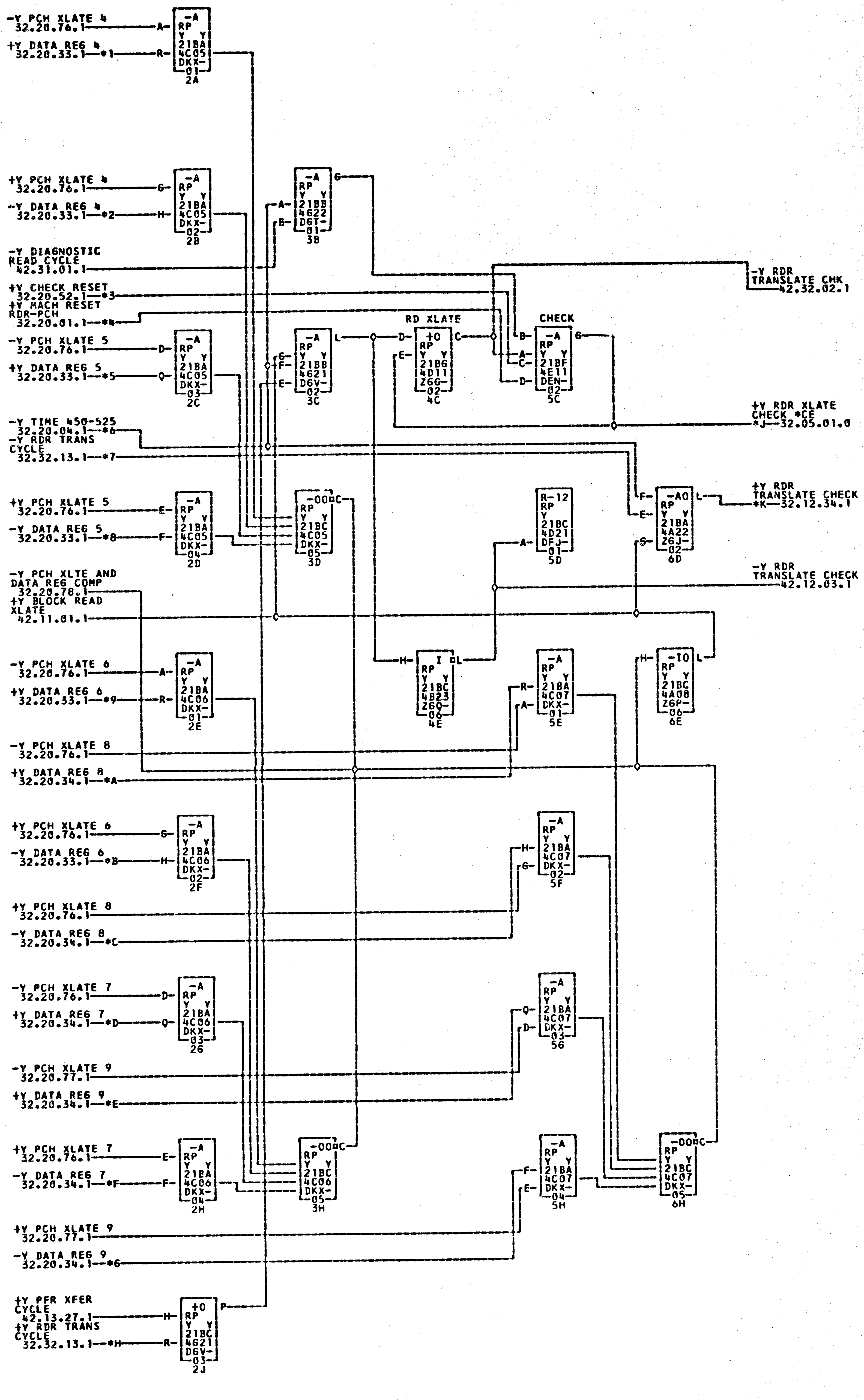
-Y PCH XLATE 4 32.20.76.1
+Y DATA REG 4 32.20.33.1—*1
-A RP Y Y 21BA 4C05 DKX- 01 2A
+Y PCH XLATE 4 32.20.76.1
-Y DATA REG 4 32.20.33.1—*2
-A RP Y Y 21BA 4C05 DKX- 02 2B
-A RP Y Y 21BB 4622 D6T- 01 3B
-Y DIAGNOSTIC READ CYCLE 42.31.01.1
+Y CHECK RESET 32.20.52.1—*3
+Y MACH RESET RDR-PCH 32.20.01.1—*4
-Y PCH XLATE 5 32.20.76.1
+Y DATA REG 5 32.20.33.1—*5
-A RP Y Y 21BA 4C05 DKX- 03 2C
-A RP Y Y 21BB 4621 D6V- 02 3C
RD XLATE
+0 RP Y Y 21B6 4D11 Z66- 02 4C
CHECK
-A RP Y Y 21BF 4E11 DEN- 02 5C
-Y RDR TRANSLATE CHK 42.32.02.1
+Y RDR XLATE CHECK *CE *J—32.05.01.0
-Y TIME 450-525 32.20.04.1—*6
-Y RDR TRANS CYCLE 32.32.13.1—*7
+Y PCH XLATE 5 32.20.76.1
-Y DATA REG 5 32.20.33.1—*8
-A RP Y Y 21BA 4C05 DKX- 04 2D
-00 RP Y Y 21BC 4C05 DKX- 05 3D
R-12 RP Y 21BC 4D21 DFJ- 01 5D
-AO RP Y Y 21BA 4A22 Z6J- 02 6D
+Y RDR TRANSLATE CHECK *K—32.12.34.1
-Y RDR TRANSLATE CHECK 42.12.03.1
-Y PCH XLTE AND DATA REG COMP 32.20.78.1
+Y BLOCK READ XLATE 42.11.01.1
-Y PCH XLATE 6 32.20.76.1
+Y DATA REG 6 32.20.33.1—*9
-A RP Y Y 21BA 4C06 DKX- 01 2E
I RP Y Y 21BC 4B23 Z60- 06 4E
-A RP Y Y 21BA 4C07 DKX- 01 5E
-IO RP Y Y 21BC 4A08 Z6P- 06 6E
-Y PCH XLATE 8 32.20.76.1
+Y DATA REG 8 32.20.34.1—*A
+Y PCH XLATE 6 32.20.76.1
-Y DATA REG 6 32.20.33.1—*B
-A RP Y Y 21BA 4C06 DKX- 02 2F
-A RP Y Y 21BA 4C07 DKX- 02 5F
+Y PCH XLATE 8 32.20.76.1
-Y DATA REG 8 32.20.34.1—*C
-Y PCH XLATE 7 32.20.76.1
+Y DATA REG 7 32.20.34.1—*D
-A RP Y Y 21BA 4C06 DKX- 03 2G
-A RP Y Y 21BA 4C07 DKX- 03 5G
-Y PCH XLATE 9 32.20.77.1
+Y DATA REG 9 32.20.34.1—*E
+Y PCH XLATE 7 32.20.76.1
-Y DATA REG 7 32.20.34.1—*F
-A RP Y Y 21BA 4C06 DKX- 04 2H
-00 RP Y Y 21BC 4C06 DKX- 05 3H
-A RP Y Y 21BA 4C07 DKX- 04 5H
-00 RP Y Y 21BC 4C07 DKX- 05 6H
+Y PCH XLATE 9 32.20.77.1
-Y DATA REG 9 32.20.34.1—*G
+Y PFR XFER CYCLE 42.13.27.1
+Y RDR TRANS CYCLE 32.32.13.1—*H
+0 RP Y Y 21BC 4621 D6V- 03 2J

*1—21B4E02P
*7—21B4A01K
*D—21B4F02A
———21B1632H

*2—21B4F02L
*8—21B4F02M
*E—21B4F02C
———21B1E01Q

*3—21B4A02M
*9—21B4E02R
*F—21B4F02P
———CERPR014

*4—21B4A02Q
*A—21B4F02B
*G—21B4F02R
*K—21B4A03B

*5—21B4E02Q
*B—21B4F02N
*H—21B4D02E
———21B1C32B

*6—21B4A01E
*C—21B4F02Q
*J—21B4E03H

MDM.3040

COMMENTS

TAG	DATE	E.C.NO.	TAG	DATE	E.C.NO.	TAG	DATE	E.C.NO.	TAG	DATE	E.C.NO.
A	09-02-64	121550M	B	11-10-64	121572	C	12-19-64	121583	D	02-15-65	121594
E	03-18-65	121598	F	08-18-65	124270	G	11-18-65	125601			

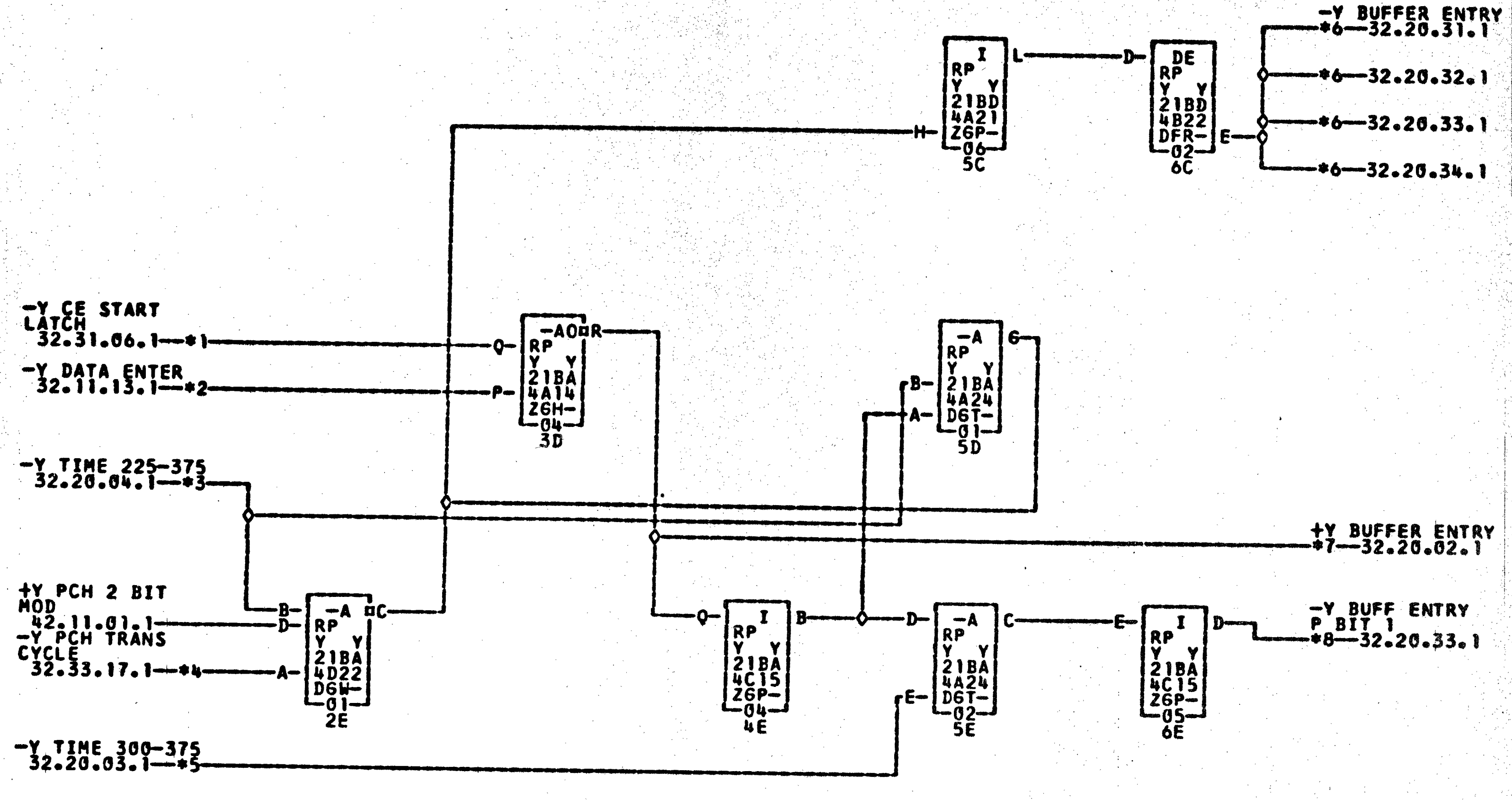
-Y CE START LATCH
32.31.06.1—*1
-Y DATA ENTER
32.11.13.1—*2
-Y TIME 225-375
32.20.04.1—*3
+Y PCH 2 BIT MOD
42.11.01.1
-Y PCH TRANS CYCLE
32.33.17.1—*4
-Y TIME 300-375
32.20.03.1—*5
-A RP Y Y 21BA 4D22 D6W- 01 2E
-A0 RP Y Y 21BA 4A14 Z6H- 04 3D
I RP Y Y 21BD 4A21 Z6P- 06 5C
DE RP Y Y 21BD 4B22 DFR- 02 6C
-A RP Y Y 21BA 4A24 D6T- 01 5D
I RP Y Y 21BA 4C15 Z6P- 04 4E
-A RP Y Y 21BA 4A24 D6T- 02 5E
I RP Y Y 21BA 4C15 Z6P- 05 6E
-Y BUFFER ENTRY
*6—32.20.31.1
*6—32.20.32.1
*6—32.20.33.1
*6—32.20.34.1
+Y BUFFER ENTRY
*7—32.20.02.1
-Y BUFF ENTRY P BIT 1
*8—32.20.33.1

*1—21B4A01C
—21B3C32Q

*2—21B4C036
*7—21B4C01R

*3—21B4A01F
—21B3C32R

*4—21B4A03Q
*8—21B4E02E

*5—21B4E02C
—21B3632E

*6—21B4C01Q

COMMENTS

TAG	DATE	E.C.NO.	TAG	DATE	E.C.NO.	TAG	DATE	E.C.NO.	TAG	DATE	E.C.NO.
A	09-02-64	121550M	B	10-16-64	121567	C	12-19-64	121583	D	02-15-65	121594

2-1

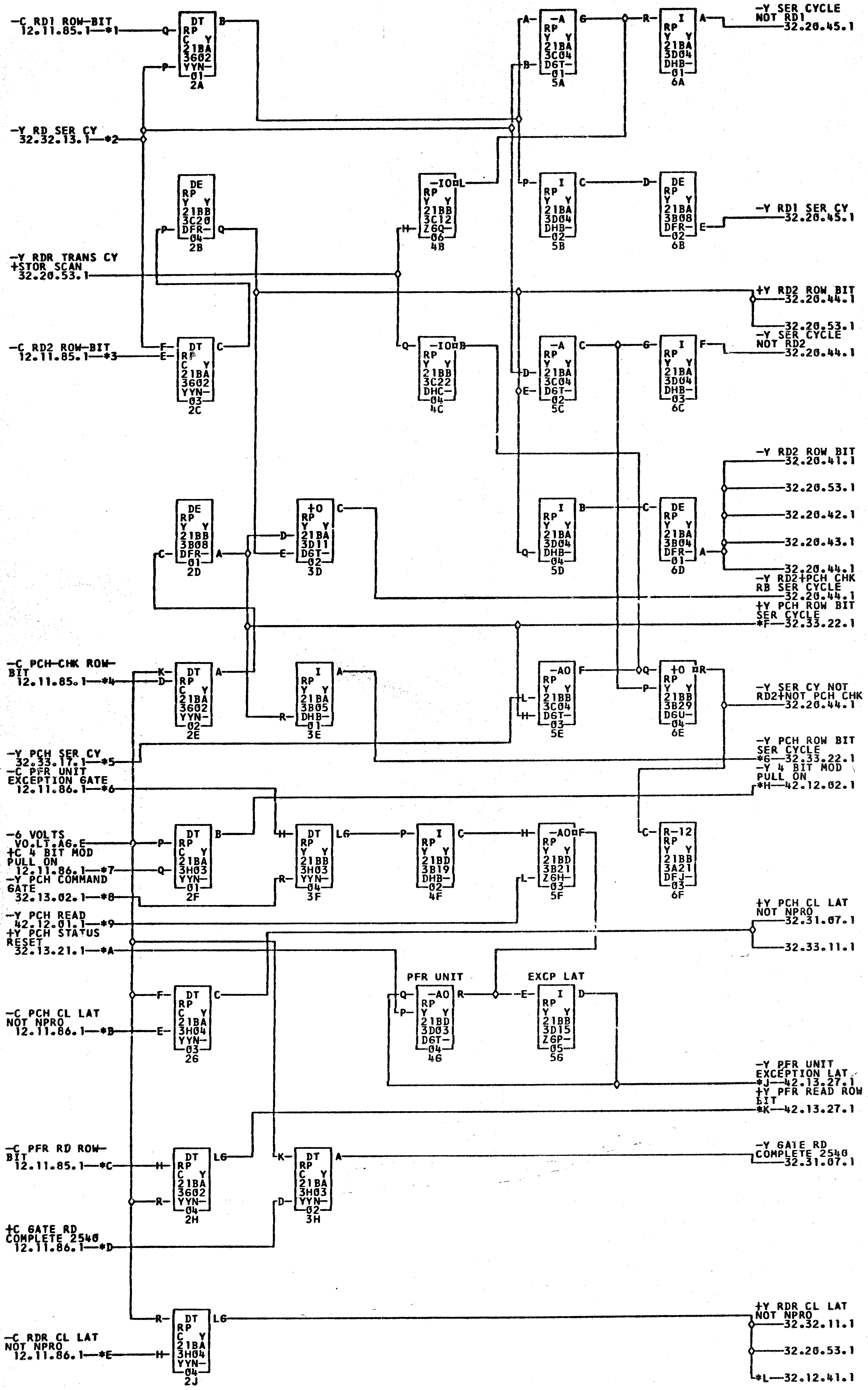
-C RD1 ROW-BIT 12.11.85.1—*1
-Y RD SER CY 32.32.13.1—*2
-Y RDR TRANS CY +STOR SCAN 32.20.53.1
-C RD2 ROW-BIT 12.11.85.1—*3
-C PCH-CHK ROW-BIT 12.11.85.1—*4
-Y PCH SER CY 32.33.17.1—*5
-C PFR UNIT EXCEPTION GATE 12.11.86.1—*6
-6 VOLTS V0.LT.A6.E
+C 4 BIT MOD PULL ON 12.11.86.1—*7
-Y PCH COMMAND GATE 32.13.02.1—*8
-Y PCH READ 42.12.01.1—*9
+Y PCH STATUS RESET 32.13.21.1—*A
-C PCH CL LAT NOT NPRO 12.11.86.1—*B
-C PFR RD ROW-BIT 12.11.85.1—*C
+C GATE RD COMPLETE 2540 12.11.86.1—*D
-C RDR CL LAT NOT NPRO 12.11.86.1—*E
DT RP C Y 21BA 3602 YYN- 01 2A
DE RP Y Y 21BB 3C20 DFR- 04 2B
DT RP C Y 21BA 3602 YYN- 03 2C
DE RP Y Y 21BB 3B08 DFR- 01 2D
DT RP C Y 21BA 3602 YYN- 02 2E
DT RP C Y 21BA 3H03 YYN- 01 2F
DT RP C Y 21BA 3H04 YYN- 03 2G
DT RP C Y 21BA 3602 YYN- 04 2H
DT RP C Y 21BA 3H04 YYN- 04 2J
+O RP Y Y 21BA 3D11 D6T- 02 3D
I RP Y Y 21BA 3B05 DHB- 01 3E
DT RP Y Y 21BB 3H03 YYN- 04 3F
DT RP C Y 21BA 3H03 YYN- 02 3H
-IO RP Y Y 21BB 3C12 Z6Q- 06 4B
-IO RP Y Y 21BB 3C22 DHC- 04 4C
I RP Y Y 21BD 3B19 DHB- 02 4F
PFR UNIT
-AO RP Y Y 21BD 3D03 D6T- 04 4G
-A RP Y Y 21BA 3C04 D6T- 01 5A
I RP Y Y 21BA 3D04 DHB- 02 5B
-A RP Y Y 21BA 3C04 D6T- 02 5C
I RP Y Y 21BA 3D04 DHB- 04 5D
-AO RP Y Y 21BB 3C04 D6T- 03 5E
-AO RP Y Y 21BD 3B21 Z6H- 03 5F
EXCP LAT
I RP Y Y 21BB 3D15 Z6P- 05 5G
I RP Y Y 21BA 3D04 DHB- 01 6A
DE RP Y Y 21BA 3B08 DFR- 02 6B
I RP Y Y 21BA 3D04 DHB- 03 6C
DE RP Y Y 21BA 3B04 DFR- 01 6D
+O RP Y Y 21BB 3B29 D6U- 04 6E
R-12 RP Y Y 21BB 3A21 DFJ- 03 6F
-Y SER CYCLE NOT RD1 32.20.45.1
-Y RD1 SER CY 32.20.45.1
+Y RD2 ROW BIT 32.20.44.1
32.20.53.1
-Y SER CYCLE NOT RD2 32.20.44.1
-Y RD2 ROW BIT 32.20.41.1
32.20.53.1
32.20.42.1
32.20.43.1
32.20.44.1
-Y RD2+PCH CHK RB SER CYCLE 32.20.44.1
+Y PCH ROW BIT SER CYCLE *F—32.33.22.1
-Y SER CY NOT RD2+NOT PCH CHK 32.20.44.1
-Y PCH ROW BIT SER CYCLE *G—32.33.22.1
-Y 4 BIT MOD PULL ON *H—42.12.02.1
+Y PCH CL LAT NOT NPRO 32.31.07.1
32.33.11.1
-Y PFR UNIT EXCEPTION LAT *J—42.13.27.1
+Y PFR READ ROW BIT *K—42.13.27.1
-Y GATE RD COMPLETE 2540 32.31.07.1
+Y RDR CL LAT NOT NPRO 32.32.11.1
32.20.53.1
*L—32.12.41.1

*1—21B3E01A
———40A1C01B
———21C1C23P
*9—21B3A31P
———21C1C24D
———21C1C23A
*H—21B3E32Q
*L—21B3A01P

———21C1C24A
*4—21B3E01C
———40A1C02P
*A—21B3T32B
———40A1C01D
———40A1C02A
———21B4E01Q
———21B1D01P

———40A1C01A
———21C1C24C
*7—21B3F01M
*B—21B3F01B
*D—21B3F01C
*F—21B3T08C
*J—21B3A31E

*2—21B3T19D
———40A1C01C
———21C1C23M
———21C1C23B
———21C1C23C
———21B1T08C
———21B4A02E

*3—21B3E01B
*5—21B3T20A
———40A1C02M
———40A1C02B
———40A1C02C
*6—21B3T08D
*K—21B3E32P

———21C1C24B
*6—21B3F01P
*8—21B3A01H
*C—21B3E01D
*E—21B3F01A
———21B1T08D
———21B4E01P

COMMENTS
MDM.4020-5021-5421

TAG	DATE	E.C.NO.	TAG	DATE	E.C.NO.	TAG	DATE	E.C.NO.	TAG	DATE	E.C.NO.
A	09-01-64	121550L	B	10-15-64	121567	C	11-10-64	121572	D	02-15-65	121594
E	03-18-65	121598	F	05-26-65	124248	G	04-28-66	125637	H	03-10-67	125658

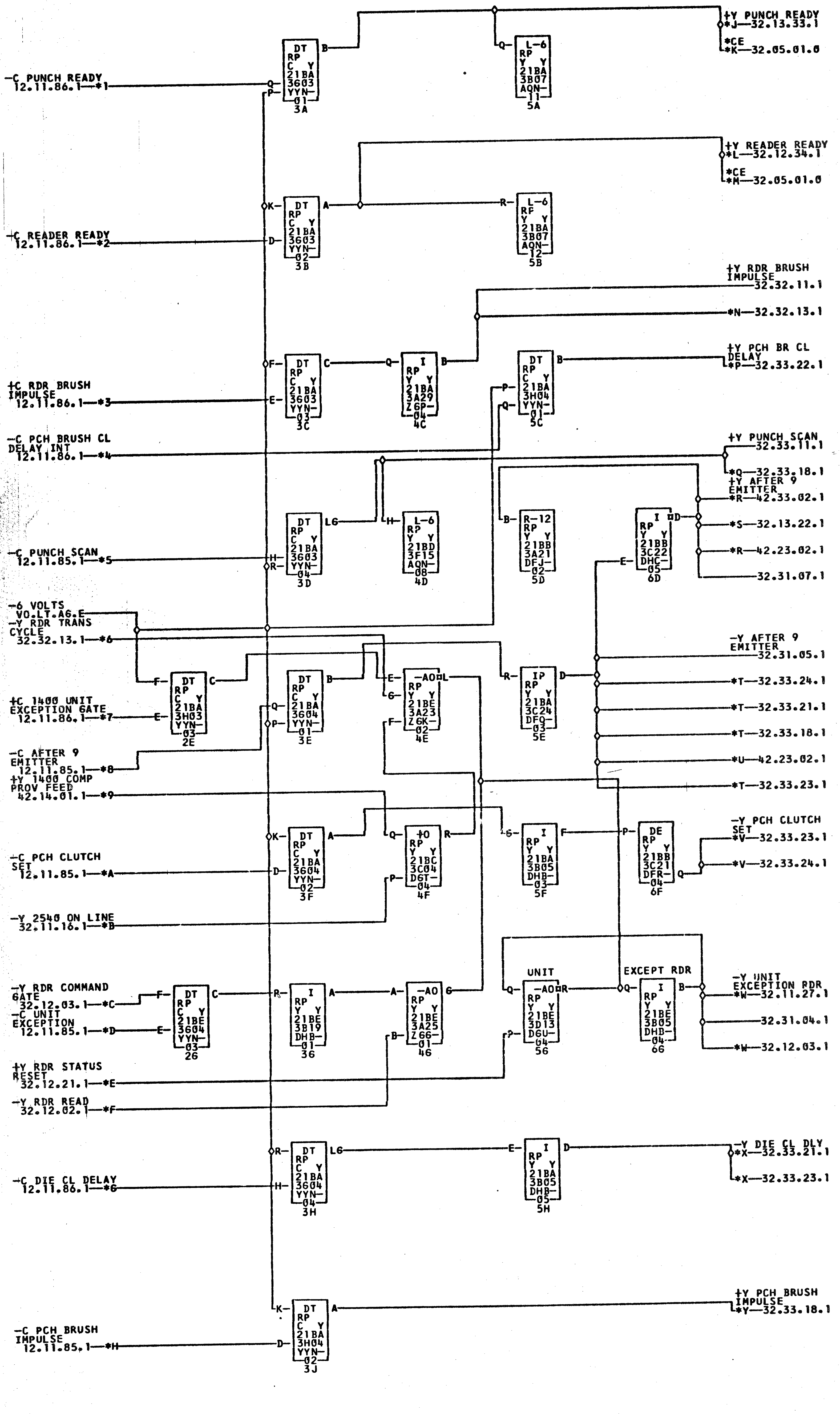
-C PUNCH READY
12.11.86.1—*1
DT RP C Y 21BA 3603 YYN- 01 3A
L-6 RP Y Y 21BA 3B07 AQN- 11 5A
+Y PUNCH READY
*J—32.13.33.1
*CE
*K—32.05.01.0
+C READER READY
12.11.86.1—*2
DT RP C Y 21BA 3603 YYN- 02 3B
L-6 RP Y Y 21BA 3B07 AQN- 12 5B
+Y READER READY
*L—32.12.34.1
*CE
*M—32.05.01.0
+Y RDR BRUSH IMPULSE
32.32.11.1
*N—32.32.13.1
+C RDR BRUSH IMPULSE
12.11.86.1—*3
DT RP C Y 21BA 3603 YYN- 03 3C
I RP Y Y 21BA 3A29 Z6P- 04 4C
DT RP C Y 21BA 3H04 YYN- 01 5C
+Y PCH BR CL DELAY
*P—32.33.22.1
-C PCH BRUSH CL DELAY INT
12.11.86.1—*4
+Y PUNCH SCAN
32.33.11.1
*Q—32.33.18.1
+Y AFTER 9 EMITTER
*R—42.33.02.1
*S—32.13.22.1
*R—42.23.02.1
32.31.07.1
-C PUNCH SCAN
12.11.85.1—*5
DT RP C Y 21BA 3603 YYN- 04 3D
L-6 RP Y Y 21BD 3F15 AQN- 08 4D
R-12 RP Y Y 21BB 3A21 DFJ- 02 5D
I RP Y Y 21BB 3C22 DHC- 05 6D
-6 VOLTS
VO.LT.A6.E
-Y RDR TRANS CYCLE
32.32.13.1—*6
DT RP C Y 21BA 3H03 YYN- 03 2E
DT RP C Y 21BA 3604 YYN- 01 3E
-AO RP Y Y 21BE 3A23 Z6K- 02 4E
IP RP Y Y 21BA 3C24 DFQ- 03 5E
-Y AFTER 9 EMITTER
32.31.05.1
*T—32.33.24.1
*T—32.33.21.1
*T—32.33.18.1
*U—42.23.02.1
*T—32.33.23.1
+C 1400 UNIT EXCEPTION GATE
12.11.86.1—*7
-C AFTER 9 EMITTER
12.11.85.1—*8
+Y 1400 COMP PROV FEED
42.14.01.1—*9
DT RP C Y 21BA 3604 YYN- 02 3F
+0 RP Y Y 21BC 3C04 D6T- 04 4F
I RP Y Y 21BA 3B05 DHB- 03 5F
DE RP Y Y 21BB 3C21 DFR- 04 6F
-Y PCH CLUTCH SET
*V—32.33.23.1
*V—32.33.24.1
-C PCH CLUTCH SET
12.11.85.1—*A
-Y 2540 ON LINE
32.11.16.1—*B
-Y RDR COMMAND GATE
32.12.03.1—*C
-C UNIT EXCEPTION
12.11.85.1—*D
DT RP C Y 21BE 3604 YYN- 03 2G
I RP Y Y 21BE 3B19 DHB- 01 3G
-AO RP Y Y 21BE 3A25 Z66- 01 4G
UNIT
-AO RP Y Y 21BE 3D13 D6U- 04 5G
EXCEPT RDR
I RP Y Y 21BE 3B05 DHD- 04 6G
-Y UNIT EXCEPTION RDR
*W—32.11.27.1
32.31.04.1
*W—32.12.03.1
+Y RDR STATUS RESET
32.12.21.1—*E
-Y RDR READ
32.12.02.1—*F
-C DIE CL DELAY
12.11.86.1—*G
DT RP C Y 21BA 3604 YYN- 04 3H
I RP Y Y 21BA 3B05 DHB- 05 5H
-Y DIE CL DLY
*X—32.33.21.1
*X—32.33.23.1
+Y PCH BRUSH IMPULSE
*Y—32.33.18.1
-C PCH BRUSH IMPULSE
12.11.85.1—*H
DT RP C Y 21BA 3H04 YYN- 02 3J

*1—21B3F01F
*3—21B3F01H
*5—21B3E01E
—40A1C02K
—21C1C246
—40A1C01H
*H—21B3E01K
—CERPA056
—21B1T09C
—21B4A01P
—21B4A01N
—21B1T11B

—21C1C23F
—21C1C23H
—21C1C24E
*8—21B3E01F
—40A1C016
*E—21B3T30D
—21C1C24K
*L—21B3T09B
*P—21B3T09D
*S—21B3T29C
*V—21B3T10D
*Y—21B3T11C

—40A1C02F
—40A1C02H
—40A1C01E
—21C1C24F
*B—21B3T24D
*F—21B3A016
—40A1C01K
—21B1T09B
—21B1T09D
—21B1T29C
—21B1T10D
—21B1T11C

*2—21B3F016
*4—21B3F01D
*6—21B3T20D
—40A1C01F
*C—21B3A01F
*G—21B3F01E
*J—21B3T09A
*M—21B3C03Q
*Q—21B3T10A
*T—21B3T10C
*W—21B3T11A

—21C1C23G
—21C1C23D
*7—21B3F01K
*9—21B3F32H
*D—21B3E01H
—21C1C23E
—21B1T09A
—CERPA041
—21B1T10A
—21B1T10C
—21B1T11A

—40A1C026
—40A1C02D
—21C1C23K
*A—21B3E016
—21C1C24H
—40A1C02E
*K—21B3C03P
*N—21B3T09C
*R—21B3A32P
*U—21B3A32N
*X—21B3T11B

MDM.5041-5441

COMMENTS

TAG	DATE	E.C.NO.	TAG	DATE	E.C.NO.	TAG	DATE	E.C.NO.	TAG	DATE	E.C.NO.
A	09-01-64	121550L	B	10-15-64	121567	C	11-10-64	121572	D	12-19-64	121583
E	02-15-65	121594	F	06-22-65	124265	G	10-11-65	125598	H	04-28-66	125637
J	03-10-67	125658									

0826682 SIGNAL LINES ICU TO RDR PCH NO. 1 2821 32.31.04.1

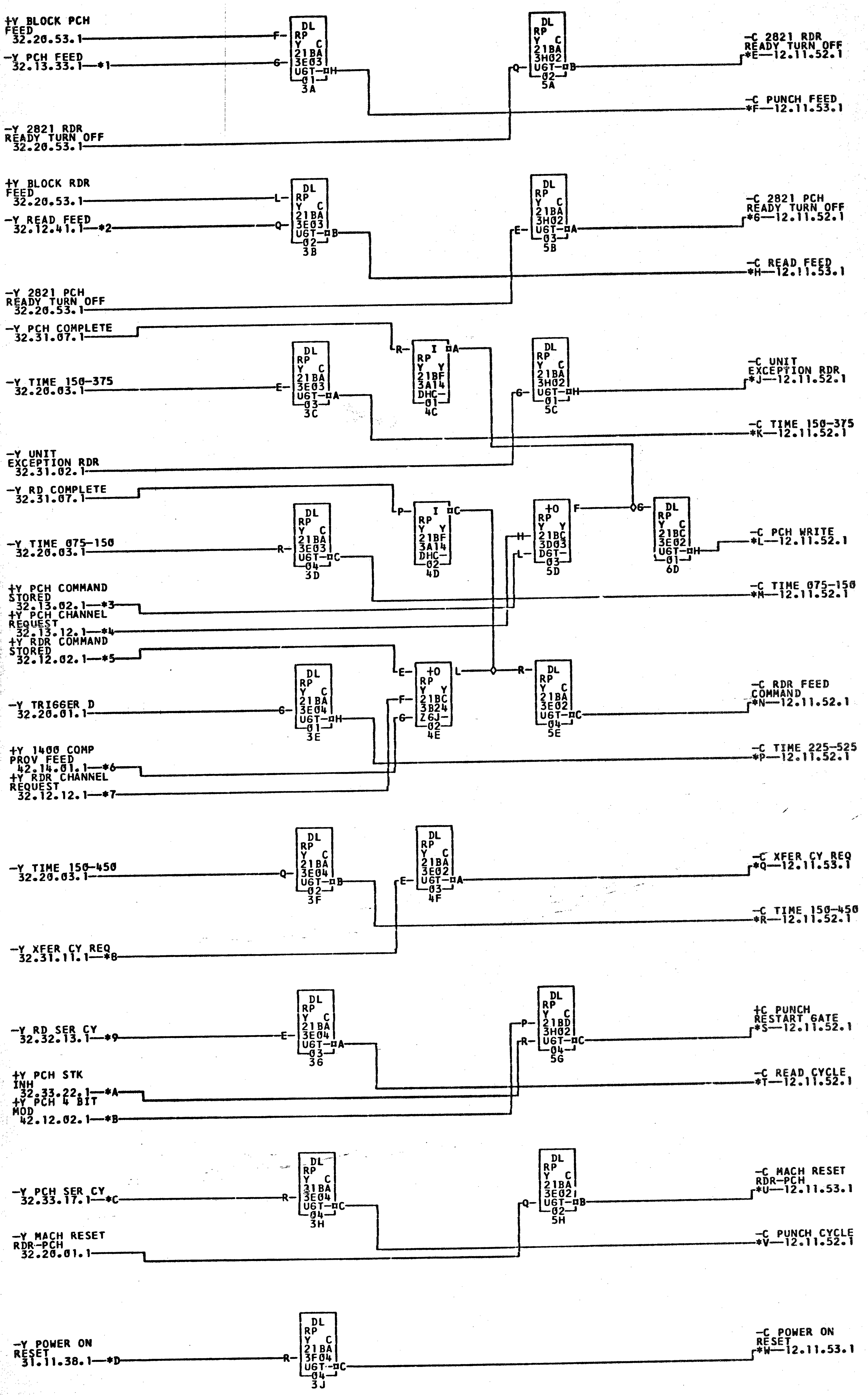
+Y BLOCK PCH FEED 32.20.53.1
-Y PCH FEED 32.13.33.1—*1
-Y 2821 RDR READY TURN OFF 32.20.53.1
DL RP Y C 21BA 3E03 UGT 01 3A
DL RP Y C 21BA 3H02 UGT 02 5A
-C 2821 RDR READY TURN OFF *E—12.11.52.1
-C PUNCH FEED *F—12.11.53.1
+Y BLOCK RDR FEED 32.20.53.1
-Y READ FEED 32.12.41.1—*2
-Y 2821 PCH READY TURN OFF 32.20.53.1
DL RP Y C 21BA 3E03 UGT 02 3B
DL RP Y C 21BA 3H02 UGT 03 5B
-C 2821 PCH READY TURN OFF *6—12.11.52.1
-C READ FEED *H—12.11.53.1
-Y PCH COMPLETE 32.31.07.1
-Y TIME 150-375 32.20.03.1
DL RP Y C 21BA 3E03 UGT 03 3C
I RP Y Y 21BF 3A14 DHC 01 4C
DL RP Y C 21BA 3H02 UGT 01 5C
-C UNIT EXCEPTION RDR *J—12.11.52.1
-C TIME 150-375 *K—12.11.52.1
-Y UNIT EXCEPTION RDR 32.31.02.1
-Y RD COMPLETE 32.31.07.1
-Y TIME 075-150 32.20.03.1
DL RP Y C 21BA 3E03 UGT 04 3D
I RP Y Y 21BF 3A14 DHC 02 4D
+O RP Y Y 21BC 3D03 DGT 03 5D
DL RP Y C 21BC 3E02 UGT 01 6D
-C PCH WRITE *L—12.11.52.1
-C TIME 075-150 *M—12.11.52.1
+Y PCH COMMAND STORED 32.13.02.1—*3
+Y PCH CHANNEL REQUEST 32.13.12.1—*4
+Y RDR COMMAND STORED 32.12.02.1—*5
-Y TRIGGER D 32.20.01.1
DL RP Y C 21BA 3E04 UGT 01 3E
+O RP Y Y 21BC 3B24 Z6J 02 4E
DL RP Y C 21BA 3E02 UGT 04 5E
-C RDR FEED COMMAND *N—12.11.52.1
-C TIME 225-525 *P—12.11.52.1
+Y 1400 COMP PROV FEED 42.14.01.1—*6
+Y RDR CHANNEL REQUEST 32.12.12.1—*7
-Y TIME 150-450 32.20.03.1
DL RP Y C 21BA 3E04 UGT 02 3F
DL RP Y C 21BA 3E02 UGT 03 4F
-C XFER CY REQ *Q—12.11.53.1
-C TIME 150-450 *R—12.11.52.1
-Y XFER CY REQ 32.31.11.1—*8
-Y RD SER CY 32.32.13.1—*9
DL RP Y C 21BA 3E04 UGT 03 3G
DL RP Y C 21BD 3H02 UGT 04 5G
+C PUNCH RESTART GATE *S—12.11.52.1
-C READ CYCLE *T—12.11.52.1
+Y PCH STK INH 32.33.22.1—*A
+Y PCH 4 BIT MOD 42.12.02.1—*B
-Y PCH SER CY 32.33.17.1—*C
DL RP Y C 31BA 3E04 UGT 04 3H
DL RP Y C 21BA 3E02 UGT 02 5H
-C MACH RESET RDR-PCH *U—12.11.53.1
-Y MACH RESET RDR-PCH 32.20.01.1
-C PUNCH CYCLE *V—12.11.52.1
-Y POWER ON RESET 31.11.38.1—*D
DL RP Y C 21BA 3F04 UGT 04 3J
-C POWER ON RESET *W—12.11.53.1
F G H Q B L Q B E A R A G H E C P C H L F G E F G L R C G H Q B E A E A P R C R C Q B R C

*1—21B3T20B
*7—21B3A01A
*D—21B3T26C
——40A1C01M
——40A1C01L
——40A1C01R
——40A1C01Q
——40A1C03Q
——40A1C03P
——40A1C03N
——40A1C03M

*2—21B3T20C
*8—21B3T29A
*E—21B3H01K
*6—21B3H01L
*J—21B3F01N
*L—21B3F01Q
*N—21B3F01R
*Q—21B3F01L
*S—21B3H01Q
*U—21B3E01P
*W—21B3E01N

*3—21B3T31A
*9—21B3T19D
——21C1C21K
——21C1C21L
——21C1C23N
——21C1C23Q
——21C1C23R
——21C1C23L
——21C1C21Q
——21C1C24P
——21C1C24N

*4—21B3A01B
*A—21B3T25B
——40A1C04K
——40A1C04L
——4JA1C02N
——40A1C02Q
——40A1C02R
——40A1C02L
——40A1C04Q
——40A1C01P
——40A1C01N

*5—21B3T31B
*B—21B3D32R
*F—21B3E01M
*H—21B3E01L
*K—21B3E01R
*M—21B3E01Q
*P—21B3G01Q
*R—21B3G01P
*T—21B3G01N
*V—21B3G01M

*6—21B3F32H
*C—21B3T20A
——21C1C24M
——21C1C24L
——21C1C24R
——21C1C24Q
——21C1C22Q
——21C1C22P
——21C1C22N
——21C1C22M

COMMENTS
MDM.4020-4041-5041-5061

TAG	DATE	E.C.NO.	TAG	DATE	E.C.NO.	TAG	DATE	E.C.NO.	TAG	DATE	E.C.NO.
A	09-01-64	121550L	B	10-15-64	121567	C	11-10-64	121572	D	12-19-64	121583
E	02-15-65	121594	F	11-19-65	125601	6	04-28-66	125637	H	03-10-67	125658

LAST ADDR AND CHECK PLANE CTRL

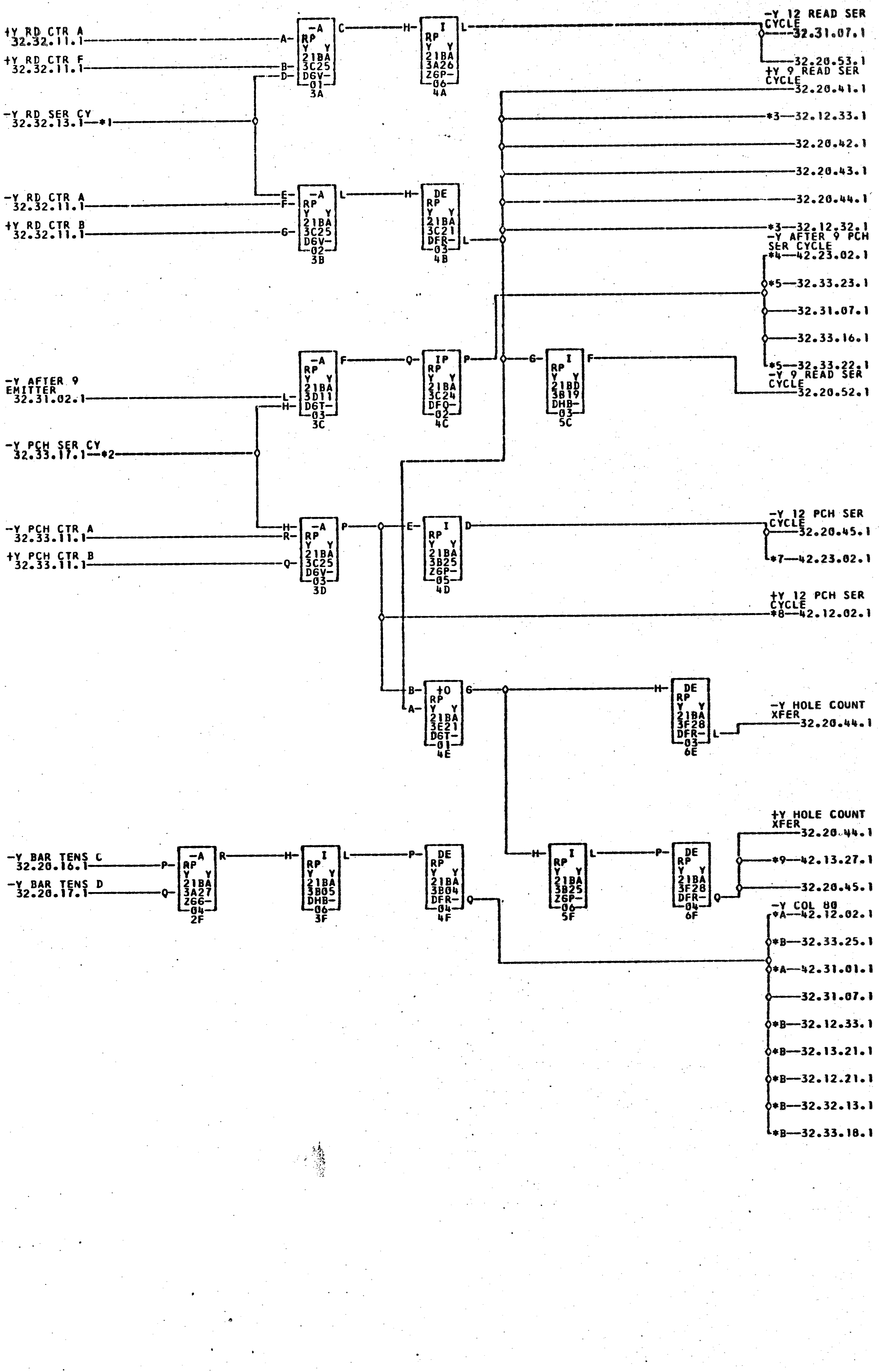
+Y RD CTR A 32.32.11.1
+Y RD CTR F 32.32.11.1
-Y RD SER CY 32.32.13.1—*1
-Y RD CTR A 32.32.11.1
+Y RD CTR B 32.32.11.1
-Y AFTER 9 EMITTER 32.31.02.1
-Y PCH SER CY 32.33.17.1—*2
-Y PCH CTR A 32.33.11.1
+Y PCH CTR B 32.33.11.1
-Y BAR TENS C 32.20.16.1
-Y BAR TENS D 32.20.17.1
-A RP Y Y 21BA 3C25 D6V- -01- 3A
I RP Y Y 21BA 3A26 Z6P- -06- 4A
-A RP Y Y 21BA 3C25 D6V- -02- 3B
DE RP Y Y 21BA 3C21 DFR- -03- 4B
-A RP Y Y 21BA 3D11 D6T- -03- 3C
IP RP Y Y 21BA 3C24 DFQ- -02- 4C
I RP Y Y 21BD 3B19 DHB- -03- 5C
-A RP Y Y 21BA 3C25 D6V- -03- 3D
I RP Y Y 21BA 3B25 Z6P- -05- 4D
+O RP Y Y 21BA 3E21 D6T- -01- 4E
DE RP Y Y 21BA 3F28 DFR- -03- 6E
-A RP Y Y 21BA 3A27 Z66- -04- 2F
I RP Y Y 21BA 3B05 DHB- -06- 3F
DE RP Y Y 21BA 3B04 DFR- -04- 4F
I RP Y Y 21BA 3B25 Z6P- -06- 5F
DE RP Y Y 21BA 3F28 DFR- -04- 6F
-Y 12 READ SER CYCLE 32.31.07.1
32.20.53.1
+Y 9 READ SER CYCLE 32.20.41.1
*3—32.12.33.1
32.20.42.1
32.20.43.1
32.20.44.1
*3—32.12.32.1
-Y AFTER 9 PCH SER CYCLE *4—42.23.02.1
*5—32.33.23.1
32.31.07.1
32.33.16.1
*5—32.33.22.1
-Y 9 READ SER CYCLE 32.20.52.1
-Y 12 PCH SER CYCLE 32.20.45.1
*7—42.23.02.1
+Y 12 PCH SER CYCLE *8—42.12.02.1
-Y HOLE COUNT XFER 32.20.44.1
+Y HOLE COUNT XFER 32.20.44.1
*9—42.13.27.1
32.20.45.1
-Y COL 80 *A—42.12.02.1
*B—32.33.25.1
*A—42.31.01.1
32.31.07.1
*B—32.12.33.1
*B—32.13.21.1
*B—32.12.21.1
*B—32.32.13.1
*B—32.33.18.1

*1—21B3T19D   *2—21B3T20A   *3—21B3T12A   ——21B1T12A   *4—21B3A31A   ——21B4A02A
*5—21B3T12C   ——21B1T12C   *7—21B3A32M   ——21B4A01M   *8—21B3F32A   ——21B4F01A
*9—21B3B32P   ——21B4B01P   *A—21B3B32R   ——21B4B01R   *B—21B3T13A   ——21B1T13A

FSD. 405

COMMENTS

TAG	DATE	E.C.NO.	TAG	DATE	E.C.NO.	TAG	DATE	E.C.NO.	TAG	DATE	E.C.NO.
A	09-01-64	121550L	B	10-15-64	121567	C	12-19-64	121583	D	03-18-65	121598

0826684

CE START LATCH

2821 32.31.06.1

2-4

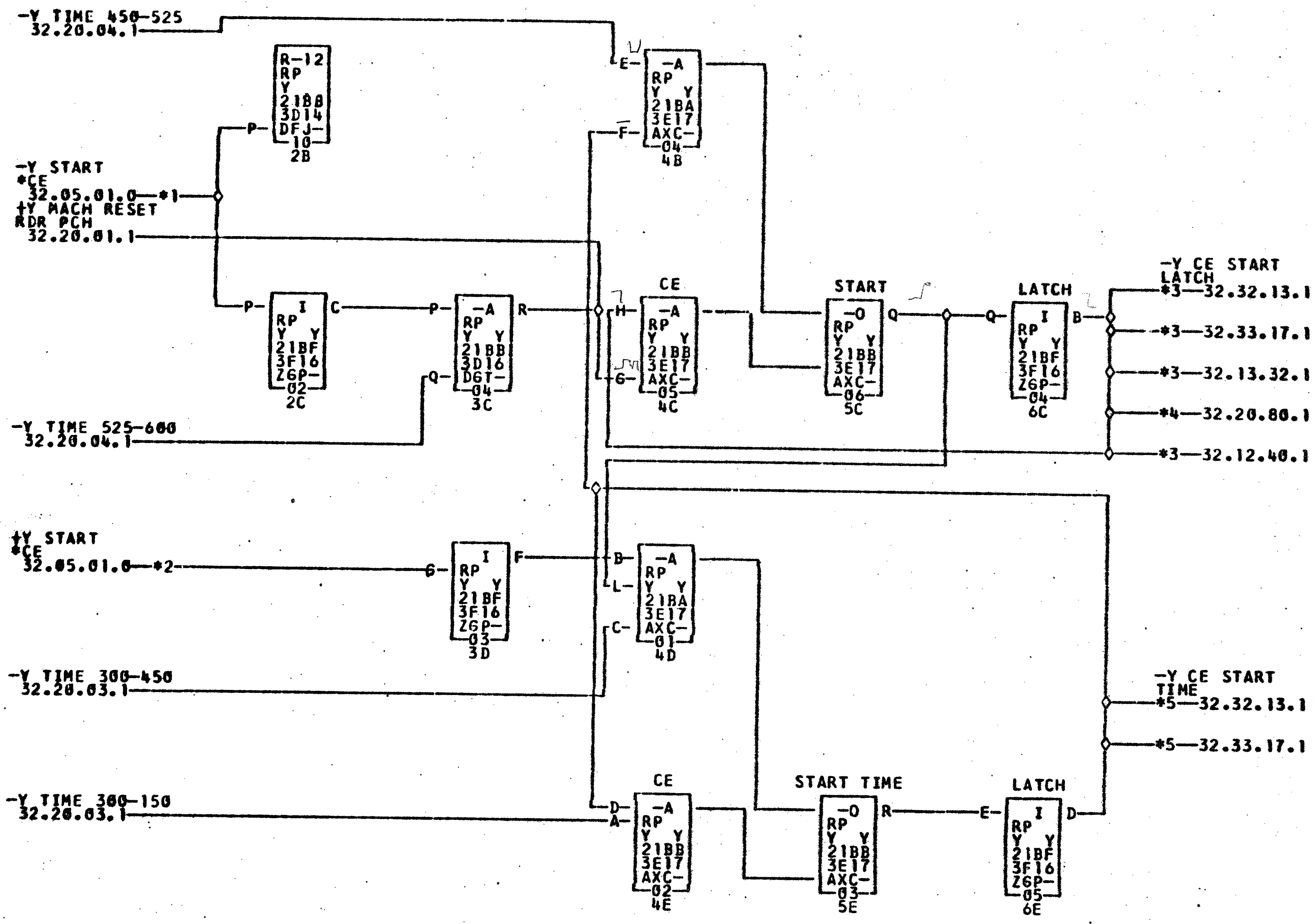
-Y TIME 450-525
32.20.04.1
R-12 RP Y 21BB 3D14 DFJ- 10 2B
-Y START
*CE
32.05.01.0—*1
+Y MACH RESET
RDR PCH
32.20.01.1
P
I RP Y Y 21BF 3F16 Z6P- 02 2C
C
P
Q
-A RP Y Y 21BB 3D16 D6T- 04 3C
R
-Y TIME 525-600
32.20.04.1
E
F
-A RP Y Y 21BA 3E17 AXC- 04 4B
H
G
CE
-A RP Y Y 21BB 3E17 AXC- 05 4C
START
-O RP Y Y 21BB 3E17 AXC- 06 5C
Q
LATCH
I RP Y Y 21BF 3F16 Z6P- 04 6C
B
-Y CE START
LATCH
*3—32.32.13.1
*3—32.33.17.1
*3—32.13.32.1
*4—32.20.80.1
*3—32.12.40.1
+Y START
*CE
32.05.01.0—*2
G
I RP Y Y 21BF 3F16 Z6P- 03 3D
F
B
L
C
-A RP Y Y 21BA 3E17 AXC- 01 4D
-Y TIME 300-450
32.20.03.1
-Y TIME 300-150
32.20.03.1
D
A
CE
-A RP Y Y 21BB 3E17 AXC- 02 4E
START TIME
-O RP Y Y 21BB 3E17 AXC- 03 5E
R
E
LATCH
I RP Y Y 21BF 3F16 Z6P- 05 6E
D
-Y CE START
TIME
*5—32.32.13.1
*5—32.33.17.1

*1—21B3D01P
*5—21B3T16D
*2—21B3D01Q
——21B1T16D
*3—21B3T16C
——21B1T16C
*4—21B3A32C
——21B4A01C

MDM.4020 COMMENTS

TAG	DATE	E.C.NO.	TAG	DATE	E.C.NO.	TAG	DATE	E.C.NO.	TAG	DATE	E.C.NO.
A	09-01-64	121550L	B	10-15-64	121567	C	12-10-64	121583	D	03-18-65	121598
E	11-19-65	125601	F	03-10-67	125658	G	12-18-67	131803			

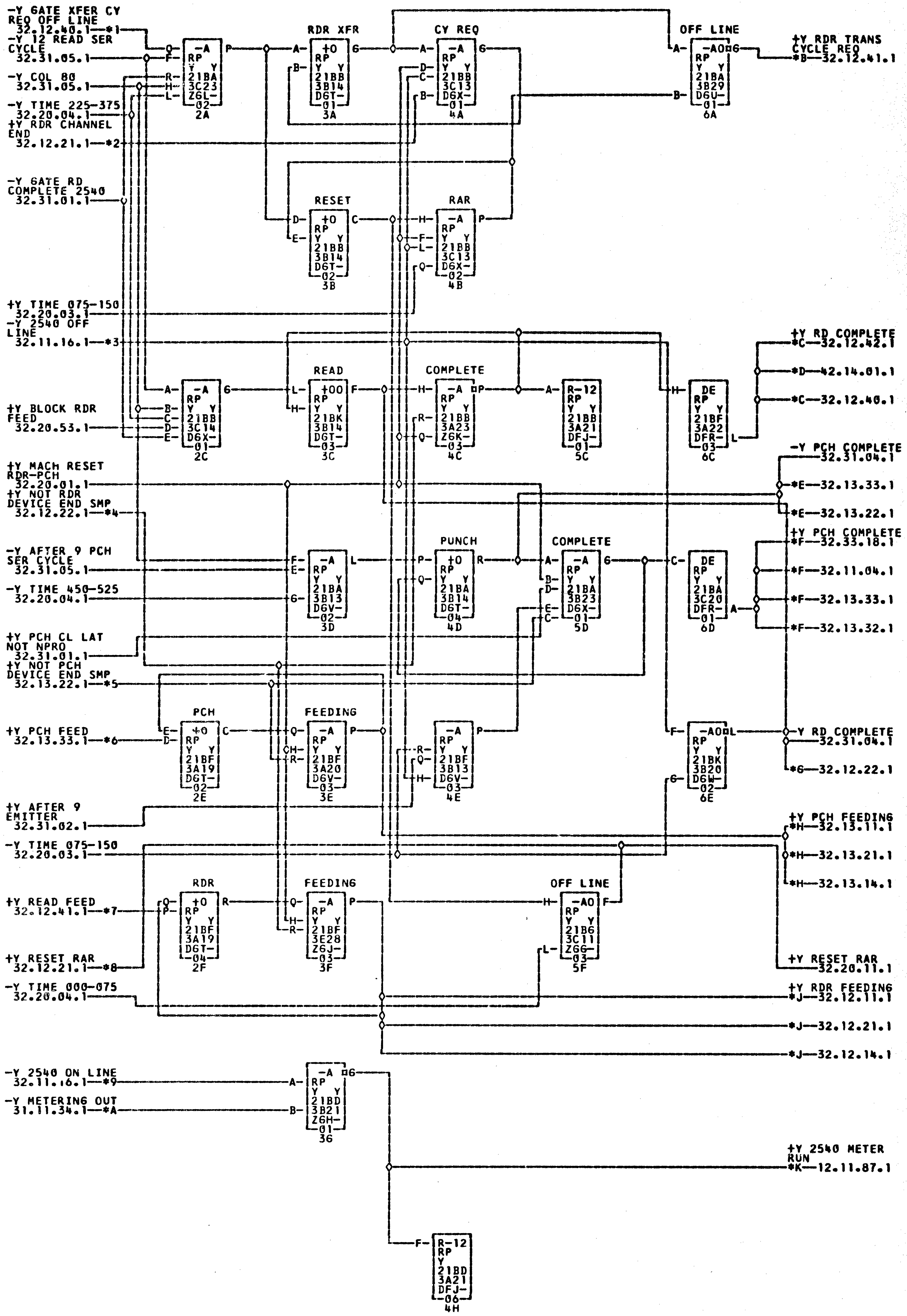
-Y GATE XFER CY REQ OFF LINE 32.12.40.1—*1
-Y 12 READ SER CYCLE 32.31.05.1
-Y COL 80 32.31.05.1
-Y TIME 225-375 32.20.04.1
+Y RDR CHANNEL END 32.12.21.1—*2
-Y GATE RD COMPLETE 2540 32.31.01.1
+Y TIME 075-150 32.20.03.1
-Y 2540 OFF LINE 32.11.16.1—*3
+Y BLOCK RDR FEED 32.20.53.1
+Y MACH RESET RDR-PCH 32.20.01.1
+Y NOT RDR DEVICE END SMP 32.12.22.1—*4
-Y AFTER 9 PCH SER CYCLE 32.31.05.1
-Y TIME 450-525 32.20.04.1
+Y PCH CL LAT NOT NPRO 32.31.01.1
+Y NOT PCH DEVICE END SMP 32.13.22.1—*5
+Y PCH FEED 32.13.33.1—*6
+Y AFTER 9 EMITTER 32.31.02.1
-Y TIME 075-150 32.20.03.1
+Y READ FEED 32.12.41.1—*7
+Y RESET RAR 32.12.21.1—*8
-Y TIME 000-075 32.20.04.1
-Y 2540 ON LINE 32.11.16.1—*9
-Y METERING OUT 31.11.34.1—*A
-A RP Y Y 21BA 3C23 Z6L- -02- 2A
RDR XFR +0 RP Y Y 21BB 3B14 D6T- -01- 3A
CY REQ -A RP Y Y 21BB 3C13 D6X- -01- 4A
OFF LINE -AO RP Y Y 21BA 3B29 D6U- -01- 6A
RESET +0 RP Y Y 21BB 3B14 D6T- -02- 3B
RAR -A RP Y Y 21BB 3C13 D6X- -02- 4B
-A RP Y Y 21BB 3C14 D6X- -01- 2C
READ +00 RP Y Y 21BK 3B14 D6T- -03- 3C
COMPLETE -A RP Y Y 21BB 3A23 Z6K- -03- 4C
R-12 RP Y Y 21BB 3A21 DFJ- -01- 5C
DE RP Y Y 21BF 3A22 DFR- -03- 6C
-A RP Y Y 21BA 3B13 D6V- -02- 3D
PUNCH +0 RP Y Y 21BA 3B14 D6T- -04- 4D
COMPLETE -A RP Y Y 21BA 3B23 D6X- -01- 5D
DE RP Y Y 21BA 3C20 DFR- -01- 6D
PCH +0 RP Y Y 21BF 3A19 D6T- -02- 2E
FEEDING -A RP Y Y 21BF 3A20 D6V- -03- 3E
-A RP Y Y 21BF 3B13 D6V- -03- 4E
-AO RP Y Y 21BK 3B20 D6W- -02- 6E
RDR +0 RP Y Y 21BF 3A19 D6T- -04- 2F
FEEDING -A RP Y Y 21BF 3E28 Z6J- -03- 3F
OFF LINE -AO RP Y Y 21B6 3C11 Z6G- -03- 5F
-A RP Y Y 21BD 3B21 Z6H- -01- 36
R-12 RP Y 21BD 3A21 DFJ- -06- 4H
+Y RDR TRANS CYCLE REQ *B—32.12.41.1
+Y RD COMPLETE *C—32.12.42.1
*D—42.14.01.1
*C—32.12.40.1
-Y PCH COMPLETE 32.31.04.1
*E—32.13.33.1
*E—32.13.22.1
+Y PCH COMPLETE *F—32.33.18.1
*F—32.11.04.1
*F—32.13.33.1
*F—32.13.32.1
-Y RD COMPLETE 32.31.04.1
*G—32.12.22.1
+Y PCH FEEDING *H—32.13.11.1
*H—32.13.21.1
*H—32.13.14.1
+Y RESET RAR 32.20.11.1
+Y RDR FEEDING *J—32.12.11.1
*J—32.12.21.1
*J—32.12.14.1
+Y 2540 METER RUN *K—12.11.87.1

*1—21B3T22B
*7—21B3A01K
*C—21B3T30A
*F—21B3T19B
*J—21B3T30C

*2—21B3T27A
*8—21B3T29D
———21B1T30A
———21B1T19B
———21B1T30C

*3—21B3T23A
*9—21B3T24D
*D—21B3F32F
*G—21B3T26A
*K—21B3H01H

*4—21B3T14D
*A—21B3T14A
———21B4F01F
———21B1T26A
———21C1C21H

*5—21B3T29B
*B—21B3T23C
*E—21B3T26B
*H—21B3T30B
———40A1C04H

*6—21B3A01L
———21B1T23C
———21B1T26B
———21B1T30B

COMMENTS
MDM.4020-4041-4061

TAG	DATE	E.C.NO.	TAG	DATE	E.C.NO.	TAG	DATE	E.C.NO.	TAG	DATE	E.C.NO.
A	09-01-64	121550L	B	10-15-64	121507	C	11-10-64	121572	D	12-19-64	121583
E	01-21-65	121589	F	02-15-65	121594	G	03-18-65	121596	H	06-22-65	124265
J	11-19-65	125601	K	03 10-66	125633	L	04-28-66	125637			

2-1

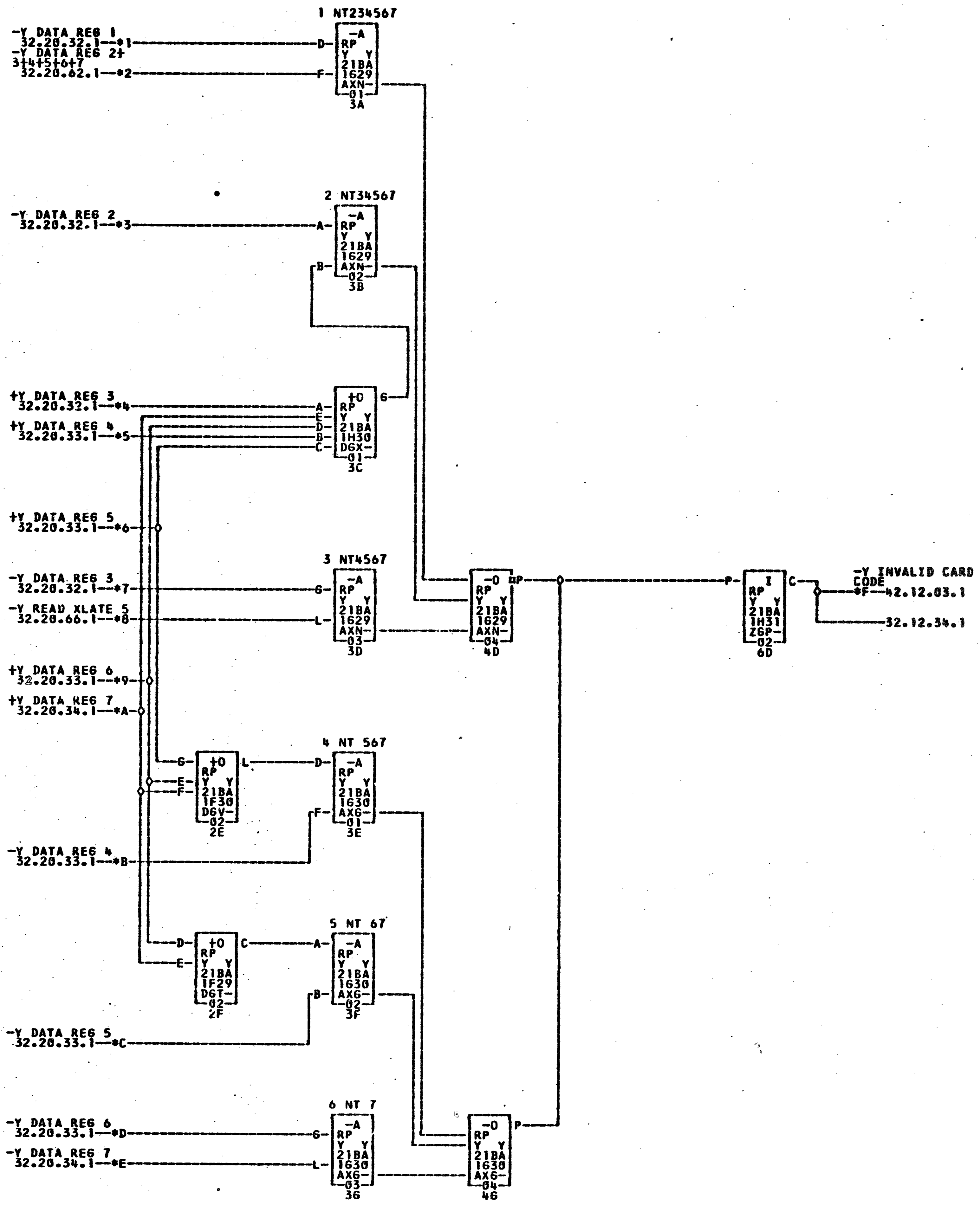
-Y DATA REG 1
32.20.32.1--*1
-Y DATA REG 2+
3+4+5+6+7
32.20.62.1--*2
-Y DATA REG 2
32.20.32.1--*3
+Y DATA REG 3
32.20.32.1--*4
+Y DATA REG 4
32.20.33.1--*5
+Y DATA REG 5
32.20.33.1--*6
-Y DATA REG 3
32.20.32.1--*7
-Y READ XLATE 5
32.20.66.1--*8
+Y DATA REG 6
32.20.33.1--*9
+Y DATA REG 7
32.20.34.1--*A
-Y DATA REG 4
32.20.33.1--*B
-Y DATA REG 5
32.20.33.1--*C
-Y DATA REG 6
32.20.33.1--*D
-Y DATA REG 7
32.20.34.1--*E
1 NT234567
-A RP Y Y 21BA 1629 AXN- -01- 3A
2 NT34567
-A RP Y Y 21BA 1629 AXN- -02- 3B
+0 RP Y Y 21BA 1H30 D6X- -01- 3C
3 NT4567
-A RP Y Y 21BA 1629 AXN- -03- 3D
4 NT 567
-A RP Y Y 21BA 1630 AX6- -01- 3E
+0 RP Y Y 21BA 1F30 D6V- -02- 2E
5 NT 67
-A RP Y Y 21BA 1630 AX6- -02- 3F
+0 RP Y Y 21BA 1F29 D6T- -02- 2F
6 NT 7
-A RP Y Y 21BA 1630 AX6- -03- 36
-0 RP Y Y 21BA 1629 AXN- -04- 4D
-0 RP Y Y 21BA 1630 AX6- -04- 46
I RP Y Y 21BA 1H31 Z6P- -02- 6D
-Y INVALID CARD CODE
*F--42.12.03.1
32.12.34.1

*1--21B1T04C
*7--21B1T05A
*D--21B1T06C

*2--21B1C32A
*8--21B1C32F
*E--21B1T07A

*3--21B1T04D
*9--21B1T06D
*F--21B1H32N

*4--21B1T05B
*A--21B1T07B
------21B4F03N

*5--21B1T05D
*B--21B1T05C

*6--21B1T06B
*C--21B1T06A

COMMENTS

TAG	DATE	E.C.NO.	TAG	DATE	E.C.NO.	TAG	DATE	E.C.NO.	TAG	DATE	E.C.NO.
A	09-01-64	121550K									

TRANSFER CYCLE REQ AND ALLOW CYCLE

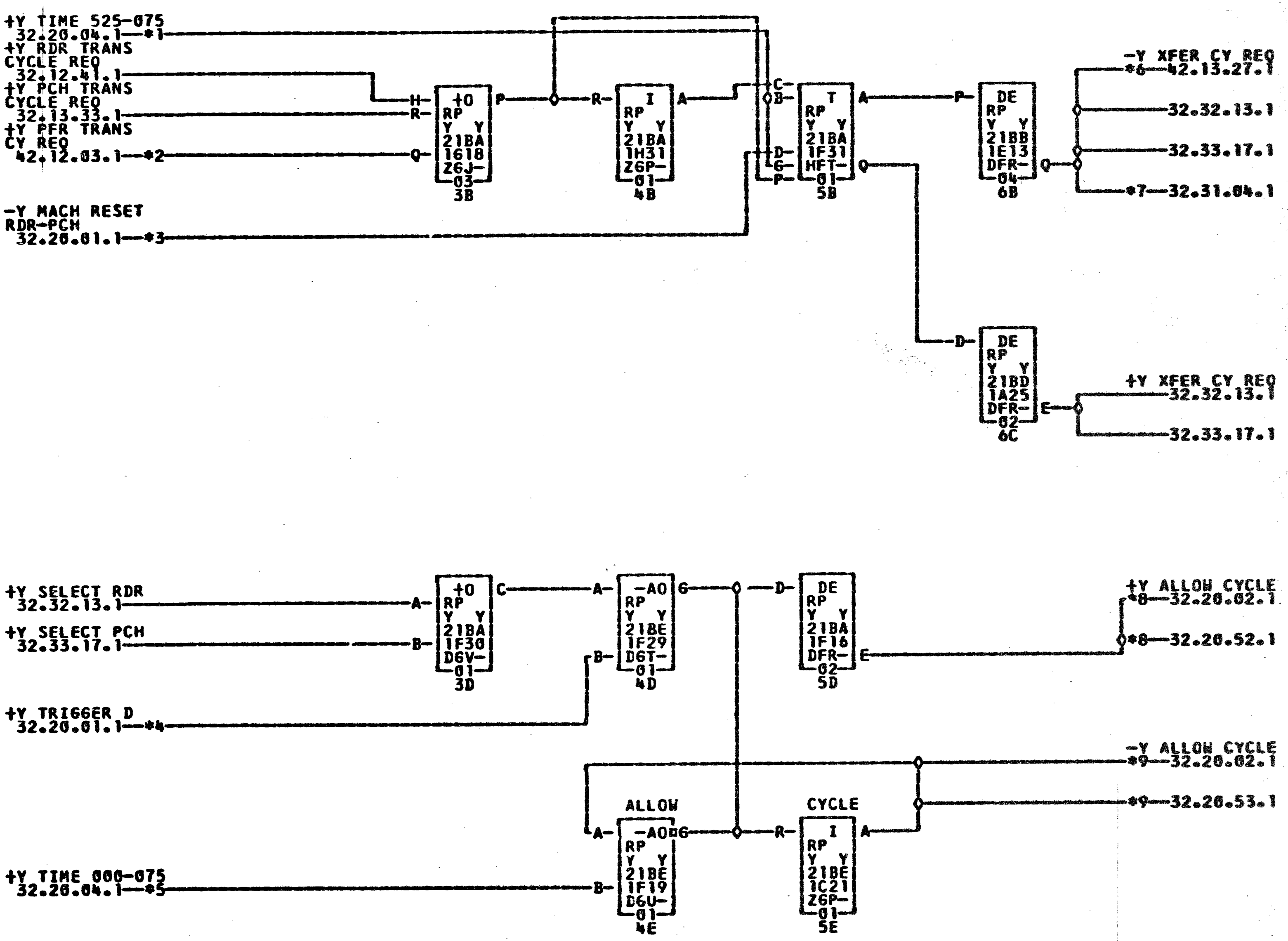
+Y TIME 525-075
32.20.04.1—*1
+Y RDR TRANS
CYCLE REQ
32.12.41.1
+Y PCH TRANS
CYCLE REQ
32.13.33.1
+Y PFR TRANS
CY REQ
42.12.03.1—*2
-Y MACH RESET
RDR-PCH
32.20.01.1—*3
H
R
Q
+O
RP
Y Y
21BA
1G18
Z6J-
03
3B
P
R
I
RP
Y Y
21BA
1H31
Z6P-
01
4B
A
C
B
D
G
P
T
RP
Y Y
21BA
1F31
HFT-
01
5B
A
Q
P
DE
RP
Y Y
21BB
1E13
DFR-
04
6B
Q
-Y XFER CY REQ
*6—42.13.27.1
32.32.13.1
32.33.17.1
*7—32.31.04.1
D
DE
RP
Y Y
21BD
1A25
DFR-
02
6C
E
+Y XFER CY REQ
32.32.13.1
32.33.17.1
+Y SELECT RDR
32.32.13.1
+Y SELECT PCH
32.33.17.1
A
B
+O
RP
Y Y
21BA
1F30
D6V-
01
3D
C
A
B
-AO
RP
Y Y
21BE
1F29
D6T-
01
4D
G
D
DE
RP
Y Y
21BA
1F16
DFR-
02
5D
E
+Y ALLOW CYCLE
*8—32.20.02.1
*8—32.20.52.1
+Y TRIGGER D
32.20.01.1—*4
-Y ALLOW CYCLE
*9—32.20.02.1
*9—32.20.53.1
ALLOW
A
-AO
RP
Y Y
21BE
1F19
D6U-
01
4E
G
B
R
CYCLE
I
RP
Y Y
21BE
1C21
Z6P-
01
5E
A
+Y TIME 000-075
32.20.04.1—*5

*1—21B1T04A
—21B4F03P
—21B3T17B

*2—21B1H32B
*7—21B1T29A

*3—21B3T12D
—21B3T29A

*4—21B1T12B
*8—21B1T15A

*5—21B1T01B
—21B3T15A

*6—21B1H32P
*9—21B1T17B

COMMENTS
FSD.402-403-404-507

TAG	DATE	E.C.NO.	TAG	DATE	E.C.NO.	TAG	DATE	E.C.NO.	TAG	DATE	E.C.NO.
A	09-01-64	121550K	B	10-15-64	121567	C	12-19-64	121583	D	03-18-65	121598
E	08-18-65	124270									

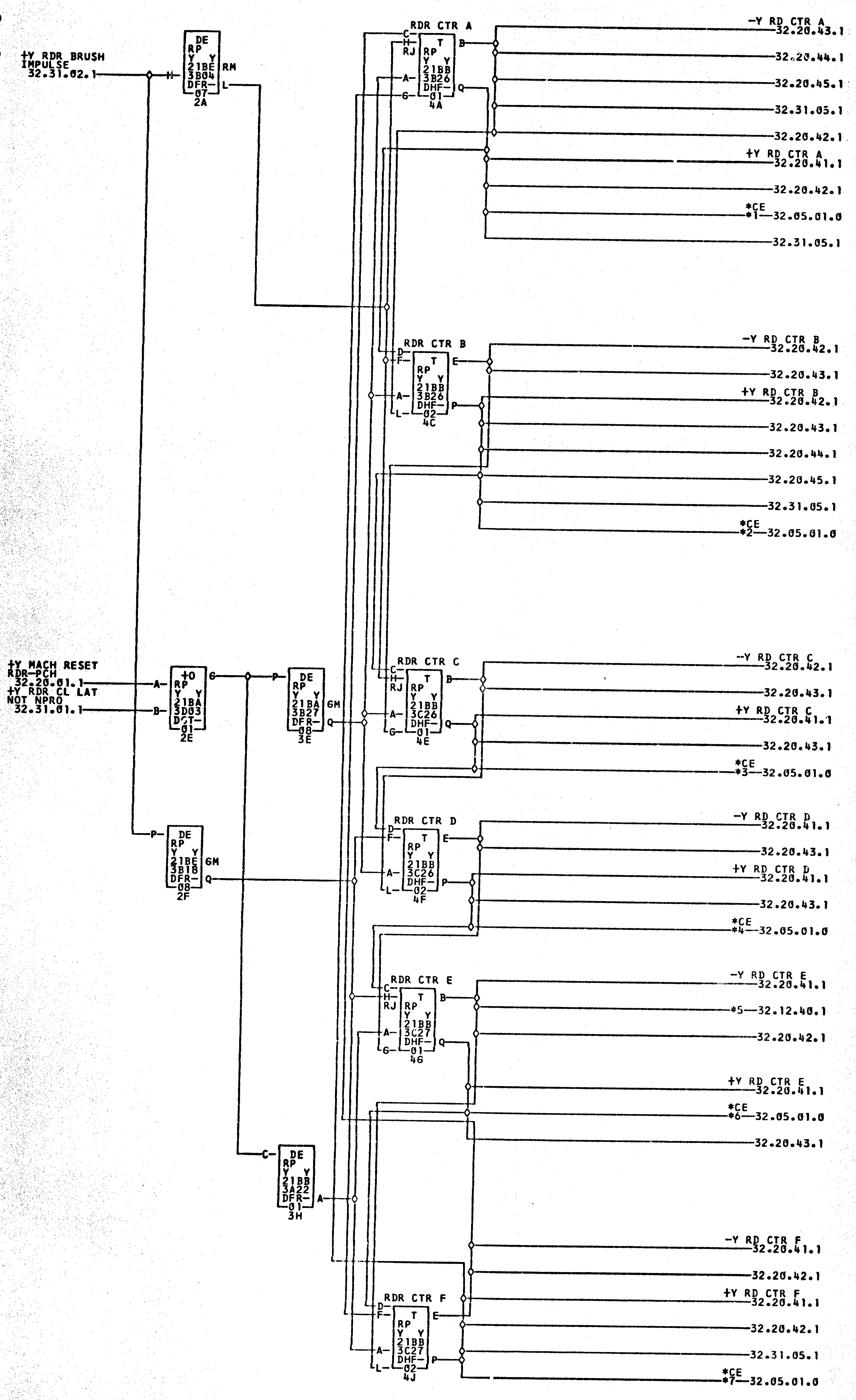
+Y RDR BRUSH IMPULSE 32.31.02.1
DE RP Y Y 21BE 3B04 DFR-07 2A RM
RDR CTR A
RP Y Y 21BB 3B26 DHF-01 4A
-Y RD CTR A 32.20.43.1
32.20.44.1
32.20.45.1
32.31.05.1
32.20.42.1
+Y RD CTR A 32.20.41.1
32.20.42.1
*CE *1—32.05.01.0
32.31.05.1
RDR CTR B
RP Y Y 21BB 3B26 DHF-02 4C
-Y RD CTR B 32.20.42.1
32.20.43.1
+Y RD CTR B 32.20.42.1
32.20.43.1
32.20.44.1
32.20.45.1
32.31.05.1
*CE *2—32.05.01.0
+Y MACH RESET RDR-PCH 32.20.01.1
+Y RDR CL LAT NOT NPRO 32.31.01.1
+O RP Y Y 21BA 3D03 DOT-01 2E
DE RP Y Y 21BA 3B27 DFR-08 3E 6M
RDR CTR C
RP Y Y 21BB 3C26 DHF-01 4E
-Y RD CTR C 32.20.42.1
32.20.43.1
+Y RD CTR C 32.20.41.1
32.20.43.1
*CE *3—32.05.01.0
DE RP Y Y 21BE 3B18 DFR-08 2F 6M
RDR CTR D
RP Y Y 21BB 3C26 DHF-02 4F
-Y RD CTR D 32.20.41.1
32.20.43.1
+Y RD CTR D 32.20.41.1
32.20.43.1
*CE *4—32.05.01.0
RDR CTR E
RP Y Y 21BB 3C27 DHF-01 4G
-Y RD CTR E 32.20.41.1
*5—32.12.40.1
32.20.42.1
+Y RD CTR E 32.20.41.1
*CE *6—32.05.01.0
32.20.43.1
DE RP Y Y 21BB 3A22 DFR-01 3H
RDR CTR F
RP Y Y 21BB 3C27 DHF-02 4J
-Y RD CTR F 32.20.41.1
32.20.42.1
+Y RD CTR F 32.20.41.1
32.20.42.1
32.31.05.1
*CE *7—32.05.01.0

*1—21B3C02K ——CERPA022
*4—21B3C02N ——CERPA025
*7—21B3C02Q ——CERPA027
*2—21B3C02L ——CERPA023
*5—21B3T13C ——21B1T13C
*3—21B3C02M ——CERPA024
*6—21B3C02P ——CERPA026

MDM. 4041 COMMENTS

TAG	DATE	E.C.NO.	TAG	DATE	E.C.NO.	TAG	DATE	E.C.NO.	TAG	DATE	E.C.NO.
A	09-01-64	121550L	B	10-15-64	121567	C	02-15-65	121594	D	11-19-65	125601
E	03-10-67	125658									

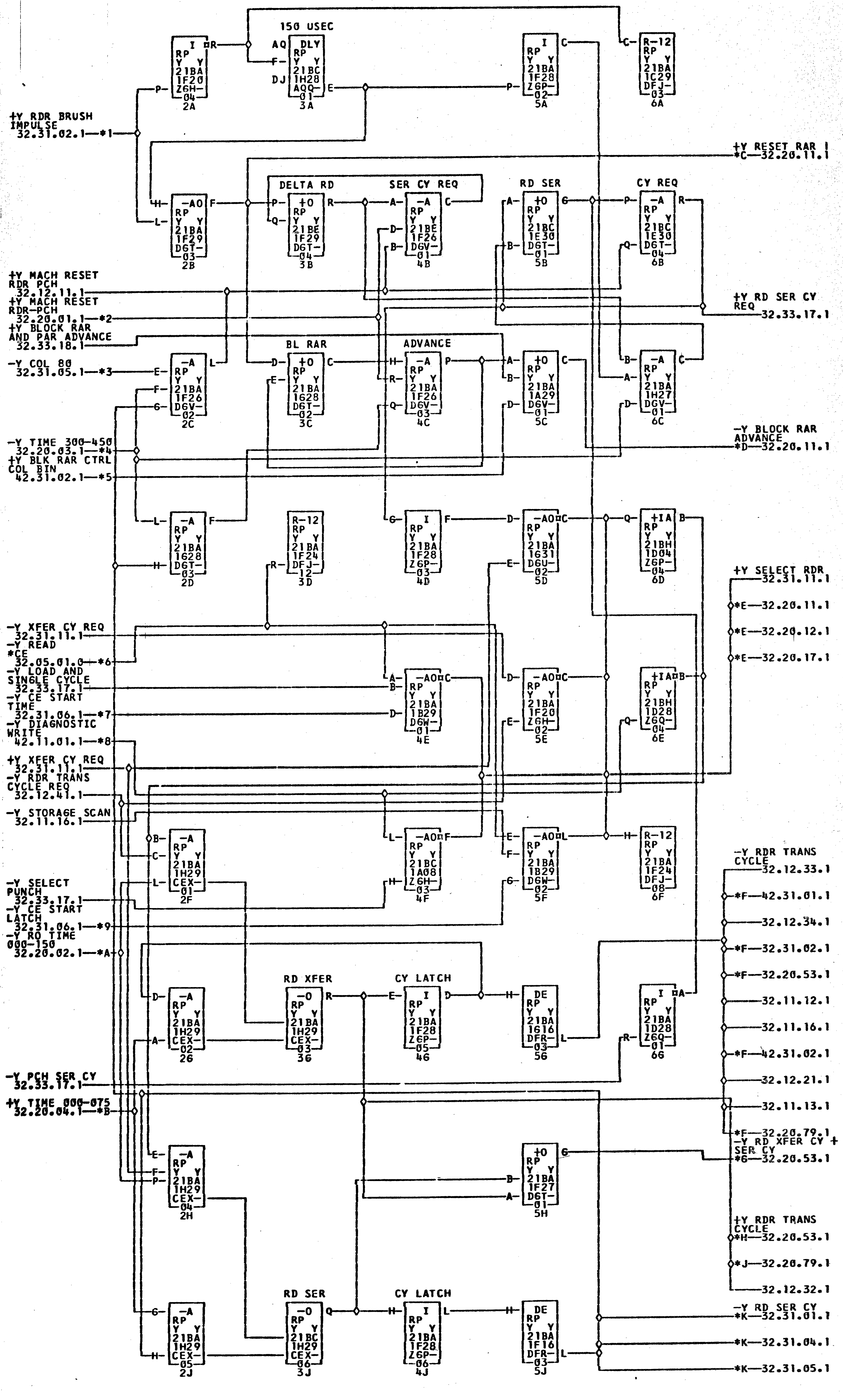
150 USEC DLY
DELTA RD
SER CY REQ
RD SER
CY REQ
BL RAR
ADVANCE
RD XFER
CY LATCH
RD SER
CY LATCH
+Y RDR BRUSH IMPULSE 32.31.02.1—*1
+Y MACH RESET RDR PCH 32.12.11.1
+Y MACH RESET RDR-PCH 32.20.01.1—*2
+Y BLOCK RAR AND PAR ADVANCE 32.33.18.1
-Y COL 80 32.31.05.1—*3
-Y TIME 300-450 32.20.03.1—*4
+Y BLK RAR CTRL COL BIN 42.31.02.1—*5
-Y XFER CY REQ 32.31.11.1
-Y READ *CE 32.05.01.0—*6
-Y LOAD AND SINGLE CYCLE 32.33.17.1
-Y CE START TIME 32.31.06.1—*7
-Y DIAGNOSTIC WRITE 42.11.01.1—*8
+Y XFER CY REQ 32.31.11.1
-Y RDR TRANS CYCLE REQ 32.12.41.1
-Y STORAGE SCAN 32.11.16.1
-Y SELECT PUNCH 32.33.17.1
-Y CE START LATCH 32.31.06.1—*9
-Y RO TIME 000-150 32.20.02.1—*A
-Y PCH SER CY 32.33.17.1
+Y TIME 000-075 32.20.04.1—*B
+Y RESET RAR I *C—32.20.11.1
+Y RD SER CY REQ—32.33.17.1
-Y BLOCK RAR ADVANCE *D—32.20.11.1
+Y SELECT RDR—32.31.11.1
*E—32.20.11.1
*E—32.20.12.1
*E—32.20.17.1
-Y RDR TRANS CYCLE—32.12.33.1
*F—42.31.01.1
32.12.34.1
*F—32.31.02.1
*F—32.20.53.1
32.11.12.1
32.11.16.1
*F—42.31.02.1
32.12.21.1
32.11.13.1
*F—32.20.79.1
-Y RD XFER CY + SER CY *G—32.20.53.1
+Y RDR TRANS CYCLE *H—32.20.53.1
*J—32.20.79.1
32.12.32.1
-Y RD SER CY *K—32.31.01.1
*K—32.31.04.1
*K—32.31.05.1
2A 3A 5A 6A
2B 3B 4B 5B 6B
2C 3C 4C 5C 6C
2D 3D 4D 5D 6D
4E 5E 6E
2F 4F 5F 6F
2G 3G 4G 5G 6G
2H 5H
2J 3J 4J 5J

*1—21B1T09C
——CERPB084
*C—21B1T18A
*F—21B1T20D
*H—21B1T03A

*2—21B1T17A
*7—21B1T16D
——21B3T18A
——21B3T20D
——21B3T03A

*3—21B1T13A
*8—21B1A32B
*D—21B1T17C
——21B3A32K
*J—21B1A32E

*4—21B1T02A
*9—21B1T16C
——21B3T17C
——21B4A01K
——21B4D02E

*5—21B1F32H
*A—21B1T01A
*E—21B1T17D
*G—21B1T19C
*K—21B1T19D

*6—21B1E01E
*B—21B1T01B
——21B3T17D
——21B3T19C
——21B3T19D

COMMENTS
MDM.4020-4040-4041-5041

TAG	DATE	E.C.NO.	TAG	DATE	E.C.NO.	TAG	DATE	E.C.NO.	TAG	DATE	E.C.NO.
A	09-01-64	121550K	B	10-15-64	121567	C	11-09-64	121572	D	12-19-64	121583
E	01-21-65	121589	F	03-18-65	121598	G	04-26-65	124237	H	06-22-65	124265
J	08-18-65	124270	K	12-18-67	131803						

READER STACKER SELECT

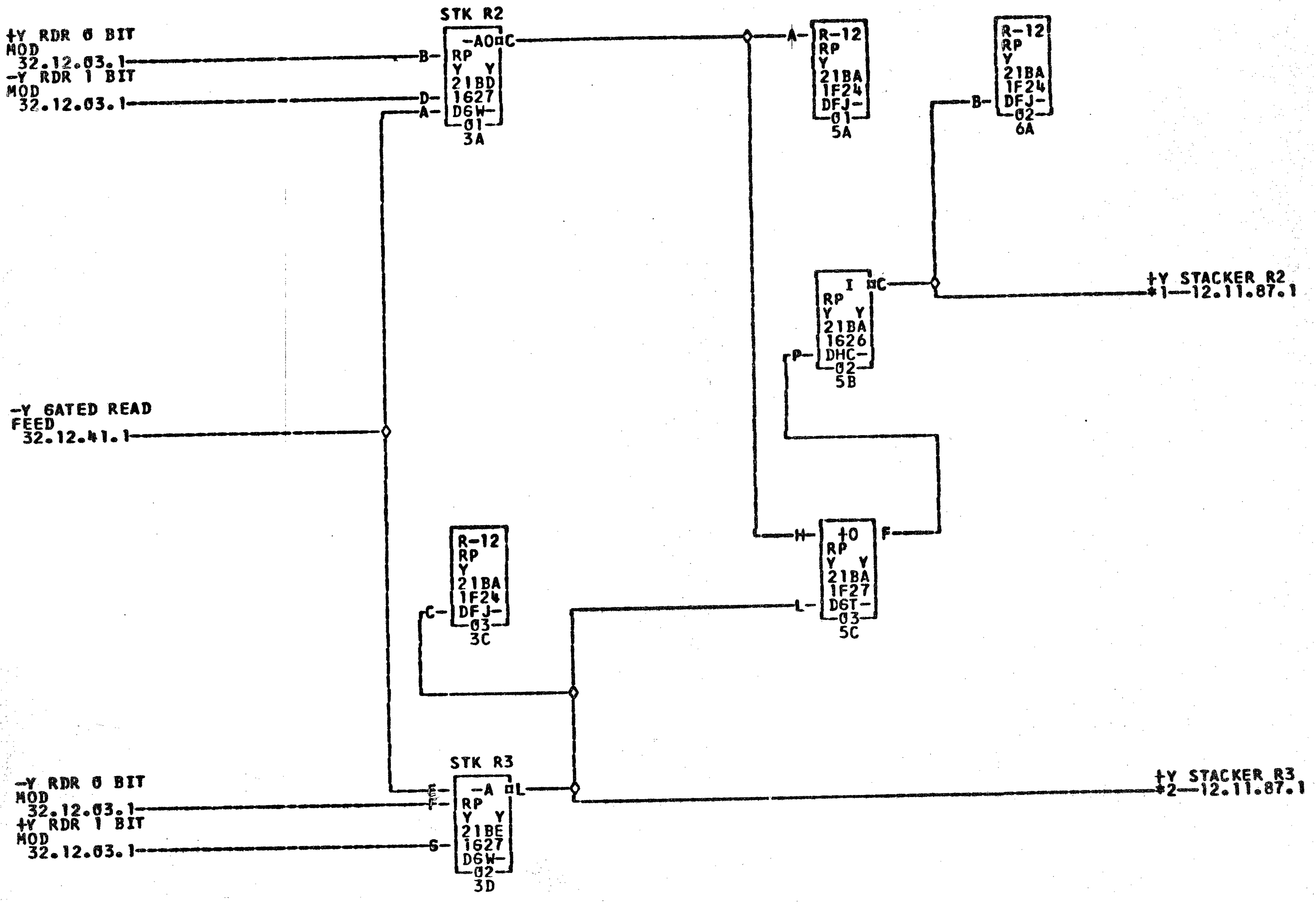
STK R2
+Y RDR 0 BIT MOD 32.12.03.1
-Y RDR 1 BIT MOD 32.12.03.1
B
D
A
-AO
C
RP
Y Y
21BD
1627
D6W
01
3A
A
R-12
RP
Y
21BA
1F24
DFJ
01
5A
B
R-12
RP
Y
21BA
1F24
DFJ
02
6A
I
C
RP
Y Y
21BA
1626
DHC
02
5B
P
+Y STACKER R2
*1—12.11.87.1
-Y GATED READ FEED 32.12.41.1
H
+0
F
RP
Y Y
21BA
1F27
D6T
03
5C
L
C
R-12
RP
Y
21BA
1F24
DFJ
03
3C
STK R3
-Y RDR 0 BIT MOD 32.12.03.1
+Y RDR 1 BIT MOD 32.12.03.1
E
F
G
-A
L
RP
Y Y
21BE
1627
D6W
02
3D
+Y STACKER R3
*2—12.11.87.1

*1—21B1T21A
——21B3T21B

——21B3T21A
——21B3H01E

——21B3H01D
——21C1C21E

——21C1C21D
——40A1C04E

——40A1C04D

*2—21B1T21B

COMMENTS

TAG	DATE	E.C.NO.	TAG	DATE	E.C.NO.	TAG	DATE	E.C.NO.	TAG	DATE	E.C.NO.
A	09-01-64	121550K	B	11-09-64	121572	C	02-15-65	121594	D	03-18-65	121598
E	04-26-65	124237	F	05-26-65	124248	6	06-23-66	125647			

PUNCH TIME COUNTER A-B-C-D

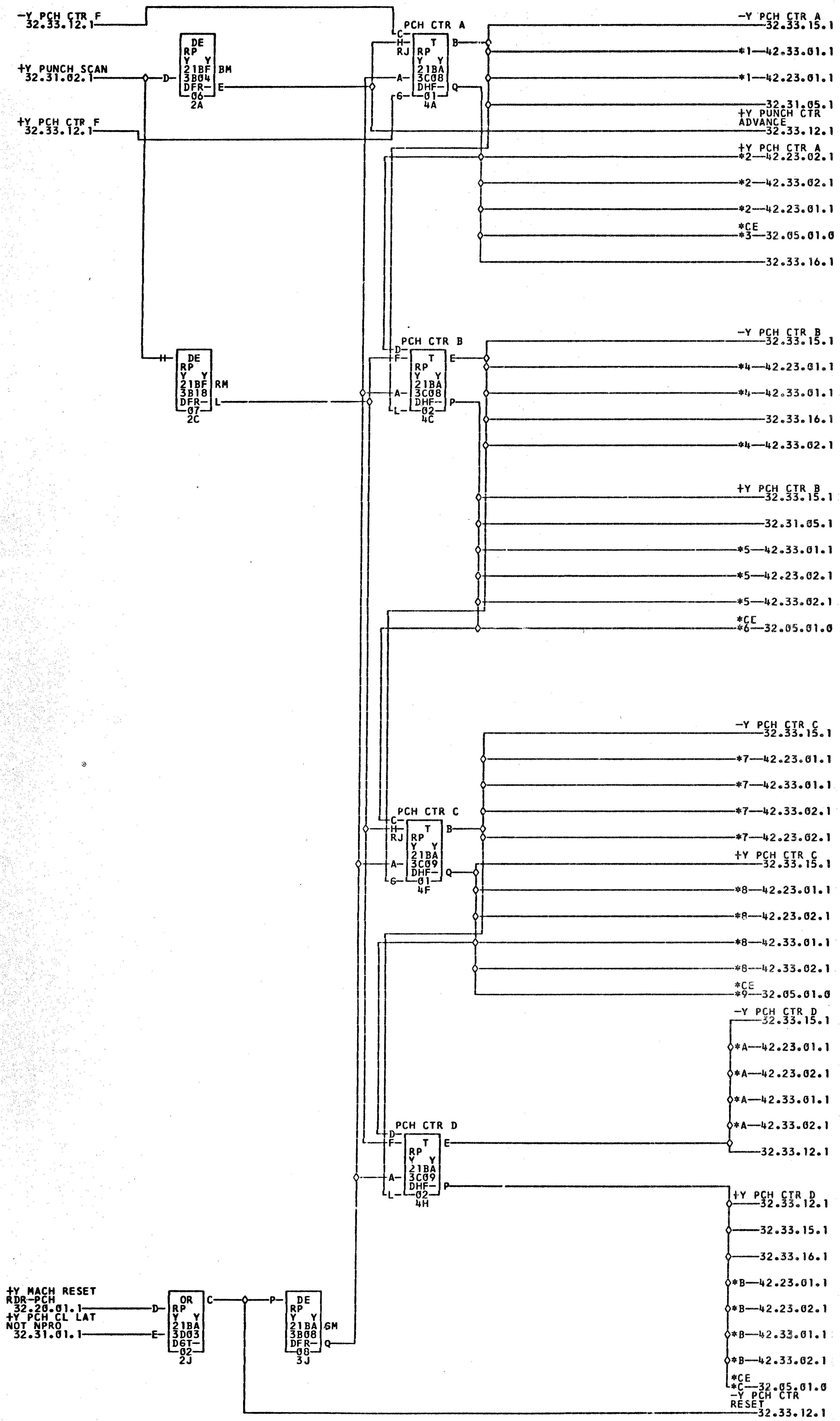
-Y PCH CTR F
32.33.12.1
+Y PUNCH SCAN
32.31.02.1
+Y PCH CTR F
32.33.12.1
DE RP Y Y 21BF 3B04 DFR- 06 2A BM
PCH CTR A
T RP Y Y 21BA 3C08 DHF- 01 4A
-Y PCH CTR A 32.33.15.1
*1—42.33.01.1
*1—42.23.01.1
32.31.05.1
+Y PUNCH CTR ADVANCE 32.33.12.1
+Y PCH CTR A
*2—42.23.02.1
*2—42.33.02.1
*2—42.23.01.1
*CE
*3—32.05.01.0
32.33.16.1
DE RP Y Y 21BF 3B18 DFR- 07 2C RM
PCH CTR B
T RP Y Y 21BA 3C08 DHF- 02 4C
-Y PCH CTR B 32.33.15.1
*4—42.23.01.1
*4—42.33.01.1
32.33.16.1
*4—42.33.02.1
+Y PCH CTR B 32.33.15.1
32.31.05.1
*5—42.33.01.1
*5—42.23.02.1
*5—42.33.02.1
*CE
*6—32.05.01.0
PCH CTR C
T RP Y Y 21BA 3C09 DHF- 01 4F
-Y PCH CTR C 32.33.15.1
*7—42.23.01.1
*7—42.33.01.1
*7—42.33.02.1
*7—42.23.02.1
+Y PCH CTR C 32.33.15.1
*8—42.23.01.1
*8—42.23.02.1
*8—42.33.01.1
*8—42.33.02.1
*CE
*9—32.05.01.0
-Y PCH CTR D 32.33.15.1
*A—42.23.01.1
*A—42.23.02.1
*A—42.33.01.1
*A—42.33.02.1
32.33.12.1
PCH CTR D
T RP Y Y 21BA 3C09 DHF- 02 4H
+Y PCH CTR D 32.33.12.1
32.33.15.1
32.33.16.1
*B—42.23.01.1
*B—42.23.02.1
*B—42.33.01.1
*B—42.33.02.1
*CE
*C—32.05.01.0
-Y PCH CTR RESET 32.33.12.1
+Y MACH RESET RDR-PCH
32.20.01.1
+Y PCH CL LAT NOT NPRO
32.31.01.1
OR RP Y Y 21BA 3D03 D6T- 02 2J
DE RP Y Y 21BA 3B08 DFR- 08 3J 6M

*1—21B3B32A ——21B4B01A
*4—21B3B32B ——21B4B01B
*7—21B3B32C ——21B4B01C
*A—21B3B32D ——21B4B01D
*2—21B3B326 ——21B4B016
*5—21B3B32H ——21B4B01H
*8—21B3B32K ——21B4B01K
*B—21B3B32L ——21B4B01L
*3—21B3C02R ——CERPA016
*6—21B3C03A ——CERPA017
*9—21B3C03C ——CERPA018
*C—21B3C03D ——CERPA019

MDM. 4061

COMMENTS

TAG	DATE	E.C.NO.	TAG	DATE	E.C.NO.	TAG	DATE	E.C.NO.	TAG	DATE	E.C.NO.
A	10-15-64	121567	B	12-19-64	121583	C	02-15-65	121594	D	11-19-65	125601
E	04-28-66	125637	F	03-10-67	125658						

0827005 PUNCH TIME COUNTER E-F 2821 32.33.12.1

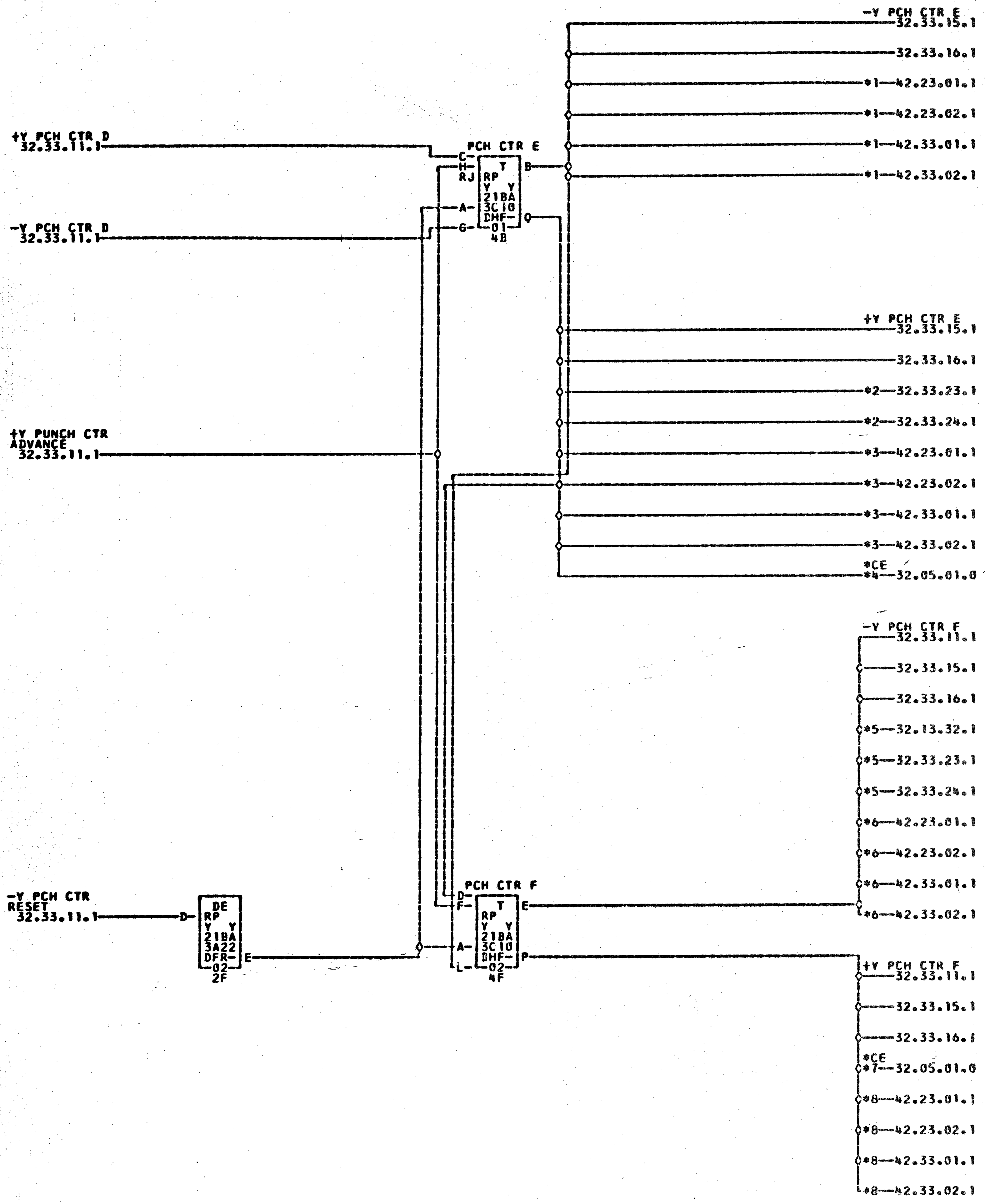
+Y PCH CTR D
32.33.11.1
-Y PCH CTR D
32.33.11.1
+Y PUNCH CTR
ADVANCE
32.33.11.1
-Y PCH CTR
RESET
32.33.11.1
D
DE
RP
Y Y
21BA
3A22
DFR-
02
2F
E
PCH CTR E
C
H
RJ
A
G
T
RP
Y Y
21BA
3C10
DHF-
01
4B
B
Q
PCH CTR F
D
F
A
L
T
RP
Y Y
21BA
3C10
DHF-
02
4F
E
P
-Y PCH CTR E
32.33.15.1
32.33.16.1
*1—42.23.01.1
*1—42.23.02.1
*1—42.33.01.1
*1—42.33.02.1
+Y PCH CTR E
32.33.15.1
32.33.16.1
*2—32.33.23.1
*2—32.33.24.1
*3—42.23.01.1
*3—42.23.02.1
*3—42.33.01.1
*3—42.33.02.1
*CE
*4—32.05.01.0
-Y PCH CTR F
32.33.11.1
32.33.15.1
32.33.16.1
*5—32.13.32.1
*5—32.33.23.1
*5—32.33.24.1
*6—42.23.01.1
*6—42.23.02.1
*6—42.33.01.1
*6—42.33.02.1
+Y PCH CTR F
32.33.11.1
32.33.15.1
32.33.16.1
*CE
*7—32.05.01.0
*8—42.23.01.1
*8—42.23.02.1
*8—42.33.01.1
*8—42.33.02.1

*1—21B3B32E ———21B4B01E
*4—21B3C03E ———CERPA020
*7—21B3C03B ———CERPA021

*2—21B3T14B ———21B1T14B
*5—21B3T15B ———21B1T15B
*8—21B3B32N ———21B4B01N

*3—21B3B32M ———21B4B01M
*6—21B3B32F ———21B4B01F

COMMENTS

TAG	DATE	E.C.NO.	TAG	DATE	E.C.NO.	TAG	DATE	E.C.NO.	TAG	DATE	E.C.NO.
A	10-15-64	121567	B	12-19-64	121583	C	02-15-65	121594	D	11-19-65	125601

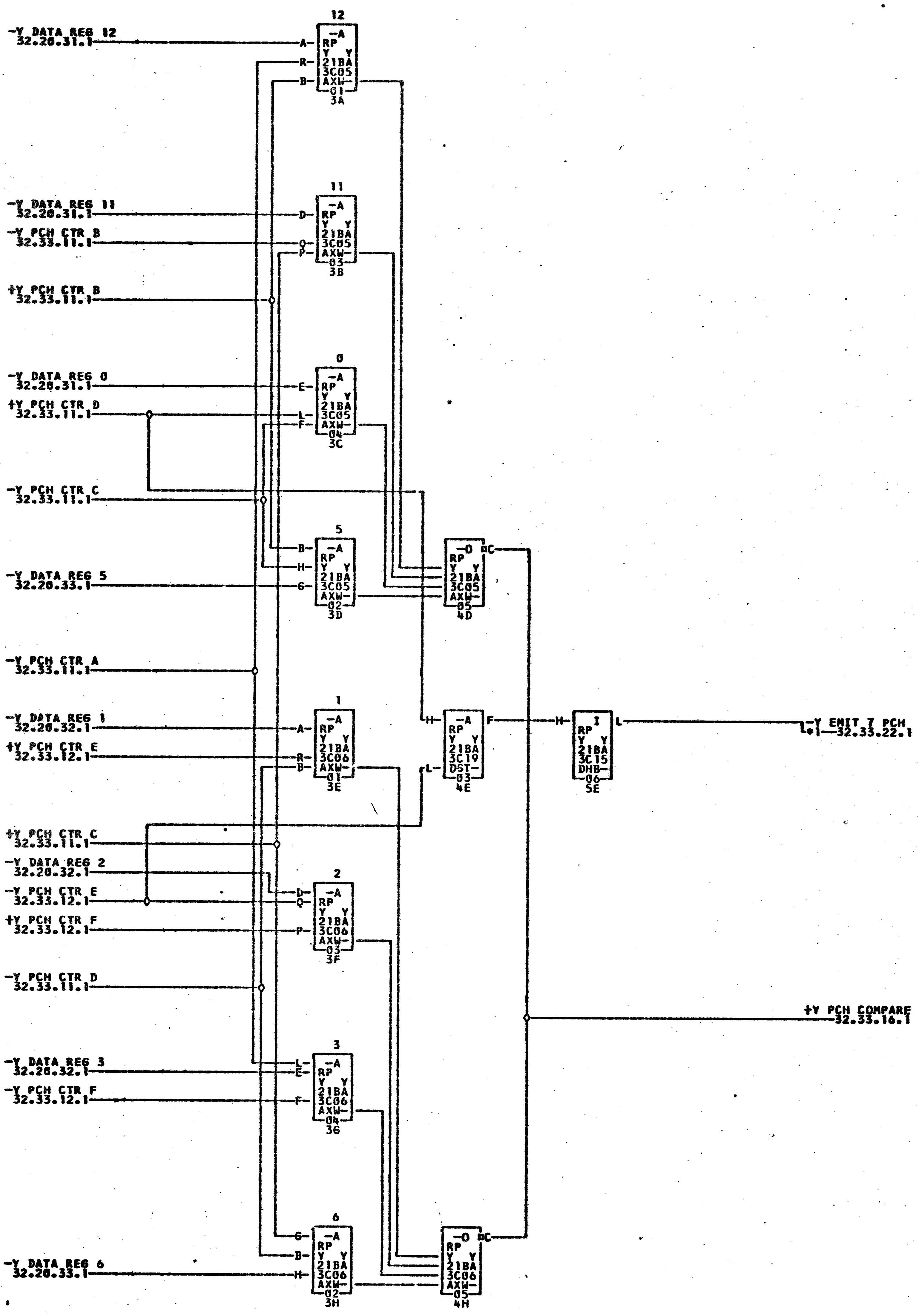
-Y DATA REG 12
32.20.31.1
-Y DATA REG 11
32.20.31.1
-Y PCH CTR B
32.33.11.1
+Y PCH CTR B
32.33.11.1
-Y DATA REG 0
32.20.31.1
+Y PCH CTR D
32.33.11.1
-Y PCH CTR C
32.33.11.1
-Y DATA REG 5
32.20.33.1
-Y PCH CTR A
32.33.11.1
-Y DATA REG 1
32.20.32.1
+Y PCH CTR E
32.33.12.1
+Y PCH CTR C
32.33.11.1
-Y DATA REG 2
32.20.32.1
-Y PCH CTR E
32.33.12.1
+Y PCH CTR F
32.33.12.1
-Y PCH CTR D
32.33.11.1
-Y DATA REG 3
32.20.32.1
-Y PCH CTR F
32.33.12.1
-Y DATA REG 6
32.20.33.1
12
A R B
-A RP Y Y 21BA 3C05 AXW 01 3A
11
D Q P
-A RP Y Y 21BA 3C05 AXW 03 3B
0
E L F
-A RP Y Y 21BA 3C05 AXW 04 3C
5
B H 6
-A RP Y Y 21BA 3C05 AXW 02 3D
-O C RP Y Y 21BA 3C05 AXW 05 4D
1
A R B
-A RP Y Y 21BA 3C06 AXW 01 3E
H L
-A RP Y Y 21BA 3C19 DST 03 4E
F
H
I RP Y Y 21BA 3C15 DHB 06 5E
L
-Y EMIT 7 PCH
*1—32.33.22.1
2
D Q P
-A RP Y Y 21BA 3C06 AXW 03 3F
+Y PCH COMPARE
32.33.16.1
3
L E F
-A RP Y Y 21BA 3C06 AXW 04 36
6
G B H
-A RP Y Y 21BA 3C06 AXW 02 3H
-O C RP Y Y 21BA 3C06 AXW 05 4H

*1—21B3T23B ——21B1T23B

COMMENTS

TAG	DATE	E.C.NO.	TAG	DATE	E.C.NO.	TAG	DATE	E.C.NO.	TAG	DATE	E.C.NO.
A	09-01-64	121550L	B	10-15-64	121567						

0826689 PUNCH COMPARE 4, 7, 8 AND 9 + CE 2821 32.33.16.1

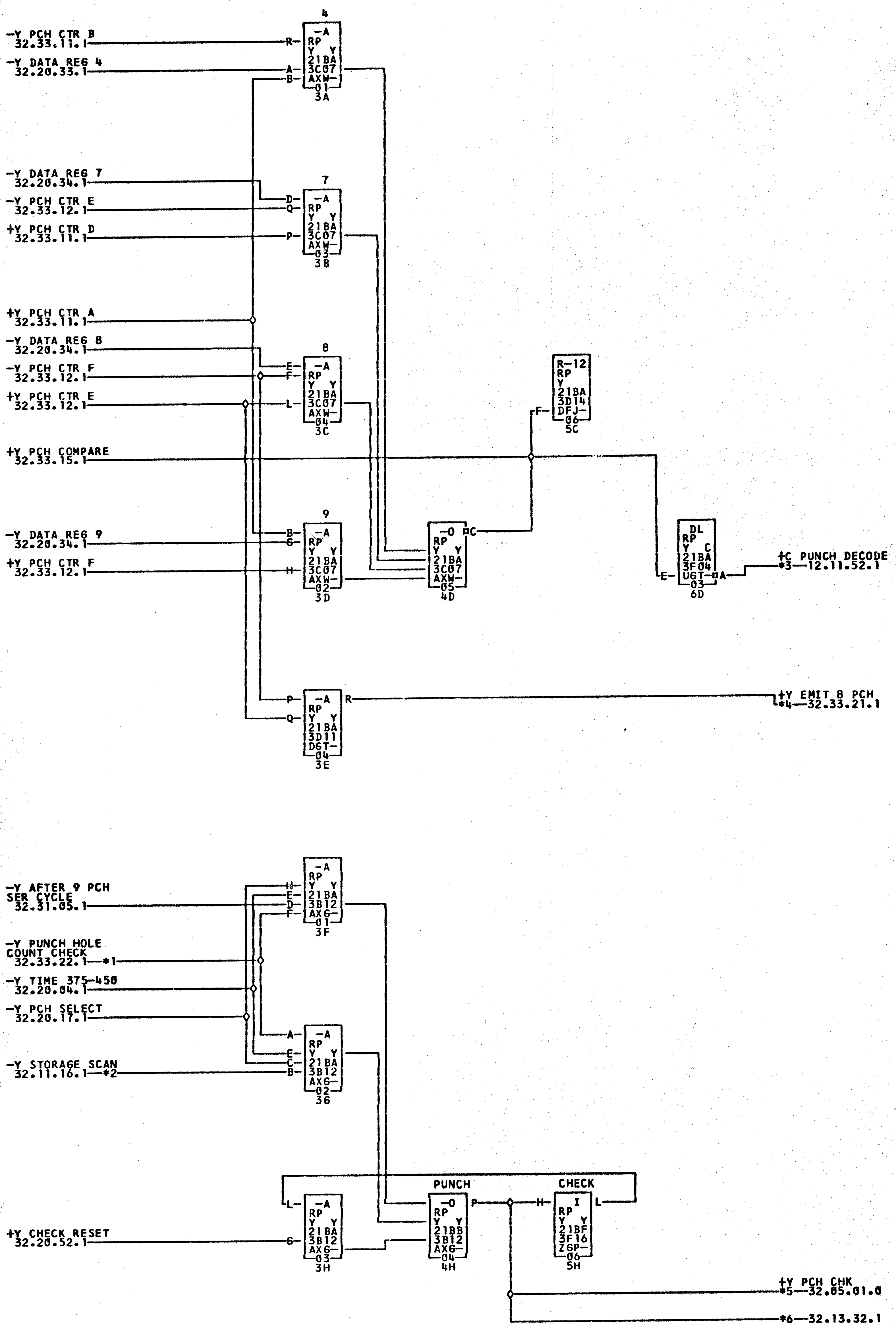
-Y PCH CTR B
32.33.11.1
-Y DATA REG 4
32.20.33.1
4
-A
RP
Y Y
21BA
3C07
AXW
01
3A
-Y DATA REG 7
32.20.34.1
-Y PCH CTR E
32.33.12.1
+Y PCH CTR D
32.33.11.1
7
-A
RP
Y Y
21BA
3C07
AXW
03
3B
+Y PCH CTR A
32.33.11.1
-Y DATA REG 8
32.20.34.1
-Y PCH CTR F
32.33.12.1
+Y PCH CTR E
32.33.12.1
8
-A
RP
Y Y
21BA
3C07
AXW
04
3C
R-12
RP
Y
21BA
3D14
DFJ
06
5C
+Y PCH COMPARE
32.33.15.1
-Y DATA REG 9
32.20.34.1
+Y PCH CTR F
32.33.12.1
9
-A
RP
Y Y
21BA
3C07
AXW
02
3D
-O
RP
Y Y
21BA
3C07
AXW
05
4D
DL
RP
Y C
21BA
3F04
UGT
03
6D
+C PUNCH DECODE
*3—12.11.52.1
-A
RP
Y Y
21BA
3D11
DGT
04
3E
+Y EMIT 8 PCH
*4—32.33.21.1
-Y AFTER 9 PCH
SER CYCLE
32.31.05.1
-A
RP
Y Y
21BA
3B12
AXG
01
3F
-Y PUNCH HOLE
COUNT CHECK
32.33.22.1—*1
-Y TIME 375-450
32.20.04.1
-Y PCH SELECT
32.20.17.1
-Y STORAGE SCAN
32.11.16.1—*2
-A
RP
Y Y
21BA
3B12
AXG
02
3G
+Y CHECK RESET
32.20.52.1
-A
RP
Y Y
21BA
3B12
AXG
03
3H
PUNCH
-O
RP
Y Y
21BB
3B12
AXG
04
4H
CHECK
I
RP
Y Y
21BF
3F16
ZGP
06
5H
+Y PCH CHK
*5—32.05.01.0
*6—32.13.32.1

*1—21B3T15D
—21B1T14C

*2—21B3T16A
*5—21B3D01N

*3—21B3601R
—CERPA014

—21C1C22R
*6—21B3T25D

—40A1C03R
—21B1T25D

*4—21B3T14C

MDM. 4061-4461 COMMENTS

TAG	DATE	E.C.NO.	TAG	DATE	F.C.NO.	TAG	DATE	E.C.NO.	TAG	DATE	E.C.NO.
A	09-01-64	121550L	B	10-15-64	121567	C	02-15-65	121594	D	11-19-65	125601
E	04-28-66	125637	F	03-10-67	125658						

24

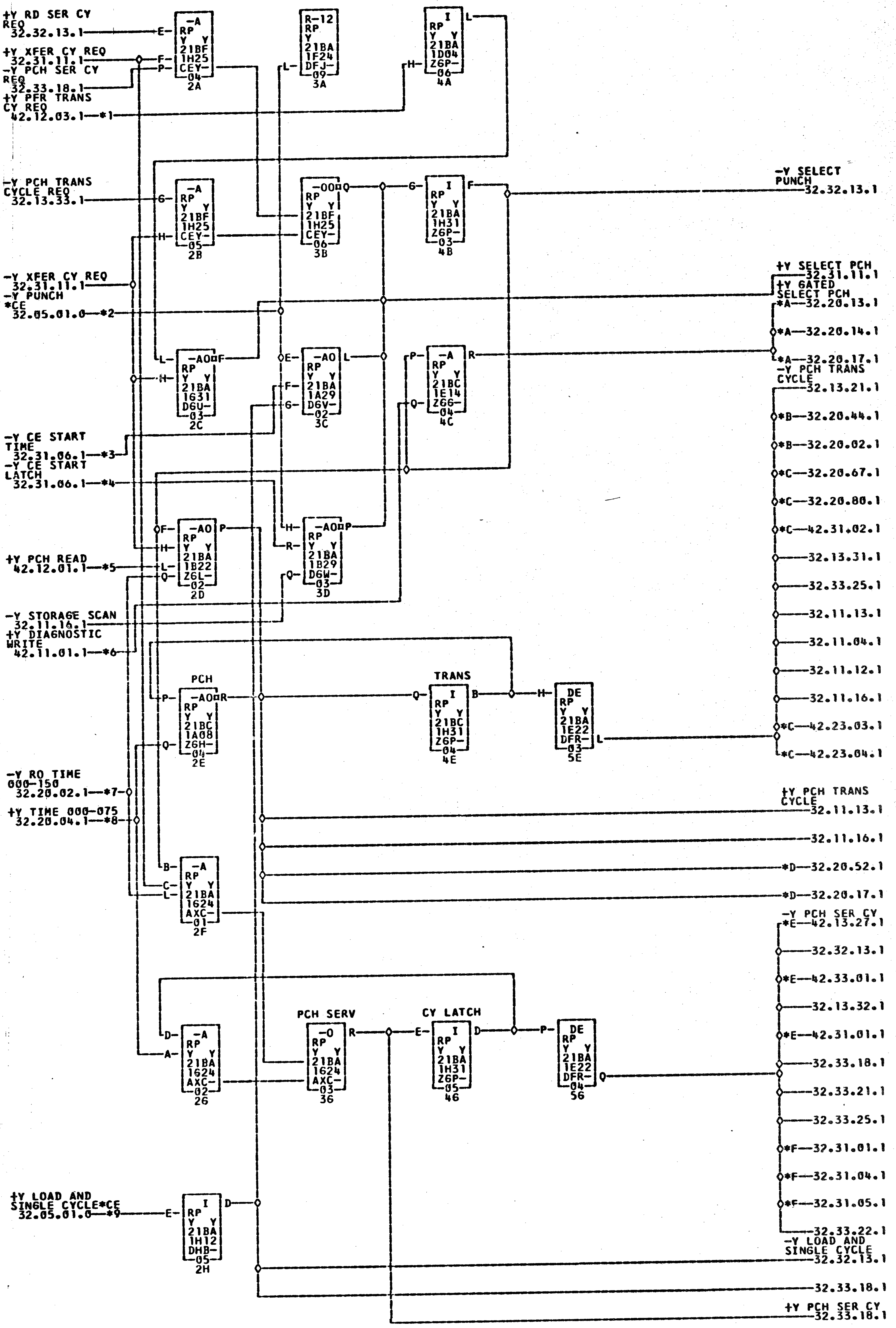
+Y RD SER CY REQ 32.32.13.1
+Y XFER CY REQ 32.31.11.1
-Y PCH SER CY REQ 32.33.18.1
+Y PFR TRANS CY REQ 42.12.03.1—*1
-Y PCH TRANS CYCLE REQ 32.13.33.1
-Y XFER CY REQ 32.31.11.1
-Y PUNCH *CE 32.05.01.0—*2
-Y CE START TIME 32.31.06.1—*3
-Y CE START LATCH 32.31.06.1—*4
+Y PCH READ 42.12.01.1—*5
-Y STORAGE SCAN 32.11.16.1
+Y DIAGNOSTIC WRITE 42.11.01.1—*6
-Y RO TIME 000-150 32.20.02.1—*7
+Y TIME 000-075 32.20.04.1—*8
+Y LOAD AND SINGLE CYCLE*CE 32.05.01.0—*9
E F P -A RP Y Y 21BF 1H25 CEY- 04 2A
L R-12 RP Y 21BA 1F24 DFJ- 09 3A
H I RP Y Y 21BA 1D04 Z6P- 06 4A L
G H -A RP Y Y 21BF 1H25 CEY- 05 2B
-00 Q RP Y Y 21BF 1H25 CEY- 06 3B
G I RP Y Y 21BA 1H31 Z6P- 03 4B F
L H -AO F RP Y Y 21BA 1631 D6U- 03 2C
E F G -AO L RP Y Y 21BA 1A29 D6V- 02 3C
P Q -A RP Y Y 21BC 1E14 Z66- 04 4C R
F H L Q -AO P RP Y Y 21BA 1B22 Z6L- 02 2D
H R Q -AO P RP Y Y 21BA 1B29 D6W- 03 3D
PCH
P Q -AO R RP Y Y 21BC 1A08 Z6H- 04 2E
TRANS
Q I RP Y Y 21BC 1H31 Z6P- 04 4E B
H DE RP Y Y 21BA 1E22 DFR- 03 5E L
B C L -A RP Y Y 21BA 1624 AXC- 01 2F
D A -A RP Y Y 21BA 1624 AXC- 02 2G
PCH SERV
-O RP Y Y 21BA 1624 AXC- 03 3G R
CY LATCH
E I RP Y Y 21BA 1H31 Z6P- 05 4G D
P DE RP Y Y 21BA 1E22 DFR- 03 5G Q
E I RP Y Y 21BA 1H12 DHB- 05 2H D
-Y SELECT PUNCH 32.32.13.1
+Y SELECT PCH 32.31.11.1
+Y GATED SELECT PCH *A—32.20.13.1
*A—32.20.14.1
*A—32.20.17.1
-Y PCH TRANS CYCLE 32.13.21.1
*B—32.20.44.1
*B—32.20.02.1
*C—32.20.67.1
*C—32.20.80.1
*C—42.31.02.1
32.13.31.1
32.33.25.1
32.11.13.1
32.11.04.1
32.11.12.1
32.11.16.1
*C—42.23.03.1
*C—42.23.04.1
+Y PCH TRANS CYCLE 32.11.13.1
32.11.16.1
*D—32.20.52.1
*D—32.20.17.1
-Y PCH SER CY *E—42.13.27.1
32.32.13.1
*E—42.33.01.1
32.13.32.1
*E—42.31.01.1
32.33.18.1
32.33.21.1
32.33.25.1
*F—32.31.01.1
*F—32.31.04.1
*F—32.31.05.1
32.33.22.1
-Y LOAD AND SINGLE CYCLE 32.32.13.1
32.33.18.1
+Y PCH SER CY 32.33.18.1

*1—21B1H32B
*6—21B1A32C
*B—21B1T01D
*E—21B1T20A

*2—21B1E01F
*7—21B1T01A
——21B3T01D
——21B3T20A

——CERPB085
*8—21B1T01B
*C—21B1C32Q
——21B3B32Q

*3—21B1T16D
*9—21B1H01D
——21B4A03Q
——21B4B01Q

*4—21B1T16C
*A—21B1T18D
*D—21B1D01D
*F—21B1T20A

*5—21B1H32C
——21B3T18D
——21B3A01D
——21B3T20A

FSD.404-405-507 COMMENTS

TAG	DATE	E.C.NO.	TAG	DATE	E.C.NO.	TAG	DATE	E.C.NO.	TAG	DATE	E.C.NO.
A	09-01-64	121550K	B	10-15-64	121567	C	11-09-64	121572	D	12-19-64	121583
E	02-15-65	121594	F	03-18-65	121598	G	04-26-65	124237	H	06-22-65	124265

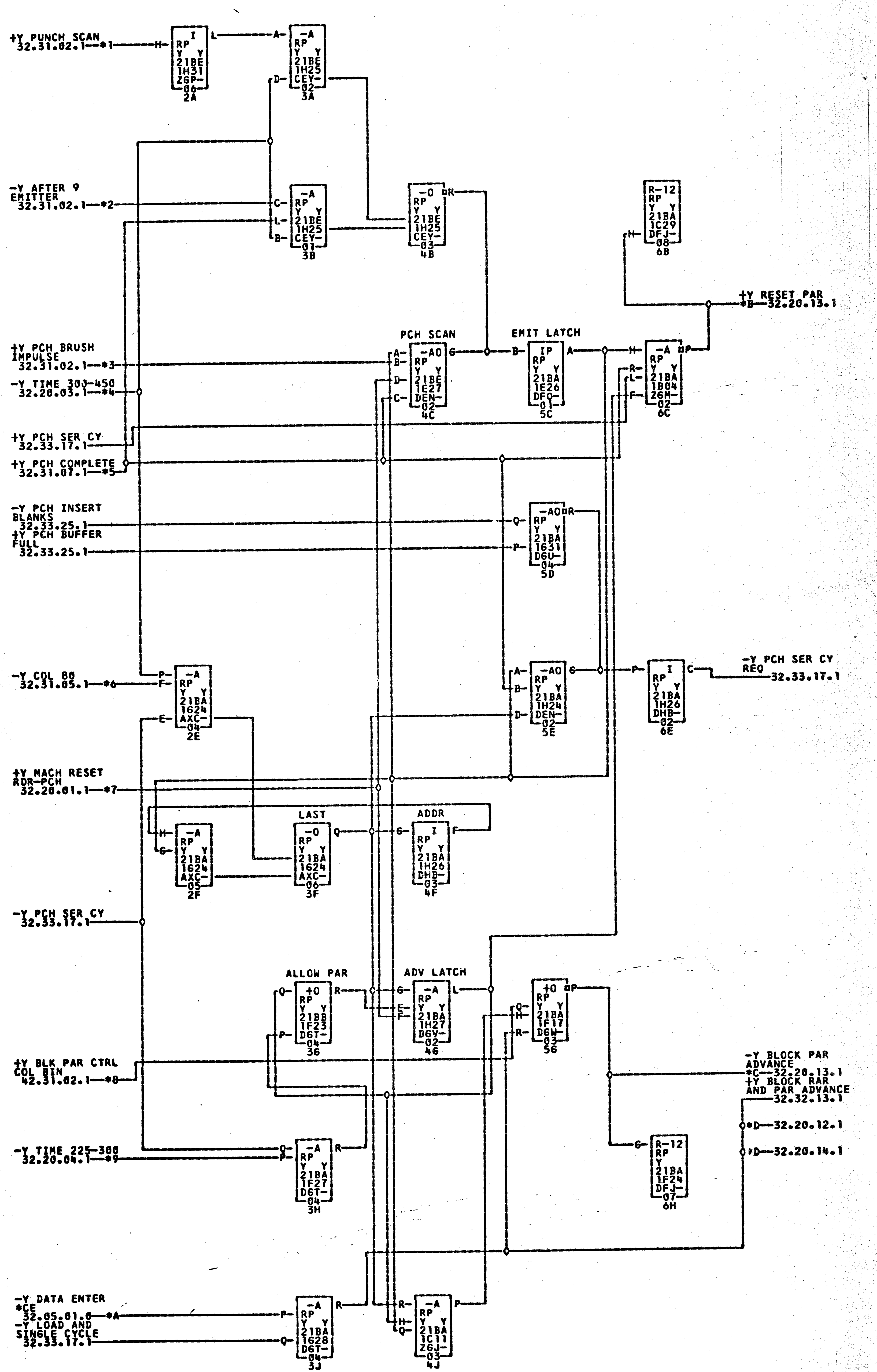
+Y PUNCH SCAN 32.31.02.1—*1
-Y AFTER 9 EMITTER 32.31.02.1—*2
+Y PCH BRUSH IMPULSE 32.31.02.1—*3
-Y TIME 300-450 32.20.03.1—*4
+Y PCH SER CY 32.33.17.1
+Y PCH COMPLETE 32.31.07.1—*5
-Y PCH INSERT BLANKS 32.33.25.1
+Y PCH BUFFER FULL 32.33.25.1
-Y COL 80 32.31.05.1—*6
+Y MACH RESET RDR-PCH 32.20.01.1—*7
-Y PCH SER CY 32.33.17.1
+Y BLK PAR CTRL COL BIN 42.31.02.1—*8
-Y TIME 225-300 32.20.04.1—*9
-Y DATA ENTER *CE 32.05.01.0—*A
-Y LOAD AND SINGLE CYCLE 32.33.17.1
I RP Y Y 21BE 1H31 Z6P- 06 2A
-A RP Y Y 21BE 1H25 CEY- 02 3A
-A RP Y Y 21BE 1H25 CEY- 01 3B
-O RP Y Y 21BE 1H25 CEY- 03 4B
R-12 RP Y Y 21BA 1C29 DFJ- 08 6B
+Y RESET PAR *B—32.20.13.1
PCH SCAN
-AO RP Y Y 21BE 1E27 DEN- 02 4C
EMIT LATCH
IP RP Y Y 21BA 1E26 DFO- 01 5C
-A RP Y Y 21BA 1B04 Z6H- 02 6C
-AO RP Y Y 21BA 1G31 D6U- 04 5D
-A RP Y Y 21BA 1G24 AXC- 04 2E
-AO RP Y Y 21BA 1H24 DEN- 02 5E
I RP Y Y 21BA 1H26 DHB- 02 6E
-Y PCH SER CY REQ 32.33.17.1
-A RP Y Y 21BA 1G24 AXC- 05 2F
LAST
-O RP Y Y 21BA 1G24 AXC- 06 3F
ADDR
I RP Y Y 21BA 1H26 DHB- 03 4F
ALLOW PAR
+O RP Y Y 21BB 1F23 D6T- 04 3G
ADV LATCH
-A RP Y Y 21BA 1H27 D6Y- 02 4G
+O RP Y Y 21BA 1F17 D6W- 03 5G
-Y BLOCK PAR ADVANCE *C—32.20.13.1
+Y BLOCK RAR AND PAR ADVANCE 32.32.13.1
*D—32.20.12.1
*D—32.20.14.1
R-12 RP Y 21BA 1F24 DFJ- 07 6H
-A RP Y Y 21BA 1F27 D6T- 04 3H
-A RP Y Y 21BA 1G28 D6T- 04 3J
-A RP Y Y 21BA 1C11 Z6J- 03 4J

*1—21B1T10A
*7—21B1T17A
*C—21B1T18C

*2—21B1T10C
*8—21B1F32K
—21B3T18C

*3—21B1T11C
*9—21B1T03B
*D—21B1T16B

*4—21B1T02A
*A—21B1H01F
—21B3T16B

*5—21B1T19B
*B—21B1T19A

*6—21B1T13A
—21B3T19A

FSD. 405-507

COMMENTS

TAG	DATE	E.C.NO.	TAG	DATE	E.C.NO.	TAG	DATE	E.C.NO.	TAG	DATE	E.C.NO.
A	09-01-64	121550K	B	11-09-64	121572	C	12-19-64	121583	D	03-18-65	121598
E	08-18-65	124270									

2-1

PUNCH STACKER INHIBIT 1+2 LATCH

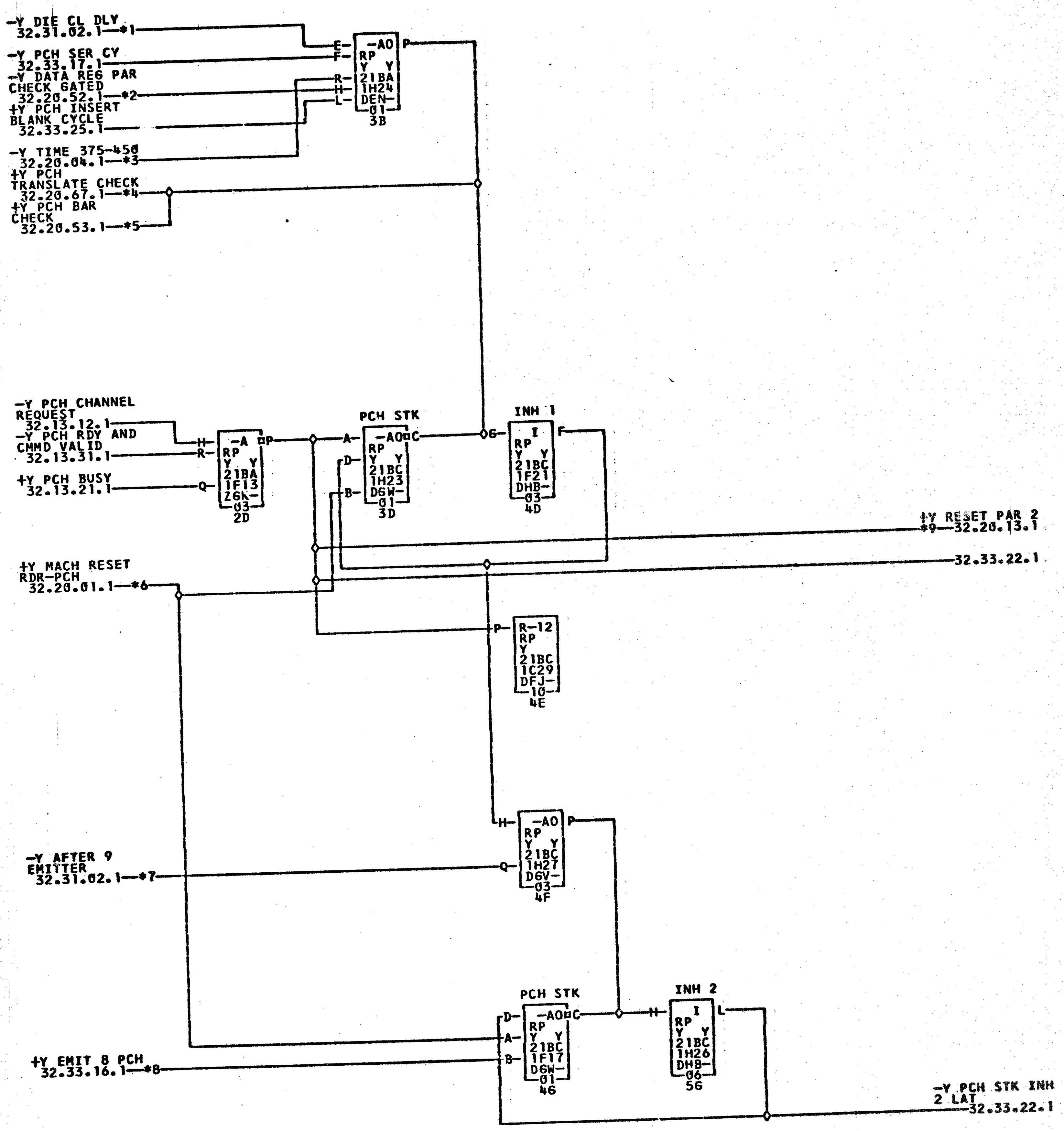
-Y DIE CL DLY
32.31.02.1—*1
-Y PCH SER CY
32.33.17.1
-Y DATA REG PAR
CHECK GATED
32.20.52.1—*2
+Y PCH INSERT
BLANK CYCLE
32.33.25.1
-Y TIME 375-450
32.20.04.1—*3
+Y PCH
TRANSLATE CHECK
32.20.67.1—*4
+Y PCH BAR
CHECK
32.20.53.1—*5
E F R H L
-AO
RP
Y Y
21BA
1H24
DEN
01
3B
P
-Y PCH CHANNEL
REQUEST
32.13.12.1
-Y PCH RDY AND
CMMD VALID
32.13.31.1
+Y PCH BUSY
32.13.21.1
H R Q
-A
RP
Y Y
21BA
1F13
Z6K
03
2D
P
PCH STK
A D B
-AO
RP
Y Y
21BC
1H23
D6W
01
3D
C
INH 1
G
I
RP
Y Y
21BC
1F21
DHB
03
4D
F
+Y RESET PAR 2
*9—32.20.13.1
32.33.22.1
+Y MACH RESET
RDR-PCH
32.20.01.1—*6
P
R-12
RP
Y
21BC
1C29
DFJ
10
4E
H
-AO
RP
Y Y
21BC
1H27
D6V
03
4F
Q
P
-Y AFTER 9
EMITTER
32.31.02.1—*7
PCH STK
D A B
-AO
RP
Y Y
21BC
1F17
D6W
01
46
C
+Y EMIT 8 PCH
32.33.16.1—*8
INH 2
H
I
RP
Y Y
21BC
1H26
DHB
06
56
L
-Y PCH STK INH
2 LAT
32.33.22.1

*1—21B1T11B
*7—21B1T10C

*2—21B1T08B
*8—21B1T14C

*3—21B1T02B
*9—21B1T15C

*4—21B1C32P
—21B3T15C

*5—21B1D01Q

*6—21B1T17A

MDM.3060

COMMENTS

TAG	DATE	E.C.NO.	TAG	DATE	E.C.NO.	TAG	DATE	E.C.NO.	TAG	DATE	E.C.NO.
A	09-01-64	121550K	B	12-19-64	121583	C	06-22-65	124265	D	03-10-66	125633
E	06-23-66	125647									

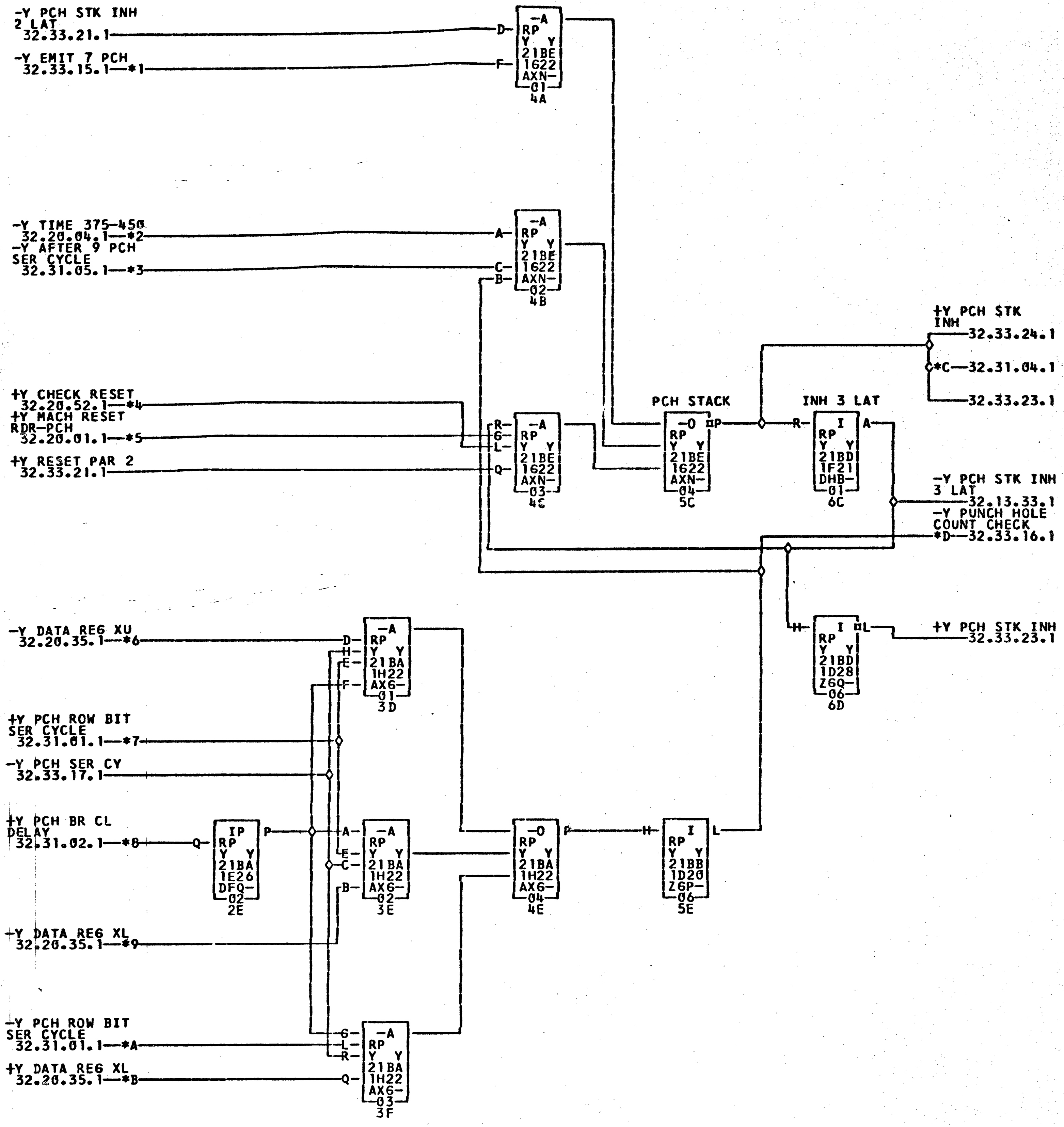
-Y PCH STK INH 2 LAT 32.33.21.1
-Y EMIT 7 PCH 32.33.15.1—*1
-Y TIME 375-450 32.20.04.1—*2
-Y AFTER 9 PCH SER CYCLE 32.31.05.1—*3
+Y CHECK RESET 32.20.52.1—*4
+Y MACH RESET RDR-PCH 32.20.01.1—*5
+Y RESET PAR 2 32.33.21.1
-Y DATA REG XU 32.20.35.1—*6
+Y PCH ROW BIT SER CYCLE 32.31.01.1—*7
-Y PCH SER CY 32.33.17.1
+Y PCH BR CL DELAY 32.31.02.1—*8
+Y DATA REG XL 32.20.35.1—*9
-Y PCH ROW BIT SER CYCLE 32.31.01.1—*A
+Y DATA REG XL 32.20.35.1—*B
-A RP Y Y 21BE 1622 AXN-01 4A
-A RP Y Y 21BE 1622 AXN-02 4B
-A RP Y Y 21BE 1622 AXN-03 4C
PCH STACK
-O RP Y Y 21BE 1622 AXN-04 5C
INH 3 LAT
I RP Y Y 21BD 1F21 DHB-01 6C
+Y PCH STK INH 32.33.24.1
*C—32.31.04.1
32.33.23.1
-Y PCH STK INH 3 LAT 32.13.33.1
-Y PUNCH HOLE COUNT CHECK *D—32.33.16.1
I RP Y Y 21BD 1D28 ZGQ-06 6D
+Y PCH STK INH 32.33.23.1
-A RP Y Y 21BA 1H22 AX6-01 3D
IP RP Y Y 21BA 1E26 DFQ-02 2E
-A RP Y Y 21BA 1H22 AX6-02 3E
-O RP Y Y 21BA 1H22 AX6-04 4E
I RP Y Y 21BB 1D20 ZGP-06 5E
-A RP Y Y 21BA 1H22 AX6-03 3F
D F A C B R G L Q H E P

*1—21B1T23B *2—21B1T02B *3—21B1T12C *4—21B1T24C *5—21B1T17A *6—21B1T07C
*7—21B1T08C *8—21B1T09D *9—21B1T07D *A—21B1T08D *B—21B1T08A *C—21B1T25B
——21B3T25B *D—21B1T15D ——21B3T15D

HDM.3060

COMMENTS

TAG	DATE	E.C.NO.	TAG	DATE	E.C.NO.	TAG	DATE	E.C.NO.	TAG	DATE	E.C.NO.
A	09-01-64	121550K	B	10-15-64	121567	C	12-19-64	121583	D	04-26-65	124237
E	06-22-65	124265	F	04-20-66	125636	G	06-28-67	125674	H	12-18-67	131803

PUNCH STACK SELECT P2

2-1

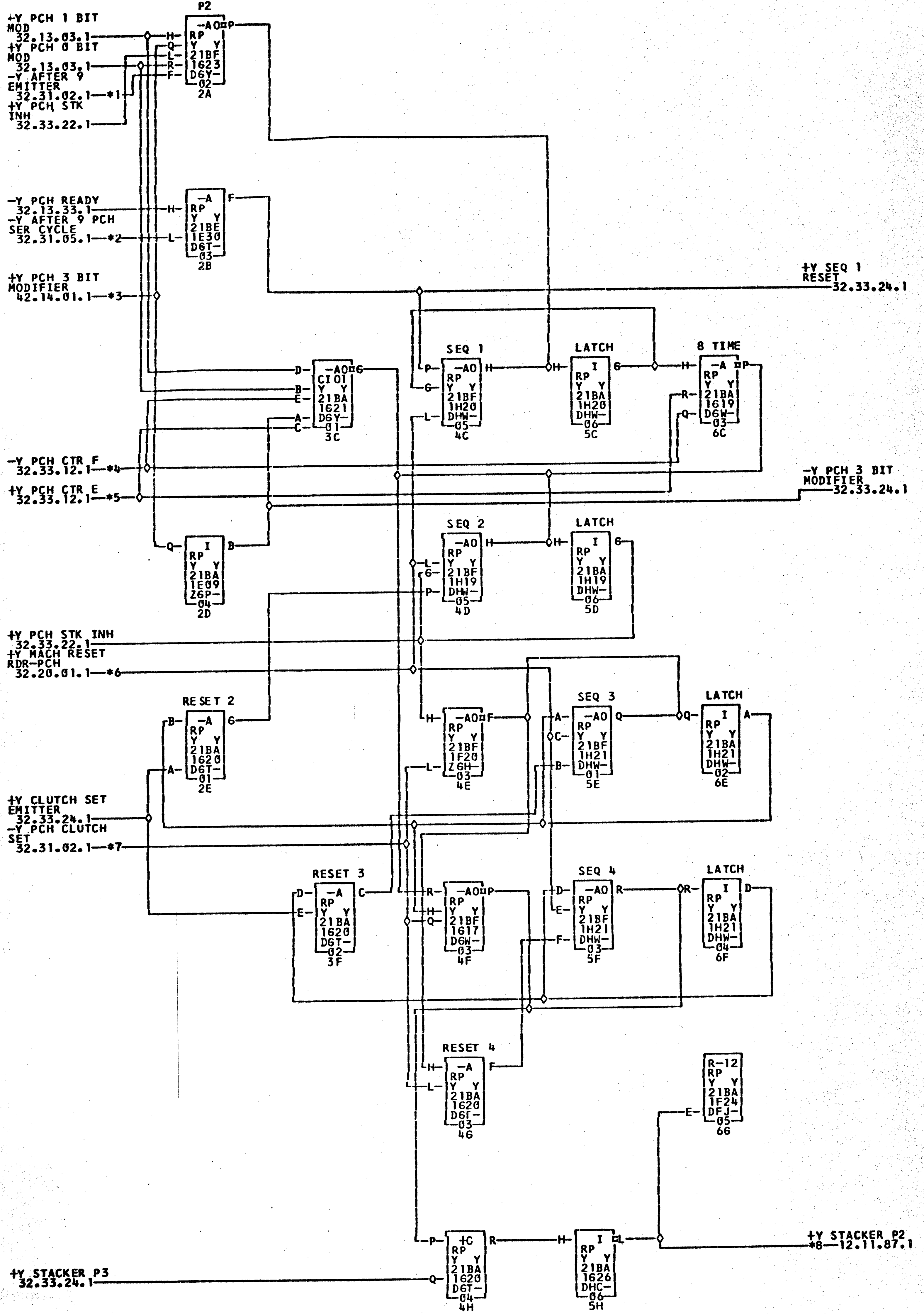
P2
+Y PCH 1 BIT MOD 32.13.03.1
+Y PCH 0 BIT MOD 32.13.03.1
-Y AFTER 9 EMITTER 32.31.02.1—*1
+Y PCH STK INH 32.33.22.1
-AO P
RP
Y Y
21BF
1623
DGY-
02
2A
H Q L R F
-Y PCH READY 32.13.33.1
-Y AFTER 9 PCH SER CYCLE 32.31.05.1—*2
-A F
21BE
1E30
DGT-
03
2B
+Y PCH 3 BIT MODIFIER 42.14.01.1—*3
+Y SEQ 1 RESET 32.33.24.1
-AO G
CI 01
21BA
1621
DGY-
01
3C
D B E A C
SEQ 1
-AO H
21BF
1H20
DHW-
05
4C
P G L
LATCH
I
21BA
1H20
DHW-
06
5C
8 TIME
-A P
21BA
1619
DGW-
03
6C
H R Q
-Y PCH CTR F 32.33.12.1—*4
+Y PCH CTR E 32.33.12.1—*5
-Y PCH 3 BIT MODIFIER 32.33.24.1
I B
21BA
1E09
ZGP-
04
2D
Q
SEQ 2
-AO H
21BF
1H19
DHW-
05
4D
L G P
LATCH
I G
21BA
1H19
DHW-
06
5D
+Y PCH STK INH 32.33.22.1
+Y MACH RESET RDR-PCH 32.20.01.1—*6
RESET 2
-A G
21BA
1620
DGT-
01
2E
B A
-AO F
21BF
1F20
ZGH-
03
4E
H L
SEQ 3
-AO Q
21BF
1H21
DHW-
01
5E
A C B
LATCH
I A
21BA
1H21
DHW-
02
6E
+Y CLUTCH SET EMITTER 32.33.24.1
-Y PCH CLUTCH SET 32.31.02.1—*7
RESET 3
-A C
21BA
1620
DGT-
02
3F
D E
-AO P
21BF
1617
DGW-
03
4F
R H Q
SEQ 4
-AO R
21BF
1H21
DHW-
03
5F
D E F
LATCH
I D
21BA
1H21
DHW-
04
6F
RESET 4
-A F
21BA
1620
DGT-
03
4G
H L
R-12
RP
Y Y
21BA
1F24
DFJ-
05
6G
E
+C R
21BA
1620
DGT-
04
4H
P Q
I L
21BA
1626
DHC-
06
5H
H
+Y STACKER P2 *8—12.11.87.1
+Y STACKER P3 32.33.24.1

*1—21B1T10C
*7—21B1T10D

*2—21B1T12C
*8—21B1T21C

*3—21B1T11D
——21B3T21C

*4—21B1T15B
——21B3H01F

*5—21B1T14B
——21C1C21F

*6—21B1T17A
——40A1C04F

COMMENTS

TAG	DATE	E.C.NO.	TAG	DATE	E.C.NO.	TAG	DATE	E.C.NO.	TAG	DATE	E.C.NO.
A	09-01-64	121550K	B	10-15-64	121567	C	11-09-64	121572	D	12-19-64	121583
E	03-18-65	121598	F	04-26-65	124237	G	06-22-65	124265	H	10-11-65	125598
J	04-20-66	125636	K	06-23-66	125647	L	06-28-67	125674	M	12-18-67	131803

2-1

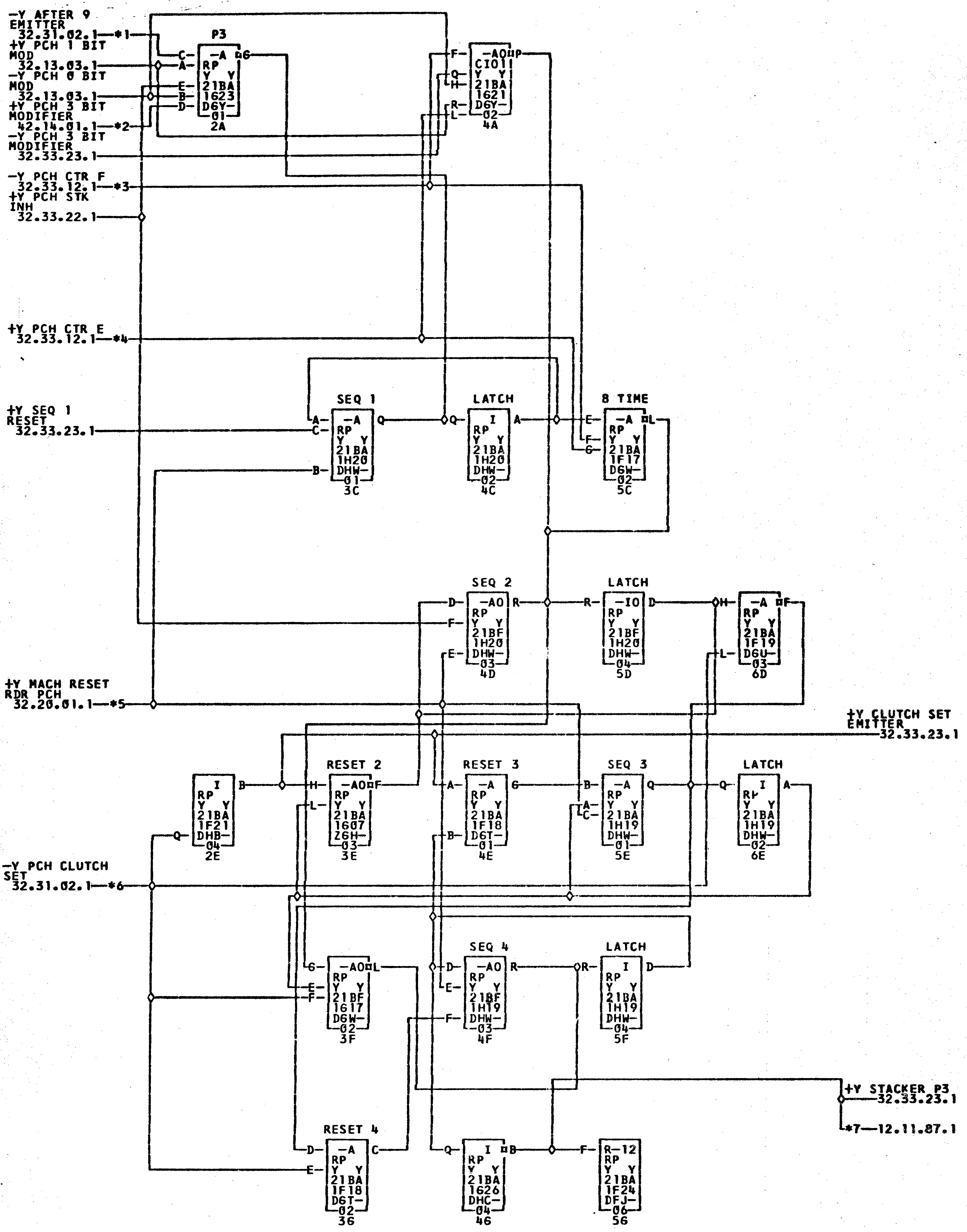
-Y AFTER 9 EMITTER 32.31.02.1—*1
+Y PCH 1 BIT MOD 32.13.03.1
-Y PCH 0 BIT MOD 32.13.03.1
+Y PCH 3 BIT MODIFIER 42.14.01.1—*2
-Y PCH 3 BIT MODIFIER 32.33.23.1
-Y PCH CTR F 32.33.12.1—*3
+Y PCH STK INH 32.33.22.1
P3
-A RP Y Y 21BA 1623 D6Y- 01 2A
-AO CIO1 Y Y 21BA 1621 D6Y- 02 4A
+Y PCH CTR E 32.33.12.1—*4
+Y SEQ 1 RESET 32.33.23.1
SEQ 1
-A RP Y Y 21BA 1H20 DHW- 01 3C
LATCH
I RP Y Y 21BA 1H20 DHW- 02 4C
8 TIME
-A RP Y Y 21BA 1F17 D6W- 02 5C
SEQ 2
-AO RP Y Y 21BF 1H20 DHW- 03 4D
LATCH
-IO RP Y Y 21BF 1H20 DHW- 04 5D
-A RP Y Y 21BA 1F19 D6U- 03 6D
+Y MACH RESET RDR PCH 32.20.01.1—*5
+Y CLUTCH SET EMITTER 32.33.23.1
I RP Y Y 21BA 1F21 DHB- 04 2E
RESET 2
-AO RP Y Y 21BA 1607 Z6H- 03 3E
RESET 3
-A RP Y Y 21BA 1F18 D6T- 01 4E
SEQ 3
-A RP Y Y 21BA 1H19 DHW- 01 5E
LATCH
I RP Y Y 21BA 1H19 DHW- 02 6E
-Y PCH CLUTCH SET 32.31.02.1—*6
-AO RP Y Y 21BF 1617 D6W- 02 3F
SEQ 4
-AO RP Y Y 21BF 1H19 DHW- 03 4F
LATCH
I RP Y Y 21BA 1H19 DHW- 04 5F
+Y STACKER P3 32.33.23.1
*7—12.11.87.1
RESET 4
-A RP Y Y 21BA 1F18 D6T- 02 3G
I RP Y Y 21BA 1626 DHC- 04 4G
R-12 RP Y Y 21BA 1F24 DFJ- 06 5G

*1—21B1T10C
*7—21B1T21D

*2—21B1T11D
———21B3T21D

*3—21B1T15B
———21B3H016

*4—21B1T14B
———21C1B216

*5—21B1T17A
———02A1C046

*6—21B1T10D

COMMENTS

TAG	DATE	E.C.NO.	TAG	DATE	E.C.NO.	TAG	DATE	E.C.NO.	TAG	DATE	E.C.NO.
A	09-01-64	121550K	B	10-15-64	121567	C	11-09-64	121572	D	12-19-64	121583
E	03-18-65	121598	F	04-26-65	124237	G	06-22-65	124265	H	10-11-65	125598
J	06-28-67	125674									

0826649 PUNCH BUFFER BLANK INSERT 2821 RP 32.33.25.1

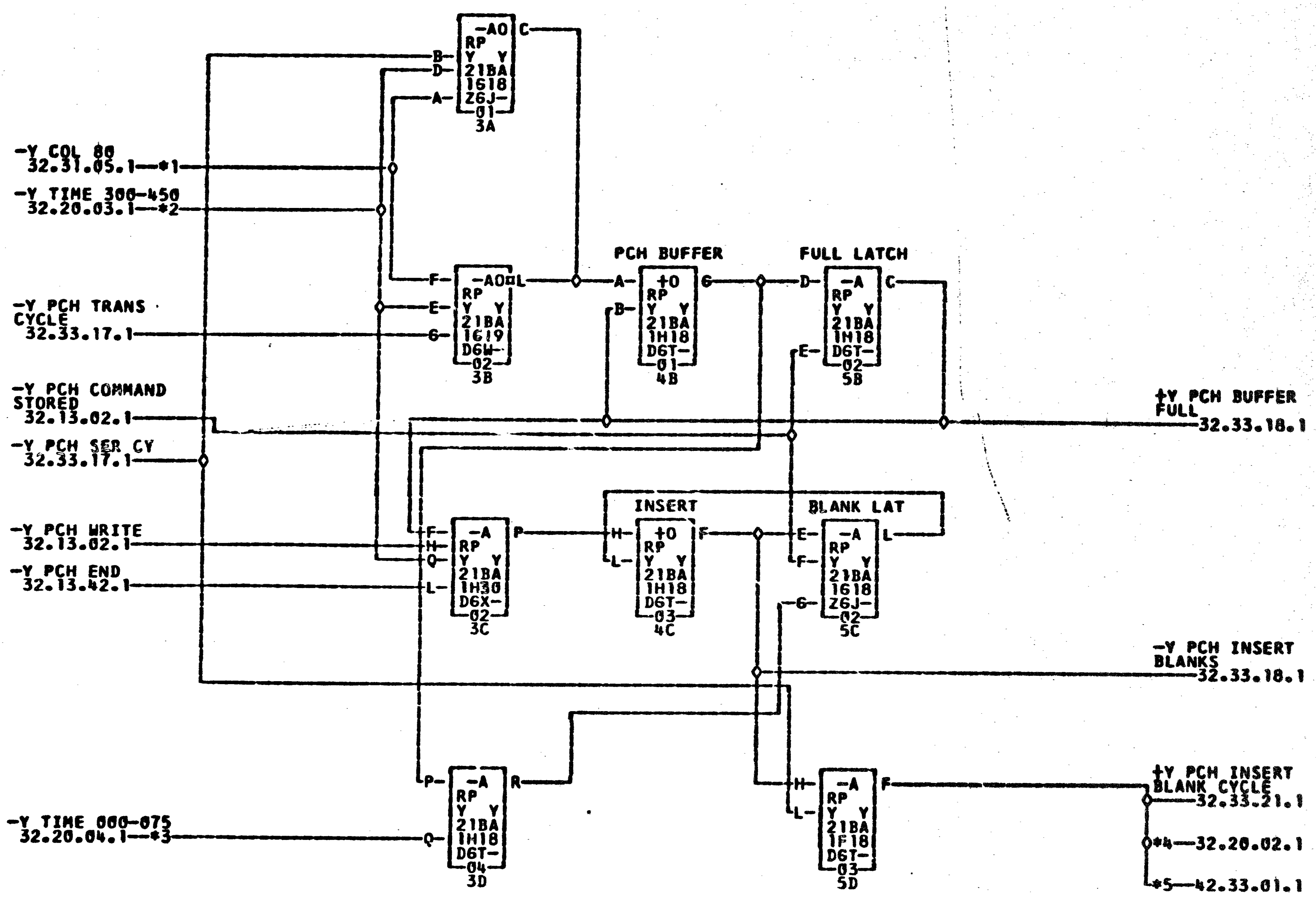
-Y COL 80 32.31.05.1—*1
-Y TIME 300-450 32.20.03.1—*2
-Y PCH TRANS CYCLE 32.33.17.1
-Y PCH COMMAND STORED 32.13.02.1
-Y PCH SER CY 32.33.17.1
-Y PCH WRITE 32.13.02.1
-Y PCH END 32.13.42.1
-Y TIME 000-075 32.20.04.1—*3
-AO RP Y Y 21BA 1G18 Z6J- 01 3A
-AO RP Y Y 21BA 1G19 D6W- 02 3B
PCH BUFFER
+O RP Y Y 21BA 1H18 D6T- 01 4B
FULL LATCH
-A RP Y Y 21BA 1H18 D6T- 02 5B
-A RP Y Y 21BA 1H30 D6X- 02 3C
INSERT
+O RP Y Y 21BA 1H18 D6T- 03 4C
BLANK LAT
-A RP Y Y 21BA 1G18 Z6J- 02 5C
-A RP Y Y 21BA 1H18 D6T- 04 3D
-A RP Y Y 21BA 1F18 D6T- 03 5D
+Y PCH BUFFER FULL 32.33.18.1
-Y PCH INSERT BLANKS 32.33.18.1
+Y PCH INSERT BLANK CYCLE 32.33.21.1
*4—32.20.02.1
*5—42.33.01.1

*1—21B1T13A *2—21B1T02A *3—21B1T02C *4—21B1T10B *5—21B1C32N

COMMENTS

TAG	DATE	E.C.NO.	TAG	DATE	E.C.NO.	TAG	DATE	E.C.NO.	TAG	DATE	E.C.NO.
A	09-01-64	121550K	B	11-09-64	121572	C	12-19-64	121583			