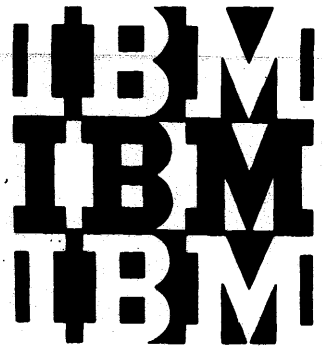

File No. S360-29
Order No. GY28-6800-5

Program Logic

IBM System/360 Operating System

PL/I (F) Compiler

Program Logic Manual

Program Number 360S-NL-511

This manual describes the internal design of the IBM System/360 Operating System PL/I (F) Compiler. It is aimed at personnel responsible for analyzing program operations, diagnosing malfunctions, and changing the program format for special or national language usage. The information provides a guide for effective use of the program listings. Program logic information is not necessary for the use and operation of the program; therefore, distribution of this publication is limited to those described above.

Sixth Edition (December 1971)

This is a minor revision of, and obsoletes, Y28-6800-4 and incorporates Technical Newsletters GN33-6018 and GY33-6017. Changes to the text, and small changes to illustrations, are indicated by a vertical line to the left of the change; changed or added illustrations are denoted by the symbol • to the left of the caption.

This edition applies to Release 20 of IBM System/360 Operating System, and to all subsequent releases until otherwise indicated in new editions or Technical Newsletters. Changes are continually made to the specifications herein; before using this publication in connection with the operation of IBM systems, consult the latest IBM System/360 Bibliography SRL Newsletter, Form N20-0360, for the editions that are applicable and current.

Requests for copies of IBM publications should be made to your IBM representive or the IBM branch office serving your locality.

Address comments concerning the contents of this publication to IBM United Kingdom Laboratories Ltd., Programming Publications, Hursley Park, Winchester, Hampshire, England.

© Copyright International Business Machines Corporation 1966, 1967, 1968, 1969, 1970, 1971

This publication is organized in three chapters. Chapter 1 is an introduction describing the relationship between the compiler and the operating system, and the overall organization of the compiler. Chapter 2 is a general description of each logical phase followed by descriptions of each of the physical phases contained in the logical phase. Chapter 3 consists of flowcharts, tables and routine directories. The flowcharts show the relationship between the routines of each phase, while the tables and directories list the routines and their functions.

The appendixes contain topics of special importance and reference material.

The convention has been followed in this manual of printing all PL/I language items in block capitals.

Prerequisite to the use of this publication are the following:

IBM System/360:

Principles of Operation, Order No. GA22-6821

IBM System/360 Operating System:

PL/I(F) Language Reference Manual, Order No. GC28-8201

PL/I(F) Programmer's Guide, Order No. GC28-6594

Although not prerequisite, the following publications are related to this manual and should be consulted:

IBM System/360 Operating System:

Operator's Reference, Order No. GC28-6691

Operator's Procedures, Order No. GC28-6692

System Programmer's Guide, Order No. GC28-6550

Storage Estimates, Order No. GC28-6551

System Generation, Order No. GC28-6554

Supervisor and Data Management Services, Order No. GC28-6646

Supervisor and Data Management Macro Instructions, Order No. GC28-6647

Sequential Access Methods, Program Logic Manual, Order No. GY28-6604

Introduction to Control Program Logic, Program Logic Manual, Order No. GY28-6605

PL/I Subroutine Library, Program Logic Manual, Order No. GY28-6801

CONTENTS

CHAPTER 1: INTRODUCTION. 15

Purpose of the Compiler. 15

The Compiler and the Operating System. . 15

Compiler Organization. 17

CHAPTER 2: THE COMPILER LOGICAL PHASES . 21

Compiler Control and 48-Character Set Preprocessor. 21
Compiler Control. 21
Initialization 21
Character Translation. 21
Communication Between Phases . . . 21
Text and Dictionary Block Control 21
Block Control Area 22
Text Block Chaining. 22
Scratch Storage Control. 22
Storage Requirements 22
Phase Loading. 23
Phase Directory Construction . . . 23
Diagnostic Message Control 23
Input/Output Control 23
Program Check Handling 23
Job Termination. 23
Compiler Control Modules. 23
Module AC. 23
Module AD. 25
The DUMP Option. 25
Module AE. 25
Module AF. 25
Module AG. 25
Module AH. 26
Modules AI and AJ. 26
Module AK. 26
Module AL. 26
Module AM. 26
Module AN. 26
Module AT. 26
The TRACE/PATCH Option 26
Module F1. . . . . 26.1
Module JZ. 26.1
48-Character Set Preprocessor . . . 26.1

Compile-Time Processor Logical Phase . . 27
Line Numbering 27
Phase AS 27
Phase AV 27
Phase BC (BE, BF). 27
Phase BG (BI, BJ). 28
Phase BM (BO). 28
Module BN (BP, BV) 28
Phase BW 28

The Read-In Logical Phase. 28
Statement Numbering. 29
Statement and Entry Labels 29
Chains Constructed by Read-In. . . 29
Errors and Diagnostic Messages . . 29
The Output String. 30
Identifiers. 30
Constants. 30
Operators. 30
Initial Labels 30
Structure of the Read-In Logical Phase. 30
Phase CI 30
Phase CL 31
Phase CO 31
Phase CS 31
Phase CV 31

The Dictionary Logical Phase 31
Constructing and Accessing the Dictionary. 31
Testing for Consistent Attributes 32
Compiler Pseudo-Variables and Functions 32
Dictionary Entries for Entry Points. 32
Phase ED 33
Phase EG(EF) 33
Phase EI (EH, EJ). 34
Phase EL (EK, EM). 35
Phase EP 35
Phase EW (EV). 36
Phase EY 36
Phase FA 36
Phase FE 37
Phase FI 37
Phase FK 37
Phase FO 37
Phase FQ 38
Phase FT 38
Phase FV 39
Phase FX 39

The Pretranslator Logical Phase. 40
Additions to the Text. 40
Phase GA 41
Phase GB (GC). 41
Phase GK 41
Phase GO 42
Phase GP 42
Phase GU 43
Phase HF 43
Phase HK 43
Phase HP 43

The Translator Logical Phase 43
Phase IA 44
Phase IG 45
Phase IK 45
Phase IL 45
Phase IM 45
Phase IT 45
Phase IX 45
Phase JD 46

The Aggregates Logical Phase 46

Phase JI 46
Phase JK 46
Phase JP 47

The Optimization Logical Phase 47
Phase KA (KB). 48
Phase KC 48
Phase KE 48
Phase KG 48
Phase KJ 49
Phase KN 49
Phase KO (KP,KQ) 49
Phase KT 50
Phase KU(KV) 50

The Pseudo-Code Logical Phase. 50
Pseudo-Code Design 50
Pseudo-Code Items. 50
Register Description 50
The Use of Symbolic Unassigned Registers 51
The Use of Physical Registers. . . 51
Temporary Descriptors. 51
Temporary Workspace. 51
Phase LB 51
Phase LD 52
Phase LG 52
Phase LR 52
Phase LS 52
Phase LV 53
Phase LX (LW, LY). 53
Phase MA 53
Phase MB 54
Phase MD 54
Phase ME 54
Phase MG 54
Phase MI 54
Phase MK 55
Phase ML 55
Phase MM 55
Phase MP 55
Phase MS 55
Phase NA 55
Phase NG 56
Phase NJ 56
Phase NM 57
Phase NT 58
Phase NU 58
Phase OB 59
Phase OD 59
Phase OE 59
Phase OG (OL). 60
Phase OM 60
Phase OP 60
Phase OS 60

The Storage Allocation Logical Phase . . 60
Phase PA 61
Phase PD 61
Phase PH 61
Phase PL 62
Phase PP 62
Phase PT 63
Phase QF 63
Phase QJ 64
Phase QU 65
Phase QX. 65

The Register Allocation Logical Phase. . 66
Phase RA (RB,RC) 66
Phase RD 66
Phase RF (RG,RH) 67

The Final Assembly Logical Phase 67
Phase TF 67
Phase TJ 67
Phase TO (TQ). 67
Phase TT 68
Phase UA 68
Phase UD 69
Phase UE 69
Phase UF (UH). 69

The Error Editor Logical Phase 69
Phase XA 69

CHAPTER 3: FLOWCHARTS, TABLES, AND ROUTINE DIRECTORIES 71

APPENDIX A: GUIDE TO PHASES AND MODULES 379

APPENDIX B: RESIDENT TABLES. 384

Organization of Keyword Tables 384
Format of First Level Directory. .385
Format of Second Level Directory .385
Format of Third Level Tables . . .385
Format of Entry Requiring Additional Comparisons. 385

Phase Directory. 386

APPENDIX C: INTERNAL FORMATS OF DICTIONARY ENTRIES. 387

1. Dictionary Entry Code Bytes 387

2. Dictionary Entries for Entry Points .389
Entry type 1 for PROCEDURE, BEGIN, and ENTRY statements .389
Entry Type 2 391
Entry Type 3 391
SETS List Format 392
Entry Type 4 392
Entry Type 5 393
GENERIC Entry Point. 393

3. Code Bytes for Entry Dictionary Entries 393
ENTRY Code Byte. 393
Options Code Byte. 394
Optimization Byte. 394

4. Dictionary Entries for Data, Label, and Structure Items 394
Label Variables - Obtained from DECLARE Statement 394
Dictionary Entries for Data Items. 395
Major and Minor Structure Entries. 396

5. Code Bytes for DATA, LABEL, and STRUCTURE Dictionary Entries. 397

The First Code Byte - Other 1. . .397
The Second Code Byte - Other 2 . .397
The Third Code Byte - Other 3. . .398
The Fourth Code Byte - Other 4 . .399
Variable Byte. 399
Data Byte. 400

6. Format of Variable Information. . . .400
Uses of the OFFSET1 and OFFSET2 Slots in Data, Label, and Structure Dictionary Entries. . .403
STATIC INTERNAL Structures 403
AUTOMATIC Structures. 403
STATIC EXTERNAL and Parameter Structures. 403
CONTROLLED Structures. 403
Non-Structured Arrays in STATIC INTERNAL 403
Non-Structured Arrays in AUTOMATIC. 403
STATIC EXTERNAL, CONTROLLED or Parameter Array 403
Non-Structured Scalar Strings in STATIC INTERNAL 403
Non-Structured Scalar Strings in AUTOMATIC. 404
Non-Structured Scalar Strings in STATIC EXTERNAL, CONTROLLED or Parameter. . . .404
Non-Structured Non-String Scalars in AUTOMATIC or STATIC INTERNAL 404
Non-Structured Non-String Scalars in STATIC EXTERNAL, CONTROLLED or Parameter 404

7. Other Dictionary Entries. 404
Label Constants - Extracted by the Read-In Phase. 404
Compiler Labels 404
Formal parameter type 1 entry. 404
Dictionary entry for FILE . . .405
FILE Constants 405
FILE Parameters and Temporaries. .405
FILE Environment Entries 405
Dictionary Entries from Constants 405
Task Identifiers and EVENT Data 406
Dictionary Entries for Built-in Functions. 406
Second Code Byte 407
Internal Library Functions 407
BCD entries. 407
Dictionary Entry for Parameter Descriptions. 407
ON Statements. 407
ON Condition 408
CHECK List Entry 408
PICTURE Entry. 408
Byte 9 - Code Byte 408
Dictionary Entry for Workspace Requirement 409
Dictionary Entry for Parameter Lists 409
Dictionary Entries for Dope Vector Skeletons. 409
Symbol Table Entry 409
Dictionary Entry for AUTOMATIC Chain Delimiter 409
DED Dictionary Entry 410
DED2 Entries 410
Dictionary Entry for FED - Format Element Descriptor .410
Label BCD Entries. 410
Dope Vector Entries for Temporaries 410
Record Dope Vector Entry 411
Dope Vector Descriptor Entry . . .411
Format of a Second File Dictionary Entry. 411
Dictionary Entry for a STATIC DSA 411
Dictionary Entry for an Error Message 411

8. Dimension Table 412

9. Dictionary Entries for Initial Values. 412
INITIAL Value List 413

APPENDIX D: INTERNAL FORMATS OF TEXT . .414

1. Text Code Byte after the Read-In Phase 415
First Level Table (00 to 7F) . . .415
First Level Table (80 to FF) . . .416
Second Level Table (00 to 7F) (preceded by second level marker byte C8) 417
Second Level Table (80 to FF). . .418

2. Text Formats After The Read-In Phase 418
PROCEDURE Statement 418
ENTRY Statement. 419
BEGIN Statement. 419
END Statement. 419
IF Statement 420
DO Statement 420
ON Statement 420
ASSIGN Statement 420
WAIT Statement. 421
CALL Statement. 421
GO TO Statement. 421
SIGNAL and REVERT Statements. .422
DISPLAY Statement 422
DELAY Statement. 422
RETURN Statement 422
STOP, EXIT, and Null Statements. .422
INITIAL Label DECLARE Statements .423
DECLARE and ALLOCATE Statements. .423
FORMAT Statements. 423
OPEN and CLOSE Statements. 423
READ, WRITE, GET, PUT, REWRITE, UNLOCK, and DELETE Statements . .423

3. Text Code Bytes on Entry to the Translator Phases 424

4. Format of Triples 426

5. Text Code Bytes in Pseudo-Code. . . .429

6. Text Formats in Pseudo-Code 429
Pseudo-code Design 429
RX Instructions. 430
RS Instructions. 431
RR Instructions. 431
SI Instructions. 431
SS Instructions 431
Variable Length Item FLAG . . .431
Compiler Function (Bit 1=1). . . .432
Pseudo-code Format between IEMRA and IEMRF 432

7. Text Formats in Absolute Code 433
RR Instructions. 433
RX Instructions. 433
SS Instructions. 433
RS Instructions. 433
SI Instructions. 433

8. Second File Statements, and the Formats of Compiler Functions and Pseudo-Variables. 434
Second File Statements 434
Array Bounds 434
Multiplier Function. 434
String Length statement. 435
INITIAL value statements 435
Second File Statements for BASED and OFFSET. 436
Second File Statements for DEFINED. 436

9. Pseudo-Code Phase Temporary Result Descriptors (TMPD). 436
Temporary Description Stack. . .436
Temporary Descriptions in Pseudo-Code 438

10. Library Calling Sequences. 438

11. Descriptions of Terms and Abbreviations used in Text During a Compilation 439

APPENDIX E: STORAGE REQUIREMENTS. . .449
Compiler Requirements and Dictionary/Text Block Relationship. 450

APPENDIX F: COMMUNICATIONS REGION . .451

APPENDIX G: SYSTEM GENERATION. 458

APPENDIX H: CODE PRODUCED FOR PROLOGUES AND EPILOGUES 460
Prologues and Epilogues 460

DSA Optimization 464

APPENDIX I: DIAGNOSTIC MESSAGES. 466

APPENDIX J: COMPILE-TIME PROCESSOR . . .474

1. Internal Formats of Text. 474
Format of a Dictionary Entry . . .474
Format of an Identifier Value Block (IVB) 475
Instruction Codes for the Compile-time processor. 476

2. Communications Region Use 479

3. Compile-time Processor, Operating System, and Compiler Control Interfaces. 482

APPENDIX K: TABLE HANDLING ROUTINES FOR K PHASES. 483

Description and Format of Macro-Instructions. 483
The IEMKTCA Macro. 483
Description of Parameters. 484
The IEMKTAB Macro. 485
Description of Keyword Parameters. 486
Description of Table Handling Operations. 487
Selective Scanning Facilitiy . . .487

APPENDIX L: CONTROL ROUTINES 488

Compiler Control Routines. 489

INDEX. 503

FIGURES

Figure 1. Compiler Data Flow and Data Sets Used 16
Figure 2. Compiler Logical Phases (Part 1 of 2) 18
Figure 2. Compiler Logical Phases (Part 2 of 2) 19
Figure 3. Compiler Organization and Control 20
Figure 4. Input/Output Usage Table . . . 24
Figure 5. Storage Map for the Read-In Phase 30
Figure 6. Dictionary Entries for an Internal Entry Point. 33
Figure 7. PL/I Phase-in-Storage Map. . .383
Figure 8. Organization of Read-In Phase 384
Figure 9. Organization of Keyword Table 385
Figure 10. Decision to Include a Second Offset Slot. 402
Figure 11. Dimension Table 412
Figure 12. Temporary Descriptions in Pseudo-Code -- Use of TMPD Triple Fields F5 and F6. 437
Figure 13. The IEMAF Control Section . .458
Figure 14. Bit Identification Table . .459

Table AA. Module AA Compiler Control Resident Control Phase. 75
Table AA1. Module AA Routine/Subroutine Directory. 76
Table AB. Module AB Compiler Control Initialization. 78
Table AB1. Module AB Routine/Subroutine Directory. 79
Table AC. Module AC Compiler Control Intermediate File Control 79
Table AD. Module AD Compiler Control Interphase Dumping. 79
Table AD1. Module AD Routine/Subroutine Directory. 79
Table AE. Module AE Compiler Control Clean-Up Phase. 80
Table AE1. Module AE Routine/Subroutine Directory. 80
Table AF. Module AF Compiler Control Sysgen Options. 80
Table AG. Module AG Compiler Control Intermediate File Switching 80
Table AK. Module AK Compiler Control Closing Phase 80
Table AL/AN. Modules AL/AN Extended Dictionary/Dictionary Phases. 81
Table AL1/AN1. Modules AL/AN Routine/Subroutine Directory. 85
Table AM. Module AM Compiler Control Phase Marking 86
Table AT. Module AT Compiler Debugging Module. 86
Table AT1. Module AT Routine/Subroutine Directory. 86.1
Table AS. Phase AS Resident Phase for Compile-time Processing 94
Table AS1. Phase AS Routine/subroutine Directory 95
Table AV. Phase AV Macro Processing Initialization. 96
Table AV1. Phase AV Routine/Subroutine Directory 96
Table BC. Phase BC Initial Scan and Translation 97
Table BC1. Phase BC Routine/Subroutine Directory 98
Table BG. Phase BG Final Scan and Replacement 99
Table BG1. Phase BG Routine/subroutine Directory 100
Table BG1. Phase BG Routine/subroutine Directory (cont'd). 101
Table BM. Phase BM Diagnostic Message Determination and Printing. 102
Table BM1. Phase BM Routine/Subroutine Directory 102
Table BW. Phase BW Clean-up Phase. . . .103
Table BX. Phase BX 48-Character Set Preprocessor. 111
Table CA. Module CA Read-In Common Block 1 112
Table CA1. Module CA Routine/Subroutine Directory. 112
Table CC. Module CC Read-In Common Block 2 113
Table CC1. Module CC Routine/Subroutine Directory. 113
Table CE. Modules CE, CK, CN, and CR Read-In Keyword Block 113
Table CI. Phase CI Read-In First Pass. .114
Table CI1. Phase CI Routine/Subroutine Directory 114
Table CL. Phase CL Read-In Second Pass .115
Table CL1. Phase CL Routine/Subroutine Directory 115
Table CO. Phase CO Read-In Third Pass. .116
Table CO1. Phase CO Routine/Subroutine Directory 116
Table CS. Phase CS Read-In Fourth Pass .117
Table CS1. Phase CS routine/Subroutine Directory 117
Table CV. Phase CV Read-In Fifth Pass. .118
Table CV1. Phase CV Routine/Subroutine Directory 118
Table ED. Phase ED, Initialization . . .135
Table ED1. Phase ED Routine/Subroutine Directory 135
Table EG. Phase EG Dictionary Initialization. 135
Table EG1. Phase EG Routine/Subroutine Directory 136
Table EI. Phase EI Dictionary Declare Pass One. 137
Table EI1. Phase EI Routine/Subroutine Directory 138
Table EL. Phase EL Dictionary Declare Pass Two. 140
Table EL1. Phase EL Routine/Subroutine Directory 141
Table EP. Phase EP Dictionary Entry III and Call. 143
Table EP1. Phase EP Routine/Subroutine Directory 144
Table EW. Phase EW Dictionary LIKE . . .145
Table EW1. Phase EW Routine/Subroutine Directory 145
Table EY. Phase EY Dictionary ALLOCATE .146
Table EY1. Phase EY Routine/Subroutine Directory 146
Table FA. Phase FA Dictionary Context. .147
Table FA1. Phase FA Routine/Subroutine Directory 148
Table FE. Phase FE Dictionary BCD to Dictionary Reference. 149
Table FE1. Phase FE Routine/Subroutine Directory 150
Table FI. Phase FI Dictionary Checking .150
Table FI1. Phase FI Routine/Subroutine Directory 151
Table FK. Phase FK Dictionary Attribute 152
Table FK1. Phase FK Routine/Subroutine Directory 152

Table FO. Phase FO Dictionary ON 153
Table FO1. Phase FO Routine/Subroutine Directory 153
Table FQ. Phase FQ Dictionary Picture Processor 154
Table FQ1. Phase FQ Routine/Subroutine Directory 155
Table FT. Phase FT Dictionary Scan . . .156
Table FT1. Phase FT Routine/Subroutine Directory 157
Table FV. Phase FV Dictionary Second File Merge. 158
Table FV1. Phase FV Routine/Subroutine Directory 159
Table FX. Phase FX Dictionary Attributes and Cross Reference. 160
Table FX1. Phase FX Routine/Subroutine Directory 161
Table F1. Module F1 Compiler Control. .161
Table GA. Phase GA DCLCB Generation. . .171
Table GA1. Phase GA Routine/Subroutine Directory 171
Table GB. Phase GB Pretranslator I/O Modification. 172
Table GB1. Phase GA Routine/Subroutine Directory 173
Table GK. Phase GK Pretranslator Parameter Matching 1. 174
Table GK1. Phase GK Routine/Subroutine Directory 174
Table GO. Phase GO Preprocessor Parameter Matching 2. 175
Table GO1. Phase GO Routine/Subroutine Directory 175
Table GP. Phase GP Pretranslator Parameter Matching 2. 176
Table GP1. Phase GP Routine/Subroutine Directory 177
Table GU. Phase GU Pretranslator Check List. 179
Table GU1. Phase GU Routine/Subroutine Directory 180
Table HF. Phase HF Pretranslator Structure Assignment. 181
Table HF1. Phase HF Routine/Subroutine Directory 182
Table HK. Pretranslator Array Assignment. 183
Table HK1. Phase HK Routine/Subroutine Directory 183
Table HP. Phase HP Pretranslator iSub Defining. 184
Table HP1. Phase HP Routine/Subroutine Directory 184
Table IA. Phase IA Translator Stacker. .194
Table IA1. Phase IA Routine/Subroutine Directory 194
Table IG. Phase IG Translator Pre-Generic 195
Table IG1. Phase IG Routine/Subroutine Directory 195
Table IK. Phase IK Translator Pre-Generic 196
Table IL. Phase IL Translator Pre-Generic 196
Table IM. Phase IM Translator Generic. .196
Table IM1. Phase IM Routine/Subroutine Directory 197
Table IT. Phase IT Post-Generic Processor 198
Table IT1. Phase IT Routine/Subroutine Directory 199
Table IX. Phase IX Pointer and Area Checking. 199
Table IX1. Phase IX Routine/Subroutine Directory 199
Table JD. Phase JD Constant Expression Evaluator 200
Table JD1. Phase JD Routine/Subroutine Directory 200
Table JI. Phase JI Aggregates Structure Processor 205
Table JI1. Routine/Subroutine Directory 205
Table JK. Phase JK Aggregates Structure Processor 206
Table JK1. Phase JK Routine/Subroutine Directory 207
Table JP. Phase JP Translator Defined Check 208
Table JP1. Phase JP Routine/Subroutine Directory 208
Table JZ. Module JZ Compiler Control . .208
Table KA. Phase KA Resident Control Module. 220
Table KA1. Phase KA Routine/Subroutine Directory 220
Table KC. Phase KC Do-Loop Specification Scan. 221
Table KC1. Phase KC Routine/Subroutine Directory. 221
Table KE. Phase KE Dictionary Scan and DO-Map Build. 221
Table KE1. Phase KE Routine/Subroutine Directory 222
Table KG. Phase KG DO Examine Phase . .222
Table KG1. Phase KG Routine/Subroutine Directory. 222
Table KJ. Phase KJ Subscript Table Build 223
Table KJ1. Phase KJ Routine/Subroutine Directory 223
Table KN. Phase KN Subscript Optimization. 224
Table KN1. Phase KN Routine/Subroutine Directory. 224
Table KO. Phase KO Subscript Optimization. 225
Table KO1. Phase KO Routine/Subroutine Directory 230
Table KT. Phase KT Pseudo-Code Scan. . .232
Table KT1. Phase KT Routine/Subroutine Directory 233
Table KU. Phase KU DO-loop Control and Merge Patches 234
Table KU1. Phase KU Routine/Subroutine Directory 236
Table LB. Phase LB Pseudo-Code Initial .268
Table LB1. Phase LB Routine/Subroutine Directory 268
Table LD. Phase LD Pseudo-Code Initial .269
Table LD1. Phase LD Routine/Subroutine Directory 269

Table LG. Phase LG Pseudo-Code DO Expansion 270
Table LG1. Phase LG Routine/Subroutine Directory 271
Table LS. Phase LS Pseudo-Code Expression Evaluation 272
Table LS1. Phase LS Routine/Subroutine Directory 273
Table LV. Phase LV Pseudo-Code String Utilities 274
Table LV1. Phase LV Routine/Subroutine Directory 274
Table LX. Phase LX Pseudo-Code String Handling. 275
Table LX1. Phase LX Routine/Subroutine Directory 276
Table MA. Phase MA Pseudo-code Translate and Verify Functions. 277
Table MA1. Phase MA Routine/Subroutine Directory 278
Table MB. Phase MB Pseudo-code Pseudo-Variables. 279
Table MB1. Phase MB Routine/Subroutine Directory 280
Table MD. Phase MD Pseudo-Code In-Line Functions 281
Table MD1. Phase MD Routine/Subroutine Directory 281
Table ME. Phase ME Pseudo-Code In-Line Functions 282
Table ME1. Phase ME Routine/Subroutine Directory 282
Table MG. Phase MG Pseudo-Code In-Line Functions 1 284
Table MG1. Phase MG Routine/Subroutine Directory 284
Table MI. Phase MI Pseudo-Code In-Line Functions 2 287
Table MI1. Phase MI Routine/Subroutine Directory 287
Table MK. Phase MK Pseudo-Code In-Line Functions 3 288
Table MK1. Phase MK Routine/Subroutine Directory 288
Table ML. Phase ML Pseudo-Code Calls and Functions 289
Table ML1. Phase ML Routine/Subroutine Directory 289
Table MM. Phase MM Pseudo-Code Calls and Functions 289
Table MM1. Phase MM Routine/Subroutine Directory 290
Table MP. Phase MP Pseudo-Code BUY Reorder 291
Table MP1. Phase MP Routine/Subroutine Directory 291
Table MS. Phase MS Pseudo-Code Subscripts. 292
Table MS1. Phase MS Routine/Subroutine Directory 293
Table NA. Phase NA Pseudo-Code Branches, ON, Returns 294
Table NA1. Phase NA Routine/Subroutine Directory 295
Table NG. Phase NG Pseudo-Code Operating System Services 297
Table NG1. Phase NG Routine/Subroutine Directory 297
Table NJ. Phase NJ Pseudo-Code RECORD I/O 298
Table NJ1. Phase NJ Routine/Subroutine Directory 302
Table NM. Phase NM Pseudo-Code Executable I/O. 304
Table NM1. Phase NM Routine/Subroutine Directory 304
Table NT. Phase NT Pseudo-Code Data and Format. 305
Table NT1. Phase NT Routine/Subroutine Directory 305
Table NU. Phase NU Pseudo-Code Data and Format Lists. 306
Table NU1. Phase NU Routine/Subroutine Directory 306
Table OB. Phase OB Pseudo-Code Compiler Functions. 307
Table OB1. Phase OB Routine/Subroutine Directory 309
Table OD. Phase OD Pseudo-Code Assignment. 310
Table OD1. Phase OD Routine/Subroutine Directory 310
Table OE. Phase OE Pseudo-Code Assignment. 311
Table OE1. Phase OE Routine/Subroutine Directory 311
Table OG. Phase OG Library Calling Sequences 312
Table OG1. Phase OG Routine/Subroutine Directory 313
Table OM. Phase OM In-line Data Conversions 314
Table OM1. Phase OM Routine/Subroutine Directory 314
Table OP. Phase OP Further In-line Conversions 315
Table OP1. Phase OP Routine/Subroutine Directory 315
Table OS. Phase OS Constant Conversions 316
Table OS1. Phase OS Routine/Subroutine Directory 316
Table PA. Phase PA DSAs in STATIC Storage 329
Table PA1. Phase PA Routine/Subroutine Directory 329
Table PD. Phase PD Storage Allocation Static 1. 330
Table PD1. Phase PD Routine/Subroutine Directory 330
Table PH. Phase PH Storage Allocation Static 2. 331
Table PH1. Phase PH Routine/Subroutine Directory 332
Table PL. Phase PL Storage Allocation Symbol Table and DEDs 333
Table PL1. Phase PL Routine/Subroutine Directory 333
Table PP. Phase PP Storage Allocation Sort of AUTOMATIC Chain 334
Table PP1. Phase PP Routine/Subroutine Directory 335
Table PT. Phase PT Storage Allocation AUTOMATIC Storage 336
Table PT1. Phase PT Routine/Subroutine Directory 337

Table QF. Phase QF Storage Allocation Prologues 338
Table QF1. Phase QF Routine/Subroutine Directory 339
Table QJ. Phase QJ Storage Allocation Dynamic Storage 340
Table QJ1. Phase QJ Routine/Subroutine Directory 341
Table QU. Phase QU Alignment Processor .342
Table QU1. Phase QU Routine/Subroutine Directory 343
Table QX. Phase QX Print Aggregate Length Table. 344
Table QX1. Phase QX Routine/Subroutine Directory 344
Table RA. Phase RA Register Allocation Addressibility Analysis 349
Table RA1. Phase RA Routine/Subroutine Directory 350
Table RD. Phase RD Use Determination of all EQUs 351
Table RD1. Phase RD Routine/Subroutine Directory. 352
Table RF. Phase RF Register Allocation Physical Registers. 353
Table RF1. Phase RF Routine/Subroutine Directory 353
Table TF. Phase TF Final Assembly Pass 1 365
Table TF1. Phase TF Routine/Subroutine Directory 365
Table TJ. Phase TJ Final Assembly Optimization. 366
Table TJ1. Phase TJ Routine/Subroutine Directory 366
Table TO. Phase TO Final Assembly External Symbol Dictionary. 367
Table TO1. Phase TO Routine/Subroutine Directory 367
Table TT. Phase TT Final Assembly Pass 2 368
Table TT1. Phase TT Routine/Subroutine Directory 369
Table UA. Phase UA Final Assembly Initial Values, Pass 1. 370
Table UA1. Phase UA Routine/Subroutine Directory 371
Table UD. Phase UD Final Assembly Pseudo-Code Static DSA's. 372
Table UD1. Phase UD Routine/Subroutine Directory 372
Table UE. Phase UE Final Assembly Initial Values, Pass 2. 373
Table UE1. Phase UE Routine/Subroutine Directory 374
Table UF. Phase UF Final Assembly Object Listing. 375
Table UF1. Phase UF Routine/Subroutine Directory 376
Table XA. Phase XA Error Message Editor. 378
Table XA1. Phase XA Routine/Subroutine directory 378
Table 1. Communications Region 452
Table 2. Communications Region 454
Table 3. Communications Region. Bit Usage in ZFLAGS 456
Table 4. Communications Region. Bit usage in CCCODE.. 457

Chart 00. Overall Compiler Flowchart . . 72
Chart AA. Resident Control Phase Logic Diagram (Modules AA through AM, and JZ) 74
Chart AT. Phase AT Overall Logic Diagram 74.1
Chart 01. Compile-time Processor Logical Phase Flowchart 87
Chart AS. Phase AS Overall Logic Diagram 88
Chart AV. Phase AV Overall Logic Diagram 89
Chart BC. Phase BC Overall Logic Diagram 90
Chart BG. Phase BG Overall Logic Diagram 91
Chart BM. Phase BM Overall Logic Diagram 92
Chart BW. Phase BW Overall Logic Diagram 93
Chart 02. Read-In Logical Phase Flowchart 104
Chart BX. Phase BX Overall Logic Diagram 105
Chart CI. Phase CI Overall Logic Diagram 106
Chart CL. Phase CL Overall Logic Diagram 107
Chart CO. Phase CO Overall Logic Diagram 108
Chart CS. Phase CS Overall Logic Diagram 109
Chart CV. Phase CV Overall Logic Diagram 110
Chart 03. Dictionary Logical Phase Flowchart 119
Chart EG. Phase EG Overall Logic Diagram 120
Chart EI. Phase EI Overall Logic Diagram 121
Chart EL. Phase EL Overall Logic Diagram 122
Chart EP. Phase EP Overall Logic Diagram 123
Chart EW. Phase EW Overall Logic Diagram 124
Chart EY. Phase EY Overall Logic Diagram 125
Chart FA. Phase FA Overall Logic Diagram 126
Chart FE. Phase FE Overall Logic Diagram 127
Chart FI. Phase FI Overall Logic Diagram 128
Chart FK. Phase FK Overall Logic Diagram 129
Chart FO. Phase FO Overall Logic Diagram 130
Chart FQ. Phase FQ Overall Logic Diagram 131
Chart FT. Phase FT Overall Logic Diagram 132
Chart FV. Phase FV Overall Logic Diagram 133
Chart FX. Phase FX Overall Logic Diagram 134
Chart 04. Pretranslator Logical Phase Flowchart 162
Chart GA. Phase GA Overall Logic Diagram 163
Chart GB. Phase GB Overall Logic Diagram 164
Chart GK. Phase GK Overall Logic Diagram 165
Chart GP. Phase GP Overall Logic Diagram 166
Chart GU. Phase GU Overall Logic Diagram 167
Chart HF. Phase HF Overall Logic Diagram 168
Chart HK. Phase HK Overall Logic Diagram 169
Chart HP. Phase HP Overall Logic Diagram 170
Chart 05. Translator Logical Phase Flowchart 185
Chart IA. Phase IA Overall Logic Diagram 186
Chart IG. Phase IG Overall Logic Diagram 187
Chart IK. Phase IK Overall Logic Diagram 188
Chart IL. Phase IL Overall Logic Diagram 189
Chart IM. Phase IM Overall Logic Diagram 190
Chart IT. Phase IT. Overall Logic Diagram 191
Chart IX. Phase IX Overall Logic Diagram 192
Chart JD. Phase JD Overall Logic Diagram 193
Chart 06. Aggregates Logical Phase Flowchart 201
Chart JI. Phase JI Overall Logic Diagram 202
Chart JK. Phase JK Overall Logic Diagram 203
Chart JP. Phase JP Overall Logic Diagram 204
Chart 07. Optimization Logical Phase Flowchart 209
Chart KA. Phase KA Overall Logic Diagram 210
Chart KC. Phase KC Overall Logic Diagram 212
Chart KE. Phase KE Overall Logic Diagram 213
Chart KG. Phase KG Overall Logic Diagram 214
Chart KJ. Phase KJ Overall Logic Diagram 215
Chart KN. Phase KN Overall Logic Diagram 216

Chart KO. Phase KO Overall Logic Diagram 217
Chart KT. Phase KT Overall Logic Diagram 218
Chart KU. Phase KU Overall Logic Diagram 219
Chart 08. Pseudo-Code Logical Phase Flowchart 237
Chart LB. Phase LB Overall Logic Diagram 238
Chart LD. Phase LD Overall Logic Diagram 239
Chart LG. Phase LG Overall Logic Diagram 240
Chart LS. Phase LS Overall Logic Diagram 241
Chart LV. Phase LV Overall Logic Diagram 242
Chart LX. Phase LX Overall Logic Diagram 243
Chart MA. Phase MA Overall Logic Diagram 244
Chart MB. Phase MB Overall Logic Diagram 245
Chart MD. Phase MD Overall Logic Diagram 246
Chart ME. Phase ME Overall Logic Diagram 247
Chart MG. Phase MG Overall Logic Diagram 248
Chart MI. Phase MI Overall Logic Diagram 249
Chart MK. Phase MK Overall Logic Diagram 250
Chart ML. Phase ML Overall Logic Diagram 251
Chart MM. Phase MM Overall Logic Diagram 252
Chart MP. Phase MP Overall Logic Diagram 253
Chart MS. Phase MS Overall Logic Diagram 254
Chart NA. Phase NA Overall Logic Diagram 255
Chart NG. Phase NG Overall Logic Diagram 256
Chart NJ. Phase NJ Overall Logic Diagram 257
Chart NM. Phase NM Overall Logic Diagram 258
Chart NT. Phase NT Overall Logic Diagram 259
Chart NU. Phase NU Overall Logic Diagram 260
Chart OB. Phase OB Overall Logic Diagram 261
Chart OD. Module OD Overall Logic Diagram 262
Chart OE. Phase OE Overall Logic Diagram 263
Chart OG. Phase OG Overall Logic Diagram 264
Chart OM. Phase OM Overall Logic Diagram 265
Chart OP. Phase OP Overall Logic Diagram 266
Chart OS. Phase OS Overall Logic Diagram 267
Chart 09. Storage Allocation Logical Phase Flowchart 318
Chart PA. Phase PA Overall Logic Diagram 319
Chart PD. Phase PD Overall Logic Diagram 320
Chart PH. Phase PH Overall Logic Diagram 321
Chart PL. Phase PL Overall Logic Diagram 322
Chart PP. Phase PP Overall Logic Diagram 323
Chart PT. Phase PT Overall Logic Diagram 324
Chart QF. Phase QF Overall Logic Diagram 325
Chart QJ. Phase QJ Overall Logic Diagram 326
Chart QU. Phase QU Overall Logic Diagram 327
Chart QX. Phase QX Overall Logic Diagram 328
Chart 10. Register Allocation Logical Phase Flowchart 345
Chart RA. Phase RA Overall Logic Diagram 346
Chart RD. Phase RD Overall Logic Diagram 347
Chart RF. Phase RF Overall Logic Diagram 348
Chart 11. Final Assembly Logical Phase Flowchart 355
Chart TF. Phase TF Overall Logic Diagram 356
Chart TJ. Phase TJ Overall Logic Diagram 357
Chart TO. Phase TO Overall Logic Diagram 358
Chart TT. Phase TT Overall Logic Diagram 359
Chart UA. Phase UA Overall Logic Diagram 360
Chart UD. Phase UD Overall Logic Diagram 361
Chart UE. Overall Logic Diagram. 362
Chart UF. Phase UF Overall Logic Diagram 363
Chart XA. Phase XA Overall Logic Diagram 364

PURPOSE OF THE COMPILER

The IBM System/360 Operating System PL/I (F) Compiler analyzes and processes source programs written in PL/I, and translates them into a form suitable for input to the Linkage Editor or Linkage Loader. When errors are detected in the source program, appropriate diagnostic messages are produced. The compiler functions within IBM System/360 Operating System and may be used on machines where at least 45,056 (44K) bytes of main storage are available for the compilation (exclusive of storage requirements for the operating system).

THE COMPILER AND THE OPERATING SYSTEM

The PL/I (F) Compiler is a processing program of IBM System/360 Operating System. The compiler consists of a number of phases under the supervision of compiler control routines. The compiler communicates with the control program of the operating system, for input/output and other services, through the control routines.

A compilation is introduced as a job step under the control of the operating system, via the JOB statement, the execute (EXEC) statement, and the data definition (DD) statements of the Job Control Language, for the input/output data sets. Cataloged procedures are provided to keep these statements to a minimum. A discussion of the introduction of a compilation as a job step, and of the available cataloged procedures, is given in the publication IBM System/360 Operating System, PL/I (F) Programmer's Guide.

The source program to be compiled appears as input to the compiler on the SYSIN data set. The compiler uses SYSUT1 (required if the main storage is insufficient to contain the program) and SYSUT3 (required if the 48-character set or the compile-time processor is used) as work data sets. The SYSPRINT data set is mandatory. The SYSPUNCH and SYSLIN data sets are used, depending on the options specified by the source programmer, to contain the output from the compiler.

The overall data flow associated with a compilation, and the data sets used in the compilation, are illustrated in Figure 1.

A compilation is initiated by loading the compiler control routines from the Link Library. The compiler control routines then carry out their own initialization, including loading those compiler control routines which remain in storage throughout the compilation. These routines perform the following functions:

1. Act as the interface between the compiler phase and the operating system, controlling all input/output, storage allocation, program interruptions, storage dumping, etc.

2. Supervise the loading of compiler phases in accordance with source program options and information obtained from the source program by the compiler phases.

3. Supervise all workspace used by the compiler for information concerning the source program. This includes any spilling from main storage to auxiliary storage in order to accommodate large source programs, the conversion of symbolic references to absolute addresses, and the conversion from absolute addresses to symbolic references.

4. Provide a number of routines to assist in compiler debugging.

The compiler options specified are interpreted and the appropriate action taken. The environmental options, such as storage size and device type, are used to calculate the text and dictionary block size and the "spill" point (i.e. the point at which the main storage available is insufficient to contain the dictionary and text).

To determine the block size a table contained in Phase AB is used. The storage size is used as the argument to search the table. When the correct entry is found, the text block size and the dictionary block size values are extracted and used for the compilation.

The options are instructions to the compiler. Some of these require a phase to be loaded that would not otherwise be loaded. When an option of this type is found, a request for the phase required is inserted into the status byte in the phase directory. Other options are in the form of instructions to a phase that is always loaded. These instructions are also placed

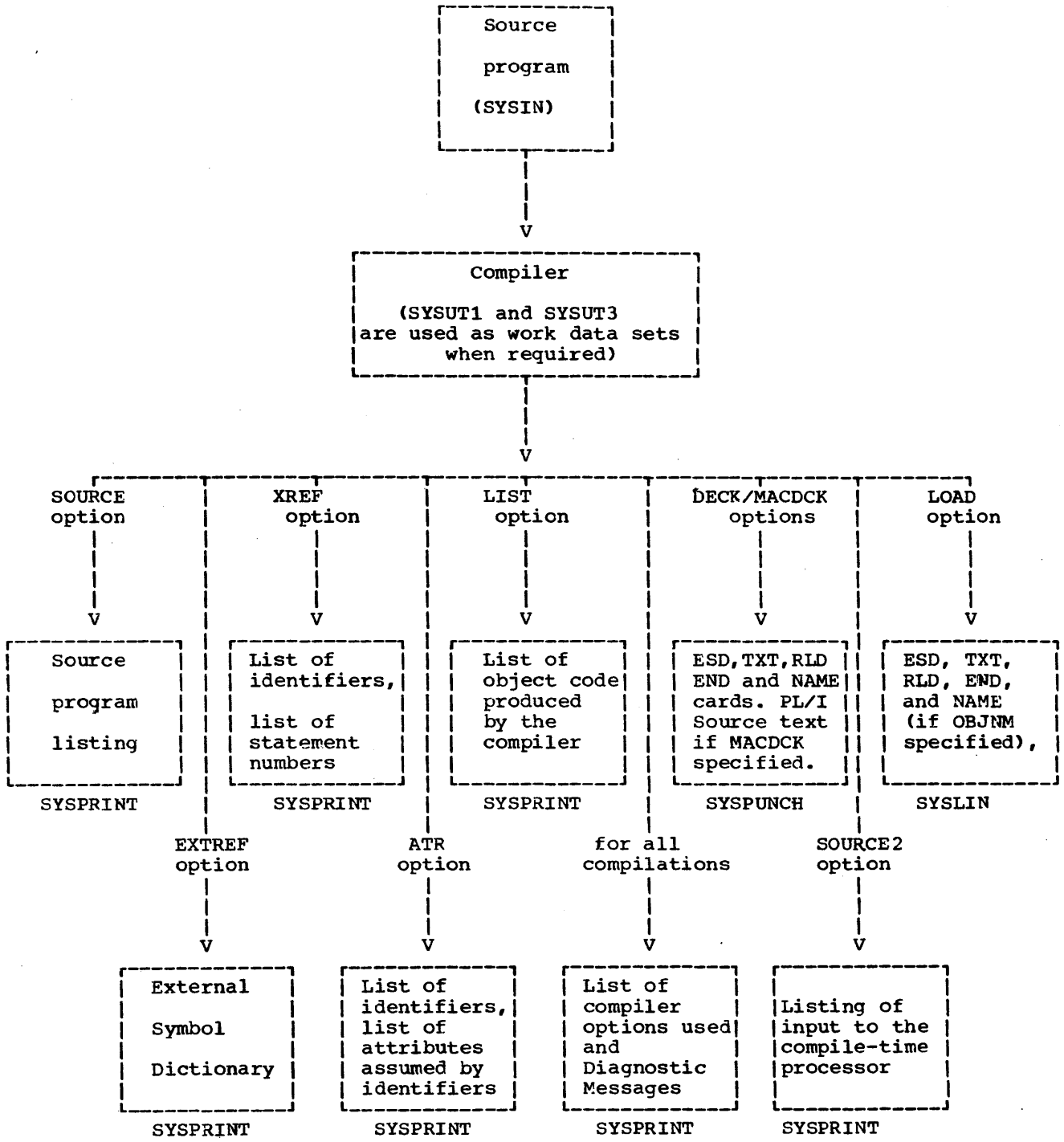

Figure 1. Compiler Data Flow and Data Sets Used

in coded form in the communications region of the dictionary, generally in the Control Code word (see CCCODE in Appendix B).

COMPILER ORGANIZATION

The PL/I (F) Compiler comprises a number of logical phases, each of which consists of several physical phases as shown in Appendix A.

The compiler phases and their corresponding functions are indicated in Figure 2, and the organization of the compiler is shown in Figure 3.

Control is passed between the phases of the compiler via the control routines. After each phase has been executed, it branches to the control routine, which selects from its load list the next phase to be executed.

Communication between the phases is implemented by the following:

1. The text string. The text string at the start of the compilation is input text. This is converted by the compile-time processor, if necessary, into a string which is PL/I source text. The characters in this string are translated into a code internal to the compiler. The phases of the compiler gradually process the text until the final form is the object program, consisting of a string of machine instructions. For the compiler proper, the text code bytes used, and formats of statements at different stages of the compilation, will be found in Appendix D.

   The text is broken down into a number of blocks, depending upon the size of the machine. Each block has a symbolic name which is independent of the physical location of the block in storage. Thus, the text blocks may be moved around in main storage under the supervision of the compiler control routines, and spilled on to auxiliary storage if insufficient main storage is available.

2. The dictionary. The dictionary consists of a number of blocks, each with a symbolic name. Part of the first dictionary block is used as a communications region (see Appendix F) between phases, and for this reason the first block is never spilled, even when the source program to be compiled exceeds available storage. The communications region contains such information as the addresses of the heads of chains, the symbolic start of text, etc. The remainder of the dictionary contains all information relating to identifiers appearing in the program, temporary storage areas required, etc. For the compiler proper, the format of all dictionary entries will be found in Appendix C.

Logical Phase	Function
Compile-time Processor	Reads input text, executes any compile-time statements contained in it, and modifies text as directed, producing modified text for further compiler processing.
Read-In	Checks source program syntax and removes all superfluous characters, such as comments and non-significant blanks, from the text string.
Dictionary	Removes all BCD identifiers and attribute declarations from the source string, and replaces them by symbolic references to dictionary entries. The dictionary entries contain all the consistent declared attributes, and all the attributes specified in the language in default of source program specifications. Error messages are generated for all inconsistent attributes.
Pretranslator	Processes those features of the language that are more easily processed in their original PL/I form, than when the original syntactic form has been lost in later phases. The Pretranslator carries out these modifications which include the rearranging of the order of certain I/O statements, the creation of temporary variables for procedure arguments which are expressions, the conversion of array and structure assignments to a series of DO-loops surrounding scalar assignments, and the removal of iSUB expressions.
Translator	Converts the original PL/I syntactic form to an internal syntactic form, referred to as "triples." Triples consist of the original source program operators and operands, but rearranged so that the operations specified in the source string may be carried out in their proper order.
Aggregates	Carries out all structure and array mapping, so that elements are aligned on the correct storage boundaries. When it is not possible to carry out the mapping at compilation time, such as when the aggregates contain string lengths or array bounds which are specified by expressions, object code is produced to do it at object time. This phase also checks that items DEFINED on arrays and structures can be mapped consistently.
Optimization	If optimization is requested, the optimization phases attempt to reorder triples for subscript address calculations and generate efficient pseudo-code for DO-loop control. This enables some PL/I programs to compile into faster object code at the cost of extra compile time.
Pseudo-Code	Converts the triples to a form closely resembling machine instructions, in which registers are represented symbolically, and storage locations are represented by dictionary references with offsets. The final pseudo-code version of the text also contains a number of special pseudo-code items for the guidance of later phases.

Figure 2. Compiler Logical Phases (Part 1 of 2)

Logical Phase	Description
Storage Allocation	Searches the dictionary for all entries requiring storage, and allocates offsets to each item, either within its AUTOMATIC block, or within the STATIC storage area. Code is compiled to set up dope vectors and pointers at object time, for allocations of controlled variables and temporaries, the storage for which must be obtained during the execution of the object program. Prologue code is generated for each block of the object program.
Register Allocation	Allocates physical registers to the symbolic registers which have been requested by earlier phases, and also ensures that all the storage location offsets allocated in previous phases can be addressed by the insertion of additional instructions, where necessary.
Final Assembly	Completes the translation to machine code instructions, by calculating branch destination addresses inserted symbolically by earlier phases. Loader text is then produced for the machine instructions, constants, INITIAL values in STATIC storage, and all the constant data required for block initialization. ESD and RLD cards are produced to enable the object program to be edited by the Operating System/360 Linkage Editor or the Linkage Loader. The Final Assembly Phase also produces a listing of the object code produced.
Error Editor	Entered at the end of every compilation. The dictionary is examined to determine whether there are any diagnostic messages to be printed out. If there are none, the compilation is terminated by the compiler control. If there are diagnostic messages to be printed out, the error dictionary entries are processed and the messages are printed. The texts of all the diagnostic messages are held in modules XG through YY.

Figure 2. Compiler Logical Phases (Part 2 of 2)

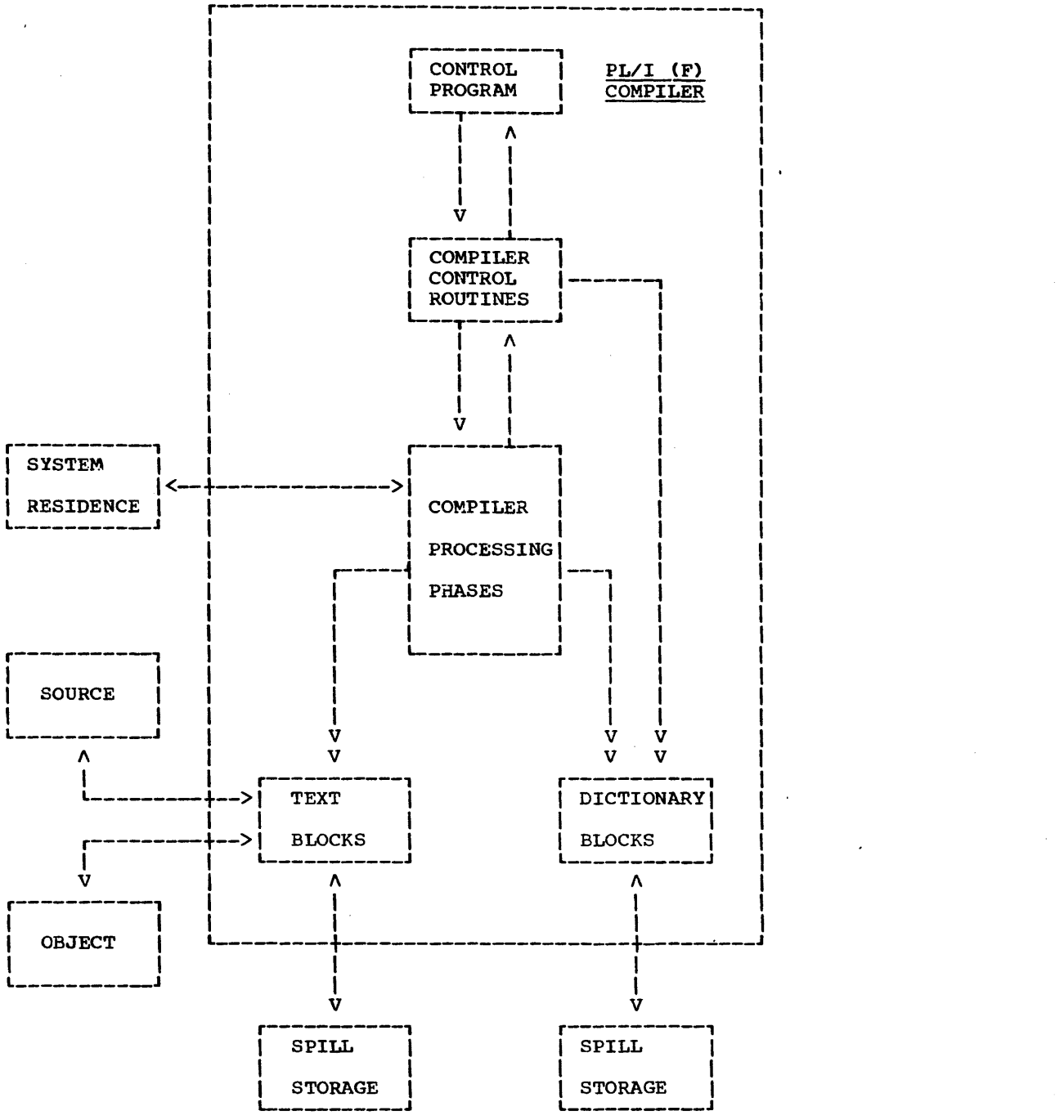

Figure 3. Compiler Organization and Control

Note: For descriptions of terms and abbreviations used in the text during a compilation which are mentioned in this chapter, refer to Appendix D.11.

COMPILER CONTROL AND 48-CHARACTER SET PREPROCESSOR

COMPILER CONTROL

When the PL/I (F) Compiler is invoked by the calling program (e.g., the Job Scheduler) of the operating system, the Compiler Control module IEMAA is loaded and entered. IEMAA is resident during the whole compilation; it controls the following functions:

- Initialization
- Character translation
- Communication between phases
- Text and dictionary block control
- Scratch storage control
- Storage requirements
- Phase loading
- Phase directory construction
- Diagnostic message control
- Input/output control
- Program check handling
- Compile-step termination

Initialization

Initialization is achieved by module AA linking to module AB. Module AB performs the detailed initialization of the compiler, and provides the following functions:

- Opens SYSIN and SYSPRINT data sets
- Constructs a phase directory (for details refer to Appendix B)
- Sets up a communications region in the dictionary (for details refer to Appendix F)
- Scans option list
- Obtains space for text blocks and dictionary blocks.
- Opens SYSUT3 and SYSPUNCH as necessary
- Prints a list of options used in current compilation
- Loads phase AN to handle a normal dictionary, or phase AL if an extended dictionary is requested.

On return from module AB, the first compiler phase is loaded and entered.

Character Translation

The character translation tables (see Appendix D.1) provide the facility for converting external code to a compiler internal code, and for converting the internal code back to the external form. These tables thus prevent the compiler from becoming character code dependent, and enable the scanning routines to process the input source statements more efficiently. Note that the contents of these tables are different during compile-time processing from the contents during compilation proper.

Communication Between Phases

The communications region is an area specified by the control routines, and used to communicate necessary information between the various phases of the compiler. The communications region is resident in the first dictionary block throughout the compilation.

Entry to the various compiler control routines is via a transfer vector. Details of the transfer vector and the organization of the communications region appear in Appendix F. (Note: The use of the communications region during compile-time processing is described in Appendix J.)

Text and Dictionary Block Control

Block control is achieved by a system of text and dictionary references. If the program in storage becomes too large,

blocks are placed on an external file, SYSUT1. The block control routines contain the input/output control.

Block Control Area

The block control area contains two tables, DSLOTS and TSLOTS, and is held in modules AL/AN. The DSLOTS table contains 70 4-byte slots, and the TSLOTS table contains 96 4-byte slots. The first six slots in each table are used by the compiler control routines for holding general block information. The remaining slots contain details of the status and position of text and dictionary blocks, one slot per block.

The format of each slot is as follows:

1 byte indicator

3 byte address - (a) if the block is in main storage it contains the absolute address of the start of the block.

(b) if the block is on disk it contains the relative track address of the block in the spill file.

The format of the indicator byte is X 'ab' where:

ab = FF if the block has not been allocated

a = 8 if the block is in storage

a = 0 if the block is on the spill file

b = 4 if the block is busy (i.e., locked into storage)

b = 3 if the block is wanted (i.e., spillable but preferably kept in storage).

b = 2 if the block is not wanted (i.e., information to be retained but block may be spilt).

b = 1 if the block is free (i.e., information no longer required).

Text Block Chaining

When text blocks are chained, the second byte of the last but one word of each block contains the block number of the next block in the chain.

Scratch Storage Control

Scratch storage of 4K bytes is guaranteed to all phases. The control routines split the 4K-block into discrete sections, each of 512 bytes, and allocates them as required.

Storage Requirements

The PL/I (F) Compiler requires main storage for the following purposes :

Compiler processing phases

Print buffers

Compiler control routines

Dictionary area

Text area

Input/Output buffers

Input/Output routines (QSAM)

The main storage required by each phase of the compiler need be contiguous only for each control section.

During the read-in logical phase a minimum of two dictionary blocks and two text blocks is available in storage simultaneously. During the optimization logical phase, a minimum of three dictionary and five text blocks is available in storage simultaneously.

During the rest of the compilation four dictionary blocks and four text blocks are available in storage simultaneously.

The dictionary and text block size is chosen according to the amount of main storage available to the compiler. The SIZE option, interpreted at invocation time, provides the value used to determine the block size. A table contained in Phase AB is searched, using the SIZE option as an argument. When the correct entry is found, the block size is extracted.

Appendix E shows details of storage allocation.

Phase Loading

Phase loading routines include phase marking (where phases are indicated as wanted or not wanted), phase loading, and phase deleting facilities. The phase directory is constructed for this purpose.

Phase Directory Construction

Because of the number of phases in the compiler, the phase directory is split into halves. The first half is constructed during the initialization of the compiler; also a list of names of the phases in the second half is kept in Phase AA. This list is used to pass status indications (i.e., whether phases are wanted or not wanted) from the first half to the second half. Phase JZ uses the list to construct a new directory for the second half. (The error message phases have their own phase directory, which is built in phase XB and uses the same space in AA as the phase directory proper.)

The phase directories are constructed by use of the BLDL macro and a build list. The format of the build list is fully described in the publication IBM System/360 Operating System, Supervisor and Data Management Services. For details of the phase directory see Appendix B.

Diagnostic Message Control

Diagnostic message control routines cause diagnostic messages to be placed in a chain in the dictionary.

Input/Output Control

The I/O control routines involved act as an interface between the compiler phases, and SYSIN, SYSPRINT, SYSLIN, and SYSPUNCH data sets. (See Figure 4.)

Program Check Handling

The compiler handles all program checks. Control can be passed to a phase to enable it to deal with the check.

Compile-step Termination

The compiler completion code is picked up and control is returned to the calling program.

The compiler completion codes are as follows:

Code	Meaning
0	No diagnostic messages issued; compilation completed with no errors; successful execution expected
4	Warning messages only issued; program compiled; successful execution is probable
8	Error messages issued; compilation completed, but with errors; execution may fail
12	Severe error messages issued; compilation may be completed but with errors, successful execution improbable. If a severe error occurs during compile-time processing, the compilation will be terminated and, if the SOURCE option has been specified, a listing of the PL/I program text produced by the compile-time processor will be printed.
16	Termination error messages issued; compilation terminated abnormally; successful execution impossible.

COMPILER CONTROL MODULES

In addition to modules AA and AB, further modules, AC, AD, AE, AF, AG, AH, AI, AK, AL, AM, AN, and JZ are used in compiler control. The functions of these modules are briefly described in the following paragraphs.

Module AC

Module AC controls reading and writing operations on SYSUT3, the intermediate file. It is loaded only if the CHAR48 or MACRO option is specified, and is deleted at the end of the Read-In Phase.

PHASE	TRACEOUT	SYSIN	SYSPRINT	SYSLIB	SYSLIN	SYSPUNCH	SYSUT1	SYSUT3	SYSUDUMP (SYSABEND)
IEMAA			CLOSES		WRITES	WRITES			OPENS WRITES CLOSES
IEMAB		OPENS CLOSES	OPENS CLOSES WRITES		OPENS CLOSES	OPENS CLOSES	OPENS	OPENS CLOSES	
IEMAC								WRITES	
IEMAK		CLOSES	CLOSES		CLOSES	CLOSES	CLOSES		
IEMAL/AN			WRITES				READ/ OPENS WRITES		
IEMAE		CLOSES							
IEMAG		CLOSES						OPENS/ CLOSES	
*IEMAT	OPENS/ WRITES CLOSES								
IEMBC		READS	WRITES						
IEMBG			WRITES	READS		WRITES		WRITES	
IEMBN			WRITES						
IEMBX		READS						WRITES	
IEMCI		READS	WRITES					READS	
IEMFY			WRITES						
*IEMF1			WRITES						
IEMQX			WRITES						
IEMTF			WRITES						
IEMTO					WRITES	WRITES			
IEMTU			WRITES						
IEMUB			WRITES		WRITES	WRITES			
IEMUF			WRITES						
IEMXA			WRITES						
IEMXC			WRITES						

• Figure 4. Input/Output Usage Table

Module AD

Module AD performs inter-phase dumping.

All specified active storage is dumped at the end of the phases stated or implied in the DUMP option. If the DUMP option includes either I, for the Annotated Dictionary Dump, or E, for the Annotated Text Dump, or both, then phase AD will load either phase AH, or phases AI and AJ, or all three, to produce the required output.

The DUMP Option

The DUMP option which is specified in the PARM field of the EXEC card indicates where dumping of main storage is to take place. It may be specified in one of the following ways:

1. DUMP, means a dynamic dump is required (the dump routine will be called by a running phase)

2. DUMP=(area,x_1,x_2,x_3,....x_n) means a dump of the storage after the named phase where x is the name of a phase.

Area is any combination of TDPSCIE:

- T text blocks
- D dictionary blocks
- P phases loaded
- S scratch storage
- C control phase
- I annotated dictionary blocks
- E annotated text blocks

The general syntax is:

DUMP[=([area],{x|(y,z)},...)] where x, y and z are phase names.

A single phase name indicates dumping of storage after this single phase. A pair of phase names indicates a continuous group of phases after which dumping of storage is to occur.

The dump will appear on SYSPRINT, inserted into the normal compiler output.

If area is omitted the default taken is DTSP. If a program check occurs and DUMP has been specified then area will be given the default DTSPC.

If the area specifies both T and E or both D and I, only the relevent edited dump will be printed.

If the area contains P, a message is printed on completion of every phase, whether mentioned in the DUMP parameter or not.

Use of the DUMP option may cause the compiler to use about 8K bytes more main storage than the SIZE option specifies. This is because SIZE specifies the amount of main storage the compiler can use for normal compilation and does not allow for the internal compiler diagnostic dumps.

Example of an EXEC card using the DUMP option:

```
//STEP1 EXEC PROC=PL1LFC,
            PARM.PL1L='DUMP=(TIP,OE,QU)'
```

This statement specifies compilation using the DUMP option to obtain a printout of the text blocks, the annotated dictionary, and the loaded phases after the completion of compiler phases OE and QU.

Module AE

Module AE is the finalization of the Read-In Phase control. (See Fig.4, Note[1])

Module AF

Module AF is a control section consisting of a table containing the compiler options which may be used during a compilation. The table is constructed at system generation time. The control section is brought into storage by the initialization Module AB at compilation time. A description of the use of Module AF is given in Appendix G.

Module AG

Module AG closes SYSUT3 for output, and re-opens it for input.

The closing and opening operations are performed in the following order:

CLOSE
  alter macro-type in data control block (DCB)

OPEN(INPUT)
  switch routine ZURD to point at the SYSUT3 data control block

Module AH

Module AH produces a dump of the dictionary. It prints out the communications region in the first block, and the offsets tables for each block if the extended dictionary option is in use. The remainder of each block is printed out entry by entry. The BCD is translated for those entries containing BCD. At the end of the dump, a list of all the dictionary codes used is given, with an explanation for each code.

The module is called by phase AD only if an I is specified in the area field of the DUMP option.

Modules AI and AJ

Modules AI and AJ are called, if E is specified in the area field of the dump option, to provide an 'easy-to-read' text print in which the triples and pseudo-code items comprising the text are printed separately. This option is available between phases IA and OE inclusive.

Module AK

Module AK is the closing routine of the compiler. Its function is to release main storage used for dictionary, text blocks, scratch storage, and completed phases. If batch compilation is not specified, module AK closes all the files used by the compiler. If a batch compilation is specified, a check is made to determine whether any source programs are still to be compiled. Where there are none module AK closes all files. Where one or more programs remain to be compiled, the spill file only is closed, the batch delimiter card is scanned for syntax errors, and control is returned to module AA.

Module AL

Module AL contains the control routines for dictionary and text-block handling for the extended dictionary.

Module AM

Module AM marks phases as either wanted or not wanted, depending upon the compiler invocation options. Phases that are always loaded are marked wanted.

AM is the first compiler phase loaded after compiler initialization. It tests the relevant bits in the Control Code word (CCCODE) and marks the phases accordingly.

Module AN

Module AN contains the routines for dictionary and text-block handling for the normal-sized dictionary.

Module AT

Module AT provides extra debugging features during compiler runs. The three features of this module are:

1. A 'TRACE' of all instructions executed between specified locations within specified compiler modules.
2. A 'FLOW' of branches taken between specified locations within specified compiler modules.
3. The ability to VERIFY and REP(replace) patches within specified compiler modules.

Note: Features 1 and 2 can be inhibited until a particular statement is reached.

The TRACE/PATCH Option

The following must be done to use the facilities described above in Module AT:

1. 'T' (Trace or Flow) or 'P' (Verify or Rep) must be inserted in the compiler option list.
2. A size of at least 12K less than the size available must be specified. Do not attempt to use SIZE=999999.
3. As the output will go to a dataset named TRACEOUT, the following DD card will also be required in the JCL for the compile step:

```
//TRACEOUT DD SYSOUT=A
```

In addition, control cards will be required which must be inserted before the first card of the source program. Up to 10 each of TRACE/FLOW and VERIFY/REP cards are permitted.

To obtain TRACE/FLOW facilities the control card should contain the following information:

* in card column 1

Keyword 'TRACE' or 'FLOW'

Two-letter module name, Four-digit hexadecimal offset of instruction — of start of Trace or Flow

Two-letter module name, Four-digit hexadecimal offset of instruction — of end of Trace or Flow

[STAT=nnnnn] — where nnnnn is five-digit decimal PL/I statement number at which Trace/Flow is to start.
Note: This field is optional and may be used only if the module in which TRACE/FLOW is to start updates ZSTAT.

Example:

```
* TRACE GB 012B GU 036C
```

Note: Fields should be separated by at least one blank, and end in or before column 72.

To obtain the PATCH facilities the control card should contain the following information:

* in card column 1

Keyword 'VERIFY' or 'REP'

Two-letter module name, Four-digit hexadecimal offset — of Patch location

Note: Hexadecimal Patch data may be separated by commas if desired.

Example:

```
* VERIFY GB 032A
```

VERIFY and REP instructions are carried out as soon as the module concerned is loaded. If the data does not compare on Verify operation, an error message will be given on the data set TRACEOUT. Note that Rep operations do not depend on a previous valid verify operation.

Module F1

Module F1 checks whether Syntax Check should terminate compilation. The three options for the Syntax Check are recognized in module AB and flags are set. On completion of the Read-in and Dictionary phases, these flags are tested by module F1, which was loaded when phase FX released control. The decision to terminate or continue is made based on the flag settings and the level of error severity encountered (by inspecting the heads of the error chains), and a special message is issued at this point.

Module JZ

Module JZ builds the second half phase directory. A build list is constructed from the second half list held in Module AA; a BLDL is performed on this list. The phase directory is then reconstructed in Module AA for the second half of the compiler.

48-CHARACTER SET PREPROCESSOR

Phase BX is the 48-character set preprocessor. It is loaded on programmer option and receives, as input, source text in the 48-character syntax.

The preprocessor scans the input text for occurrences of characters peculiar to the 48-character set, and converts these to the corresponding 60-character symbols. It then puts out the adjusted text onto auxiliary storage ready for Phase CI, the first pass of the Read-In Phase.

The text is read in record by record. It is then scanned for alphabetic characters which may be the initial letters of operator keywords, for periods, and for commas. Items within comments or character strings are ignored.

When a possible initial letter is discovered, tests are made to determine whether or not one of the reserved operator keywords has been found. If one has been found, it is replaced by its 60-character set equivalent. Similarly, appearances of two periods are replaced by a colon, and a comma-period pair is replaced by a

semi-colon if the comma-period pair is not immediately followed by a numeric character.

Allowance is made for the possibility that a concatenation of characters which is meaningful in the 48-character set may be split between two records.

Before the text is processed a copy of the original input is preserved. The output from the preprocessor is the transformed text, record by record, followed by the original text. The Read-In Phase processes transformed text but prints out the original.

The 48-character set preprocessor uses Compiler Control routine ZURD to obtain input, and routine ZUBW to place its output onto auxiliary storage.

Note: If the MACRO option is specified, all the processing described above is done by the compile-time processor, and phase BX is bypassed.

COMPILE-TIME PROCESSOR LOGICAL PHASE

The compile-time processor consists of six physical phases. Each of these phases is executed once, unless an INCLUDE data set is encountered. In this case certain phases will be re-executed.

The compile-time processor moves source text that does not contain compile-time statements directly into text blocks. During this process invalid characters are replaced by blanks, and line numbers are encoded and inserted into the text. Compile-time statements are decoded and translated into an internal form and then placed directly into text blocks. An entry is made into the dictionary for each compile-time variable, procedure, label, or INCLUDE identifier.

A second pass is then taken over these text blocks, during which compile-time statements are executed and the PL/I source program text is scanned and replacements are made. The output from this pass is a PL/I source program contained on SYSUT3 and, optionally, a punched card deck.

If during the second pass, an INCLUDE data set is processed, the entire procedure indicated above is executed recursively to process this text.

Text and dictionary formats used by the compile-time processor are contained in Appendix J.

Line Numbering

As the input is being processed a unique line number is assigned to every logical record processed. If a listing of the input is requested, these line numbers are written out beside the appropriate line. The line numbers are also encoded and inserted into the text so that diagnostics can be keyed to them. These line numbers are also output on SYSUT3, to aid the user in determining from which input line a particular line of output came.

Phase AS

This phase, consisting of one physical module, is loaded if the MACRO option is specified. It is resident throughout compile-time processing until the cleanup phase (BW) is invoked.

This phase controls the loading of the subsequent compile-time processor phases. The initialization phase (AV) is loaded only once. The two processing phases (BC and BG) are loaded and executed once unless an INCLUDE data set is processed. In this case phase AS reloads the processing phases to process this data set.

In addition, phase AS contains a set of service routines used by both processing phases. Access to these routines is via a transfer vector located at the beginning of phase AS.

Phase AV

This phase consists of one physical module. Its purpose is to initialize certain cells in the communications region for the compile-time processor phases.

Phase BC (BE, BF)

Phase BC consists of three physical modules, BC, BE, and BF. Module BE contains the control routine.

Phase BC accepts input text, moving it into text blocks until a compile-time statement is found. (For a description of the use and layout of text and dictionary blocks, see Appendix J.) When a compile-time statement is encountered, it is encoded into a set of interpretive instructions and, except for compile-time

procedures, added to the current text block. Compile-time procedures are similarly encoded, but are placed in separate text blocks.

As compile-time statements are encoded, all non-keyword identifiers encountered are entered into the dictionary, together with any attributes that are known. Entries are also made in the dictionary for constants and iterative DO-loops.

During phase BC, invalid characters occurring outside of strings and comments cause a diagnostic to be printed. They are converted to blanks. Invalid characters can thus be used for markers of various sorts in text blocks. Diagnostics are given for syntax errors in compile-time statements. Line numbers are encoded and inserted into the text for the use of the phase BG scan. All input characters are converted to their EBCDIC representation before they are processed.

Phase BG (BI, BJ)

Phase BG consists of three physical modules: BG, BI, and BJ, which contain the control routine, the macro-code interpreter, and the built-in function handler, respectively.

In general, the input to phase BG is the set of chained text blocks and dictionary blocks created by phase BC. The phase BG execution is essentially that of the compile-time processor described in the external specifications. That is, its basic action is to move through text blocks looking for instances of compile-time variables or compile-time statements, which it uses to produce the output text. As line numbers are encountered in the text, they are placed into a location containing the current line number. This is used both for phase BG diagnostics and by the output editor.

If a compile-time variable or procedure reference is found, the scan cursor is positioned to scan its value. When the scan of the value is completed, the cursor is properly positioned back into the text. If a compile-time variable or procedure reference is found in this value scan, the process repeats itself. Such nesting can occur to a depth of 100.

If the scan encounters an encoded compile-time statement (built by phase BC), control is passed to an interpreter. This interpreter executes the statement -- possibly repositioning the scan cursor -- and returns to the scan.

The output of this phase is a PL/I source program contained on SYSUT3, and, optionally, as a sequenced card deck.

Phase BM (BO)

Phase BM examines the heads of the error chains in the first dictionary block, and programmer options which specify the severity level of messages required. If there are no messages, it passes control to the clean-up phase (BW). If diagnostic messages are required, the phase loads BN to process them after scanning the chains and indicating where the text is to be found, from the message directory block, module BO.

Module BN (BP, BV)

The text of all compile-time processor error messages is kept in modules BP through BV. The messages are ordered by severity, within these modules. BM will have listed those modules which contain messages required for a particular pass. Module BN loads and releases these modules, one at a time and extracts the required messages. When all compile-time error messages have been processed, module BN returns control to BM.

Phase BW

The purpose of this phase to set all tables and communication region cells to the values required by the compiler proper. In addition it will release all text and dictionary blocks used by the compile-time processor phases and then pass control to the next required phase of the compiler.

If a severe or terminal diagnostic has been produced by the Compile-time processor a listing of the contents of SYSUT3 will be printed (provided that the SOURCE option applies), and compilation will be bypassed.

THE READ-IN LOGICAL PHASE

The Read-In Logical Phase consists of five discrete physical phases, each of which processes a particular group of statement types. The phase obtains the input text in the externally coded form by a call to the compiler read routine, and converts it to

internal code by means of a translation table provided by compiler control.

The source text is scanned for syntactical errors. During this time an output string is built up, which consists essentially of the input text with comments and insignificant blanks removed. The source text is scanned and statements are numbered, identified, and diagnosed. Any required substitutions are made, statement labels are inserted in the dictionary, and chains are formed (for example, BEGIN, PROCEDURE chains). If the SOURCE option applies, source statements, with their number, and optionally, their block levels and DO-nest levels, are printed out immediately after they have been read.

When the input text provides an end-of-file indication, processing is terminated. In ERROR situations this may not occur when a valid external procedure has been completely processed. By keeping a count of PROCEDURE, BEGIN, DO, END, ON, and IF statements, the phase can detect when the logical end-of-program indication is found. If there are more records after the end of the external procedure, they are ignored.

If an end-of-file indication is encountered before the logical end of the program, diagnostic messages are issued and suitable END statements are inserted to allow compilation to continue.

The output of the Read-In Phase provides a syntactically correct output string; a table of entry and statement labels; chains of coded diagnostic messages; a set of switches specifying compilation content details; a set of chains linking statements of a particular type, to facilitate subsequent scanning; and optionally, a listing of the source text.

Statement Numbering

All statements are given a sequential number. This includes each compound statement, each statement contained in a compound statement, block and group delimiting statements, and null statements. The numbering of the statement is indicated on the source listing. Diagnostic messages also refer to these statement numbers.

Statement and Entry Labels

Statement and entry labels appearing in the source text are removed and added to a label table, which is built up in the region intended for the dictionary. This region may be extended by further blocks as required. The label table entry is an embryo dictionary entry, with blank regions to be filled later by the Dictionary Phase EG.

When a label declaration is found, an entry is made in the label table with a statement label code, the current (updated) sequential number, and the current block level and block count.

Statements having multiple labels give rise to multiple label table entries. These entries are identical except for the BCD name.

If the statement following a label is subsequently identified as a PROCEDURE or ENTRY statement, the label table is re-accessed, and the entries associated with the statement are modified (see Appendix C.2).

Chains Constructed by Read-In

To provide rapid scanning in the dictionary phases, the following chains are constructed by the Read-In Phase:

The CALL chain

The PROCEDURE-ENTRY-BEGIN chain

The DECLARE chain

The ALLOCATE chain

Errors and Diagnostic Messages

As the source text is scanned it is syntactically analyzed. Keywords are identified and passed as valid only if they may legally appear within the type of statement being diagnosed. However, consistency of attributes and options within a statement are not normally analyzed. This is left for Phase EK.

When a syntactical error is detected, an attempt is made to correct it and an appropriate diagnostic message is generated. The main aim of the Read-In Phase is to present syntactically correct text to subsequent compiler phases.

Certain corrections are performed without prejudicing the complete compilation.

Detected errors cause a diagnostic message to be added to a diagnostic message chain in the dictionary area. Each message is in a coded form with parameters (textual matter, statement numbers, and so on). The message is decoded and printed out by the Error Editor.

Where an error makes it impossible for the scan of a statement to continue, the statement is terminated correctly at such a point as to leave the statement syntactically correct. The text between that point and the next semi-colon (not in a comment or character string) is skipped. The diagnostic messages produced in these circumstances will include at most the first ten characters of the text that is skipped.

The Output String

The output string is so arranged that a complete statement never spans storage blocks. One of the conditions of a successful compilation is that the output resulting from any statement must not exceed the block. This restriction, however, does not apply to DECLARE statements. Formats of the statements appearing in the output string are given in Appendix D.2.

Identifiers

All identifiers which are not recognized as keywords in the source text appear in the output string.

Constants

All constants appear in the output string.

Operators

All operators appear in the output string.

Initial Labels

Subscripted label variables which are initialized by attachment to statements are placed in pseudo-assignment statements in text, and then handled as if they were normal labels.

STRUCTURE OF THE READ-IN LOGICAL PHASE

The Read-In Phase can occupy 16K bytes of storage for any one pass. A storage map for this phase is shown in Figure 5.

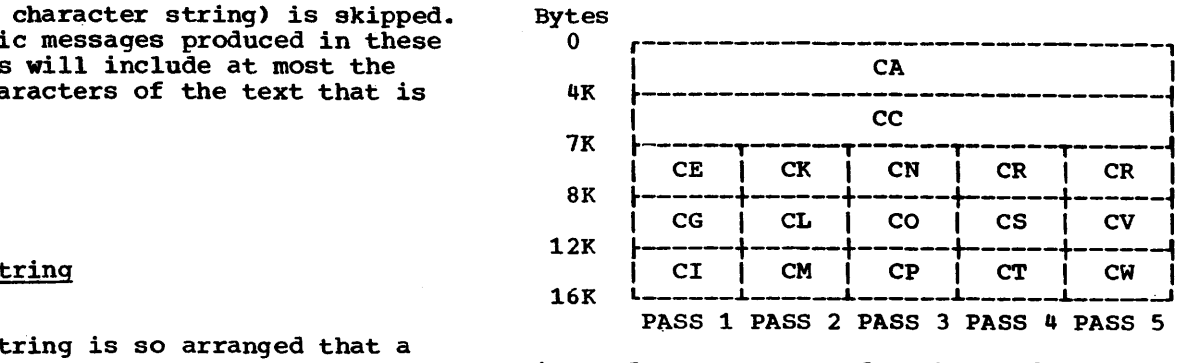

Figure 5. Storage Map for the Read-In Phase

The Read-In Phase consists of five phases or passes, each containing at most five modules. Modules CA and CC consist of common routines which are invoked throughout the phase by each of the passes, in turn. Modules CE, CK, CN, and CR contain separate keyword tables. Details of the organization of these tables are given in Appendix B. Control for each pass resides in modules CI, CL, CO, CS, and CV respectively. The following description refers to the phases by these names.

Phase CI

During phase CI (the first physical phase of the Read-In Phase) the source text is read into storage, and character codes are converted to an internal form. Statement types are identified, labels are inserted into the dictionary, and statement identifiers are replaced by single-byte codes (see Appendix D.1).

A record is kept of block nesting levels and counts to enable a check to be made for the logical end-of-program indication. In order to do this, certain statements have to be either partially or completely analyzed in this pass.

These statements are:

PROCEDURE-END
BEGIN-END
DO-END
IF-THEN-ELSE
ON

If the SOURCE option has been requested, a listing of the source program, with the statements numbered by the compiler, is printed out onto the specified output medium.

Phase CL

The output from phase CI is processed and the statement types listed below are analyzed in greater detail:

ENTRY	FREE
PROCEDURE	WAIT
DO	READ
Iterative DO	WRITE
RETURN	DELETE
GO TO	UNLOCK
DELAY	LOCATE
DISPLAY	REWRITE

If any errors are detected during this pass, diagnostic messages are inserted into chains in the dictionary as required.

Phase CO

The output from phase CL is processed. In particular, the DECLARE, ALLOCATE, and CALL statements are analyzed in greater detail. The syntax of attributes is checked, but their consistency is analyzed during phase EK. If the source program does not contain any of these three statements, this pass is not invoked.

If any errors are detected during this pass, diagnostic messages are inserted into chains in the dictionary.

Phase CS

The output from phase CL or CO is processed. In particular, the syntax of input/output statements is analyzed, together with the FORMAT statement. If the source program contains no input/output statements, this pass is not invoked.

Phase CV

This phase processes the output from earlier phases. In order to assist subsequent processing, chains are constructed for PROCEDURE, ENTRY, BEGIN, CALL, ALLOCATE, and DECLARE statements.

THE DICTIONARY LOGICAL PHASE

The Dictionary Phase forms a dictionary of identifiers, by first analyzing PROCEDURE, BEGIN, DECLARE, and ENTRY statements. The text is then scanned for contextual use of identifiers, constants, and pictures. Finally, every identifier and constant in the source text is replaced by a reference to its respective dictionary entry. Dictionary entries are made during this phase for all implicitly defined identifiers. The formats of dictionary entries appear in Appendix C.

Constructing and Accessing the Dictionary

The dictionary, during the construction stage, comprises two parts, the hash table and the dictionary proper.

To facilitate a search through the dictionary for an entry with a particular BCD, a method is used of dividing the dictionary into areas. Each area is characterized by a property of the BCD of each entry in it. In practice, these areas are not contiguous but are chained lists, each item in the list being one dictionary entry long.

The start of each list is in a table, known as the hash table. The association of a particular identifier with a list, i.e. the characterization of an area, is achieved by deriving from a given BCD an address in the hash table.

"Hashing" is a process of reducing the length of the internal representation of the BCD to one word. This is done by adding successive four-byte lengths of the BCD into one four-byte register. This is then divided by 211, and the remainder is doubled to give the hash table address associated with the particular BCD. All identifiers which hash to the same address are placed in a chain; in particular, all dictionary entries with the same BCD will be in the same hash chain.

If TOM, DICK, and HARRY occur in the same DECLARE statement in that order, and

they all hash to the same address in the hash table, the address in the hash table will point to HARRY's entry, which contains the address of DICK, which, in turn, contains the address of TOM.

When no further BCD entries are to be made in the dictionary, and all BCD identifiers in the source text have been replaced by dictionary references, the hash table is deleted.

Testing for Consistent Attributes

A test is made at the start of each list of attributes, to ensure that any list of attributes at one level of factoring in a DECLARE statement is consistent.

Compiler Pseudo-Variables and Functions

Expressions specified for array bounds, string lengths, and initial value iteration factors must be evaluated at object time, or at allocation time if the variable is controlled. The expressions are placed temporarily at the end of the text, and are later moved by Phase FV and placed immediately following the BEGIN, PROCEDURE or ALLOCATE statement to which the declared variable belongs. The expression results are assigned to pseudo-variables generated by the compiler. These serve two purposes: first, the assignment statement appears as a normal PL/I statement and need not be treated as a special case; secondly, the pseudo-variable contains the dictionary reference of the variable and information concerning the destination of the expression. Compiler functions with a format similar to the pseudo-variables are also created. The function result is the specified array bound, or string length. Compiler functions are created for two purposes: first, to set bounds for base elements of structures when the structure bound is an expression, or to set the bounds of temporary arrays; and secondly, to set the storage address of a dynamically defined item immediately before its use. The formats of all the compiler pseudo-variables and functions appear in Appendix D.8.

Dictionary Entries for Entry Points

A PROCEDURE or ENTRY statement may have more than one label. Each label must have a data description to indicate the type of data returned when the label is invoked as a function, and also the type of data to which the expression in a RETURN (expression) must be converted. These need not be the same: there must therefore be provision for two data descriptions for each label. A PROCEDURE or ENTRY statement may specify parameters. The descriptions of these identifiers, obtained from DECLARE statements or default rules, are used for prologue construction, but not for parameter matching. Any data description given on these statements is to be used for conversion at a RETURN (expression), but not for determining the result returned by a function reference.

Parameter descriptions for use in parameter matching, and data descriptions used for determining the type of data returned by a function reference, may be specified by the source programmer in an ENTRY declaration. If these are not given, default and implicit rules must be used to build a data description, but no parameter description can be given.

Given the foregoing requirements, the dictionary entries describing an internal entry point are as given in Figure 6.

The set of dictionary entries A, B, C, D, E is repeated for each label associated with the PROCEDURE or ENTRY statement. The entry F will point to entry A for the first label only. D will point at the label with which it is associated. It should be noted that B and C may coincide.

The entries type 1 for PROCEDURE, ENTRY, and BEGIN statements are chained amongst themselves in the following way. Each entry type 1 belonging to a PROCEDURE or BEGIN statement contains the dictionary reference of the entry type 1, of the next PROCEDURE or BEGIN statement in the source program, and also of the entry type 1 of the immediately containing block.

The entries type 1 of PROCEDURE and ENTRY statements belonging to a single procedure are chained together in a circular manner. If there are no ENTRY statements the entry type 1 of the PROCEDURE statement points at itself.

External entry points are described by dictionary entries termed entry type 4. They contain data descriptions of the value returned when referenced as a function, and may contain descriptions of parameters.

Formal parameters which are entry points are termed entry type 5, and parameter descriptions which are entry points and are pointed at by types 3, 4, or 5 are termed entry type 6.

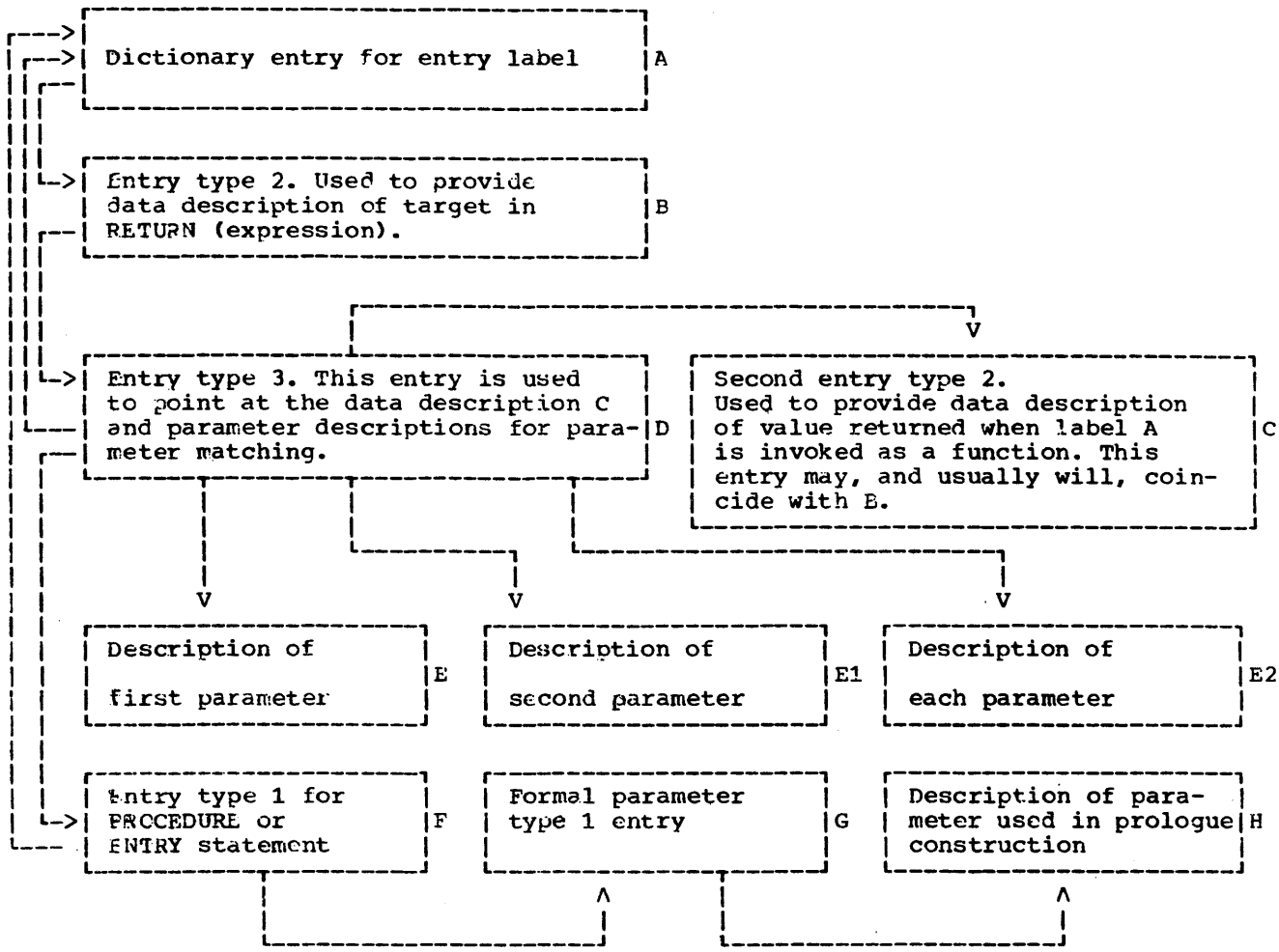

Note: There is an entry E for each parameter described in D.

Figure 6. Dictionary Entries for an Internal Entry Point

Phase ED

Phase ED contains a set of subroutines, for processing certain of the tasking and list processing attributes, and tables of generic and non-generic built-in functions. The phase obtains 1K of scratch storage, into which it moves the routines and tables, setting a slot in the communications region to point at them. This address is later picked up and used by phase EL.

Phase EG(EF)

Phase EG has two main functions. The first is to set up a hash table, and to insert the label entries left in the dictionary by the Read-In Phase into hash chains. The second function of the phase is to create dictionary entries for PROCEDURE, BEGIN, and ENTRY statements, and to construct chains linking entries of particular types.

For PROCEDURE-BEGIN statements, entry type 1 dictionary entries are created (see Appendix C.2), and block header chains are set up to link these entries sequentially. A containing block chain is also set up to link each entry with that of its containing block.

BEGIN statements are scanned for the ORDER/REORDER option, and the optimization byte is created in the entry type 1 (see Appendix C.2).

On the appearance of PROCEDURE statements, circular PROCEDURE-ENTRY chains are initialized to link the entry type 1

dictionary entries of the PROCEDURE and ENTRY statements of the same block. The formal parameter list is scanned, and formal parameter type 1 entries are created and inserted into the hash chain. Details of the PROCEDURE-ENTRY chains appear in Appendix C.2.

The attribute list and the options are scanned and an options code byte and optimization byte are created in the entry type 1 (see Appendix C.2). A check is then made for invalid and inconsistent attributes. CHARACTER and BIT attributes are processed, and second file statements (see Appendix D.8) are created if necessary. Precision data are converted to binary, and dictionary entries are created for pictures (see Appendix C.7).

Statement labels are scanned and their entry type 2 dictionary entries are created. The relevant data bytes in the dictionary are completed by default rules (see Appendix C.3).

For ENTRY statements, entry type 1 dictionary entries are created (see Appendix C.2), and the circular PROCEDURE-ENTRY chain is extended. Formal parameters, attributes, and labels are processed in a similar manner to those for PROCEDURE statements, except that the options code byte is not created.

Phase EI (EH, EJ)

Phase EI scans the chain of DECLARE statements set up by the Read-In Phase, and modifies the statements to assist Phase EK as follows:

Structure Level Numbers: these are converted to binary.

Factored Attributes: parentheses enclosing factored attributes are replaced by special code bytes, so that Phase EK can distinguish them easily. A factored attribute table is set up. It consists of slots corresponding to each factored level. Each slot contains the address of the attribute list associated with that level, and the address of the slot for the containing level.

The following attributes are processed:

DIMENSION: dimension table entries (see Appendix C.8) are created in the dictionary and the source text is replaced by a pointer to the entry. Fixed bounds are converted to binary and inserted in the table. A second file statement (see Appendix D.8) is created at the end of the text, for adjustable bounds, and a pointer to the statement is inserted in the dimension table. Identifiers with identical array bounds share the same dimension table.

PRECISION: precision and scale constants are converted to binary.

INITIAL: dictionary entries are created for INITIAL attributes.

INITIAL CALL: second file statements are created for INITIAL CALL attributes.

CHARACTER and BIT: fixed length constants are converted to binary; a code byte marker is left for * lengths (see Appendix C.8). Second file statements (see Appendix D.8) are created for adjustable length constants, and the source text is replaced by pointers to the statements.

DEFINED: second file statements (see Appendix D.8) are created and the source text is replaced by pointers to the statements.

POSITION: the position constant is converted to binary.

PICTURE: a picture table entry (see Appendix C.7) is created and inserted into the picture chain; similar pictures share the same picture table. The source text is replaced by a pointer to each entry.

USES and SETS: USES and SETS attributes are moved into dictionary entries, and pointers to the entries replace the source text.

LIKE: BCD entries are created for identifiers with the LIKE attribute.

LABEL: if the LABEL attribute has a list of statement label constants attached, a single dictionary entry is created. The dictionary entry contains the dictionary references of the statement label constants in the list.

OFFSET and BASED: Second file statements are made and text references are inserted in the DECLARE statements for these attributes.

AREA: Fixed-length specifications are converted to binary; second file statements are made for expressions; a code byte, followed by the length of text reference, is inserted in the DECLARE statement text.

All other attributes, identifiers, or constants are skipped.

Phase EL (EK, EM)

Phase EL, consisting of modules EK, EL, and EM, scans the chain of DECLARE statements constructed by the Read-In Phase.

An area of storage known as the attribute collection area is reserved. This is used to store information about the identifiers, and has entries of a similar format to that for dictionary entries.

Complete dictionary entries are constructed for every identifier found in a DECLARE statement. These identifiers can be one of the following types:

1. Data Items (see Appendix C.4)
2. Structures (in this case, the 'true' level number is calculated) (see Appendix C.4)
3. Label Variables (see Appendix C.4)
4. Files (see Appendix C.7)
5. Entry Points (see Appendix C.2)
6. Parameters (see Appendix C.7)
7. Event Variables
8. Task Variables.

Identifiers appearing as multiple declarations are rejected and a diagnostic message is given.

The attributes to be associated with each identifier are picked up in three ways.

First, the attributes immediately following the identifier are stored in the attribute collection area.

Secondly, any factored attributes and structure level numbers are examined. These are found by using the list of addresses placed in scratch storage by Phase EI. Each applicable attribute is marked in the attribute collection area, and any other information, e.g. dimension table address, or picture table address, is moved into a standard location in the attribute collection area. All conflicting attributes are rejected and diagnostic messages are given.

Finally, any attributes which are required by the identifier, and which have not been declared, are obtained from the default rules.

After the dictionary entry has been made, furtner processing (e.g. linking of chains, etc.) must be done in the following cases:

1. DEFINED data
2. Data with the LIKE attribute
3. Files
4. Strings with adjustable lengths
5. Arrays having adjustable bounds
6. GENERIC identifiers
7. Structure members
8. Identifiers with INITIAL CALL
9. Identifiers with the INITIAL attribute

After the declaration list has been fully scanned and processed, it is erased.

Phase EP

Phase EP first conditionally marks later phases as 'wanted' or 'not wanted,' according to how certain flags in the dictionary are set on or off. This assists in the load-ahead technique.

The entry type 1 chain in the dictionary is then scanned. For each PROCEDURE entry in the chain, each entry label is examined for a completed declaration of the type of data the entry point will return when invoked as a function. If this has previously been given in a DECLARE statement nothing further is done, otherwise entry type 2 and 3 dictionary entries are constructed from default rules (see Appendix C.2). If this default data description does not agree with the description derived from the PROCEDURE or ENTRY statement, a warning message is generated.

At each PROCEDURE entry, the chain to the ENTRY statement entry type 1 is followed. Each statement is treated in a similar manner to that for a PROCEDURE entry type 1.

The CALL chain is then scanned and, at each point in the chain, the dictionary is searched for the identifier being called. If the correct one is not found, a dictionary entry for an EXTERNAL procedure is made (see Appendix C.2), using default rules for data description. Before making the entry, the identifier is checked for agreement with any of the built-in function names. If there is agreement, a diagnostic message is generated, and a dummy dictionary reference is inserted.

If an identifier is found, it is examined to see if it is an undefined formal parameter. If it is, the formal parameter is made into an entry point, again using default rules for data description. If it is not, or if the declaration of the formal parameter is complete, the type of entry is checked for the legality of the call. A diagnostic message is generated if the item may not be called. In all cases, the item called is marked IRREDUCIBLE if it has not previously been declared REDUCIBLE.

Phase EW (EV)

Phase EW is an optional phase, loaded only if any LIKE attributes appear in the source program.

This phase scans the LIKE chain which has been constructed by Phase EK, and completes the dictionary entry for any structure containing a LIKE reference. When a structure in the LIKE chain is found, its validity is checked, and dimension data and inherited information are saved. The dictionary is scanned for the reference of the "likened" structure and the entry is checked for validity.

This dictionary entry (see Appendix C.4) is copied into the dictionary, with alterations if there is a difference between the original structure and this structure with regard to dimensioned data. If both structures have dimensions a straight copy is made; if the structure with the LIKE attribute has dimensions and the likened structure has not, the dimension information is added to the copy; if the structure with the LIKE attribute is not dimensioned and the likened structure is, then the dimension data is deleted from the copy. Inherited data is added to the copy. If an error is found, the structure with the LIKE attribute is deleted and a base element copy of the master structure is inserted instead. Where copies of entries occur which refer to dimension tables with variable dimensions, the dimension table entry is copied, and new second file dictionary entries and statements are created. Similar entries must be made if the structure item has been declared to be an adjustable length string, or has been declared with the INITIAL attribute.

Finally, the newly completed structure is scanned by the ALIGN routine in phase EV, to provide correct explicit/inherited/default alignment attributes for its base elements.

Phase EY

Phase EY is an optional phase which processes all ALLOCATE statements.

The second file is scanned first and all pointers to the dictionary are reversed. All ALLOCATE statements using the DECLARE chain are then scanned, and the dictionary references of allocated items are obtained by hashing the respective BCD of each item. The attributes given on the ALLOCATE statement for an item are collected together.

A copy of the dictionary entry of the allocated item is then made (see Appendix C.4), and the ALLOCATE statement is set to point to it. The dictionary entry is completed by including any attributes given on the ALLOCATE statement, and copying any second file statements from the DECLARE chain which are not overriden by the ALLOCATE statement.

In the case of an ALLOCATE statement in which a based variable is declared, no copy of the original dictionary entry is required. The BCD is replaced by the original dictionary reference.

All pointer qualified references in the text are checked to determine that the qualified variable is based. For every occurrence of a variable with a different pointer a new dictionary entry is made. If the variable is a structure the entire structure is copied. A PEXP second file statement is made for the pointer and the 'defined' slot in the new dictionary entry is set to point to it instead of to the declared pointer.

The BCD of the pointer and the based variable in the text are replaced by the new dictionary reference followed by padding of blanks which will be removed by phase FA.

The based variable can be the qualified name of a structure member. If this is so, the name is checked for validity. Only the first part or lowest level of the qualified name in the text is replaced by the dictionary reference of the member. It is preceded by a special marker to tell phase FA that a partially replaced name follows.

Phase FA

Phase FA scans the text sequentially. If, during the scan, qualified names are found with subscripts attached, they are reordered so that a single subscript list

appears after the base element name. The dictionary is scanned and references obtained for any identifiers which are contextually, file, event, pointer variables, or programmer-named ON conditions. If no reference is available, a new dictionary entry is made. The identifier is then replaced in the text by the dictionary reference.

If a constant marker is found, the dictionary is scanned to check if the constant is present. If it is not, a new dictionary entry is made (see Appendix C.7) and the resulting reference replaces the constant in the text.

If a P FORMAT marker is found, the dictionary is scanned for a picture entry in agreement. If there is no agreeing entry, a new dictionary entry is made (see Appendix C.7) and the picture chain is updated. The dictionary reference replaces the format marker in the text.

The CALL chain is removed from CALL statements. The appearance of PROCEDURE, BEGIN, END, and DO statements results in adjustments to the level and count stacks. If statement introduction code bytes appear (such as SN, SL, CL, and SN2), the current statement number is updated. All data items associated with the PROCEDURE, BEGIN, ENTRY, and DECLARE statements are removed, leaving only the statement identification and the keyword.

Phase FE

When an identifier is found, the hash chain is used to scan the dictionary for a valid entry. If one is found, its dictionary reference replaces the identifier in the output text. If no valid entry is found, and the BCD does not agree with any entry in the tables of BCDs of PL/I built-in functions, then a dictionary entry is made as if the identifier was declared in the outermost procedure. However, if the BCD agrees with a function name, and it is not in a SETS position, a function entry is made in the dictionary, and its reference is used to replace the identifier.

If a left parenthesis is found, the previous dictionary entry is checked for an array, function, or pseudo-variable. If it is one of these, the relevant marker is inserted in the text before the parenthesis (see Appendix D.1).

Checks are also made for the positions of function references in assignment statements. Any dictionary references encountered in the input file are moved directly to the output file.

PROCEDURE, BEGIN, DO, and END statements cause the current level count to be updated.

Phase FI

Phase FI scans the text and checks, where possible, the validity of dictionary references found. References in a GOTO statement are checked that they refer to labels or label variables and that the subsequent branch is valid. The code byte for GOTO is changed to GOOB (see Appendix D.1) if the branch is to a label constant outside the current PROC or BEGIN block. If the branch is to a label variable, GOOB is set up unless a label value list was given at the declaration, and all members of the list lie within the current block.

List processing based variables in ALLOCATE, FREE, READ, WRITE, and LOCATE statements are marked as requiring a Record Dope Vector (RDV). Variables in TASK and EVENT options on CALL statements are checked for validity.

References are checked if they appear where a file is expected. Items in data lists are checked for validity, and Data Element Descriptors (DEDs) and symbol bits are set on for all variables found in the lists.

Any errors which are found cause diagnostic messages to be generated and dummy references to be placed in the text in place of erroneous references.

Phase FK

Phase FK scans the attribute collection area for entries with the SETS attribute. The SETS lists in the dictionary entries are scanned, and their syntax checked. Identifiers are counted and replaced by their dictionary references. Constants are counted, converted to binary, and arranged in ascending order in the dictionary entry.

Phase FO

Phase FO makes a dictionary entry for each ON condition mentioned inside a block. For ON CHECK conditions multiple dictionary entries are made (see Appendix C.7), one for each BCD. If a similar condition is mentioned more than once in a block, only one dictionary entry is made for that

condition, except for file conditions, ON CONDITION, and ON CHECK, when separate dictionary entries are made for each different BCD name.

SIGNAL and REVERT statements are treated in a similar manner to ON statements.

The dictionary entries for each BCD name associated with file or CONDITION conditions are checked and, if in error, the ON, SIGNAL, or REVERT statement is replaced by an error statement. A diagnostic message is generated.

The BCD name of each file entry referred to in ON, SIGNAL, and REVERT statements is examined. If the BCD is SYSIN or SYSPRINT, the dictionary reference of the file entry is placed in a slot in the communications region.

A check is made to ensure that formal parameters do not appear in CHECK and NOCHECK lists. A single dictionary entry is created for each CHECK and NOCHECK list and a pointer to the entry is placed in the relevant entry type 1.

When dictionary entries are made for CHECK lists, one of three different check codes is used depending on whether the BCD is an ENTRY LABEL, a LABEL CONSTANT, or a variable.

List Processing POINTER and OFFSET variables in CHECK lists are treated as data variables. BASED variables may not appear in CHECK lists.

A dictionary entry is made for the list processing AREA condition. This condition is always enabled and may not appear in a condition prefix.

Dictionary entries are also created for each ON condition which is disabled for a particular PROCEDURE or BEGIN block, and for each ON condition whose status is changed within the block. Pointers to these dictionary entries are placed in the relevant entry type 1.

All dictionary entries for ON conditions are placed in the AUTOMATIC chain for the relevant PROCEDURE or BEGIN block.

A further, quite distinct, function of this phase is to substitute error statements for all statements containing dummy dictionary references (which have been inserted by previous phases on detecting a severe error). If a dummy reference is found in the second file, the compilation is aborted.

Wherever an element of a label array is initialized by appearing as a statement label, an assignment to a compiler label has been inserted by the Read-In phase. Phase FO checks the validity of each such assignment; for each array with this type of initialization, a second file dictionary entry is made, and all assignments to the array are chained.

Phase FQ

Phase FQ checks the validity of each item in the PICTURE chain in the dictionary (see Appendix C.7).

The precision for each correct picture is calculated, together with its apparent length, and stored in its dictionary entry. A data byte is created in the entry for use by Phase FT.

Invalid pictures cause appropriate diagnostic messages to be generated.

Phase FT

Phase FT performs certain housekeeping tasks. These are as follows:

1. The second file entries are scanned and pointers to each entry are inserted in the associated dictionary entry (see Appendix C.7).

2. Each item which has a storage class is inserted into the appropriate chain for that class (see Appendix C.4).

3. Constants are placed in the constants chain and their apparent precision is calculated. Sterling constants are converted to pence.

4. Dimension tables are separated for items which are not in structures, but which are arrays having similar bounds, but with different element lengths.

5. Items which are members of structures and which have "inherited" dimensions, i.e. are contained in a structure which itself is dimensioned, are made to inherit their dimensions. If a base element of a structure inherits dimensions which are not constant, second file statements (see Appendix D.8) are set up to initialize the bounds in the object time dope vector.

6. Items which have expressions to be evaluated at prologue time, e.g.

parameter descriptions for entry points and defined items, are placed in the AUTOMATIC chain for the appropriate block.

7. The dictionary entry for any item described by a picture is expanded by the precision and scale or string length, extracted from the picture table entry. Identifiers of different modes sharing the same picture table are now placed in separate tables.

8. The 'dope vector required' bit (see Appendix C.5) is set on where necessary.

9. When a label array is found which has initial label statements for any of its elements, the chained statements are moved into the second file. The original statement is left in the text, to be removed by Phase FV.

10. Dictionary entries similar to label BCD entries are made for all TASK variables.

Phase FV

Phase FV scans the second file and reverses the pointers to the dictionary.

Dictionary entries for DEFINED data are completed (see Appendix C.4 and C.5). Overlay and correspondence defining are differentiated between, as are static and dynamic defining. A preliminary check of the validity of defining is also carried out.

When PROCEDURE and BEGIN statements are encountered, any second file statements associated with data in the AUTOMATIC chain for that block are inserted in the text following such statements.

When ALLOCATE statements are found, any second file statements associated with the item being allocated are inserted in the text following the statement.

When a reference to dynamically defined data is found, the base reference is inserted into the text following the defined reference.

When an initial label statement is encountered in the main text, it is not copied into the output string.

The dictionary reference of a POINTER in a PEXP (pointer expression) second file statement is inserted into the defined slot of the associated based variable. If the based variable is a structure this reference is propagated throughout the structure. The PEXP statement is then deleted.

A similar procedure is performed for BVEXP (based variable expression) second file statements whereby the dictionary reference of the AREA is inserted into the dictionary entry of the associated OFFSET variable.

ADV second file statements referring to a BASED variable are checked for compliance with the (F) implementation rules. If the rules are obeyed, the dictionary entry of the 'bound' variable is inserted in the appropriate slot in the multiple table entry.

If an MTF statement refers to a based variable the appropriate bound slot is copied from one multiple table entry to the other.

Phase FX

Phase FX is an optional phase entered only if the ATR (attribute list) or XREF (cross-reference list) option is specified. It scans the STATIC, AUTOMATIC, and CONTROLLED chains, and the formal parameter lists.

For each identifier it creates an entry in text scratch storage of the form:

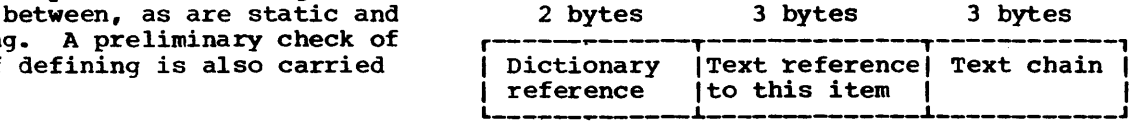

This entry is inserted into a chain of similar entries in the alphabetical order of the BCD of the identifier.

If the XREF option is specified, the text is scanned for dictionary references. When the dictionary reference of an identifier is found in the text, an entry is created in a chain of entries from the dictionary entry of the identifier. If the identifier is that of a BASED item, an entry is also created in a chain of entries from the dictionary entry of the associated pointer.

Each chain member thus represents a text reference to an identifier and has the form:

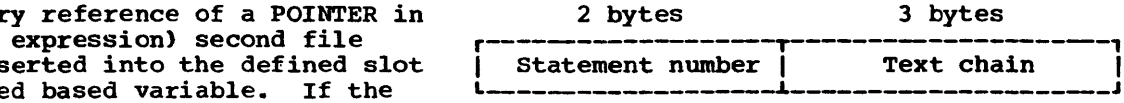

Each reference chain for an identifier is in text scratch storage.

The sorted chain of identifiers is then scanned, and for each entry in the chain the following actions take place:

1. The statement number of the DECLARE statement, if any, in which the identifier was declared is printed

2. The BCD of the identifier is printed.

3. If the ATR option is specified, the dictionary entry of the identifier is analyzed and its attributes are printed. For variables having constant dimensions and/or constant string lengths, these dimensions and lengths are printed.

   Except for file attributes, the attributes printed will be those obtaining after conflicts have been resolved and defaults applied. Since the file attribute analysis does not take place until after the attribute list has been prepared (see Phase GA), file attributes in the list are those supplied by the programmer, regardless of conflicts.

4. If the XREF option is specified, the reference chain for the identifier is scanned, and the statement number contained in each entry is printed

Finally, all scratch storage is released and control is passed to the Pretranslator Phase.

THE PRETRANSLATOR LOGICAL PHASE

The purpose of the Pretranslator Phase is to expand those statements in the language that can be broken down into simpler statements, and to insert explicitly generated statements in place of implied ones.

Second level markers (see Appendix D.1) are removed from internal compiler codes, and some of the I/O statements are changed into a form more suitable for the pseudo-code phase.

Argument lists are examined and the matching of arguments with parameter descriptions takes place, with temporary variables being created where necessary, e.g., where data conversions are required.

If the compilation contains ON CHECK conditions the appropriate calls to the library routine are provided.

Any structure assignments containing the BY NAME option are processed.

If any structure assignment statements or structures in I/O lists are detected in the program, they are expanded into scalar assignments and DO groups.

If the program contains any array assignments, or array expressions in I/O lists, these are expanded into DO loops and scalar assignments or expressions.

If the program contains iSUB references, the subscripts are computed for the base array corresponding to the subscripts given for the defined array.

Additions to the Text

In addition to changing the content of the text, the Pretranslator introduces some new symbols and grammatical forms into the source text. These are as follows:

The Umbrella Symbol: this is designated by the symbol code X'5E', which is used to introduce a literal as an operand. It is used only as a bound of a DO loop, or in a call of the dope vector pseudo-variable.

Statements within statements: a list of statements may be introduced within another statement. In this case the inserted list is enclosed in parentheses. Statements in the list are given no statement number field, but they have semi-colons at the end.

I/O statements: the form of I/O statements is changed considerably during the pretranslator phases, as explained in the description of Phase GB.

BUY and SELL statements: special statements are introduced for manipulating temporary storage at object time: they have a form similar to ALLOCATE and FREE statements.

Temporary Storage: Pretranslator phases create temporary variables for function and procedure calls where the arguments do not match the final parameters, where expressions appear as arguments, for control variables for DO loops in array and structure assignments, and for iSUB defined subscript lists. The Pretranslator has no mechanism for evaluating expressions. Therefore, temporaries which have no data type are created for expression arguments with no parameter

description. Such temporaries are known as 'chameleon' temporaries. The data type of these chameleon temporaries is completed by the Translator generic phase when the resultant data type of the expression has been determined.

When the Pretranslator creates a temporary from an argument which contains any array with adjustable bounds or adjustable string length, compiler functions (see Appendix D.8) are generated in-line, to set up the adjustable quantities at object time, to enable storage of the correct size to be acquired by means of the BUY statement.

The temporary variables created by the Pretranslator have dictionary entries similar to variables declared in the source program, except that the temporaries do not have BCD names.

Phase GA

Phase GA is an optional phase which scans the STATIC chain for file constants and OPEN control block entries.

For file constants a DECLARE control block is constructed from the file name and attributes, while checking the attributes for consistency. For file constants with the ENVIRONMENT option a dictionary entry is constructed, chained from the file constant, containing the storage image of the 56-byte DECLARE control block.

For OPEN control block entries an OPEN control block is constructed from the attributes in the entry, a check is made for consistency, and another dictionary entry, chained from the OPEN control block entry, is constructed. This new entry contains the 8-byte storage image of the OPEN control block.

When the COBOL option is encountered in the ENVIRONMENT string of a FILE statement, phase GA sets the low-order bit in the fifteenth byte of the FILE dictionary entry. Although this action overwrites the dictionary reference of the ENVIRONMENT string, it is permissible since GA is the only phase which processes this string.

The EXCLUSIVE second level marker is recognised in the file attribute dictionary entry during the diagnostic check and construction of the DCLCB or the OCB.

Phase GB (GC)

Phase GB, containing Modules GB and GC, processes I/O statements. GB removes all second level markers from internal character codes (see Appendix D.1). It then reorders the options so that either EDIT, DATA, or LIST options appear last.

In data lists the DO specification is moved so that it precedes the relevant list, and the END statement is added.

In format lists iteration factors are expanded.

RECORD I/O statements for which the COBOL file option is recognized are examined for validity by GC. Diagnostics are put out for LOCATE and READ SET statements for which COBOL files are used. A temporary variable is created to assist such data transfers as occur when a COBOL record is read into or written from a structure which does not consist entirely of one of the followig:

- doubleword data
- fullword data
- halfword binary data
- character string data
- aligned bit string data
- a mixture of character string and aligned bit string data

I/O activity found within a PROCEDURE or BEGIN block causes the bit X'10' to be set to one in the optimization byte of its entry type 1.

Phase GK

Phase GK scans the source text for function references. If it finds one, it inserts a special marker byte before the argument list, followed by:

1. Two code bytes giving information about the type of function, and whether it was called with the TASK option
2. The current statement number
3. The current block level and count

This phase also inserts a special argument marker before each argument in the list, followed by the reference of the

corresponding parameter and a code byte to show whether or not the argument is specified in a SETS list. The number of arguments present is checked against the number given as required by the corresponding dictionary entry.

NULL, NULLO, and EMPTY built-in functions are recognised and converted to constants.

Phase GO

This phase acts as a pre-processor for phase GP.

Phase GP

Phase GP scans the text for procedure and function calls with arguments. These are detected by the special markers inserted by Phase GK.

Temporaries (see Appendix C.4) are created for any arguments which are expressions. (An expression is defined as being any sequence of variables and operators, other than single variables followed only by a subscript list, or only by a defined subscript list and then a subscript list). If a parameter description has been declared in an entry declaration, the temporary which is created is of the same type as the parameter description. Otherwise, a 'chameleon' temporary of unspecified data type is created, its type being subsequently completed when the expression type has been determined by the Translator generic phase.

Expressions are scanned for arrays (including partially subscripted arrays), structures, or the end of the expression, in order to determine the highest form of aggregate in the expression, so that the correct type of temporary may be created.

Where the expression contains a partially subscripted array, a temporary is created with a dimensionality equal to the number of cross sections specified in the subscript list.

When single arguments are specified together with parameter descriptions, the arguments are compared with the parameter description. If there is a lack of match, action may be taken in one of two ways.

1. If the data types are compatible, a warning message is printed, and a temporary is created
2. If the data types are incompatible, an error message is printed, and the parameter description is ignored

When the argument is a single partially subscripted array which matches the parameter, a special temporary is created which has the same dimensionality as the number of cross sections in the subscript list, and it appears to be defined upon the original argument. Code is then generated to initialize the temporaries, multipliers, and virtual origin from the dope vector of the original argument and the subscript list.

Whenever a temporary is created, a BUY statement contained in nested statement brackets is inserted in the output text, followed by the assignment of the expression or non-matching argument to the temporary. After the end of the PROCEDURE or function call, all the temporaries generated in the call are released by means of a SELL statement in nested statement brackets.

In all argument temporaries created by phase GP, other than those created for constants, a special flag bit is set on (see Appendix C.2), but in the case of temporaries created for arguments to built-in functions, this bit is turned off by phase IM. This bit is used in phase QU when halfword instructions replace fullword instructions in the manipulation of halfword binary operands which are temporary arguments.

Temporaries are created for constants which are specified as arguments to functions defined by the programmer.

If a TASK, EVENT, or PRIORITY option is present in a CALL statement, then any temporaries which are created are of the 'not sold' type.

If GENERIC entry labels are specified as arguments to procedures, a special dictionary entry is made which contains the argument and parameter description dictionary references, to enable the Translator generic phase to select the correct generic member.

A warning message is printed whenever a temporary is created for an item declared in a SETS list.

When subscript lists for the number of cross sections are being checked, a severe error message is printed if a subscript list contains too many subscripts, and the statement is deleted.

Phase GU

Phase GU scans the source text for PROCEDURE, BEGIN, and END statements, and for statements that may raise a possible CHECK condition.

A list of all items currently checked is extracted from the CHECK and NOCHECK lists present in PROCEDURE and BEGIN statements.

Items contained in statements that may raise a CHECK condition are examined and compared with the list of currently checked items. If the item appears in the list, a SIGNAL CHECK statement is created for it, either before the statement concerned (for labels and entry names) or after it (for variables).

Phase HF

The purpose of phase HF is to detect structure assignment statements, possible structure expressions in data lists in GET and PUT statements, and nested statements, in particular nested structure assignments.

The leftmost structure in an expression or assignment is used as a basis for comparison, and if similar structuring is not found throughout the expression or assignment, diagnostic messages are issued. Any expression containing no structures is left unchanged.

The base elements of the structures are found, and if the referenced structures are dimensioned, a temporary is created for each dimension. It is then added to the AUTOMATIC chain for the appropriate block. Iterative DO loops are constructed, with the temporaries iterating between the upper and lower bounds of that particular dimension. Base elements are assigned, with the temporaries as subscripts, and with scalars remaining unchanged. END statements are created for the DO loops, and SELL statements for the temporaries. The statements which have been created are nested within the original statement.

Phase HK

The purpose of Phase HK is to detect array or scalar assignments, possible array expressions in I/O lists in GET and PUT statements, and nested statements, in particular nested assignment statements.

The leftmost array in an expression, or the leftmost array or scalar in an assignment is used as a basis for comparison, and if similar dimensions or bounds are not found in the array references, diagnostic messages are issued. Any expression containing only scalars is left unchanged.

For unsubscripted arrays which are equally spaced in storage only one temporary is bought. For all other arrays a temporary is bought for each dimension, except in the case of certain partially subscripted arrays where the number may be minimized. Each temporary will be added to the AUTOMATIC chain for the appropriate block. If the ON-condition name SUBSCRIPTRANGE is enabled for any statement, a temporary will be bought for each dimension in all cases. Iterative DO loops are constructed: for an unsubscripted array expression of dimensionality N, the temporary will iterate between the lower bound of the Nth dimension and an evaluated product so that all elements of the array are processed; while for other arrays the temporaries will iterate between the lower and upper bound of the particular dimension of the array. The assignment statement is added to the output string with additional subscripts where necessary. End statements are created for the DO loops, and SELL statements for the temporaries. The statements which have been created are nested within the original statement.

The syntax of pseudo-variables is also checked.

Phase HP

Phase HP scans the source text for references to items defined using iSUBs. For each reference found, the subscripts are computed for the base array corresponding to the subscripts given for the defined array.

The subscripts of the defined array are assigned to temporaries specially created for this purpose, which are then used to replace the iSUBs in the defining subscript list. The base array, with the subscript list so formed, replaces the defined array in the text.

THE TRANSLATOR LOGICAL PHASE

The Translator Phase consists of two physical phases, the stacker phase and the generic phase. The purpose of the

Translator is to convert the output from the Pretranslator into a series of "triples" (see Appendix D.4). A "triple" is in the form of an operator followed normally by two operands.

The translation is achieved by using a double stack, with one part for operators, and the other part for operands, and assigning two weights to each operator. One weight (the stack weight) applies to the operator while it is in the stack, and the other weight (the compare weight) applies when the operator is obtained from the input string.

When an operator is obtained from the input string it is compared with the top stack operator. Depending on the result of the comparison, one or other of the two operators is switched on to determine what action is next to be performed. Apart from some special cases, this action is usually either to continue to fill the stack, or to generate a triple. The special cases lead to various manipulations of the stack items, after which the translation process continues.

For the purposes of translation, the input text to the translator is considered to consist of operators and operands only. This means that I/O options, etc., are regarded as operators.

After translation, the text string consists of operands and operators. All statements start with an operator to indicate a statement number or label, followed by the statement type, which may be a single operator, as in the case of RETURN or STOP, or which may be an operator such as a function or subscript marker, followed by a list of arguments. This list may also include compiler generated statements, e.g., DO loops for I/O lists. All I/O options are regarded as operators and require no markers before them. The end of the source text will be marked by a special operator, and compiler generated code, which may follow this end-of-program marker, will appear between the marker and the special second-end-of-program marker. The end of a block of text will be marked by an EOB operator. The program is now assumed to be syntactically correct.

Phase IA

Phase IA rearranges the source text into a prefix form, in which parentheses and statement delimiters have been removed, and the operations within a statement have been so arranged that those with the highest priority appear first.

As operators and operands are encountered, they are stored in stacks. Tables give the priority of each operator as it appears in the input text and in its stack.

When an operator is found during the scan of the source text, its compare weight (see Appendix D.4) is tested against the stack weight of the top operator in the stack. If the compare weight is the lesser of the two, then action is taken according to the compare operator. This is referred to as the compare action. Similarly, if the compare weight for the current operator found in the scan is greater than or equal to the stack weight of the top stack operator, action is taken according to the top stack operator. This is referred to as the stack action. Normally, the compare action is to place the compare operator in the stack, and to continue the scan, placing any subsequent operand in the stack until another operator is found. The normal stack action is to generate a triple, consisting of the top operator in the stack and the top two operands, eliminating the items from the stack, and inserting a special flag as the operand of the triple which is now at the top of the stack. The source (compare) item is then compared with the new top stack item.

The output text of the stacking phase is in the form of a series of triples, i.e. statement types with no operands, and operators with one or two operands. If the result of a triple operation is to be used in a later triple, the appropriate result is flagged accordingly.

Certain phases are marked wanted or not wanted at this stage. If the source text contains an invocation by CALL or function reference, Phases IL and IM are marked wanted. If it does not, Phases IL, IM, IN, IO, IP, IQ, MG, MH, MI, MJ, MK, MM, MN, and MO are marked not wanted. Phases MB and MC are marked wanted when the source text contains pseudo-variables or multiple assignments; otherwise, they are marked not wanted. The DO loop processing phases (LG and LH) are marked in co-operation with the dynamic initialization phases (LB and LC). If LB and LC are requested, the marking of LG and LH is left until that stage of compilation; otherwise, LG and LH are marked by Phase IA independently.

When ALLOCATE and FREE statements occur, phase NG is marked wanted. When LOCATE statements occur, phase NJ is marked wanted.

Phase IG

Phase IG is an optional phase which is loaded to process array and structure arguments to built-in functions. When aggregate arguments are given for built-in functions they are expanded by the structure and array assignment phases so that the built-in functions appear as base elements, subscripted where necessary.

Phase GP examines these arguments, and ascertains whether it is necessary to create a dummy. If it is necessary, a scalar dummy is created, but the assignment of the argument expression is not inserted in the text, as this would be an invalid aggregate assignment.

Phase IG examines the text for a BUY statement for a dummy for an aggregate argument to a built-in function, and then inserts an assignment triple in the correct place in the text.

Phase IK

This phase immediately precedes the phase IL and shares with it the initialization processes required by the main generic phase IM. It obtains text block storage and moves into it routines and a table that will be used later by the main generic phase. Part of the storage is reserved for use by the main generic phase as a nested function stack area. Control is passed to phase IL.

Phase IL

This phase immediately precedes the main generic phase IM and completes the initialization process begun by phase IK. It obtains 4K bytes of scratch storage and places in it the entire built-in function table and a list of constants used by the main generic phase. Registers are set to point to the built-in function table, to the list of constants, and to the nested function stack area reserved by phase IK. Further text block storage is obtained for use by the main generic phase and a register is set to point to it. Control is passed to phase IM.

Phase IM

This phase is the main generic processor. It scans the source text for procedure invocations by a CALL statement, procedure or library invocations by a function reference, and assignments to "chameleon" dummy arguments (see Phase GP).

Any procedure which is generic and is invoked by a CALL statement or function reference is replaced by the appropriate family member. If the invoked procedure is non-generic, it is ignored. A generic library routine invoked by a function reference is also replaced by the appropriate family member.

The arguments passed to library routines are checked for number and type, and a conversion inserted where necessary and possible.

The type and location of the result of all function invocations is placed in the text which follows the end of the text which invoked the function. The resulting type of an expression assigned to a "chameleon" dummy is determined and set in the dictionary entry which relates to the dummy.

The argument bit, set on for all argument temporaries created by phase GP, is turned off for arguments of built-in functions.

Phase IT

Phase IT scans the source text for function triples and, in particular, the built-in functions for which code will be generated in-line. Further tests are made to detect the functions which, according to the method used to generate in-line code, are optimizable. This applies only to the SUBSTR, UNSPEC, and INDEX functions. All references to 'chameleon' temporary assignments within the scope of these functions are removed subject to certain restrictions imposed by the function nesting situation.

Phase IX

Phase IX checks that POINTER and AREA references are used as specified by the language. This phase is loaded only if POINTER or AREA references are found, declared either explicitly or contextually. Error messages are produced if errors are found and the statement in error is erased.

Data type triples in the text are scanned and a stack of temporary results is created containing the values:

X'40' for POINTER
X'02' for AREA
X'00' for any other data type

The maximum permitted number of temporaries at any one point in a program is 200. The compilation is terminated if this figure is exceeded.

Phase JD

Phase JD scans the text for concatenation and unary prefixed triples with constant operands. These are evaluated and the results are placed in new dictionary entries. The references are passed through a stack into the corresponding result slots in the text.

THE AGGREGATES LOGICAL PHASE

The Aggregates Phase consists of three physical phases, the preprocessor (phase JI), the structure processor (phase JK) and the DEFINED chain check (phase JP).

The structure processor phase carries out the mapping of structures and arrays in order to align elements on their correct storage boundaries.

The DEFINED chain check ensures that items DEFINED on arrays and structures can be mapped consistently.

Phase JI

The first function of phase JI is to obtain scratch storage in which the text skeletons contained in phase JJ are to be held. Phase JJ is then loaded, and its contents are moved to the scratch storage for subsequent use by phases JI and JK. Phase JJ is then released and control is returned to phase JI.

The main function of phase JI is to expedite data interchange activities. A scan of static, automatic, and controlled chains is performed. The chains are reordered so that all data variables appear before non-data items. Adjustable PL/I structures and arrays are detected. Each entry in the COBOL chain is mapped as far as possible at compile-time, removed from the chain, and placed in the appropriate AUTOMATIC chain.

Phase JK

This phase scans the AUTOMATIC, STATIC, and CONTROLLED chains for arrays, structures (including COBOL structures), adjustable length strings, DEFINED items, AREA, and POINTER arrays and structures, TASK and EVENT arrays, and TASK and EVENT arrays in structures.

For the base elements of structures without adjustable bounds or string lengths, the following calculations are made:

The offset from the start of the major structure

The padding required to align the elements on the correct boundary

All multipliers of arrays of structures.

For all minor structures and major structures the following calculations are made:

Size

The offset from the preceding alignment boundary with the same value as the maximum appearing in the structure

Where a structure contains adjustable bounds or string lengths, code is generated to call the Library at object time.

For arrays, the multipliers are calculated, unless the array contains adjustable items, in which case the Library performs the calculations.

For adjustable structures, arrays, or strings, code is generated to add a symbolic accumulator register into the virtual origin slot of the dope vector, and the accumulator register is incremented by the size of the item.

Calculations are made in a similar fashion for arrays of strings (in structures or otherwise) with the VARYING attribute. In addition, code is generated to set up an array of string dope vectors which refer to the individual strings in the array using the dope vector. Code is also generated to convert the original dope vector to refer to the array of string dope vectors, instead of to the storage for the array.

The routine which generates code for arrays of VARYING strings is also used to generate code for the initialization of arrays of TASK, EVENT, and AREA variables.

DEFINED items are processed in the following way:

Code is generated to set the multipliers and virtual origin address of correspondence defined arrays without iSUBs in the dope vector of the DEFINED items from the defining base dope vector.

Code is generated for overlay DEFINED items if they do not fall into the class which is to be addressed directly. The code first maps the DEFINED item, if necessary, calculates the address of the start of the storage to be used by the DEFINED item, and finally, relocates the DEFINED item using this address.

Dope vector descriptor dictionary entries and record dope vector dictionary entries are made for items which need to be mapped at object time, or which appear in RECORD-oriented input/output statements.

Phase JP

Phase JP scans the DEFINED chain, and differentiates between the following:

1. Correspondence defining
2. Scalar overlay defining
3. Undimensioned structure overlay defining
4. Mixed scalar-array-structure-string class overlay defining

In correspondence defining, this phase differentiates between arrays of scalars and arrays of structures. It also checks that the elements of the defined item which may validly overlay the elements of the base belong to the same defining class, and that the base is contiguous.

In scalar overlay defining, this phase checks that the defined item may validly overlay the base.

For undimensioned structure overlay defining, this phase checks that the elements of the defined item may validly overlay the elements of the base.

For mixed scalar-array-structure-string class overlay defining, this phase checks that all elements of the defined item and all elements of the base belong to the same defining class (bit or character), and that the base is contiguous.

THE OPTIMIZATION LOGICAL PHASE

The optimization logical phase consists of several physical phases and is loaded if OPT=2 is specified in the PARM field of the EXEC statement.

The work done during the Optimization Phase can be split into two parts. The first consists of testing the text and dictionary to see if optimization is permissible. As a result of these tests, tables are built pointing to optimizable text. The second part consists of code generation and modification requiring scanning of the tables built in the first part, and direct references to the text and dictionary.

All code generation resulting in text expansion is placed in a patch file, and the point of insertion in the text is overwritten with a PTCH triple pointing to the patch. The last physical phase merges the patch text into the main program text.

Optimized code is produced for subscript address calculations and iterative DO-loop control. In the case of subscripts most of the optimized code consists of reordered triples, but optimized loop control code is generated as pseudo-code using BXLE, and BXH instructions.

Only simple loops and subscript lists are optimized, and the variables involved must be real, fixed binary, scalar integers and the constants must be decimal integers.

The two main problems in deciding whether it is permissible to optimize code are:

1. Aliasing of variables
2. The action of the program for exceptional conditions

Optimization is inhibited where it is difficult, or impossible, to decide that optimization will produce an object program which will execute according to the rules of PL/I. The keyword REORDER, indicates to the Optimization Phase, that ON-units for exceptional computational conditions may be ignored. This enables more cases to be optimized than for the default setting of ORDER.

Three types of subscript optimization are performed:

1. Transformation Where possible, a control variable used as a subscript is transformed such that, instead of a 'subscript * multiplier + virtual origin' address calculation, each iteration produces a simple increment of a register to access the next element.

2. Invariance Where possible, an invariant subscript calculation inside a DO-loop is moved outside.

3. Commoning Where possible, a common subscript expression is only calculated once and this value is placed in a register to be used at later occurrences.

For array expressions an attempt is made to combine the incrementing of a transformed control variable with the BXLE or BXH of the optimized loop control code.

The text is optimized starting from the innermost of a nest of iterative DO-loops and working outwards. This enables patch code, which moves out of a DO-loop, to be included in the processing of the enclosing DO-loop, hence moving out code as far as possible in a nest of loops.

Phase KA (KB)

Contains utility routines and common data space used by the later optimization phases. Details of the utilities are given in Appendix K.

The utilities enable the optimization phases to build and process tables in text blocks without concern for physical block boundaries, status of text blocks, or maintaining pointers to first, last, and current table entries.

The facilities provided:

1. Define a table using a table control block area.

2. Add new entries to the end of a table. Table entries may be of fixed or varying length and a table can contain more than one type.

3. Scan a table forwards or backwards.

4. Make direct reference to table elements.

5. Delete a table.

6. Specify locking of entries.

7. Remove all locks on table entries.

Phase KC

Phase KC scans the text for DO-loop specifications. If the loop is potentially optimizable, then any expressions in the initial, the TO, or the BY specifications are assigned to temporary variables. The expression and the assignment are moved outside the loop and are replaced in the specification by a simple reference to the temporary variable.

Text is also scanned for ON-units. The occurrence of each type of ON-unit is recorded by the appropriate bit in the mask used by Phase KG.

Phase KE

Phase KE performs a scan of the dictionary and a scan of the text. The purpose of these scans is to mark variables 'unsafe' if they can possibly be affected by changes to other variables (i.e., aliases). Variables are marked unsafe if they are EXTERNAL, DEFINED, defined upon, BASED, or PARAMETERS, or if they are (or might be through being arguments of procedure calls) arguments of the ADDR built-in function.

In addition, during the text scan, the DO MAP table is created. This table contains an entry for each DO-loop and procedure in the source text. Each entry contains information describing the loop o procedure and giving its location in the text. A chain is constructed through thes entries giving the order in which they are to be processed by subsequent K phases.

Phase KG

Phase KG scans the text corresponding to each DO MAP entry in turn and builds up t lists which are chained off the DO MAP entry. The USE list is a list of all the real, fixed binary, scalar integer variables which are used within the loop. A flag byte indicates whether the variabl is assigned to or is invariant in the loo

The SUBS/REGION list consists of two types of entry:

1. A SUBS entry which contains the text

reference of a SUBSCRIPT triple referring to an array for which SUBSCRIPTRANGE is not enabled.

2. A REGION entry which contains the text reference of a triple which results in an assignment to one or more variables. There are four types of REGION boundaries:

   a. A GLOBAL region boundary which contains the text reference of a point where the value of any variable could be changed.

   b. A PARTIAL SAFE boundary which contains the text reference of a point where an assignment is made to a variable which is a SAFE real fixed binary scalar integer, followed by the dictionary reference of this variable.

   c. A PARTIAL UNSAFE region boundary which contains the text reference of a point where an assignment is made to an UNSAFE variable (not just a scalar). The dictionary reference is not inserted in this case.

   d. An ITDO region boundary which contains the text reference of an ITDO triple corresponding to an enclosed loop.

Phase KJ

Phase KJ creates the SUBS TABLE from the SUBS/REGION list produced by phase KG. The DO MAP created by KE provides the order of processing and further information.

The Region entries from the SUBS/REGION list are copied directly into SUBS TABLE whenever they occur. The SUBS entries from the list are expanded to contain information on the type of expression involved at this point. The USE list created by KG provides information during this analysis. The SUBS/REGION list is deleted by this phase.

The iterative specification triples of each DO-loop are inspected, and the spare operands used to set flags to indicate whether this loop is optimizable for BXLE or BXH loop control code.

Phase KN

Phase KN provides initialization of the scratch storage area used by phase KO.

An initial text scan is made in DO MAP sequence, to remove offsets from optimizable subscript lists and produce hash totals for optimizable subscript expressions. The hash totals are placed in the SUBS/REGION table and are used in phase KO to speed up the matching process.

Phase KO (KP,KQ)

Phase KO processes text in the order specified in the DO MAP, i.e., working through a nest of iterative DO-loops and procedures from innermost outwards.

The three types of subscript optimization: transformation of the control variable; invariance; and commoning; are performed and optimized code is generated and inserted in a patch file. The code to be replaced in the original text is overwritten with NOP's and a PTCH triple points to the patch text.

All three types of subscript optimization require searches for multiple occurrences of the same expression in the text. This is done by scanning the SUBS TABLE for matching triple expressions in optimizable subscript lists. When a match is found a chain is constructed in the SUBS TABLE between the matched elements. The code is generated for one chain at a time)

Code generated for optimized subscripts may be inserted:

1. Before the ITDO triple, i.e., where an invariant subscript calculation is moved out of a loop or where the initial setting of a transformed control variable is required.

2. Before the ITD' triple, i.e., for the incrementing code of a transformed control variable.

3. After the ITD' triple, i.e., the DROP's for symbolic registers used in the optimized code.

4. At the point of use in the subscript list.

For array expressions the incrementing code for a transformed control variable will be deleted if a BXLE or BXH can be generated which will increment the transformed control variable and control the number of iterations of the loop.

USSL declarations may be inserted in the optimized code to indicate that registers have priority and need not be saved and restored at branch points. The register allocator phase gives these registers priority over normal symbolic registers.

Phase KT

Phase KT is a renamed replacement of phase LA which is now obsolete. It is always loaded. This phase is a utility phase which remains in storage throughout the remainder of the Optimization Phase and the whole of the Pseudo-Code Phase. It provides the main scanning routines to handle input and output of text containing triples and pseudo-code.

The routine/subroutine directories in Chapter 3 give a complete list of the routines provided, together with brief descriptions of their functions.

Phase KU(KV)

Phase KU has three main functions performed during a single text scan.

The first function is DO-loop control optimization. Each ITDO triple encountered during the text scan is checked to determine whether or not it has been flagged as being optimizable by a previous phase. If not flagged the scan is continued. All DO-loop control specifications headed by an ITDO triple flagged as optimizable are replaced in text by an optimized pseudo-code group using the BXH and BXLE instructions. There are three basic forms to this optimized pseudo-code control specification, the particular one used for any loop depending on the type of step.

The second function is to detect each of the PTCH triples inserted into text by a previous phase. The corresponding patches are obtained from patch file text blocks and are processed as necessary before being inserted into text in place of the PTCH triple.

The last function is that of the subscript list processing. Each innermost subscript list encountered, as indicated by the presence of a SUBS triple in the main text, is checked for the occurrence of COMA or COMR triples within it. The SUBS triple is then altered as may be necessary.

THE PSEUDO-CODE LOGICAL PHASE

The Pseudo-Code Phase accepts the output of the Translator Phase, and converts the triples into a series of machine-like instructions. The transformation into pseudo-code is achieved by a series of passes through the text; each pass removes certain triples and replaces them by pseudo-code, until the entire text is in pseudo-code form. On completion of this phase, control is handed to the Storage Allocation Phase.

Pseudo-Code Design

Pseudo-code is essentially a one-for-one symbolic representation of machine code, designed so that it can be transformed directly into executable machine code by an assembly process.

Pseudo-code is constructed in basic units, the majority of which have a standard size of three or five bytes. A variable sized unit, however, is also available to allow flexibility, its length being specified by a length code within the unit. The formats of pseudo-code instructions are shown in Appendix D.6.

A unit consists of a one-byte operation code followed by normally, a two- or four-byte field, or on the other occasions by a variable length field. The bit pattern of the operation code indicates the type of unit which it heads.

Pseudo-Code Items

In addition to there being one pseudo-code item for each machine instruction which could be generated, there are also pseudo-code items which are produced to convey information from one phase of the compiler to another.

These items of information have the same format as a pseudo-code item, so that the handling and scanning of the source text is standardized. They do not, however, appear in the final object code.

Register Description

In all cases where a general purpose register appears in pseudo-code, it will be described symbolically. When conventional

registers are required in, for example, calling sequences, the registers will be referred to physically, as they will be in all cases of floating-point register usage.

The Use of Symbolic Unassigned Registers

Whenever a new register is required while pseudo-code is being generated, a symbolic register counter is incremented by one and, subject to this new value not being greater than 16,383, it is used as the symbolic name of the required register. When this register is no longer required a DROP pseudo-code item is inserted into the text to indicate to the Register Allocation Phase that the physical register allocated to this symbolic register may be reassigned.

The Use of Physical Registers

Physical general purpose registers will be used either as arithmetic registers or as parameter registers.

With arithmetic registers, it is the responsibility of the pseudo-code generation phases to save and restore the registers as necessary. This will apply both to the general purpose arithmetic registers (namely 14 and 15) and to the four floating-point registers. Although this is of primary interest to the expression evaluation phases, it should be realised that all phases which generate calling sequences must be aware of the current status of arithmetic registers, and generate code to save and restore them as necessary.

In the case of parameter registers, however, the Register Allocation Phase will be able to save and restore them as required.

Temporary Descriptors

As expressions are evaluated, a series of intermediate temporary results are obtained. These results, or their addresses, may be contained in symbolic or assigned registers, in a dictionary reference, with or without an index register, or in workspace. Temporary descriptor triples (TMPD) are inserted in the text to enable the correct pseudo-code instructions to be generated from the triples. The format of TMPD triples is described in Appendix D.9.

Temporary Workspace

A block of temporary workspace is used to store intermediate results obtained in evaluating expressions at object time. Pseudo-code phases allocate the next available workspace location within the block, and then update the location pointer, whenever the necessity to save an intermediate result arises. The location of the intermediate result is then described for later phases by a TMPD in the text. Intermediate results are only required during the execution of single PL/I statements; they are never preserved from one statement to another.

At the end of the pseudo-code phases the maximum size of the temporary storage required in each PL/I program block is placed in a dictionary entry. The required amount of workspace is then allocated in each Dynamic Storage Area (DSA) by Phase PT.

Phase LB

Phase LB scans through the text for PROCEDURE, BEGIN, and ALLOCATE statement triples.

Whenever one of these is found, a scan is made through the immediately succeeding second file statements; this is for any IDV (initial dope vector) statement referring to a variable replication factor in the array initial string. Processing of these statements and of the corresponding array initial strings is then carried out.

On completion of this secondary scan, the action taken depends on which triple was originally found:

1. For PROCEDURE or BEGIN triples, a scan is then made of the AUTOMATIC chain in the dictionary. For any scalar variables that have been declared INITIAL, a set of triples is created and inserted into the text. For any array declared INITIAL, the initial string is scanned, and a mixture of triples and pseudo-code is generated.

2. For ALLOCATE triples, if the item has been declared INITIAL, the initial string is scanned, and a mixture of triples and pseudo-code is generated.

Phase LB also marks Phase LG (DO-groups) as wanted or not wanted; this is done in co-operation with Phase IA.

Phase LD

Phase LD scans the STATIC chain for any variables which have been declared INITIAL.

When a scalar variable is found, the phase constructs two dictionary entries: one for the constant, and one for the converted constant.

For arrays, the phase scans the initial value string, creating an initialization table in the dictionary. Replication factors are converted and inserted into the table; treatment of the constants is then as described for scalar variables.

Phase OS converts the constants to their specified internal form.

Phase LG

Phase LG scans the text for DO loops. A stack is maintained with each entry containing a description of a DO group. The stacking reflects the nesting of the DO groups. For each DO or iterative DO triple a new entry is made at the top of the stack.

DO specification triples are analyzed and expressions are assigned to temporaries; subscripts in the control variable are assigned to binary integer temporaries if they are themselves variable. At the end of each specification, pseudo-code and triples are generated to control the loop.

Triple operators (see Appendix D.4) peculiar to the specification of DO loops are removed from the text.

For control variables, other than simple scalars, text is placed in the DO stack and used at every appearance of the control variable in the generated text. During this time, a scan is also made for pseudo-variables, subscripts, functions, and argument markers.

Phase LR

The purpose of Phase LR is to save space during the expression evaluation phase, LS. It provides the initialization for Phase LS by obtaining 4,096 bytes of scratch storage and setting stack pointers. The scan phase is initialized and Phase MP is marked.

The translate table for scanning triples, and the constants for expression evaluation are included in this phase and are moved to the first 1K area of scratch storage. Subroutines required by phase LS are also moved into scratch storage at this time. Finally, control is passed to Phase LS.

Phase LS

Phase LS scans the source text to convert expression triples to pseudo-code. If a triple produces a result, it is added to the temporary work stack.

For the arithmetic triples +,-,*,/,**, prefix +, and prefix -, the operands are combined to give the base, scale, mode, and precision of the result. If conversion is necessary, an assignment triple, with the target and source types as operands, is inserted in the text. In-line pseudo-code is generated for all operators except ** and some complex type * and / operators. In these cases, library calling sequences are generated. An intermediate result is always produced and the triple is removed from the text.

The operands of comparison triples GT, GE, equals, NE, LE, and LT are combined and converted as for the arithmetic triples. In-line pseudo-code is generated and the triple is removed from the text, unless both operands are string type, in which case a temporary is created. If the next triple is a conditional branch, a mask for branch-on-false is inserted. Otherwise, the result is a length 1 bit string.

For the string triples CAT, AND, OR, NOT, and string comparisons, if an operand is zero, TMPD triples, containing the intermediate result from the top of the stack, are inserted in the text after the triple. The result is a CHARACTER or BIT string or a compare operator.

When subscript triples appear, a symbolic register number is inserted in the triple. The result contains the dictionary reference of the array and the symbolic register.

For function triples, a description of the workspace for the function result is inserted in the TMPD triples which follow the function triples. The function result is added to the intermediate stack.

For add, multiply, and divide functions, the function and argument triples are removed from the text. Arithmetic type in-line pseudo-code is generated, with

modifications for the precision and scale factor, and the result is added to the intermediate stack.

With pseudo-variable triples, a special marker is added to the intermediate result stack.

Other triples which may use an intermediate result, are examined. If an operand is zero, two or three TMPD triples, containing the intermediate result from the top of the stack, are inserted in the text after the triple. If both operands are zero, the TMPDs for the second operand precede those for the first operand.

Phase LV

Phase LV provides string handling facilities for the pseudo-code phases.

It converts any type of data item to a CHARACTER or BIT string, and an assignment triple, with the target and source types used as the operands, is inserted in the text.

A string dope vector description is produced from a standard string description.

Phase LX (LW, LY)

Phase LX consists of three modules, LW, LX, and LY. Module LW acts as a pre-processor for LX and LY, moving constants into scratch storage prior to loading the string-handling modules.

Phase LX scans the source text to convert string triples to pseudo-code. If a result is produced it is added to a stack of intermediate string results.

For the comparison triples GT, GE, equals, NE, LE, AND LT, both operands are already string type. If one operand is zero, the operand is obtained from the associated TMPD triples. In-line pseudo-code is generated if the operands are aligned and are of known lengths less than or equal to 255 bytes; otherwise, library calling sequences are generated. The triple and any TMPD triples are removed from the text.

In the case of the string triples CAT, AND, OR, and NOT, the operands are converted to string type by phase LV. Zero operands are obtained from associated TMPD triples. In-line pseudo-code is generated when operands are aligned and are of known lengths less than or equal to 255 bytes. For the CAT operator, the first operand must be a multiple of 8 bits unless the strings involved are less than or equal to 32 bits in length. In-line code is also generated for the following cases involving non-adjustable varying strings:

1. Character string concatenation of varying strings with lengths less than 256 bytes.

2. Bit string operations for AND, OR, NOT, concatenation, and comparison where the strings are aligned and are less than 33 bits in length.

Otherwise, library calling sequences are generated. The triple and any TMPD triples are removed from the text, and the string result is added to the intermediate result stack.

For TMPD triples, if the intermediate result described by the TMPD triples is a string, a complete string description is moved from the top of the intermediate stack to the TMPD triples. If the TMPD triples do not describe a string, they are ignored.

In-line code is generated for the BOOL functions AND, OR, and EXCLUSIVE OR, when the third argument is a character or bit string constant and the first and second arguments are aligned and of known lengths less than or equal to 255 bytes. Otherwise library calling sequences are generated. Subscript and function triples may produce intermediate string results.

Phase MA

Phase MA generates pseudo-code for both the in-line invocations of TRANSLATE and VERIFY and for the invocations which call a library routine. It is optional depending on the presence of the TRANSLATE or VERIFY function in the source program.

Three kinds of tables are handled:

1. Compile-time created (up to three)

2. Floating, initialized by in-line code

3. Floating, initialized by library subroutine

When three constant tables have been created at compile-time, any further occurrence of this case, will cause the constants of both the second and third arguments to be handled via the library.

Blocks which have RECURSIVE, TASK, or REENTRANT attributes will have their own table, otherwise one table will be used for many blocks.

Phase MB

Phase MB scans the text for pseudo-variable markers and multiple assignment markers. A stack of pseudo-variable descriptions is maintained, together with the left hand side descriptions of multiple assignments when they occur. Pseudo-code and triples are generated for pseudo-variables and the left hand side descriptions of multiple assignments are put out in the correct sequence.

Phase MD

Phase MD uses the SCAN routine to scan the text for ADDR and STRING built-in functions for which it generates in-line code. It appears before the normal function processor phase and removes all trace of the in-line function. The general SCAN routine passes control when these functions are found.

For all cases of ADDR the generated code establishes the start address of the argument. If structure name arguments are present the structure chain is hashed for the first base-element. For array names the address of the first element is calculated.

If the argument to the STRING function is contiguous in main storage, and its length is known at compile-time, an adjustable string assignment is generated. Otherwise the library routines IHESTGA and IHESTGB are called to produce the concatenated length and to concatenate the elements of the array or structure argument.

Phase ME

Phase ME identifies all invocations of the SUBSTR function and pseudo-variable, all UNSPEC, STATUS, and COMPLETION functions, and those invocations of the INDEX function which can be implemented in-line; and generates pseudo-code to perform these functions at object time. The scan of the text is conducted by the general SCAN routine, and all trace of the invocations of these functions is removed before the normal function processor phase is loaded. When the end-of-program marker is encountered the terminating routine is entered.

Phase MG

Phase MG identifies functions which are to be coded in-line, and generates, in their place, the pseudo-code to perform the relevant function. This phase appears before the normal function processor phase and removes all trace of the in-line function.

The scan of the text is conducted by the general SCAN routine, and control is handed to the present phase when one of the following functions is found:

ALLOCATION	FLOOR	BINARY
BIT	IMAG	DECIMAL
CEIL	REAL	FIXED
CHAR	TRUNC	FLOAT
COMPLEX		PRECISION
CONJG		

Control is also passed to this phase if ABS is found with real arguments. The arguments are collected, and the appropriate routine is entered to generate the pseudo-code. When the end-of-program marker is encountered the terminating routines are entered.

Phase MI

Phase MI identifies functions which are to be coded in-line, and generates , in their place, pseudo-code to perform the relevant function. This phase appears before the normal function processor phase and removes all trace of the in-line function.

The scan of the text is conducted by the general SCAN routine and control is handed to the present phase when one of the following functions is found:

MAX	MOD
MIN	ROUND

If the number of arguments to the MAX or MIN functions is greater than three, a library call is generated.

Phase MK

Phase MK identifies functions which are to be coded in-line, and generates, in their place, pseudo-code to perform the relevant function. This phase appears before the normal function processor phase and removes all trace of the in-line function.

The scan of the text is conducted by the general SCAN routine, and control is passed to the present phase when one of the following functions is found:

DIM	HBOUND
LBOUND	SIGN
LENGTH	FREE

Phase ML

Phase ML scans the source text for generic entry name arguments to procedure invocations.

Such entry names may be floating arithmetic built-in functions or programmer-supplied procedures with the GENERIC attribute. When one is found, the correct generic family member to be passed is selected by this phase, depending on the entry description of the invoked procedure.

Phase MM

Phase MM scans through the source text for procedure invocations by a CALL statement, or for procedure or library routine invocations by a function reference.

Procedure invocations are replaced by an external standard calling sequence, and library routine invocations are replaced by an external or internal standard calling sequence as appropriate (see Appendix D.10).

If a CALL is accompanied by a TASK, EVENT, or PRIORITY option, library module IHETSA is loaded rather than IHESA, and the parameter list is modified to include the addresses of the TASK and EVENT variables and the relative PRIORITY.

Phase MP

Phase MP reorders the BUY and SELL statements involved in obtaining Variable Data Areas (VDAs) for adjustable length strings or temporaries, which were created by Phase GK. On entering this phase, the BUY triples precede the code compiled to evaluate the length of storage required for the VDA. This evaluation code is included between further BUYS and BUY triples, which themselves are between the BUY triple being considered and its associated SELL triple. Phase MP extracts these sections of code and places them before the BUY triple of the adjustable string temporary. Since such BUY triples may be nested, the phase maintains a count to record the nesting status.

Phase MS

Phase MS scans the source text for references to subscripted array elements.

If references are found, pseudo-code is generated to calculate the offset of the subscripted element in relation to the origin of the array. If necessary, further pseudo-code is generated to check the subscript range.

Optimization of constant subscript evaluation is carried out on arrays having subscripts which are integer constants, and for which the corresponding dope vector multipliers are constant. This applies to arrays with fixed-length elements.

Phase NA

Phase NA generates pseudo-code for the following triples:

For PROCEDURE' and BEGIN' triples a Library call is generated to the FREEDSA routine.

For RETURN triples a library call is generated, unless a value is to be returned as the result of a function invocation, in which case code is first generated to assign the result to the target field, and then the library call is made. If the function may return the result as more than one data type, a switch would have been set at the entry point to the function, and the RETURN statement would test the switch value, so that the data type appropriate to the entry point is returned.

GOTO triples either will be invalid branches detected by Phase FI, in which case they will be deleted, or they will be branches to statement label constants in the same PROCEDURE or BEGIN block. In this case, they will be compiled as one-instruction branches.

GOLN triples are compiled into one-instruction branches to the compiler label number in operand 2 of the triple.

A GOOB (Go Out Of Block) triple is a branch to a label variable, possibly subscripted, or to a label in a higher block than the current one (a branch to a lower block is invalid). A call is generated to a library epilogue routine, pointing at a double-word slot containing the address of the label and the Pseudo-Register Vector (PRV) offset (for a label constant), or the invocation count (for a label variable).

STOP and EXIT statements are implemented simply by invocation of the appropriate library routine.

For IF triples, if the second operand is an identifier, or the result of an expression which is not a comparison, code is generated to convert it to a BIT string, if necessary. This BIT string is compared to zero, either in-line, or by a call to the library.

The second operand may be a mask which will have been inserted by the expression evaluation phase as a result of the comparison specified in the IF statement. This mask is put into a generated instruction to branch if the condition is not satisfied, i.e., either to the ELSE clause or to the next statement.

For ON triples, code is generated to set flag bits and update the ON-unit address in the double-word ON slot in the DSA.

For SIGNAL arithmetic condition triples, in-line code is generated to simulate the condition. For all other conditions, a library error routine is called.

REVERT triples generate code to set flag bits in the double-word ON slot in the DSA.

Phase NG

Phase NG generates the calling sequences to the library for DELAY and DISPLAY and WAIT statements.

It generates code to call the library routines which handle ALLOCATE and FREE statements whose arguments are BASED variables.

For DELAY statements, the argument has to be a fixed binary integer, and, if necessary, code is generated for conversion.

For DISPLAY statements, the message must be a CHARACTER string, or, if necessary, converted to one. A parameter list is built up to pass to the library.

For WAIT statements, the parameter list is built up in workspace. It consists of the address of the scalar expression (converted to a fixed binary integer), followed by the addresses of the event-names that appear in each WAIT statement. If the scalar expression option does not appear, the address of the total number of event-names is used.

For the tasking option WAIT, whose argument is an EVENT array, the phase makes a 4-byte entry in the parameter list, containing the number of dimensions involved, and the address of the EVENT array dope vector. If the WAIT statement contains an EVENT array and no scalar expression, the first byte of the parameter list is set to X'FF'.

For ALLOCATE and FREE statements, with based variables as arguments, a parameter list is built in workspace before a call is made to one of the entry points to IHELSP. The parameter list is an 8-byte RDV followed by the address of the AREA variable from the IN option if present.

For ALLOCATE, the pointer-variable in the SET option is given the value returned by IHELSP.

Phase NJ

Phase NJ and its supporting block, NK, generate the calling sequences to the library module for the RECORD-oriented input/output statements: DELETE, LOCATE, READ, REWRITE, UNLOCK, and WRITE.

For each of these calls, the information contained in the options of the source statement is passed by a parameter list, constructed as follows:

```
DC  A(DCLCB)
DC  A(RDV|COUNT[1]|PNTR[2]|SDV[3])|0
DC  A(EVENT|LABEL[4])|0
DC  A(SDV.KEYTO|SDV.KEYFROM|SDV.KEY)|0
DC  A(REQUEST_CODES)
```

1 expr in IGNORE (expr)
2 pntr in READ SET (pntr)
3 SDV of varying string in READ INTO (varying string)
4 Compiler label as result of LOCATE

REQUEST_CODES is a full-word containing four control bytes with the following meanings:

Byte 0	Operation code	
	00	READ
	04	WRITE
	08	REWRITE
	0C	DELETE
	10	LOCATE
	14	UNLOCK
Byte 1	Group 1 options code	
	00	SET
	04	IGNORE
	08	INTO|FROM
Byte 2	Group 2 options code	
	04	KEYTO
	08	NOLOCK
Byte 3	Group 3 options code	
	04	VARY INTO
	08	VARY KEYTO
	0C	BOTH

Note that null arguments in the parameter list or REQUEST_CODES are indicated by zeros.

Both the parameter list and the REQUEST_CODES word are constructed in STATIC storage. However, if the argument of any of the options refers to AUTOMATIC, CONTROLLED, or BASED storage, the parameter list is moved to the workspace storage for the statement; the argument is then provided just before the library call is made.

In the case of the LOCATE statement, the phase is responsible for generating code to set the pointer variable with the pointer value returned in the first word of the RDV by the library. If the BASED variable was a structure with a REFER option in an extent definition, it is also responsible for generating code to initialize the extent variable named in the REFER option.

The DCLCB parameter is taken from the FILE option of the statement; the FILE option must be either a file constant or file parameter.

The record dope vector (RDV) is assumed to have been constructed by earlier phases, except in the case of CONTROLLED or BASED variables or CONTROLLED or BASED aggregates, when the procedure is as follows:

1. For CONTROLLED or BASED aggregates, Phase NJ creates a library call to IHESTRA, passing the following arguments through registers:

   Register 1 A(D.V)
   Register 2 A(DVD)
   Register 3 A(RESULT.RDV.SLOT)

2. For CONTROLLED or BASED strings, the phase generates code to construct the RDV in the workspace storage of the statement, using the dope vector of the string.

The IGNORE expression is taken from the IGNORE option of the statement and if necessary, converted to an integer.

The EVENT scalar is taken from the EVENT option of the statement.

The KEYTO SDV is derived from the KEYTO option of a READ statement.

The KEY SDV and KEYFROM SDV are derived from their respective options. If necessary, they are converted to character strings.

The PNTR is taken from the SET triple of the statement or from the BASED variable of the LOCATE triple if no SET triple appears.

Phase NM

Phase NM generates the calling sequences to the library modules for OPEN, CLOSE, GET, and PUT statements.

For OPEN and CLOSE statements, a parameter list is constructed from the options given. The options are first checked for validity with respect to multiple specifications. The arguments on the options are checked and converted, if necessary, to the correct data type. If no file is specified in an OPEN or CLOSE statement, it is ignored. The parameter lists are as follows:

```
OPEN  DC  A(DCLCB)
      DC  A(OCB)
      DC  A(TITLE.SDV)
      DC  A(IDENT.SDV)
      DC  A(IDENT.DED)
      DC  A(KEYLENGTH)
      DC  A(LINESIZE)
      DC  A(PAGESIZE)
CLOSE DC  A(DCLCB)
      DC  A(IDENT.SDV)
      DC  A(IDENT.DED)
```

Null arguments are indicated by zero address constants.

For GET and PUT statements, the library call is in three parts. The initialization, data transmission (Phase NU), and the termination. The initialization call requires a parameter list to be constructed from the given options. The options are checked for legal combinations and the arguments examined.

The parameter list when a file is specified is :

```
DC  A(DCLCB)
DC  A(next statement)
DC  A(binary integer) if SKIP or
    LINE is given.
```

For GET and PUT STRING, the argument to STRING is checked, and the parameter list formed is:

```
DC  A(SDV of string argument)
DC  A(DED of string argument)
```

The termination library call has no parameters. As for the initialization, the routine used depends on the options given in the statement.

Phase NT

This phase, which is a preprocessor for Phase NU, has two functions:

1. Initialization of a block of scratch storage for use by Phase NU
2. Setting up of INCLUDE matrix and library routine entries for edit-directed, STREAM-oriented I/O statements

The phase contains all pseudo-code skeletons used by Phase NU. 4096 bytes of scratch storage are obtained and the pseudo-code skeletons are copied into it. The address of the scratch area is then passed to Phase NU.

If a flag has been passed from Phase NM, indicating the presence of edit-directed I/O, a scan of the text is performed. Data and format list items encountered during the scan are associated as far as possible, and a sufficient set of library modules are identified for the edit-directed transmission specified in the program. The INCLUDE matrix is updated and dictionary entries are made for the required library format-director routines.

Phase NU

Data/format lists in I/O statements produce an internal library calling sequence (see Appendix D.10) for each data item and format item pair, using registers to point at the data item, the data item DED, and the FED for the format item.

Iterations of data items, as in array input or output, and of format items, are achieved by making DO loops out of the iterations.

The data items are transmitted serially, with program flow going from an item in the data list, to the corresponding format item and then to the relevant library I/O module. On return from the library module, control goes to the code for the next data item or, in the case of repeated data items, to another iteration of the DO loop.

Remote format statements are executed in a similar way. After the R format item is met, control is passed directly from the data list to the format statement until the end of the format statement. Control then returns to the item in the in-line format code of the EDIT statement following the appropriate remote format item. However, if no format elements remain but some data list elements are still present, control is passed back to the beginning of the format statement.

An R format item referring to a label which is not attached to a format statement will cause an object time error condition to be raised, and the execution to terminate.

Phase OB

Phase OB scans through the text for compiler functions and compiler pseudo-variables (see Appendix D.8). When a compiler function is found, pseudo-code is generated to access the operands of the compiler functions (e.g., string length, array bound), and to place the operand in the location specified by the TMPD following the function. Assignments to compiler pseudo-variables are treated in reverse; the result from the TMPD following the assignment is stored in the array bound or string dope vector slot specified in the compiler pseudo-variable.

Phase OB also scans the text for BUY, SELL, and BUY ASSIGN statements. The temporary operands of these statements are examined, and if they are CAD or short fixed-length strings, they are allocated the next available workspace offset, and the BUY and corresponding SELL statements are removed from the text.

Phase OD

This phase contains the translate and test table used by SCAN, and other tables and constants for phase OE. A block of scratch storage is obtained into which the tables, routines, and constants are moved. A pointer to the beginning of this area is passed to OE in a register.

Phase OE

Phase OE translates the following triples into pseudo-code:

Assignment

Multiple source assignment

Multiple target assignment

ALLOCATE, FREE, BUY, and SELL

Special assignment

In-line code is generated for the following types of ASSIGNMENT triples:

1. Floating-point to floating-point
2. Fixed binary to fixed binary
3. Fixed decimal to fixed decimal
4. Numeric field to numeric field, if the pictures given for the operands are identical
5. CHARACTER string to CHARACTER string, if the operands are fixed length and not more than 256 characters
6. BIT string to BIT string, if the operands are aligned and not more than 2040 bits
7. Label to label
8. File constant to file parameter
9. POINTER/OFFSET to POINTER/OFFSET
10. FIXED CHARACTER string to VARYING CHARACTER string and VARYING CHARACTER string to VARYING CHARACTER string provided that:
    1. The length of the source operand is not greater than 256 bytes
    2. The length of the target string is not greater than 256 bytes, if the maximum length of the source string is not known.
    3. For FIXED CHARACTER string to VARYING CHARACTER string the length of the FIXED string is not greater than 256 bytes.

Library calling sequences are compiled for those cases of CHARACTER string to CHARACTER string and BIT string to BIT string codes not compiled in-line.

After checking both AREA operands, AREA assignments are performed by the library.

All other assignment triples are translated into the CONV pseudo-code macro.

If the source operand is a constant, the type of the target operand is inserted in the constant dictionary entry, for processing by the constant conversion phase, and the assignment is translated assuming the target type.

MULTIPLE ASSIGNMENT triples produce the same code as for single assignment, except that the registers used by the operand concerned must not be changed or dropped.

Library calling sequences are generated for ALLOCATE, FREE, BUY, and SELL triples, and pseudo-code markers are left in the text for insertion of code by Phase QF.

With SPECIAL ASSIGNMENT triples, if the target is a varying or adjustable string, storage is obtained if the target is AUTOMATIC, or allocated if the target is

CONTROLLED. The assignment is then translated.

Phase OG (OL)

Phase OG converts to pseudo-code all statement numbers, statement labels, PROCEDURE, BEGIN, PROCEDURE', BEGIN', and end-of-program triples.

The CONVERT pseudo-code macro is examined in conjunction with the OPTIMIZATION parameter and pseudo-code is generated in one of three forms:

1. Code to call the library conversion package
2. Code to perform the conversion "in-line"
3. A modified CONV macro which is passed to phase OM or OP for processing. In-line conversion phases which are not required (OM and/or OP) are marked unwanted.

IGN pseudo-code items and JMP triples are removed. The amount of temporary working space required by each block of program is calculated and placed in the workspace dictionary entry (see Appendix C.7).

The format of the text is converted so that a pseudo-code item does not span blocks.

The INCLUDE card matrix is formed for all the conversion modules required.

Phase OM

Phase OM is called when either optimization levels 00 or 01 are specified. This phase scans the pseudo-code for the CNVC macros, which phase OG has placed into the text as 28-byte entries containing a transfer vector to select the appropriate conversion routine within OM, and replaces any such macros with in-line code.

The conversions inserted by phase OM are controlled by phase OG. When OPT=0, certain of the simpler FIXED DEC to PICTURE, PICTURE to FIXED DEC, and FIXED DEC to FIXED BIN conversions are passed to OM. When OPT=1, the remainder of the feasible FIXED DEC to or from PICTURE and FIXED DEC to FIXED BIN conversions are passed to OM together with FIXED DEC to CHAR conversions.

Certain FIXED DEC to PICTURE conversions, which phase OG cannot itself efficiently detect to be uneconomic when performed in-line, are recognized by phase OM, which inserts the calls to the appropriate library routines.

Phase OP

Phase OP generates in-line code to perform BINARY to BIT string, BIT string to BINARY, and FLOAT to FIXED BINARY conversions.

Phase OS

Phase OS scans through the constant chain in the dictionary and converts the constants to the required internal form. These are then stored in a constants pool, and the offset of each constant from the start of the pool is saved in the dictionary entry for that constant.

To permit the correct alignment of the constant pool, three scans are made of the constant chain; first to convert all double word constants, secondly to convert all single word constants, and thirdly to convert all unaligned constants.

In the first two scans only one pool entry is made for constants having the same internal form and value.

A fourth scan is made of the constant chain and all constants required to initialize static are converted, but instead of inserting these constants in the constant pool, they are moved into special dictionary entries constructed by Phase LB.

THE STORAGE ALLOCATION LOGICAL PHASE

The purpose of the Storage Allocation Phase is to ensure that every item requiring storage in a PL/I object program obtains a unique location of the correct size, located on the correct boundary. Items requiring storage include PL/I source program variables, dope vectors, dope vector skeletons, temporary variables, work areas, data descriptors, symbol tables, addressing slots, register save areas, flag areas, etc. Storage locations are allocated to items in order of descending alignment requirement to avoid wasting storage by padding to the required alignment.

The Storage Allocation Phase is also responsible for generating prologues. In generating the prologues, expressions which determine size of variables, code generated by the aggregates phase to initialize dope vectors, and code generated by the initial values phase, must be extracted and placed in the correct sequence in the text. Also, when a variable depends for its size or initial value upon another variable, the requests for dynamic storage must be arranged so that the dependant variable obtains its storage after the variables upon which it depends.

Since all AUTOMATIC and CONTROLLED storage is obtained dynamically at object time, the Storage Allocation Phase generates code to relocate dope vectors when the allocated storage address is known.

Phase PA

The purpose of phase PA is to determine the eligibility of the automatic chains of any block for STATIC DSAs. Any chain not so far found to be ineligible for a STATIC DSA is scanned to determine the DSA size. STATIC DSAs are generated for any chains of less than 512 bytes.

Dictionary entries are generated for STATIC DSAs. This phase also acts as a spill area for routines used in phases PD and PH.

Phase PD

Phase PD is the first STATIC storage allocation phase. It scans the text, and for every second file statement encountered sets up a pointer in the associated dictionary which points to the second file statement. It then sorts the STATIC chain so that the dictionary entries occur in the order in which the storage for their items will be allocated.

Storage is allocated for simple non-structured, non-external variables, RDVs, DEDs, SAVE/RESTORE entries, and the BCD of entry labels and label constants. Storage is also allocated for dope vectors for all items in the STATIC chain requiring them, with the exception of EXTERNAL items. A full word address slot is allocated in STATIC for each STATIC DSA.

The external section of the sorted STATIC chain is scanned and a 4-byte addressing slot is allocated for each entry label, label constant, external (entry type 4) entry, built-in function, or EXTERNAL item. For each EXTERNAL item the size of the external control section is calculated and stored in the dictionary entry.

The constants chain is scanned and the offsets of the storage and dope vectors for constants in the constants pool are relocated.

The current size of the STATIC INTERNAL control section is computed and the result is passed via the communications region to the next phase.

Phase PH

Phase PH is the second STATIC storage allocation phase. It scans the AUTOMATIC chain and CONTROLLED chain for all items requiring a dope vector.

For each such item a skeleton dope vector dictionary entry is generated in the STATIC chain (see Appendix C.7). This dictionary entry contains a bit pattern equal in length to that of the dope vector and containing all those values which are known at compilation time. In particular, it contains as much of the relative virtual origin as is known at compilation time, the constant bounds and string lengths, and the constant multipliers.

Skeleton dope vectors are not put into the STATIC chain for AUTOMATIC variables in any block whose DSA is in STATIC, except when the variable dimensions bit is set to one.

If the item is dynamically DEFINED, then the dope vector is preceded by one extra four-byte slot. (In the case of structures there is one extra slot for each element of the structure.) If the item is a dynamic temporary (temporary type 2) or a CONTROLLED scalar string, the virtual origin slot is relocated by the length of the dope vector.

In all cases the skeleton dope vector dictionary entry is pointed at by the dictionary entry of the associated item.

The sorted STATIC chain is scanned from the first skeleton argument list entry. For each such entry, space is allocated in the STATIC INTERNAL control section according to the assembled length of the argument list. The offset of each skeleton argument list is stored in the OFFSET1 slot of the dictionary entry.

RDV and DVD entries are found on this same scan of the STATIC chain. RDV entries are allocated eight bytes; DVD entries are allocated the specified length.

A scan is made of the section of the STATIC chain containing STATIC INTERNAL arrays. Storage is allocated for each array according to its size (computed by Phase JK) and the offset of the relative virtual origin is relocated to the start of the STATIC INTERNAL control section. If the array is of the VARYING type and it needs a dope vector, then storage is allocated for the secondary dope vector. The number of elements is calculated for INITIAL arrays and stored in the associated INITIAL dictionary entry.

The section of the STATIC chain containing STATIC INTERNAL structures is scanned. Storage is allocated for each structure according to the size of the structure (computed by Phase JK), and this storage is placed on the correct boundary on information supplied by Phase JK. The structure member chain for each structure is scanned and the relative offset of each member is relocated to the start of the STATIC INTERNAL control section. Further, on the structure member scan, secondary dope vectors are allocated when required, and the number of elements is calculated for INITIAL arrays.

Phase PL

Phase PL scans the STATIC, AUTOMATIC, CONTROLLED, structure, and PROCEDURE block chains for variables which require storage for their symbol tables and/or data element descriptors.

When a variable is found which requires a symbol table, the variable is joined onto the chain of symbol variables for the particular block. A symbol table dictionary entry is created for the variable (see Appendix C.7), and a chain is set up to and from the dictionary entry for the variable. The new dictionary entry is joined onto the STATIC chain.

The size of the symbol table is calculated, and its offset from the start of the STATIC control section is stored in the symbol table dictionary entry. Throughout the allocation of STATIC storage a location counter is maintained to contain the next free location in STATIC; this counter is increased appropriately.

All symbol variables require a DED and a branch is taken to the routine which allocates them.

When a variable is found which requires a DED, it is determined whether or not the DED describes a standard type; there are eight standard types, which consist of the different kinds of real coded arithmetic data that can be obtained by the combination of the attributes FIXED/FLOAT, BINARY/DECIMAL, LONG/SHORT (default precisions only).

If the DED is of a standard type, a check is made for an identical DED that may have already been encountered, so that there will be only one allocation of storage for any one type of standard DED. If the DED is not of a standard type, it is allocated storage of its own.

If the variable does not already have a symbol table dictionary entry (which contains space for DED information), a DED dictionary entry is constructed, and the offset of the DED in the STATIC control section is stored in it. A pointer in the new entry in the dictionary entry for the variable is also set up.

When all data element descriptors and symbol tables in the compilation have been processed, all STATIC storage has been allocated and the total size of the STATIC control section is placed in a slot in the communications region.

Phase PP (PO)

Phase PP extracts all ON condition entries and places them at the head of the AUTOMATIC chain. It then extracts all temporary variable dictionary entries from the AUTOMATIC chain and places them in the zone following the ON conditions in the chain.

All dictionary entries which are totally independent of any other variable are extracted, and also placed in the zone following the ON conditions.

The phase then extracts all dictionary entries which depend upon some other variable in containing blocks or in the zones already extracted, and places them in the next following zone. Dependency includes expressions for string lengths, expressions for array bounds, expressions for INITIAL iteration factors, and defined dependencies. This is repeated recursively until the end of the chain. If some variable depends upon itself, a warning message is issued.

A special zone delimiter dictionary entry is inserted between each zone in the AUTOMATIC chain (see Appendix C.7). A code

byte is initialized in the delimiter to indicate to Phases PT and QF whether its following zone contains any variables which require storage (i.e., it does not consist entirely of DEFINED items, which do not require storage), and whether or not the following zone contains any arrays of VARYING strings.

Phase PT

Phase PT allocates AUTOMATIC storage, scans the CONTROLLED chain, and determines the size of the largest dope vector. It scans the entry type 1 chain, and for each PROCEDURE block or BEGIN block it allocates storage for a DSA and compiles code to initialize the DSA.

A two-word slot in the DSA is allocated for each ON condition in the block, and code is compiled to initialize the slot. Space for the addressing vector and workspace in the DSA is also allocated.

Two words are allowed for tasking information in the DSA if the TASK option is on the external PROCEDURE of the compilation.

The AUTOMATIC chain is scanned and dope vectors are allocated for the items requiring them. Code is compiled to copy the skeleton dope vector, and to relocate the address in the dope vector.

Where there is a block with its DSA in STATIC, dope vector initialization is not performed for the variables in the first region of the AUTOMATIC chain. Address slots in dope vectors for variables in the remainder of the chain are relocated.

Storage is allocated for addressing temporaries type 2 and for addressing controlled variables, and for the parameters chained to the entry type 1.

The first region of the AUTOMATIC chain is scanned and storage allocated for double precision variables, single precision variables, halfword binary variables, CHARACTER strings, and BIT strings, in that order.

The first region of the AUTOMATIC chain is scanned and storage allocated for arrays, relocating the virtual origin. For arrays of strings with the VARYING attribute, the secondary dope vector is also allocated and code is compiled to initialize the secondary dope vector. Correctly aligned storage is allocated for structures. If a structure contains any arrays of strings with the VARYING attribute, the storage for the secondary dope vector is allocated at the end of the structure.

A pointer is set up in the AUTOMATIC chain delimiter to the second file statement which has been created.

The remaining regions of the AUTOMATIC chain are scanned and code is compiled to obtain a Variable Data Area (VDA) for each region. Code is compiled to copy the skeletons into the dope vectors and to relocate the addresses in the dope vectors. During this pass, any DEFINED items which are to be addressed directly have the storage offset and the storage class copied from the data item specified as the base identifier.

Phase QF

Phase QF, which constructs prologues, scans that text which is in pseudo-code form at this time with end-of-text block markers inserted.

When a statement label pseudo-code item is found, it is analyzed and one of three things happens:

1. The item is saved if it relates to a PROCEDURE statement
2. The item is omitted if it relates to a BEGIN or ON block
3. The item is passed if it relates to neither of the first two conditions

When a BEGIN statement is found, a standard prologue of simple form is generated, and code is inserted from second file statements (if there are any) to get the DSA, either dynamically, or in the case of eligible bottom-level blocks, by using the supplementary LWS made available at initialization time. Code is also inserted to initialize the DSA and to allocate and initialize any VDAs.

When a PROCEDURE statement is found, it is first determined whether it heads an ON block or a PROCEDURE block. If it is an ON block, a standard prologue (similar to that for a BEGIN block) is generated. If it is a PROCEDURE block, a specialized prologue is generated. This takes account of the manner of getting the DSA, the number of entry points, the number of entry labels on a given entry point, the number of parameters on each entry point, and whether the PROCEDURE is a function.

Prologue code is generated for AUTOMATIC scalar TASK, EVENT or AREA variables, in order to perform the initialization required when these variables are allocated.

The code generated by the prologue construction phase is partly in pseudo-code and partly in machine code. The machine code (which is delimited by special pseudo-code items) has the same form as the code produced by the Register Allocation Phase (see Appendix D.7).

DSA optimization is performed under certain conditions (see Appendix H).

At the end of the prologue, the statement label item saved earlier is inserted to mark the apparent entry point. Code is produced to effect linkage to BEGIN blocks in such a way that general register 15 contains the address of the entry point, and general register 14 contains the address of the byte beyond the BEGIN epilogue.

At the end of the text, any text blocks that are not needed are freed, and control is passed to the next phase.

Phase QJ

Phase QJ scans the text for ALLOCATE, FREE, and BUY statements.

On finding an ALLOCATE statement, a routine is called which does a 'look ahead' for initialization statements associated with the allocated variable, e.g., adjustable array bounds or adjustable string lengths, and places the text references of each statement in the dictionary entry associated with each statement.

If the allocated item has a dope vector, code is generated to move the skeleton dope vector generated by Phase PH into a block of workspace in the DSA of the current block.

Any adjustable bound expressions or string length expressions are then extracted from the text references, and the expressions are placed in-line in the text.

Any information required from previous allocations (specified by * in the ALLOCATE statement) is extracted from the previous allocation, and copied into the workspace.

Code generated by Phase JK to initialize multipliers, etc., is extracted and placed in-line, after first loading the variable storage accumulator with the dope vector size. Phase JK generates code to increment the accumulator register by the size of the item.

If the item has no adjustable parameters, code is generated to increment the accumulator by the size calculated at compilation time. If this size is greater than 4,096, Phase JK generates a constant dictionary entry, which is used in this code.

If the item has any arrays of varying strings, the size of the array string dope vector is added to a second accumulator register. Code is generated to add the two accumulators into the second one, which is a parameter to a library routine. A routine is then called which extracts the library call inserted by pseudo-code and places it in-line in the text.

Code is inserted after the library call to initialize the dope vector in workspace to point to the allocated storage. Code is generated to transfer the dope vector from the workspace to the allocated storage.

The code generated by phase JK to initialize arrays of varying strings, tasks, events, and areas is then inserted in the output stream.

Any initial value statements associated with the ALLOCATE statement are extracted and placed in-line. The initialization statements are then skipped, and the scan continues. The last two steps are also performed for LOCATE (based variable) and ALLOCATE (based variable) statements. Action for a BUY statement is similar to an ALLOCATE statement, with the following exceptions:

1. Bound and string length code is in-line, bracketed between BUYS and BUY statements - there is therefore no look ahead
2. There is no initial value code associated with temporaries
3. A slot in the DSA is updated with the pointer to the allocated storage for a temporary

The action on encountering a FREE statement is to generate code to load a parameter register with the pointer to the allocated storage for the FREE VDA Library call inserted by the pseudo-code.

Phase QU

Phase QU scans the pseudo-code text in search of instructions which have misaligned operands. (A misaligned operand has the UNALIGNED attribute and is not aligned on the boundary appropriate to its data type). When such an instruction is found, QU inserts a move character (MVC) instruction in the pseudo-code text to move the operand to or from an aligned workspace area, and substitutes the address of this workspace for the operand address in the original instruction. If the address of a misaligned operand is loaded into a register, a note is made of that register. QU thereafter treats the instructions which refer to it as if they referred to the operand itself, by inserting a move character instruction, and substituting the workspace address for the reference in the instruction.

In handling misaligned operands, phase QU uses storage beginning at offset 32 from register 9 for its workspace.

Whenever a load address (LA) instruction is found which lies within the calling sequence of a library routine and which loads the address of a misaligned argument of that routine, an aligned workspace address is substituted in the instruction, and the requisite move character instruction is stacked. It is not inserted in the output text until the instruction is encountered that loads register 15 prior to the exit to the library routine, or in the case of EDIT-directed I/O routines, until the appropriate branch-and-link (BALR) instruction is encountered. The stacked move character instruction is inserted into the output before the exit to the routine if the argument in question is an input argument to the routine, and after the return from the routine if it is an output argument.

Whenever a fixed binary temporary of precision < 16 is encountered in the text, the dictionary is checked to see if this is a member of an argument list (phase GP will have set bit). If it is, the instructions referring to it are altered to halfword. The displacement in any Load Address referring to the temporary is incremented by 2.

References to halfword binary items are replaced by halfword instructions where PL/I permits. Where possible and desirable, fullword instructions are used to perform calculations, and only LH/STH instructions used to access storage.

Fullword conversion is inserted into the library calls marked by phases LS and NG.

In handling halfword binary items, phase QU uses 4 bytes, beginning at offset 0 from register 9, for workspace.

Phase QX

Phase QX is the 'AGGREGATE LENGTH TABLE' printing phase. It is entered only if the ATR (attribute list) or XREF (cross reference list) options are specified. It scans the STATIC, AUTOMATIC, CONTROLLED and COBOL chains, and, for each major structure or non-structured array that is found, an entry is printed in the AGGREGATE length table.

An AGGREGATE LENGTH TABLE entry consists of the source program DECLARE statement number, the identifier and the length (in bytes) of the aggregate. In the case of a CONTROLLED non-BASED aggregate no entry is printed for the DECLARE statement, but an entry is printed for each ALLOCATE for the aggregate, the source program ALLOCATE statement number being printed in the 'statement number' column.

Where the length of an aggregate is not known at compilation the word "ADJUSTABLE" is printed in the 'length in bytes' column of the entry for that aggregate. If an aggregate is dynamically defined, the word "DEFINED" appears in that column. An entry for a COBOL mapped structure (i.e., a structure which a COBOL record is read into or written from), has the word "(COBOL)" appended, but such an entry will appear only if the structure does not consist entirely of one of the following:

- doubleword data
- fullword data
- halfword binary data
- character string data
- aligned bit string data
- a mixture of character string and aligned bit string data

If a COBOL entry does appear, it is additional to the entry for the PL/I mapped version of the structure.

Before printing begins the aggregate length table entries are sorted so that the identifiers appear in collating sequence order.

THE REGISTER ALLOCATION LOGICAL PHASE

The purpose of the Register Allocation Phase is to insert into the text the appropriate addressing mechanisms for all types of storage, and to allocate physical general registers where symbolic registers are specified or required as base registers.

This phase comprises two physical phases, each with a specific function. The first, Phase RA, processes the addressing mechanisms, while the second phase, Phase RF, allocates the physical registers.

An additional phase RD is called in between RA and RF when the optimization option is 2 or greater. This phase attempts to optimize the storing and loading of registers in use over compiler generated branches.

Phase RA (RB,RC)

Phase RA scans the text for dictionary references, the beginnings and ends of PROCEDURE and BEGIN blocks, and the starting points of the original PL/I statements.

A dictionary reference, when found, is decoded into a word-aligned dictionary address and a code. These are used to determine what is being referenced. The corresponding object time address as an offset and base is then calculated.

If the address required has an offset less than 4,096 and a base which is either an AUTOMATIC or STATIC data pointer, no extra instructions are generated. If this is not so, extra instructions are inserted in the text stream to calculate the required address. The calculation of this address is broken down into logical steps in a 'step table.' On completion, the table is scanned backwards to determine whether an intermediate result has been previously calculated. The steps which have not been previously calculated are then assembled into the pseudo-code.

The compiled code is added either to the output stream or to a separate file. The code in the separate file is terminated by a store instruction to save the calculated address. The extra "insertion file" is placed in the prologue of the relevant block by the next phase. Instructions are stored in-line if the referenced item is CONTROLLED, if it is a parameter, if fewer instructions are required to recalculate the base rather than load the stored address, or if the reference itself is in the prologue.

If no addressing code is generated, a special item is put in text to tell phase RF what base to use.

All relevant information for PROCEDURE and BEGIN blocks is stacked and unstacked at the start and end of the blocks respectively.

At the start of PL/I statements, code is compiled to keep the required PREFIX ON slots in the Dynamic Storage Area updated. On meeting the pseudo-code error marker, the calling sequence to the library error package is generated, and the error marker removed.

If the STMT option has been specified, code is generated at the start of each PL/I statement to keep the statement number slot in the current DSA up to date.

Phase RD

Phase RD examines all EQUs and determines their uses. A table is set up in scratch text blocks containing a four-byte slot for each EQU. The number of text blocks required is calculated from the value in the ZMAXEQ field in the communications region. The first text block, containing the slots for the first N-4 EQU values (where N = text block size), is locked into main storage so that these slots can be accessed by direct addressing.

The other slots are accessed via their text references, and their text blocks are brought into storage as needed, by the compiler control routines. A dictionary of text block numbers for each range of EQU values is kept in the phase. This allows for a maximum of 64 text blocks, i.e., under the smallest SIZE parameter a maximum of 16K EQU values are allowed.

The table is built up during a pass of the program text. At the end of the text pass the table is scanned. Any EQU which is not used is deleted. Any EQU which is either before the first use or used more than once is flagged by setting the first bit of the EQU value on. During this scan of the table, the current table text block is locked into storage and released when the scan is completed for the block.

Phase RF (RG,RH)

Phase RF scans the text for register occurrences, implicit and explicit, and the start and end of PROCEDURE and BEGIN blocks. At the beginning of PROCEDURE and BEGIN blocks all relevant information is stacked, and is later unstacked at the corresponding end.

Registers are classified as assigned, symbolic, or base.

Assigned registers require the explicitly mentioned register to be used. If that register is not free it is stored. Symbolic registers may occupy any register in the range 1 through 8. An even-odd pair may be requested. Base registers may occupy any of registers 1 through 8.

When a register is requested, a table of the contents of registers is scanned, to determine whether the register already has the required value. If it does, that is used. If it does not, and it is not an assigned register, a search is made for a free register and this is allocated if one is found. Should no register be free, a look-ahead is performed to determine which register it is most profitable to free.

If a register contains a base it need not be stored on freeing. If a register contains a symbolic or assigned register, it may require to be stored when freed, depending upon whether it has had its value altered since any storage associated with it was last referenced.

At a BALR (Branch and Link) instruction it is ensured that all the necessary parameter registers are in physical registers, and not in storage.

No flow trace is carried out by the compiler. Therefore, the register status is made zero at branch-in and branch-out points. An exception is at a conditional branch. Here the registers are not freed after having been saved.

Any coded addressing instructions are expanded when found in-line. At a specific "insertion point" in a prologue, any addressing instructions in the "insertion file" are brought in and expanded.

THE FINAL ASSEMBLY LOGICAL PHASE

The Final Assembly Phase converts the pseudo-code output of the register allocation phase into machine code, the principal functions being the substitution of machine operation codes for pseudo-code operations, and the replacement of PL/I and compiler inserted symbolic labels by offset values.

Loader text is generated for program instructions, DECLARE control blocks, and OPEN file control blocks, initial values defined in the source program, parameter lists, skeleton dope vectors, symbol tables, etc. ESD and RLD cards are generated for external names and pseudo-registers. An object listing of the code generated by the compiler is produced if the option has been specified by the source programmer.

Phase TF

Phase TF scans the text, assigns offsets to compiler and statement labels, and determines the code required for instructions which reference labels.

The size of each procedure is determined and stored in the PROCEDURE entry type 1. A location counter of machine instructions is also maintained.

Phase TJ

Phase TJ scans the text until no further optimization can be achieved in the final assembly.

A location counter is maintained for assembled code, and offsets are assigned to labels.

The size of each procedure is determined and stored in the PROCEDURE entry type 1. The amount of code required for instructions to reference labels is also determined, while attempting to reduce this from the amount estimated by the first assembly pass.

This phase also attempts to reduce the number of Move (MVC) instructions by searching for consecutive MVC instructions which refer to contiguous locations.

Phase TO (TQ)

Phase TO sets the four byte slot ZPRNAM, in the communication region, to contain the first four characters of the first entry label of the external procedure, for the purpose of object deck serialization.

Phase TO also produces ESD cards for the compiled program. It first makes up six standard entries for:

1. Program Control Section (CSECT) (SD type) allowing room for the compiler subroutines if these are present.

2. STATIC internal CSECT (SD type)

3. Invocation count (PR type)

4. Entry points to library routines, IHESADA and IHESADB (ER type)

5. IHEQERR (PR)

6. IHEQTIC (PR)

If the external procedure has the MAIN option, an entry for a one-word CSECT (SD type) is made up. An entry is made for the CSECT 1H entry and entries are made up for all entry labels in the external procedure (LD type).

The entry type 1 chain is scanned and an entry (PR type) is made up for each block and procedure.

The external section of the STATIC chain is scanned and entries are made up for:

1. Built-in functions and library functions (ER type)

2. Files (ER type)

3. STATIC external variables (SD type)

4. External entry names (ER type)

5. Programmer ON condition names (SD type)

The CONTROLLED chain is scanned and an entry is made up for each CONTROLLED variable and task name (PR type).

The size of the program control section is incremented to include the compiler subroutines.

All STATIC DSAs are put into the STATIC INTERNAL control section, their combined sizes being allowed for when the size of the CSECT is calculated.

Module TQ is used to produce a list of library conversion routines required for execution of the program. ER type entries are made up for each name in the list.

Phase TT

Phase TT scans the text and maintains a location counter for assembled code.

Loader text (TXT) and relocation directory (RLD) cards for requested combinations of load and punch files are generated.

Nested procedures are unnested at object time by suitable manipulation of the location counter. The offset of each procedure from the start of text is left in the PROCEDURE entry type 1.

Compiler labels are numbered for use by the object listing phase, and trace information is set up at entry points. Phase TT also generates the text for the compiler subroutines. These subroutines are put out in one of the following combinations:

1. EPILOGUE subroutine
   DYNAMIC PROLOGUE subroutine
   STATIC PROLOGUE subroutine

2. EPILOGUE subroutine
   DYNAMIC PROLOGUE subroutine

3. EPILOGUE subroutine
   STATIC PROLOGUE subroutine

Phase UA

Phase UA generates text for the static internal CSECT; initializes a CSECT for each static external variable; and, optionally (if the LIST option is present), lists all the text produced for the static internal CSECT and provides suitable comments.

The phase first scans to the start of the external section of the STATIC chain, generating text for entry labels, label constants, compiler labels, file attributes, label variable BCDs, and DEDs for temporaries. Simple variables found on this scan are used, together with the labels, to mark the start of the character string section of the chain.

The phase then scans to the end of the external section of the chain, initializing address constants for external variables, external entry names, built-in and library functions, programmer-defined ON-condition names, external files, and label constants. Text is made up for the constants pool.

The third scan of the STATIC chain starts at the point left by the previous

scan, and generates text for dope vector skeletons, argument lists, RDVs and DVDs, and symbol tables. The scan is terminated at the end of the chain.

Phase UA makes up RLD cards for the address slots for STATIC DSA's and for the address slot of the start of the epilogue subroutine, if generated.

Text cards are output to initialize all AREA's, EVENT's, and TASK's. Arrays of AREA's, will have a text card for each element.

Phase UD

Phase UD generates RLD and TXT cards to set up dope vectors at link-edit and load time.

TXT cards are generated for each STATIC DSA, containing its length, which is found in the STATIC DSA entry.

TXT and RLD cards are generated to set up the dope vectors for structured items and any non-structured items appearing in the AUTOMATIC chains. The TXT cards are derived from the skeleton dope vector entries. The RLD cards are generated for each virtual origin slot.

When the last STATIC DSA has been processed control is released from phase UD.

Phase UE

Phase UE initializes those items on the STATIC chain not processed by Phase UA.

The phase first scans to the start of the external section of the chain, making up text for simple data, and listing label variables.

The second scan starts at the head of the character string section of the chain, and initializes dope vectors for all static internal variables which need them.

The third scan corresponds in extent to the third scan in Phase UA, but generates text for arrays, and simple and interleaved structures. At the end of this scan, a test is made to determine whether the external procedure of the program has the MAIN option. If so, a one-word CSECT (IHEMAIN) is made up, to contain the address of the principal entry point to the compilation.

The phase then executes its final scan, which extends over the external section of the chain, to initialize a CSECT for each external variable or external file.

Finally, any incomplete text and RLD cards are punched out, and an END card is produced for the compiled program. If the OBJNM parameter is present for batch compilation, phase UD punches a NAME card to follow the END card.

Phase UF (UH)

Phase UF scans the text, and lists, in assembly language format, machine instructions compiled for the source program. It inserts comments in the listing for statement numbers, statement labels, entry points, prologues, and procedure bases.

Phase UF contains module UH which generates NAME from a dictionary reference. UF also lists the text for the compiler subroutine. This is done by releasing UH and loading module UI which performs this function. Upon termination of this phase module UI passes control to phase XA.

THE ERROR EDITOR LOGICAL PHASE

The Error Editor Phase is entered at the end of all compilations. The first phase, Phase XA, examines the dictionary and determines whether there are any messages to be printed out. If there are none, this phase terminates the compilation. If there are diagnostic messages to be printed out, phase XB is loaded and the third section of the phase directory is completed. Phase XC is then loaded and this together with phase XA causes further modules (XF, and blocks XG to YY) to be loaded, which process the error dictionary entries and print out the appropriate messages.

Phase XA

Phase XA examines the heads of the error chains in the first dictionary block, and the programmer options which specify the severity level of messages required. If there are no diagnostic messages to be printed, this phase prints out a completion message and completes the compilation. If diagnostic messages are required, the phase loads module XB which completes the phase directory for Compiler Control. Phase XB

is then released and phase XC and the message address block XF are loaded.

The error editor then scans down the error message chains and marks each error dictionary entry with an indication of where the associated message is to be found. This information is obtained from a table in module XF.

The text of all error messages is kept in modules XG through YY. The messages are ordered, by severity, within these modules. Module XA will have listed those modules which contain messages required for a particular compilation. Module XC loads and releases these modules, one at a time, and extracts the required messages. Having loaded a particular module, the phase scans down the associated error message chain in the dictionary for error entries associated with the module. It accesses the error message text and scans it.

The message to be printed is built up in a print buffer in internal compiler code. This involves a translation from EBCDIC mode, which is used for the message text skeleton. The message is completed by the insertion of a statement number, an identifier, or a numeric value as specified by the message dictionary entry. The message is segmented, where necessary, to avoid spilling over a print line, translated to external code, and finally printed out.

When all error message dictionary entries have been processed, module XB returns control to phase XA, which passes control to module AA for termination of the compilation.

Note: For descriptions of terms and abbreviations used in the text during a compilation which are mentioned in this chapter, refer to Appendix D.11.

This chapter provides a complete guide to the compiler logic, in the form of flowcharts and associated tables and routine directories, arranged in phase order.

Flowcharts

The flowcharts are presented at three levels of detail -- overall, logical phase, and physical phase. The overall compiler flowchart (Chart 00) points to the logical phase flowcharts (Charts 01 through 11), each of which appears at the head of the set of physical phase flowcharts to which it points. The physical phase flowcharts point (by means of identifiers placed next to the blocks) to the various routines used. Entry points to physical phases are labeled.

Where transfer is effected between modules within a physical phase, the entry label into the entered module is shown as follows:

1. Where the means of transfer is a transfer vector, an asterisk is shown as the label on the flowchart, and a note at the foot of the chart states that the transfer vector table is located at the start of the module.

2. When transfer is made from a decision block, the block representing the entry is labeled.

With the exception of "fall-through" branches, all branches from decision blocks are labeled where possible. Where the branch is actually a branch table, this fact is indicated on the chart, and the label of the branch table is given.

In some cases, additional labels have been given, to assist in following the program flow.

Tables and Routine Directories

For each physical phase, a table is provided, which lists the operations performed and identifies the routines and subroutines involved. Where applicable, a routine directory follows the table. This provides an alphanumerically arranged list of the routines and subroutines contained in the phase, and states their function.

In some cases, a physical phase comprises more than one module; this means that routines contained in different modules may be listed together in one routine directory. To assist in cross-reference to the compiler listings, the following convention has been adopted: if a routine is contained in a module whose label is not identical to that of the phase under discussion, the label of the containing module is inserted in parentheses after the routine name in the directory.

In the case of a phase sharing a routine contained in another phase, the label of the containing module is indicated in parentheses after the routine name in the "Subroutines Used" column. The routine will not then appear in the routine directory for the phase under discussion, but will be found in the routine directory for the containing phase.

Chart and Table Identification

Identification of tables and physical phase flowcharts is based on the phase label.

• Chart 00. Overall Compiler Flowchart

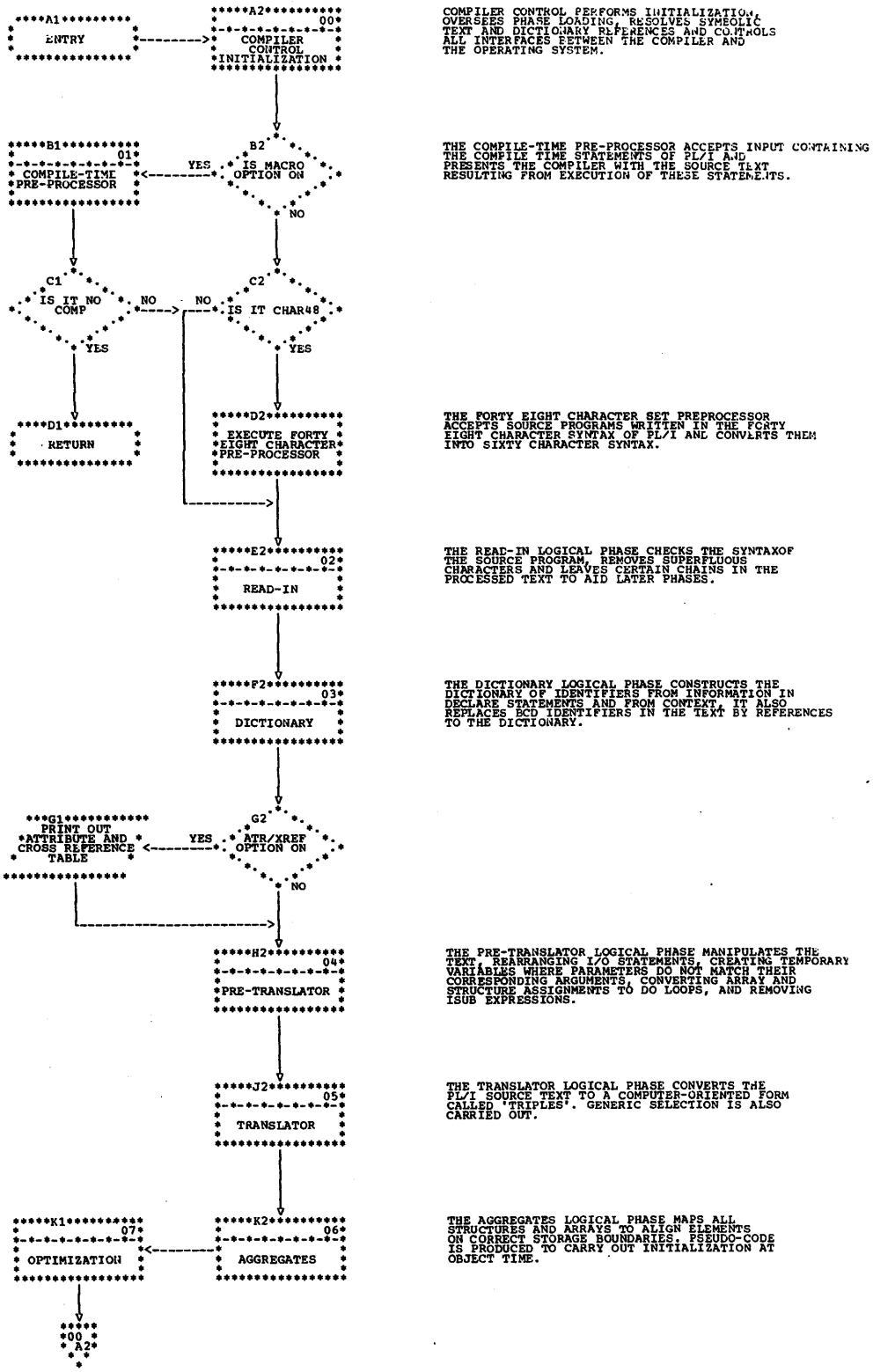

Chart 00. Overall Compiler Flowchart (cont'd)

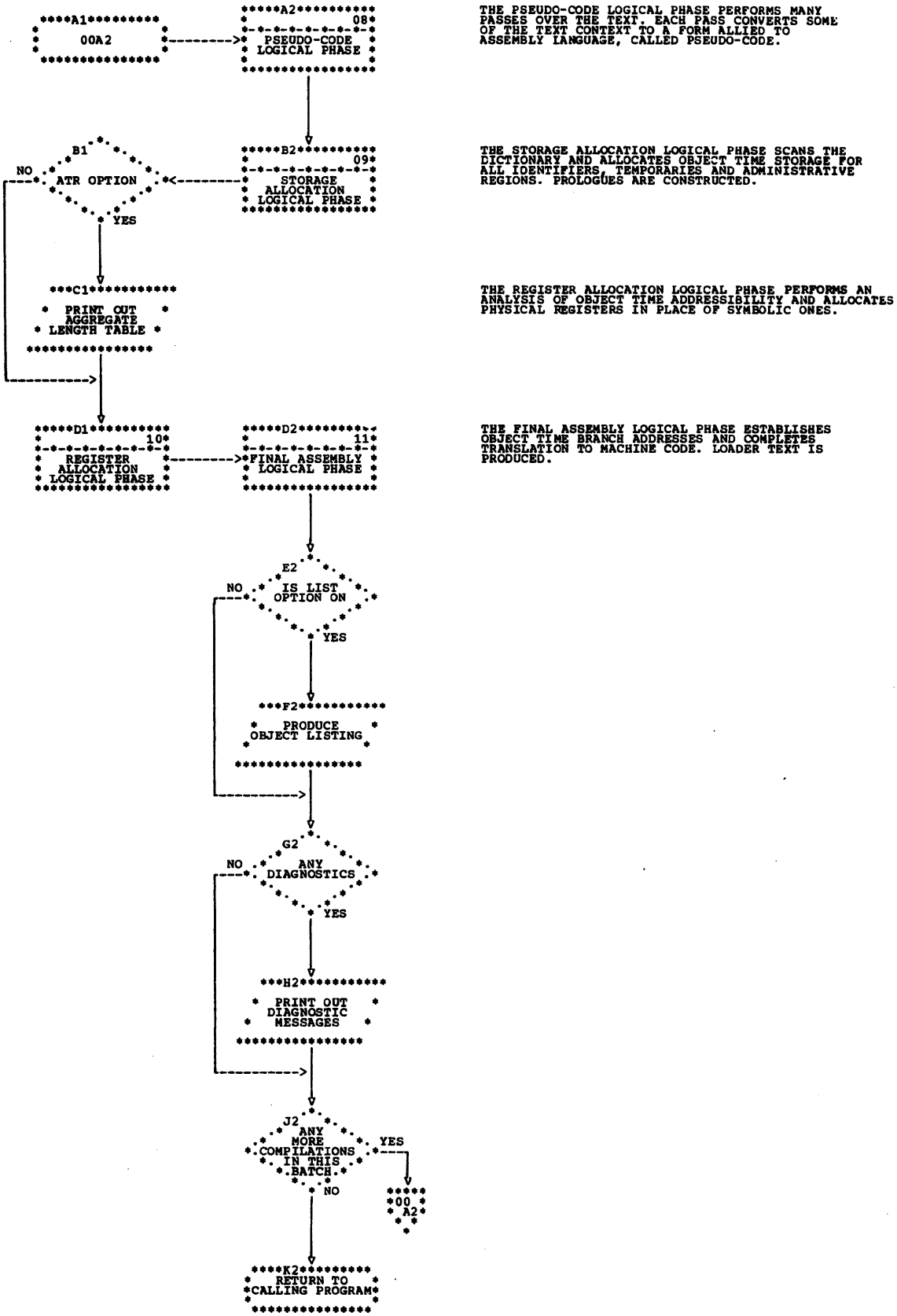

● Chart AA. Resident Control Phase Logic Diagram (Modules AA through AM, and JZ)

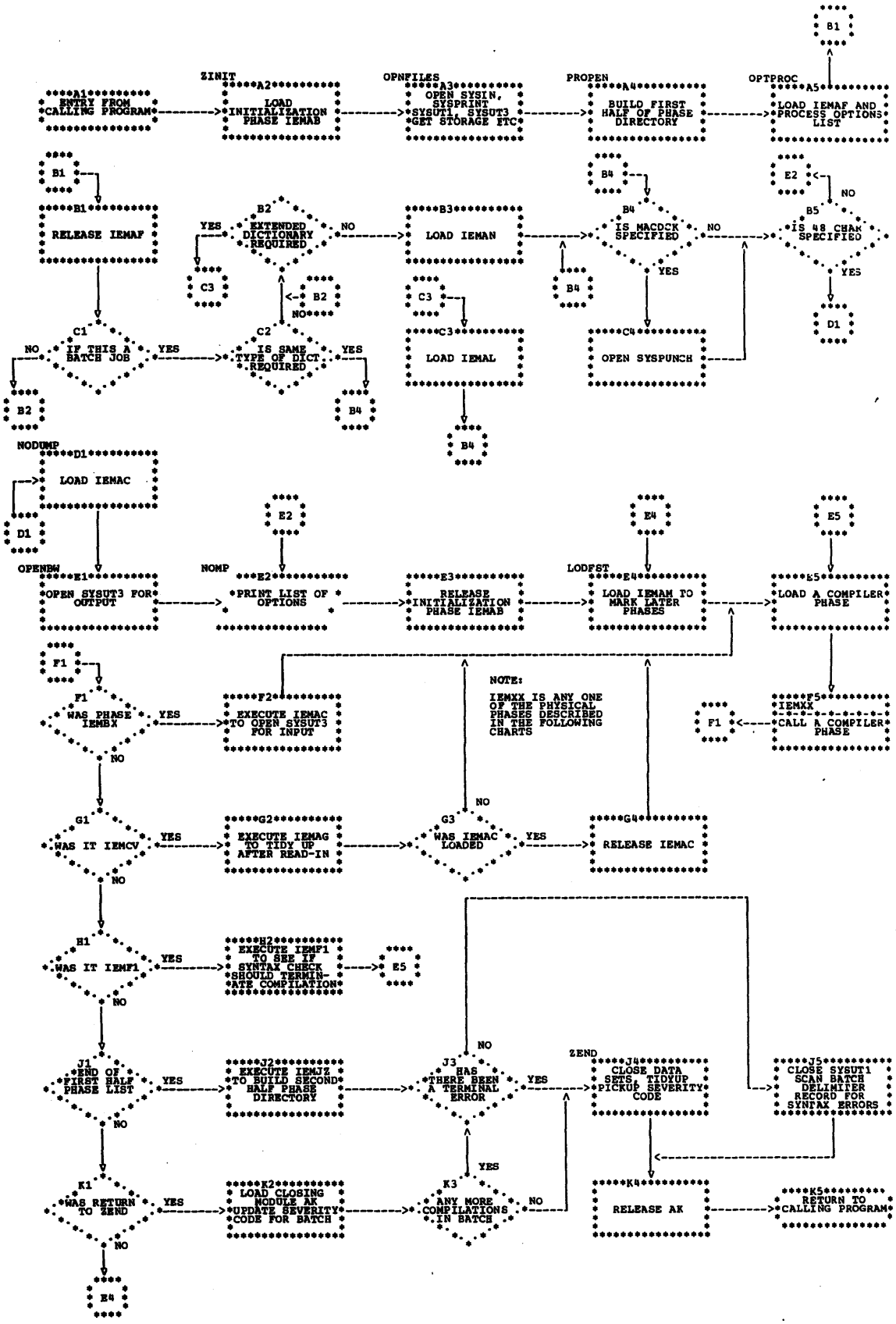

•Chart AT. Phase AT Overall Logic Diagram

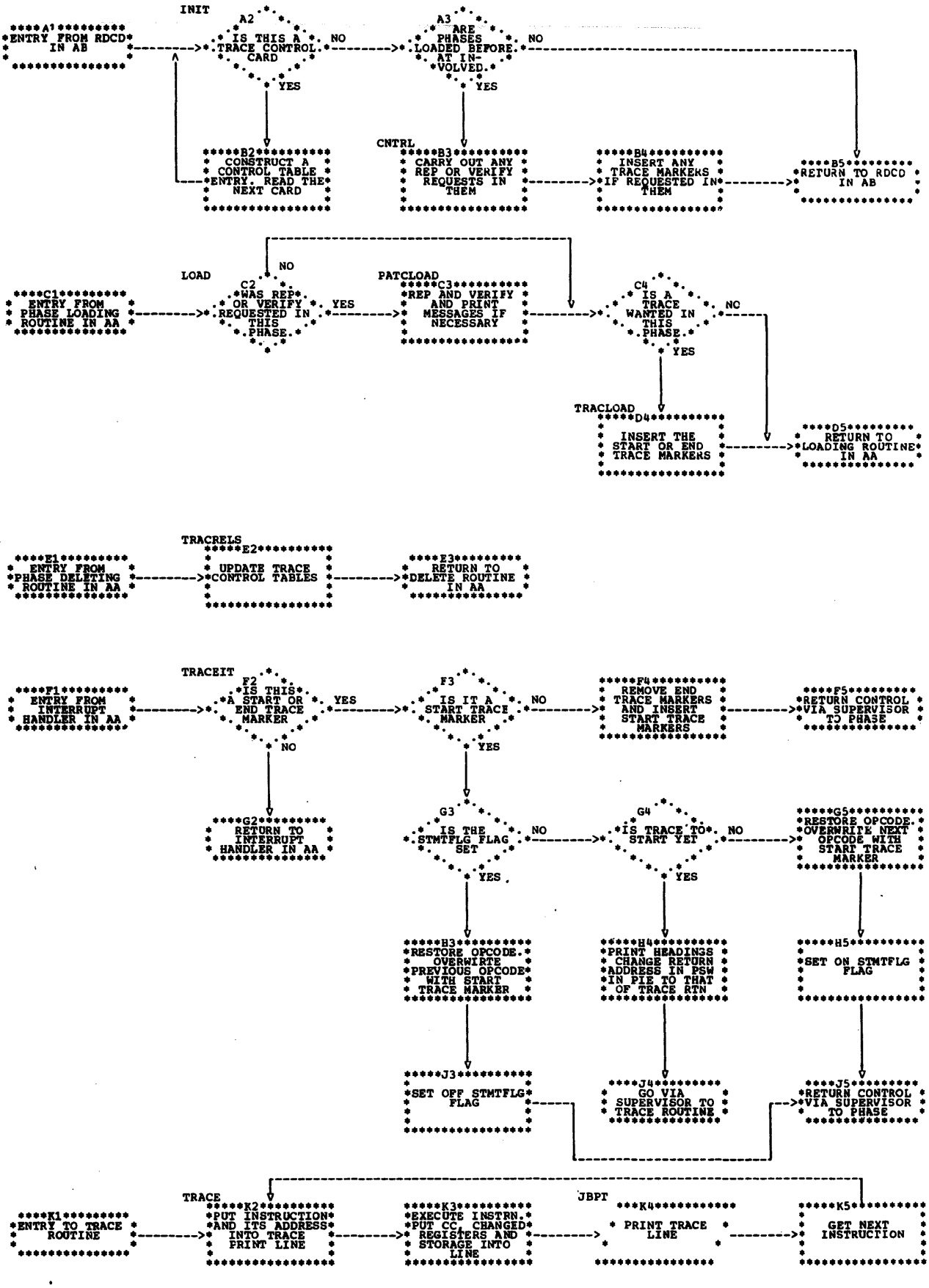

EXIT FROM THE ABOVE LOOP WILL OCCUR WHEN A PRIVILEGED OPERATION INTERRUPT OCCURS ON ENCOUNTERING AN END TRACE MARKER IN THE CODE BEING TRACED.

Table AA. Module AA Compiler Control Resident Control Phase

Statement or Operation Type	Main Processing Routine	Routine Called
Initializes the compiler Parameters passed: General register 1 points at the passed parameters Entry to the operating system: GETMAIN(R), TIME, LINK, SPIE	ZINIT	LOADW, ABORT
Deletes a list of loaded phases Parameters passed: PAR1 -- address of list of phases to be deleted Entry to the operating system: DELETE	RELESE	ZUERR, ABORT
Deletes a list of loaded phases and passes control to either the next requested phase or the next named phase Parameters passed: PAR1 -- address of list of phases to be deleted; PAR2 -- address of name of phase to which control is to be given, or zero Parameters returned: PAR1 -- load point of new phase Entry to the operating system: DELETE, LOAD(EPLOC), LOAD(DE), LINK	RLSCTL	Module AD if inter-phase dumping is required; Module AE if it is end of Read-In Phase; ZUERR, ABORT
Loads the required phase and returns control to the caller. The phase may be loaded again Parameters passed: PAR1 -- address of name of phase to be loaded Parameters returned: PAR1 -- load point of phase Entry to the operating system: LOAD(DE)	LOADX	ZUERR, ABORT
Marks phases as 'wanted' and 'not wanted' Parameters passed: PAR1 -- address of list of phase names to be marked 'wanted;' PAR2 -- address of list of phase names to be marked 'not wanted' Entry to the operating system: None	REQEST	ZUERR, ABORT
Puts a record out to SYSLIN Parameters passed: PAR1 -- address of output record Entry to the operating system: PUT LOCATE(QSAM)	ZULF	LFERRX
Puts a record out to SYSPUNCH Parameters passed: PAR1 -- address of output record Entry to the operating system: PUT LOCATE(QSAM)	ZUSP	SPERRX

Table AA. Module AA Compiler Control Resident Control Phase (cont'd)

Statement or Operation Type	Main Processing Routine	Routine Called
Deletes currently loaded phases and passes control to the Error Editor Entry to the operating system: LOAD(EPLOC) if dump option specified	ZABORT, ABORT	Module AD if dump option specified; RLSCTL
Picks up completion code and returns control to the program that called compiler Entry to the operating system: TIME, FREEMAIN, DELETE	ZEND	ZUPL
Handles all program checks Parameters passed: ARINT holds address of routine wanting to handle interrupt. ARMASK holds mask indicating which interrupts it is desired to handle Entry to the operating system: None	PIH	ZUERR

Table AA1. Module AA Routine/Subroutine Directory

Routine/Subroutine	Function
ABORT	Deletes currently loaded phases, passes control to error editor.
BLKERR	Enters message "REFERENCED BLOCK NOT IN USE", then terminates compilation.
CONSLD	Takes dictionary reference and points at relevant slot in dictionary control block area (DSLOTS).
CONSLT	Takes text reference and points at relevant slot in text block control area (TSLOTS).
DFREE	Finds dictionary block which can be written on disk to make room for a new block in storage.
LFERRX	Marks error on SYSLIN data set.
LOADX	Loads required phase and returns control to caller. The phase may be loaded again.
LOADW	Loads required phase and returns control to caller.
PIE	Handles all program checks.
PLERRX	Prints record on SYSPRINT data set. Pagination (paging action) is performed automatically.
RDERRX	Marks error on SYSIN data set.
READX	Reads a block from disk.
RELESE	Releases all loaded phases.
REQEST	Marks phases as 'wanted' or 'not wanted.'
RLSCTL	Releases all loaded phases and passes control to next required or named phase.

Table AA1. Module AA Routine/Subroutine Directory (cont'd)

Routine/Subroutine	Function
SPERRX	Marks error on SYSPUNCH data set.
ZABORT	Deletes currently loaded phases and passes control to error editor.
ZEND	Picks up the completion code for the compilation and returns control to ZINT to continue the batch, or to the operating system at the end of a single or batch compilation.
ZINIT	Initializes the compiler.
ZULF	Puts record out to SYSLIN data set.
ZUSP	Puts record on to SYSPUNCH data set.

Table AB. Module AB Compiler Control Initialization

Statement or Operation Type	Main Processing Routine	Routine Called
Issues a BLDL macro instruction on all phases in compiler, and constructs a compacted phase dictionary Entry to the operating system: BLDL	PROPEN	None
Prints initial heading and performs scan of option list. Default options are taken where necessary Parameters passed: General register 1 points to option list passed at invocation time Entry to the operating system: TIME, PUT LOCATE(QSAM)	OPTPROC	None
Makes the initial space allocation for text and dictionary blocks. Sets up communication region Entry to the operating system: GETMAIN(R)	OPENR	None
Opens spill file if text and dictionary blocks are 1K Entry to the operating system: OPEN	OPENSP	None
Obtains the guaranteed 4K of scratch storage Entry to the operating system: GETMAIN(R)	GETSCR	None
Loads intermediate file writer (Module AC). Sets buffer sizes for SYSUT3 and opens the data set Entry to the operating system: LOAD(EPLOC), OPEN	NODUMP	ZUPL (AA)
Prints out list of options for this compilation Entry to the operating system: None	NDMP	ZUPL (AA)
Enters error messages generated when SYSIN, SYSPRINT opened Entry to the operating system: None	PJ13	ZUERR (AA)
Reads first card and stores. Uses as heading if required	RDCD	ZURD, ZUERR, ZUPL (all in AA)
Return to pre-initializer in IEMAA	ABOUT	None
Opens SYSPUNCH if MACDCK specified Entry to the operating system: OPEN	MCD	ZUERR
Loads dictionary handling control routines (phase IEMAN or IEMAL depending on normal dictionary or extended dictionary being specified in the options) Entry to the operating system: LOAD	LODCNTL	None

Table AB1. Module AB Routine/Subroutine Directory

Routine/Subroutine	Function
ABOUT	Returns control to pre-initializer in Module AA.
GETSCR	Obtains scratch storage.
NDMP	Prints lists of options for current compilation.
NODUMP	Loads intermediate file writer module AC. Sets buffer sizes for SYSUT3 and opens data set.
OPENR	Makes initial space allocation for text and dictionary blocks. Sets up communications region.
OPENSP	Opens spill file.
OPTPROC	Prints initial heading and performs scan of option list.
PJ13	Enters diagnostic messages generated when SYSIN and SYSPRINT data sets are opened.
PROPEN	Issues BLDL macro instruction and constructs phase directory.
RDCD	Reads first card.

Table AC. Module AC Compiler Control Intermediate File Control

Statement or Operation Type	Main Processing Routine	Routine Called
Writes a record onto SYSUT3 Parameters passed: PAR1 -- address of output record; PAR2 -- length of record Entry to the operating system: PUT LOCATE(QSAM)	IEMAC	None
Link to file switching routine (Module AG) Entry to the operating system: LINK	ENDED	None

Table AD. Module AD Compiler Control Interphase Dumping

Statement or Operation Type	Main Processing Routine	Routine Used
Debugging aids. This routine contains a dumping program which is invoked by use of the DUMP option	IEMAD	ZDRFAB, ZTXTAB, ZUPL (all in AA), DUMP

Table AD1. Module AD Routine/Subroutine Directory

Routine/Subroutine	Function
DUMP	Converts contents of specified area of main storage to hexadecimal, prints the result.

Table AE. Module AE Compiler Control Clean-Up Phase

Statement or Operation Type	Main Processing Routine	Routine Called
Input and intermediate file control. Current input file is closed and IEMAC is deleted if present Entry to the operating system: CLOSE(current input file), DELETE	IEMAC (Module AC)	None
Opens SYSLIN and SYSPUNCH data sets if required Entry to the operating system: OPEN	NOT48	ZUERR (AA)
Expands the number of blocks in storage to four text and four dictionary, if running with the 44k size option Entry to the operating system: GETMAIN	NOTDCK	None

Table AE1. Module AE Routine/Subroutine Directory

Routine/Subroutine	Function
NOT48	Opens SYSLIN and SYSPUNCH data sets as required.
NOTDCK	Expands number of blocks in storage.

Table AF. Module AF Compiler Control Sysgen Options

Function	Subroutines
This module contains no executable instructions. It is generated at SYSGEN time and passes the default options and values to the compiler	None

Table AG. Module AG Compiler Control Intermediate File Switching

Function	Subroutines.
Switches SYSUT3 from an output file to an input file Entries to the operating system: OPEN and CLOSE	None

Table AK. Module AK Compiler Control Closing Phase

Function	Subroutines
Closes files, frees scratch core and deletes unwanted phases If batch compiling, scans batch delimiter card for correct syntax and updates completion code. Entries to the operating system: TIME, CLOSE, FREEPOOL, DELETE, and FREEMAIN	ZURC(AA)

Table AL/AN. Modules AL/AN Extended Dictionary/Dictionary Phases

Statement or Operation Type	Main Processing Routine	Routine Called
Releases scratch storage allocated by ZUGC Parameters passed: PAR1 -- a count of the number of entries to ZUGC to be released Entry to the operating system: FREEMAIN if storage being replaced is outside the guaranteed 4K block	ZURC	ZUERR, ABORT
Inserts diagnostic message in the dictionary Parameters passed: PAR5 -- numeric parameter (if any); PAR6 -- message number; PAR7 -- address of text (if any) or dictionary reference (if any); PAR8 -- length of text (if any) Entry to the operating system: None	ZUERR	ZDRFAB, ZDICRF, ZDICAB
Takes a dictionary reference and points at the relevant slot in the dictionary block control area (DSLOTS) Parameters passed: PAR1 -- dictionary reference Parameters returned: Address of slot in GRA Entry to the operating system: None	CONSLD	None
Takes a text reference and points at the relevant slot in the text block control area (TSLOTS) Parameters passed: PAR1 -- text reference Parameters returned: Address of slot in GRA Entry to the operating system: None	CONSLT	
Allocates space for a text block Parameters passed: Relative track address of the block (if block is on disk) in RDTTR. Otherwise RDTTR is zero Parameters returned: Address of block in GR0 Entry to the operating system: GETMAIN(VC) if storage available. OPEN if no space left for text blocks	TRYMRT	DFREE, TFREE, ZUPL, ABORT
Allocates space for a dictionary block Parameters passed: Relative track address of block (if block is on disk) in RDTTR. Otherwise RDTTR is zero Parameters returned: Address of block in GR0 Entry to the operating system: GETMAIN(VC) if storage available. Open if no space left for dictionary blocks	TRYMRD	DFREE, TFREE, ZUPL, ABORT
Investigates the dictionary block control used (DSLOTS), to find which block can be written on to disk to make space for a different block in storage Parameters passed: Relative track address of block required in storage in RDTTR. RDTTR=0 if a block is being created Parameters returned: Address of block in storage in BLOKAD Entry to the operating system: None	DFREE	CONSLD, ZUERR, ABORT, WDREAD, WRTRD, WDWRIT

Table AL/AN. Modules AL/AN Extended Dictionary/Dictionary Phases (cont'd)

Statement or Operation Type	Main Processing Routine	Routine Called
Investigates the text block control area (TSLOTS), to find which block can be written onto disk to make space for a different block in storage Parameters passed: Relative track address block required in storage in RDTTR. RDTTR=0 if a block is being created Parameters returned: TFREE Entry to the operating system: None	TFREE	CONSLD, ZUERR, ABORT, WDREAD, WRTRD, WDWRIT
Create space in storage by writing on disk Parameters passed: RDTTR=0, BLOKAD contains address of block that can be written out Parameters returned: BLOKAD contains address of block in storage that is now available Entry to the operating system: WRITE(BSAM), CHECK, NONE	WDWRIT	WRITEX
Writes a block onto disk and reads a second one into its place in storage Parameters passed: RDTTR contains relative track address of block to be read. BLOKAD contains address of block to be written Parameters returned: NOTTR contains relative track address of block in storage Entry to the operating system: WRITE(BSAM), CHECK, NOTE	WRTRD	READX, WRITEX, ZUERR, ABORT
Reads a block from disk into space already available in storage Parameters passed: RDTTR holds relative track address of block to be read. BLOKAD holds address of space in storage Parameters returned: BLOKAD holds address of block in storage Entry to the operating system: None	WDREAD	READX
Writes a block onto disk Parameters passed: TEMP4 holds relative track address of space on disk Entry to the operating system: XDAD(WI), WAIT	WRITEX	ZUPL, ZEND
Reads a block from disk Parameters passed: TEMP4 holds relative track address of block on disk Parameters returned: PAR1 -- address of input area Parameters returned: PAR2 -- record length Entry to the operating system: GET MOVE (QSAM)	READX	ZUPL, ZEND
Reads a record from SYSIN Parameters passed: PAR1 -- address of input area Parameters returned: PAR2 -- record length Entry to the operating system: GET MOVE (QSAM)	ZURD	None

Table AL/AN. Modules AL/AN Extended Dictionary/Dictionary Phases (cont'd)

Statement or Operation Type	Main Processing Routine	Routine Called
Puts a record out to SYSPRINT. Pagination (paging action) is performed automatically Parameters passed: PAR1 -- address of output buffer. PAR3 -- address of output buffer containing page heading (if any) Entry to the operating system: PUT LOCATE (QSAM)	ZUPL	PLERRX
Finds a new text block. Optionally chains the new block to the current block and changes the status of the current block Parameters passed: PAR1 -- optionally, a reference to the current block. PAR2 -- a status and chain indicator Parameters returned: PAR1 -- reference to new block; PAR2 -- absolute address of the beginning of block Entry to the operating system: None	ZUTXTC	CONSLT, TRYMRT, ZUERR, ABORT, BLKERR
Finds the next text block in the chain. Optionally, changes the status of the current block Parameters passed: PAR1 -- a reference to the current block; PAR2 -- a status indicator Parameters returned: PAR1 -- reference of the next block in the chain. PAR2 -- absolute address of next block in chain Entry to the operating system: None	ZCHAIN	CONSLT, TRYMRT, BLKERR
Changes the status of the referenced text block Parameters passed: PAR1 -- a reference to the block. PAR2 + 3 -- required 'status' byte Entry to the operating system: None	ZALTER	CONSLT, BLKERR
Converts a text reference to an absolute address and optionally, does not change status of the block Parameters passed: PAR1 -- reference to be converted and option indicator bit Parameters returned: PAR1 -- the absolute address Entry to the operating system: None	ZTXTAB	CONSLT, TRYMRT, BLKERR
Converts an absolute address to a text reference Parameters passed: PAR1 -- a text reference to the block containing the absolute address; PAR2 -- the address to be converted Parameters returned: PAR1 -- the required text reference Entry to the operating system: None	ZTXTRF	CONSLT, BLKERR, ZUERR, ABORT
Enters message 'REFERENCED BLOCK NOT IN USE' into dictionary and then terminates compilation Entry to the operating system: None	BLKERR	ZUERR, ABORT

Table AL/AN. Modules AL/AN Extended Dictionary/Dictionary Phases (cont'd)

Statement or Operation Type	Main Processing Routine	Routine Calles
Supplies storage space for scratch purposes. Allocation is made in 512 bytes at a time Parameters passed: PAR1 -- a count of the number of 512 byte blocks required Parameters returned: PAR1 -- address of the allocated storage Entry to the operating system: None	ZUGC	TRYMRT, ZUERR, ABORT
Converts an absolute address to a dictionary reference Parameters passed: PAR1 -- any reference to the block containing the absolute address; PAR2 -- the absolute address to be converted Parameters returned: PAR1 -- the required dictionary reference Entry to the operating system: None	ZDABRF	CONSLD, ZUERR, ABORT, BLKERR
Converts a dictionary reference to an absolute address Parameters passed: PAR1 -- the dictionary reference Parameters returned: PAR1 -- the absolute address Entry to the operating system: None	ZDRFAB	CONSLD, TRYMRD, BLKERR
Makes an unaligned dictionary entry and returns an absolute address Parameters passed: PAR1 -- address of entry to be made; PAR2 -- length of entry Parameters returned: PAR1 -- address of entry in dictionary. PAR4 -- some reference to the block Entry to the operating system: None	ZNALAB	ZDRFAB, ZDABRF, TRYMRD, ZUPL, ZUERR, ABORT, CONSLD
Makes an aligned dictionary entry and returns an absolute address Parameters passed: PAR1 -- address of entry to be made; PAR2 -- length of entry Parameters returned: PAR1 -- address of entry in dictionary. PAR4 -- some reference to the block Entry to the operating system: None	ZDICAB	ZDRFAB, ZDABRF, TRYMRD, ZUPL, ZUERR, ABORT, CONSLD
Makes an unaligned dictionary entry and returns dictionary reference Parameters passed: PAR1 -- address of entry to be made; PAR2 -- length of entry Parameters returned: PAR1 -- reference of entry in dictionary. PAR4 -- absolute address of the entry Entry to the operating system: None	ZNALRF	ZDRFAB, ZDABRF, TRYMRD, ZUPL, ZUERR, ABORT, CONSLD
Makes an aligned dictionary entry and returns a dictionary reference Parameters passed: PAR1 -- address of entry to be made; PAR2 -- length of entry Parameters returned: PAR1 -- reference of entry in dictionary. PAR4 -- absolute address of the entry Entry to the operating system: None	ZDICRF	ZDRFAB, ZDABRF, TRYMRD, ZUPL, ZUERR, ABORT, CONSLD

Table AL1/AN1. Modules AL/AN Routine/Subroutine Directory

Routine/Subroutine	Function
TFREE	Finds text block which can be written on disk to make space for a new block in storage.
TRYMRD	Allocates space for a dictionary block.
TRYMRT	Allocates space for a text block.
WDREAD	Reads a block from disk into storage.
WDWRIT	Creates space in storage by writing a block on disk.
WRITEX	Writes a block on disk.
WRTONL	Writes on last block on disk.
WRTRD	Writes a block onto disk, reads a second one into its place in storage.
ZALTER	Changes status of referenced text block.
ZCHAIN	Finds next text block in chain.
ZDABRF	Converts an absolute address to a dictionary reference.
ZDRFAB	Converts a dictionary reference to an absolute address.
ZDICAB	Makes an aligned dictionary entry and returns absolute address.
ZDICRF	Makes an aligned dictionary entry and returns dictionary reference.
ZNALRF	Makes unaligned dictionary entry and returns dictionary reference.
ZNALAB	Makes unaligned dictionary entry and returns absolute address.
ZTXTAB	Converts text reference to an absolute address.
ZTXTRF	Converts absolute address to a text reference.
ZUERR	Inserts diagnostic message in dictionary.
ZURD	Reads a record from SYSIN.
ZUGC	Supplies storage space for scratch purposes.
ZURC	Releases scratch storage.
ZUPL	Puts record out to SYSPRINT data set.
ZUTXTC	Obtains a new text block.

Table AM. Module AM Compiler Control Phase Marking

Function	Main Processing Routine	Routines Used
Marks all non-optional phases and all phases influenced by compiler invocation-time options	IEMAM	REQEST, RLSCTL (both in AA)

● Table AT. Module AT Compiler Debugging Module

Statement or Operation Type	Main Processing Routine	Routines Used
Reads in control cards and constructs control tables Entry to the operating system: None	INIT	CNTRL,NXTFLD,TROFFSET,ZUPL(AA), ZURD(AA)
Entered each time a phase is loaded so that replacing (REP) or verifying may be done. Inserts start or end trace/flow markers (privileged operations) Entry to the operating system: None	LOAD	PATCLOAD,TRACLOAD,ATCALL,HEXOUT, JBPT
Entered each time a phase is deleted and updates control tables Entry to the operating system: None	TRACRELS	None
Entered from Interrupt Handler in module AA after privileged operation encountered (0C2 interrupt) signifying trace/flow marker. Carries out initialization before starting or after ending trace/flow Entry to the operating system: None	TRACEIT	ATCALL,JBPT
Analyzes each instruction to be traced. Executes the instruction and prints a line containing: the instruction, its address, the resulting condition code, and the subsequent contents of registers and storage used by the instruction. Entry to the operating system: PUT MODE (QSAM)	TRACE	CALL,FULLSUB,FULL2,JBPT,FULLAD

•Table AT1. Module AT Routine/Subroutine Directory

Routine/Subroutine	Function
ATCALL	Calls the print routine and then clears the print line.
CALL	Similar function to ATCALL but contained within TRACE routine.
CNTRL	Carries out replacing (REP) and verifying in phases loaded before AT. Inserts start trace markers in phases loaded before AT.
FULLAD	Determines address of storage to be altered by instruction currently being traced.
FULLSUB	Translates hexadecimal to a character representation of hexadecimal. Used in TRACE routine.
FULL2	Analyzes instructions to be traced and moves information to the print line.
HEXOUT	Similar function to FULLSUB. Used in routine LOAD.
INIT	Builds control fields using information from control cards in the input.
JBPT	Prints a line of trace information.
LOAD	Controls subroutines PATCLOAD and TRACLOAD.
NXTFLD	Skips blank characters on input control cards.
PATCLOAD	Carries out replacing (REP), if requested, after each phase is loaded.
TRACE	Traces each instruction and prints trace information.
TRACEIT	Describes whether TRACE/FLOW must start or end.
TRACLOAD	Inserts start trace markers in phases after they have been loaded.
TRACRELS	Updates control tables when a phase is deleted.
TROFFSET	Translates character representation of hexadecimal to hexadecimal.

Chart 01. Compile-time Processor Logical Phase Flowchart

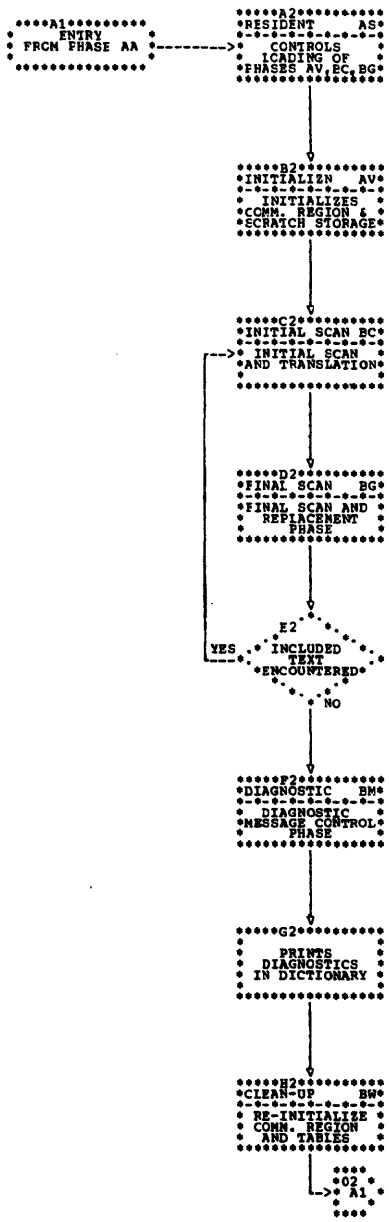

Chart AS. Phase AS Overall Logic Diagram

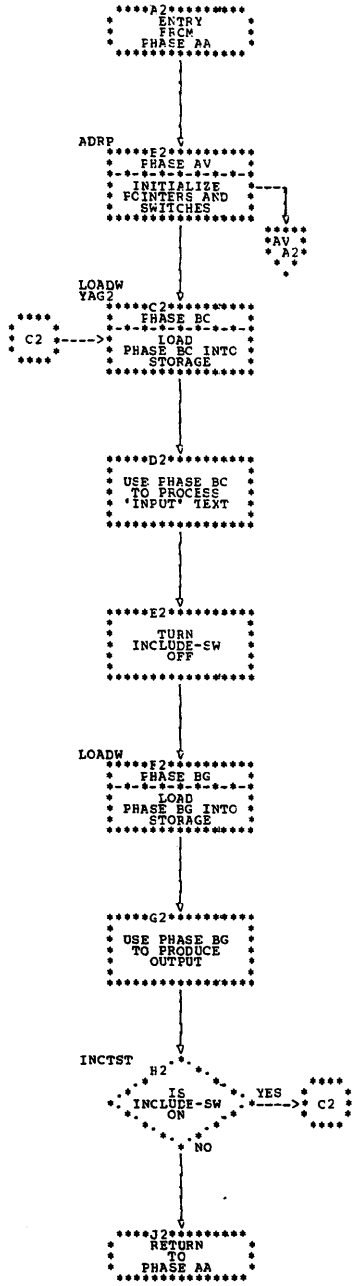

Chart AV. Phase AV Overall Logic Diagram

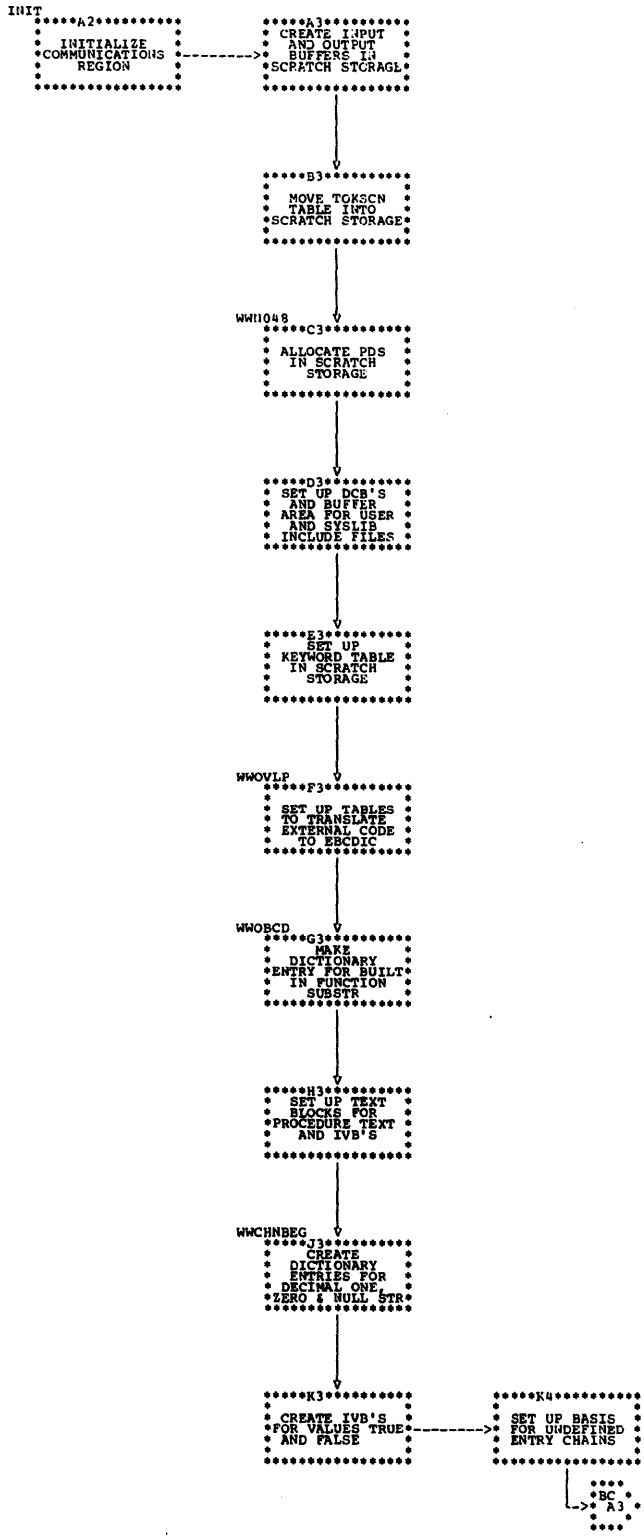

Chart BC. Phase BC Overall Logic Diagram

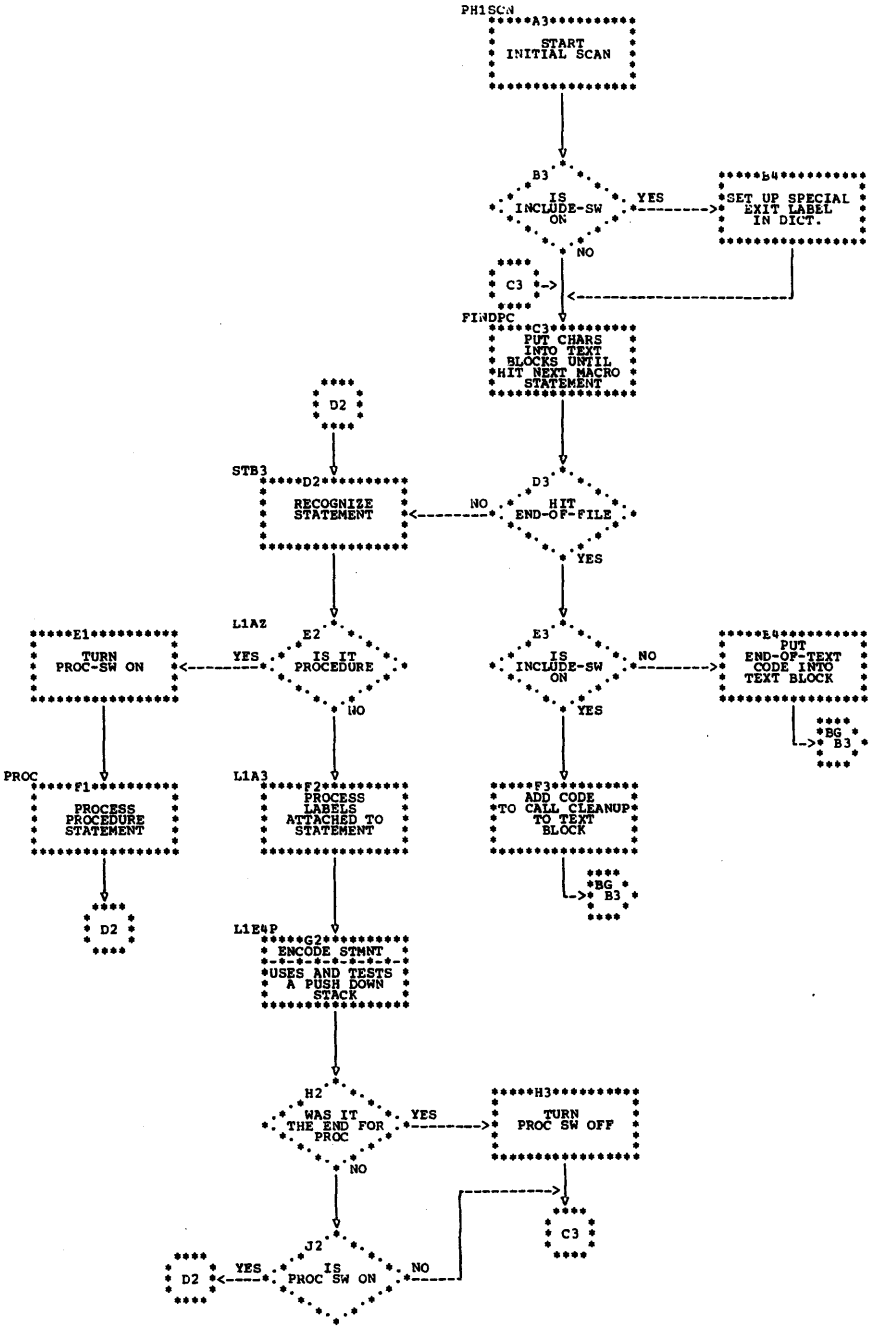

Chart BG. Phase BG Overall Logic Diagram

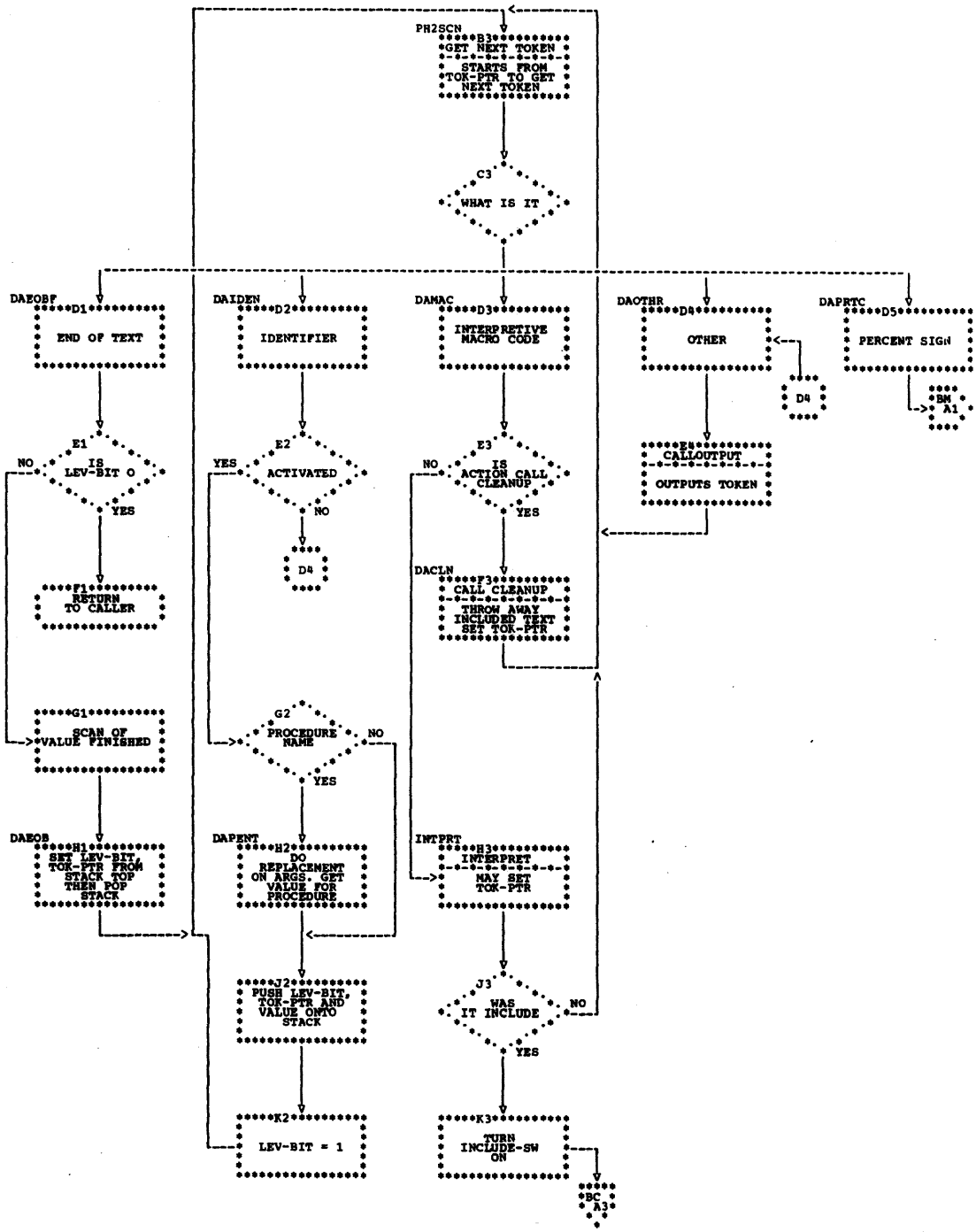

Chart BM. Phase BM Overall Logic Diagram

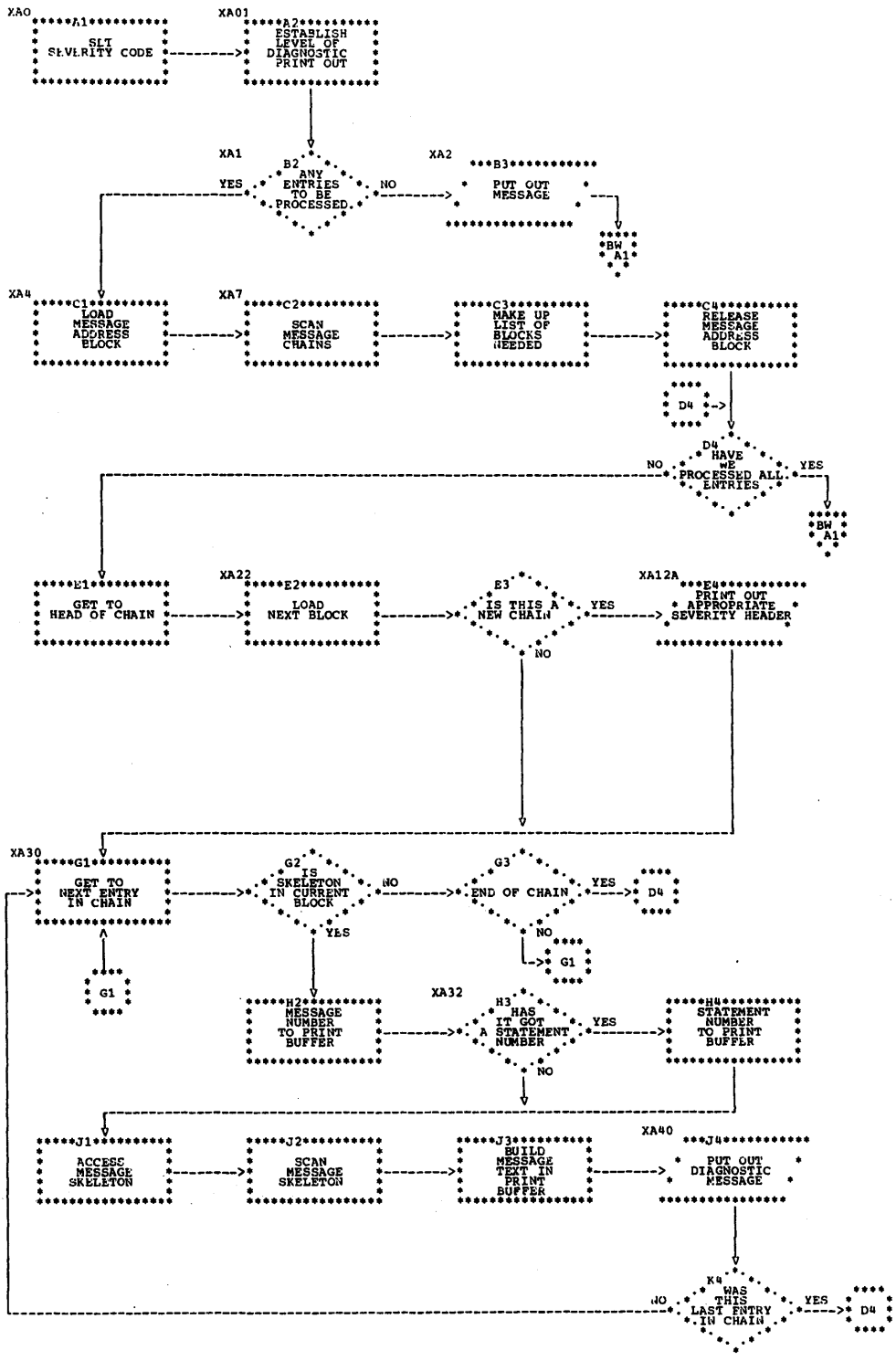

Chart BW. Phase BW Overall Logic Diagram

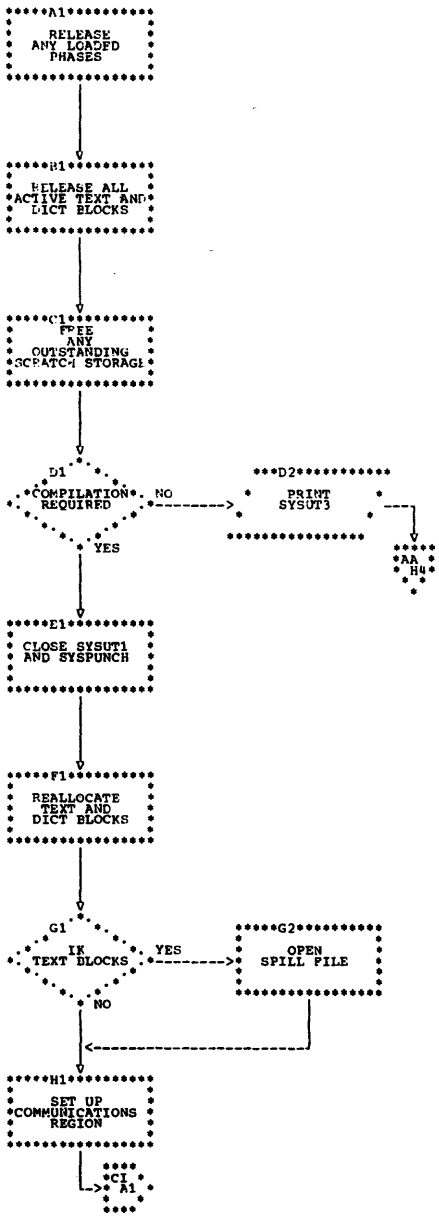

Table AS. Phase AS Resident Phase for Compile-time Processing

Statement or Operation Type	Main Processing Routine	Subroutines Used
Initializes switches for compile-time processor	ADRP	None
Loads phases for compile-time processor	ADRP	LOADX (AA)
Determines whether Phase BC should be reloaded	ADRP	None

Table AS1. Phase AS Routine/subroutine Directory

Routine/Subroutine	Function
ADRP	Initializes switches for compile-time processor.
BCKUP2	Backs up token pointer two places.
CHBLK	Changes currently busy IVB block status and gets a new block
CLSBUF	Handles calls to close and write out the buffer. Loads and bases phase BJ if necessary.
COMENT	Scans the limits of a comment, transfers each character into the output buffer.
ENDIVB	Closes an IVB chain.
FREVAL	Releases a chain of IVBs containing a no longer needed value and returns chain to free list.
GETIVB	Removes an IVB from the free chain for use by the calling routine.
GNC	Updates TOKPTR to point to the next character in a particular input stream.
HASH	Accepts an EBCDIC identifier as input and outputs an index. The index indicates the beginning of the HASH chain with which the identifier is associated.
INCTST	Determines whether Phase BC needs to be reloaded on return from Phase BG.
INPUT	Reads in an input record from the source data set or from included text.
INRD	Reads physical records from the included data set; unblocks and sends them back one logical record at a time.
NXTTXT	Gets a new text block and sets up address slots.
OUTPTC	Outputs a single character into one of the three output media: IVB's, text blocks, or external records.
SRHDIC	Searches the dictionary for the presence of a named item.
STRING	Scans the limits of a string constant, transfers each character to output.
TOKSCN	Examines text, character by character recognizing and returning each logical unit of text (called a token). Tokens include identifiers, constants, operators, delimiters, etc.
UPNEWL	Updates temporary linecount slot.
YAG2	Loads processor phases for the compile-time processor.

Table AV. Phase AV Macro Processing Initialization

Statement or Operation Type	Main Processing Routine	Subroutines Used
Initializes communication area for compile-time processing	INIT	None
Allocates push down stack from scratch storage	INIT	None
Allocates translation tables	INIT	None
Enters SUBSTR into dictionary	INIT	None
Creates dictionary entries and values for constants pool	INIT	None

Table AV1. Phase AV Routine/Subroutine Directory

Routine/Subroutine	Function
INIT	Entry point to the initialization phase. This initializes the communication region for compile-time processing.
WWN048	Allocates the push down stack (to be used by Phases BC and BG) from scratch storage.
WWOVLP	Sets up tables to translate external code to EBCDIC; tests the BCD,EBCDIC option.
WWOBCD	Enters built-in function SUBSTR into dictionary.
WWCHNBEG	Creates dictionary entries and values for compile-time constant pool.
WWMOVEIT	Moves Subroutine package into core for use by BC.
INCLUDE	INCLUDE Processor
LABELS (BC	LABEL List Processor.
GOTO Subroutine	GOTO Statement Processor.
ACT Package)	Active/Deactivate Processor.
ELSE	ELSE Clause Processor.

Table BC. Phase BC Initial Scan and Translation

Statement or Operation Type	Main Processing Routine	Subroutines Used
Recognizes statement type	PH1SCN	TOKEN, DELETE
Scans until next % character	PH1SCN	FINDPC
Processes PROCEDURE statement	PH1SCN	TOKEN, DELETE, IDSRCH, ADDSP (FREVAL, OUTPTC)
Processes labels attached to statement	PH1SCN	IDSRCH
Encodes statement into internal text	PH1SCN	PARSE, TOKEN, IDSRCH, ADDSP DELETE, CHECK
Cleans up after INCLUDE in initial scan	PH1SCN	None
Begins statement identification process	PH1SCN	None

Table BC1. Phase BC Routine/Subroutine Directory

Routine/Subroutine	Function
ADCONS	Obtains the dictionary reference of a constant, entering it into the dictionary if necessary.
ADDSP	Adds a processor-created item to the dictionary.
ADICT	Adds a normal item to the end of the appropriate hash chain and returns the dictionary reference.
ADPROC (BF)	Processes PROCEDURE statement.
ASSIGN	Processes assignment statements.
CHECK	Checks back for undefined labels and identifiers not declared within the block.
DECLAR (BF)	Declare statement processor.
DELETE	Skips over bad text up to the end of a statement, field or procedure.
DO (BE)	DO statement processor.
DONE (BE)	Checks stack for possible THEN's or ELSE's after statement is completed.
FINDPC	Scans source text, character by character, searching for macro percent character.
IDSRCH	Obtains the dictionary reference of an identifier, entering it in the dictionary if necessary.
IF (BE)	IF statement processor.
KYWDSR	Checks for single or multiple keywords.
PARSE (BE)	Parses and generates interpretive macro code for compile-time expressions.
PIF4	Provides special handling for end of included text.
PH1SCN (BE)	Main controlling routine for phase.
RETURN	Processes RETURN statement for PROC.
STB3	Collects labels into label list and identifier statement type on first two tokens of statement.
STMT (BE)	Diagnoses statement type and builds label list.
TOKEN	Returns significant tokens to PH1SCN and writes out diagnostics for tokens in error.
UPDLIN	Generates an update linecount instruction.

Note: See also BC Subroutine Package in Table AV1.

Table BG. Phase BG Final Scan and Replacement

Statement or Operation Type	Main Processing Routine	Subroutines Used
Final scan for replacements	PH2SCN	OUTPUT, TOKSCN, SRHDIC
Recognition of end of text	PH2SCN	OUTPUT, TOKSCN, SRHDIC
Recognition of an identifier	PH2SCN	OUTPUT, TOKSCN, SRHDIC
Recognition of macro action	PH2SCN	OUTPUT, TOKSCN, SRHDIC
Recognition of % character	PH2SCN	OUTPUT, TOKSCN, SRHDIC
Recognition of other characters	PH2SCN	OUTPUT, TOKSCN, SRHDIC
Terminates and cleans up INCLUDE handling	PH2SCN	OUTPUT, TOKSCN, SRHDIC
Re-establishes scan at next higher level text	PH2SCN	OUTPUT, TOKSCN, SRHDIC
Performs replacement on activated identifiers	PH2SCN	OUTPUT, TOKSCN, SRHDIC

Table BG1. Phase BG Routine/subroutine Directory

Routine/Subroutine	Function
CLOUT (BJ)	Closes output buffer, and writes out record on SYSUT3.
CONVRT	Handles conversions between the three data types used in the compile-time processor .
DACLN	Terminates INCLUDE text handling and frees text blocks containing included text.
DAEOB	Re-establishes scan at next higher level text.
DAEOBF	Recognizes and processes end of text condition.
DAIDEN	Recognizes and processes identifier in text.
DAMAC	Recognizes and processes macro action character.
DAOTHR	Recognizes character and outputs it.
DAPENT	Handles replacement operation for text identifiers.
DAPRTC	Recognizes % character and recalls Phase BC if appropriate.
FUNCTN(BJ)	Handles built-in functions.
GETDIC	Picks up a two-byte dictionary reference from scrubbed text, performs error checking, resolves indirect references, and returns both relative and absolute address.
INCONT	INCLUDE control routine. Opens DCB, finds member, sets up buffer, and initiates look-ahead read.
INTPRT (BI)	Interprets the macro code generated by the Phase I scan.
OUTPT	Handles the output of tokens.
PH2SCN	Scans text blocks.
POP	Pops the top temporary off the Phase II stack.
PROINV (BI)	Special entry point to interpreter for invocation of procedures found in source program text.
PUSH	Pushes next available temporary onto the Phase II stack.
PUNCH (BJ)	Punches down output record, in source code, on MACDCK option.
SYNCH	Synchronizes linecount, closing buffer if necessary.
TPEEK	Scans for procedure reference argument list left-parenthesis.
ZAASIGN (BI)	Performs identifier assignments for INTPRT.
ZACOMP (BI)	Performs all logical comparison operations for INTRPT.
ZACONCAT (BI)	Performs string concatenations for INTPRT.
ZACVT (BI)	Converts stack items to required type by 'RETURNS' attribute.
ZALGCL (BI)	Performs all logical operations for INTPRT.
ZAPUSH (BI)	Performs stack maintenance for INTPRT.

Table BG1. Phase BG Routine/subroutine Directory (cont'd)

Routine/Subroutine	Function
ZARITH (BI)	Performs all arithmetic operations for INTPRT.
ZATRAI (BI)	Handles transfers from included text to including text.
ZATRAN (BI)	Performs all transfer operations for INTPRT.
ZJSUBS (BJ)	Built-in function SUBSTR.

Table BM. Phase BM Diagnostic Message Determination and Printing

Statement or Operation Type	Main Processing Routine	Subroutines Used
Determines whether error messages are to be printed	XA	None
Scans error message text skeletons and prints them out	XA8	XA50, XA70, XA90, XA110, ZUPL

Table BM1. Phase BM Routine/Subroutine Directory

Routine/Subroutine	Function
XA	Determines whether error messages are to be printed.
XA0	Sets severity code.
XA01	Establishes which message types to suppress.
XA1	Counts number of error chains to be processed.
XA2	Puts out messages if there are no diagnostics.
XA4	Prints out "COMPILER DIAGNOSTIC MESSAGES".
XA7	First scan of message chains.
XA8	Scans error message text skeletons and prints them.
XA9 (BN)	Scans to head of next non-empty chain.
XA12A	Selects and prints header for messages of given severity.
XA30 (BN)	Gets next entry in message chain.
XA32 (BN)	Builds up first part of message in buffer.
XA35 (BN)	Accesses message skeleton.
XA40 (BN)	Puts out completed message.
XA50 (BN)	Moves message text to print buffer.
XA70 (BN)	Converts binary statement number to character representation, and moves it to print buffer.
XA90 (BN)	Converts binary numeric value to character representation and moves it to print buffer.
XA110 (BN)	Moves identifier from dictionary entry to the print area.
ZUPL	Prints a line on SYSPRINT data set.

Table BW. Phase BW Clean-up Phase

Statement or Operation Type	Main Processing Routine	Subroutines Used
Resets all tables and communications region cells to the value required by the compiler proper	IEMBW	None

Chart 02. Read-In Logical Phase Flowchart

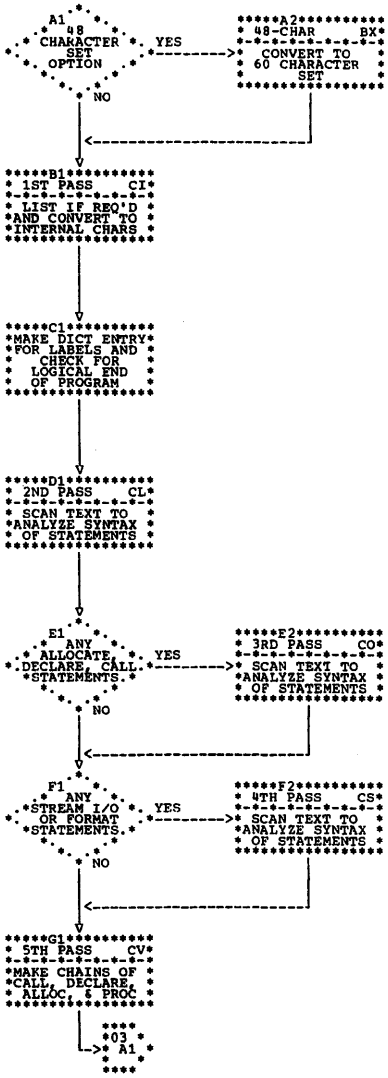

Chart BX. Phase BX Overall Logic Diagram

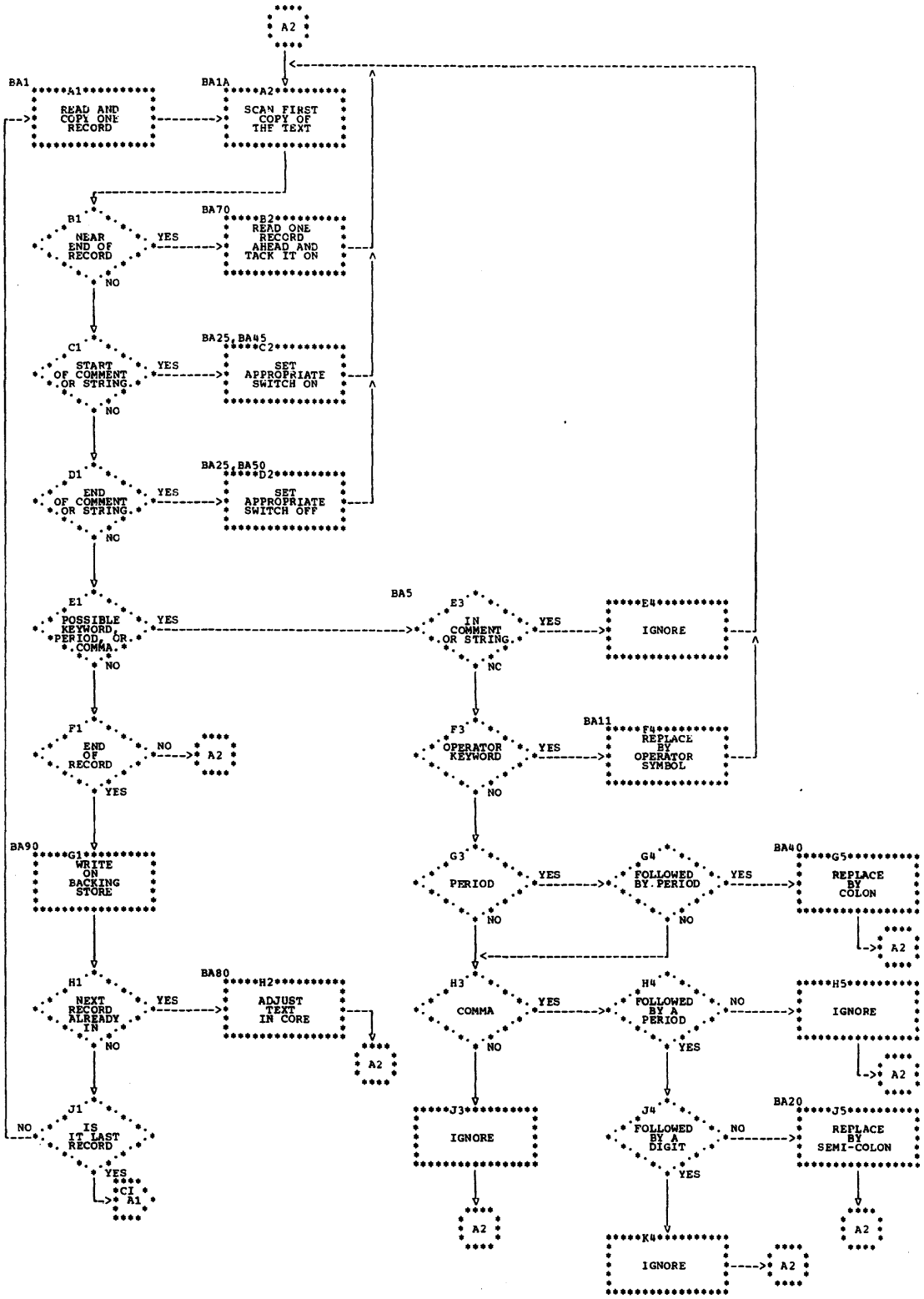

Chart CI. Phase CI Overall Logic Diagram

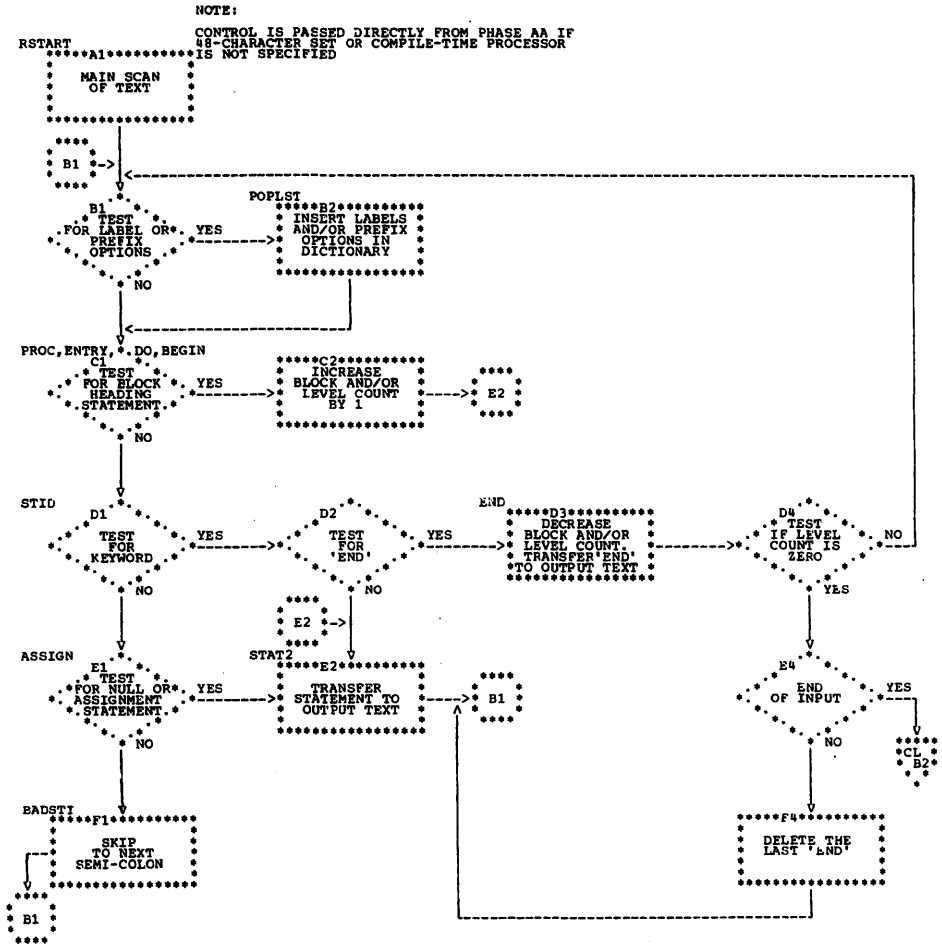

Chart CL. Phase CL Overall Logic Diagram

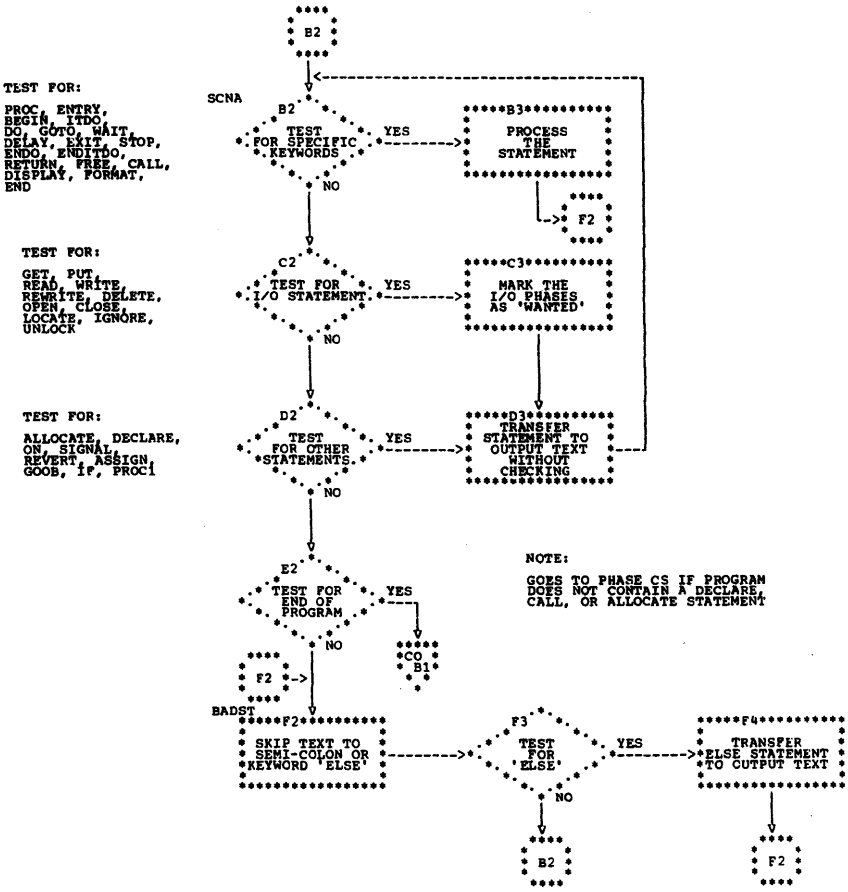

Chart CO. Phase CO Overall Logic Diagram

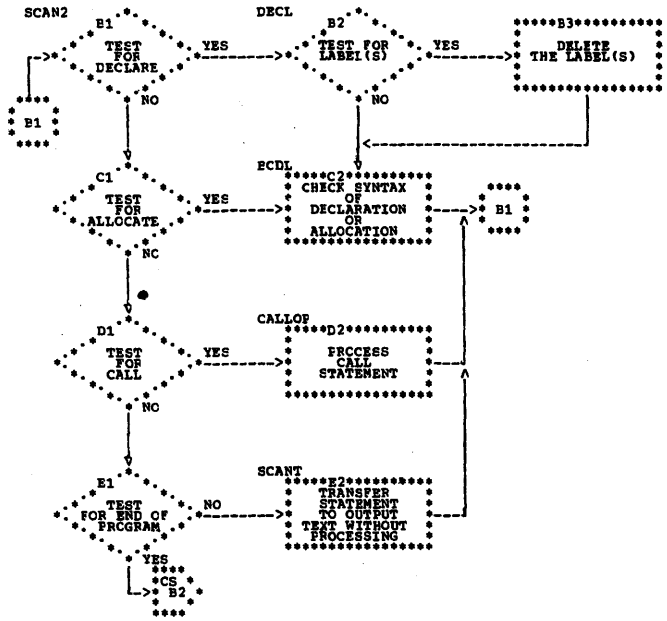

Chart CS. Phase CS Overall Logic Diagram

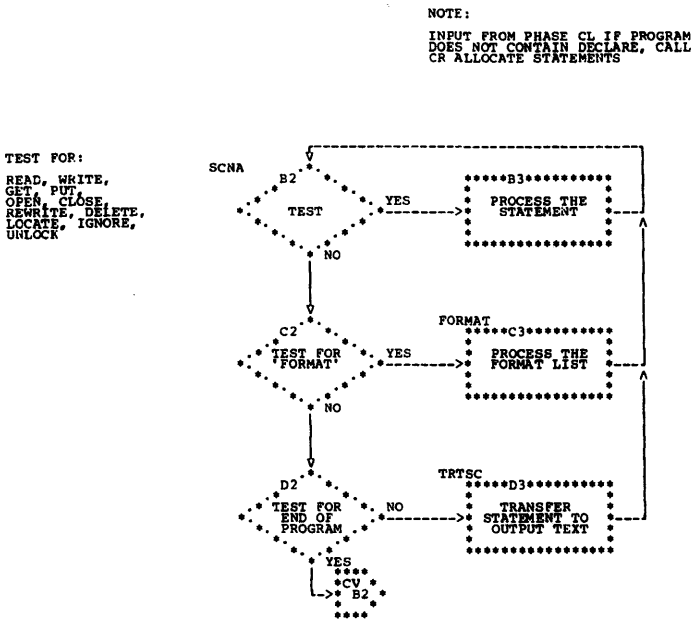

Chart CV. Phase CV Overall Logic Diagram

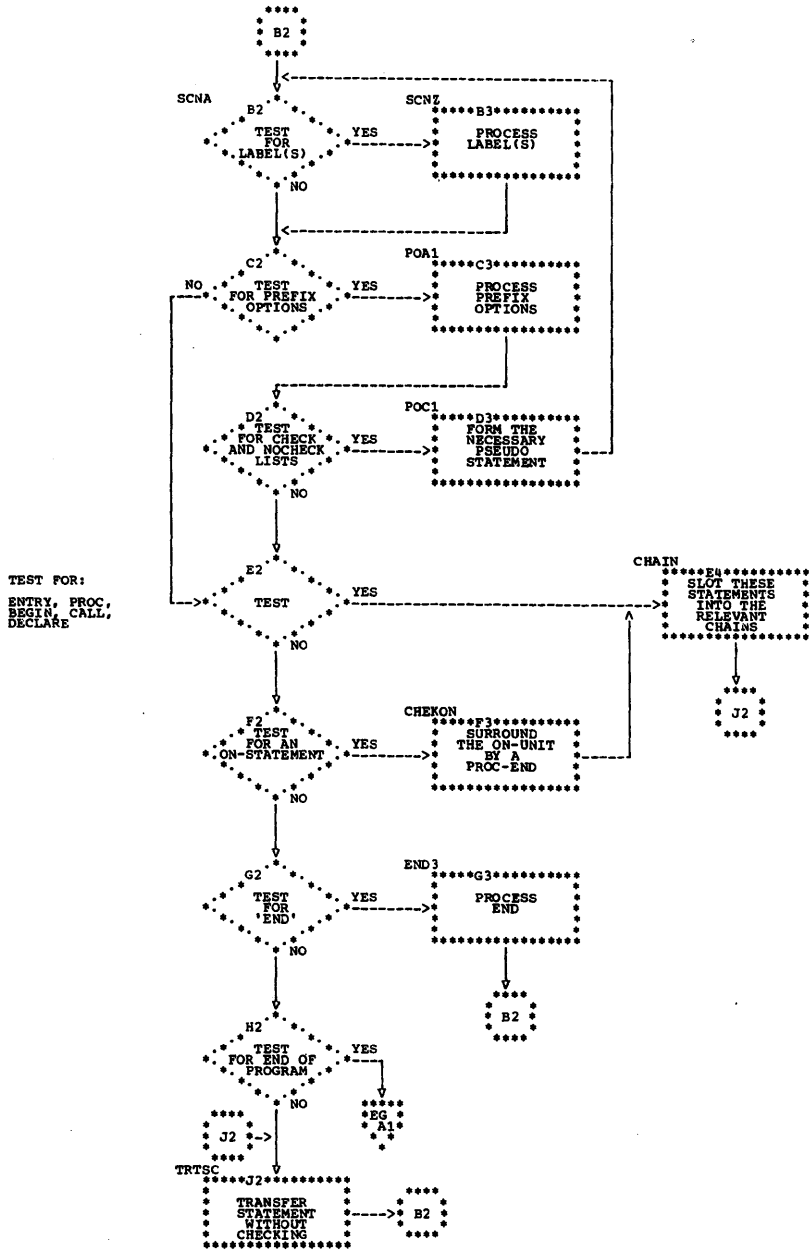

Table BX. Phase BX 48-Character Set Preprocessor

Statement or Operation Type	Main Processing Routine	Subroutines Used
Translates keyword table to internal code and initializes	BA00	None
Reads a record	BA1	ZURD (AA)
Scans text	BA1A	None
Handles operators and keywords	BA5	None
Replaces operator keywords	BA11	None
Replaces comma-dot by semi-colon where applicable	BA20	None
Deals with quote marks	BA25	None
Maintains parenthesis level count	BA30	None
Replaces period-period by colon	BA40	None
Processes a slash	BA50	None
Reads one record ahead in case of need	BA70	None
Restores the situation when a read ahead has taken place	BA80	None
Puts out converted text and original text onto backing store	BA90	ZUBW

Table CA. Module CA Read-In Common Block 1

Function	Subroutines
Provides subroutines common to all five passes of the read-in phase	ACONST, DECINT, EXP, EXPAND, EXPLST, IDENT, MVCHAR, OPTOR, SCONST, SINGLE, SQUID

Table CA1. Module CA Routine/Subroutine Directory

Routine/Subroutine	Function
ACONST	Checks for a valid arithmetic constant.
DECINT	Checks decimal integer.
EXP	Diagnoses expressions.
EXPAND	Expands iterations of string constants and picture characters.
EXPLST	Checks for a list of expressions separated by commas but enclosed in parentheses.
IDENT	Checks for a valid identifier.
MVCHAR	Moves text from one address to another.
OPTOR	Checks for an operator and replaces the two-byte operators by one-byte codes.
SCONST	Checks for a valid string constant.
SINGLE	Diagnoses a single expression in parentheses.
SQUID	Checks for a valid subscripted and qualified identifier.

Table CC. Module CC Read-In Common Block 2

Function	Subroutines
Provides subroutines common to all five passes of the read-in phase	CHAR, CHECK, KEYWD, MESAGE, NONEX, NULINS, OPTEST, PICT, PREC, SOFLOW

Table CC1. Module CC Routine/Subroutine Directory

Routine/Subroutine	Function
CHAR	Diagnoses the CHARACTER and BIT data attributes.
CHECK	Tests the top entry in the stack.
KEYWD	Identifies keywords and hands back the replacement character to the caller.
MESAGE	Provides a diagnostic message.
NONEX	Checks stack for non-executable statements.
NULINS	Inserts null statement in output text.
OPTEST	Tests the output string and moves text to the output.
PICT	Diagnoses a picture. It uses a TRT table set up for the purpose.
PREC	Diagnoses the precision, and the attributes and format items which use it.
SOFLOW	Bumps stack pointer and checks for stack overflow.

Table CE. Modules CE, CK, CN, and CR Read-In Keyword Block

Function	Subroutines
Provides tables of keywords in internal code, together with replacement code. No functional code exists in these modules. Refer to Appendix B for details of keyword tables.	None

Table CI. Phase CI Read-In First Pass

Statement or Operation Type	Main Processing Routine	Subroutines Used
Controls main scan, identifies statements, and analyzes some in detail	RSTART	ASSIGN, BADST1, BEGIN, DO, ELSE, BUMP, END, EOP, ERROR, IF, ON, POPLST, PROC, READ, SIGRVT, STAT2, STRING, plus those subroutines contained in modules CA and CC

Table CI1. Phase CI Routine/Subroutine Directory

Routine/Subroutine	Function
ASSIGN (CG)	Diagnoses an assignment statement.
BADST1	Recovers from failure to recognize a statement type; skips to next semi-colon.
BEGIN (CG)	Checks the BEGIN statement and makes an entry in the first pass stack.
BUMP	Advances the input Data Pointer (DP), skips blanks, if any, forcing source text to be read into storage as necessary.
DO (CG)	Checks the DO statements and makes an entry in the first pass stack.
ELSE (CG)	Unstacks an IF compound statement.
END (CG)	Processes three different types of END statements; PROCEDURE-BEGIN; DO; iterative DO.
ENTRY	Processes ENTRY statement.
EOP	Processes end-of-program marker, and returns to compiler control in order to load next pass.
ERROR (CG)	Handles false starts on possible statements.
IF (CG)	Scans the IF statement and makes entry in first pass stack.
ON (CG)	Diagnoses the ON statement and makes entry in first pass stack.
POPLST	Removes prefix options from the text and places them in the dictionary.
PROC	Scans the PROCEDURE and ENTRY statement and makes an entry in the first pass stack.
READ	Reads source text into storage, translating it into internal code, except for character strings; removes comments; prints source listing and prefix options.
RSTART	Controls the first pass scan. Enters statement labels into the dictionary.
SIGRVT (CG)	Scans SIGNAL and REVERT statements.
STAT2 (CG)	Handles all other statements.
STID	Statement identifier routine.
STRING (CG)	Scans character strings.

Table CL. Phase CL Read-In Second Pass

Statement or Operation Type	Main Processing Routine	Subroutines Used
Scans for statements handled in this pass, analyzing them in detail. Skips over other statements	SCNA	BUMP, DELAY, DSPLAY, DO, FREE, GOTO, ITDO, LABEL, PROC, RETURN, TRTSC, plus those subroutines contained in modules CA and CC

Table CL1. Phase CL Routine/Subroutine Directory

Routine/Subroutine	Function
BUMP	Increments the input Data Pointer (DP), skipping over blanks, obtaining a new text block if necessary.
DELAY	Processes DELAY statements.
DSPLAY	Processes DISPLAY statements.
DO	Processes DO statements.
EOP	Processes end-of-program marker, and releases control to phase CO or CS, or CV (CO and CS are optional phases).
FREE	Processes FREE statements.
GOTO	Processes GOTO statements.
ITDO	Processes iterative DO statements.
LABEL	Diagnoses LABEL attributes.
OPTION	Handles OPTIONS attribute on PROCEDURE or ENTRY statements.
PROC (CM)	Analyzes PROCEDURE attributes and options, and completes the diagnosis of PROCEDURE and ENTRY statements.
RETURN	Processes RETURN statements.
SCNA	Main controlling routine of this pass.
TRTSC	Skips over all other statements.

Table CO. Phase CO Read-In Third Pass

Statement or Operation Type	Main Processing Routine	Subroutines Used
Scans for DECLARE, CALL, and ALLOCATE statements. Analyzes syntax of attributes by calling appropriate subroutines	SCAN2	ATTLST, BUMP, CALLOP, DECL, DEFIND, DIMS, ENTRY, ENVMNT, EOP, GENRIC, LABEL, LIKE, USES, IVLIST, and those subroutines contained in modules CA and CC

Table CO1. Phase CO Routine/Subroutine Directory

Routine/Subroutine	Function
ATTLST	Processes an attribute list. (Recursive)
BDCL	Processes DECLARE or ALLOCATE statement.
BUMP	Advances Data Pointer (DP), obtaining new input block if necessary.
CALLOP (CP)	Checks CALL statements and options.
DECL	Processes the DECLARE and ALLOCATE statements.
DEFIND	Checks the DEFINED attribute.
DIMS	Examines the dimension specifications.
ENTRY	Checks the ENTRY attribute.
ENVMNT (CP)	Removes environment information from the text and inserts it into the dictionary.
EOP	Processes the end-of-program marker, and releases control.
GENRIC	Processes the GENERIC attribute.
IVLIST (CP)	Processes the INITIAL attribute.
LABEL (CP)	Analyzes LABEL attribute.
LIKE	Processes the LIKE attribute.
PSQUID (CP)	Checks for a qualified subscripted identifier in parenthesis.
REFER (CP)	Checks the REFER attribute.
SCAN2	Scans for DECLARE, CALL, or ALLOCATE statements, moves others to the output string unaltered.
SCANT	Moves text to semicolon without alteration.
USES	Deletes the now obsolete USES and SETS attributes from text.

Table CS. Phase CS Read-In Fourth Pass

Statement or Operation Type	Main Processing Routine	Subroutines Used
Controls main scan and identifies I/O statements for further analysis	SCNA	EOP, FORMAT, GET, LIST, OPEN, READ, TRTSC, plus those subroutines contained in modules CA and CC

Table CS1. Phase CS routine/Subroutine Directory

Routine/Subroutine	Function
EOP	Processes end-of-program marker and releases control.
FORMAT (CT)	Processes the FORMAT statement and format lists.
GET (CT)	Processes GET and PUT statements.
LIST	Processes data lists.
OPEN (CT)	Diagnoses OPEN and CLOSE statements.
READ	Checks the syntax of RECORD I/O statements READ, WRITE, REWRITE, and DELETE. This routine also checks for permissible combinations of these statements.
SCNA	Main scan of this pass.
TRTSC	Skips over all statements other than I/O, moving them to the output text.

Table CV. Phase CV Read-In Fifth Pass

Statement or Operation Type	Main Processing Routine	Subroutines Used
Identifies statements for which it must build chains	SCNA	CALLIN, CHAIN, DECL3, DO3, END3, ENTRY3, EOP, POA1, PROC3, TRTSC, and those subroutines contained in modules CA and CC.

Table CV1. Phase CV Routine/Subroutine Directory

Routine/Subroutine	Function
CALLIN (CW)	Makes up the CALL chain.
CHAIN	Forms chains.
CHECKON	Checks the fifth pass stack for ON entry, in order to insert PROC-END statements round the ON unit.
DECL3	Chains the DECLARE statement to the appropriate PROC or BEGIN statement.
DO3	Makes a stack entry for DO block.
END3	Checks the fifth pass stack.
ENTRY3	Makes an entry in the ENTRY chain.
EOP (CW)	Processes end-of-program marker, and releases control.
ILABSN (CW)	Creates pseudo-assignment statements for initial labels.
POA1	Analyzes prefix options in greater detail.
POC1	Processes check lists.
PROC3	Makes an entry in the PROCEDURE-BEGIN chain.
SCNA	Main controlling routine of the pass.
SCNZ	Extracts statement number for label entry.
TRTSC	Skips over statements not required for analysis in this phase.

Chart 03. Dictionary Logical Phase Flowchart

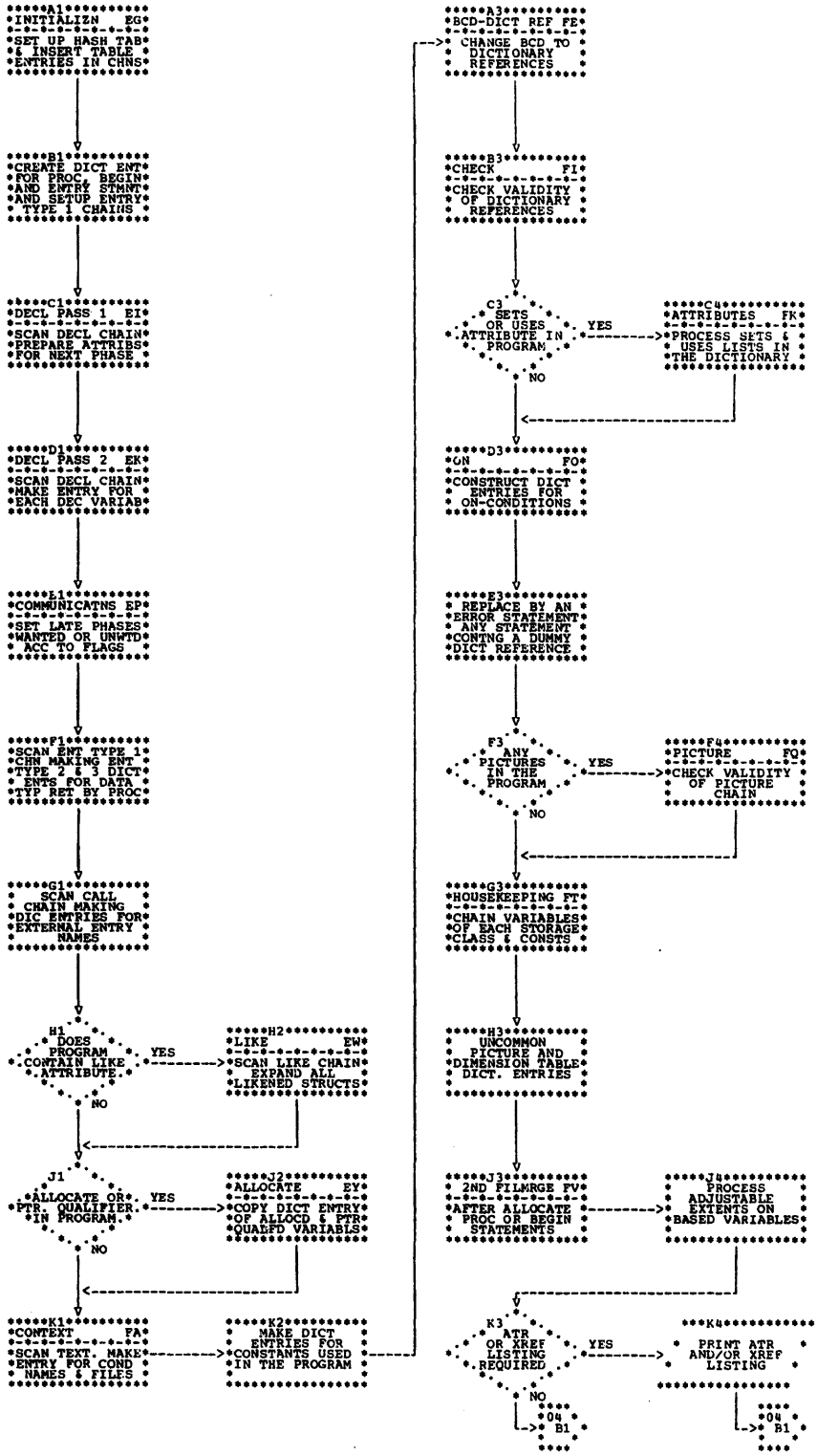

Chart EG. Phase EG Overall Logic Diagram

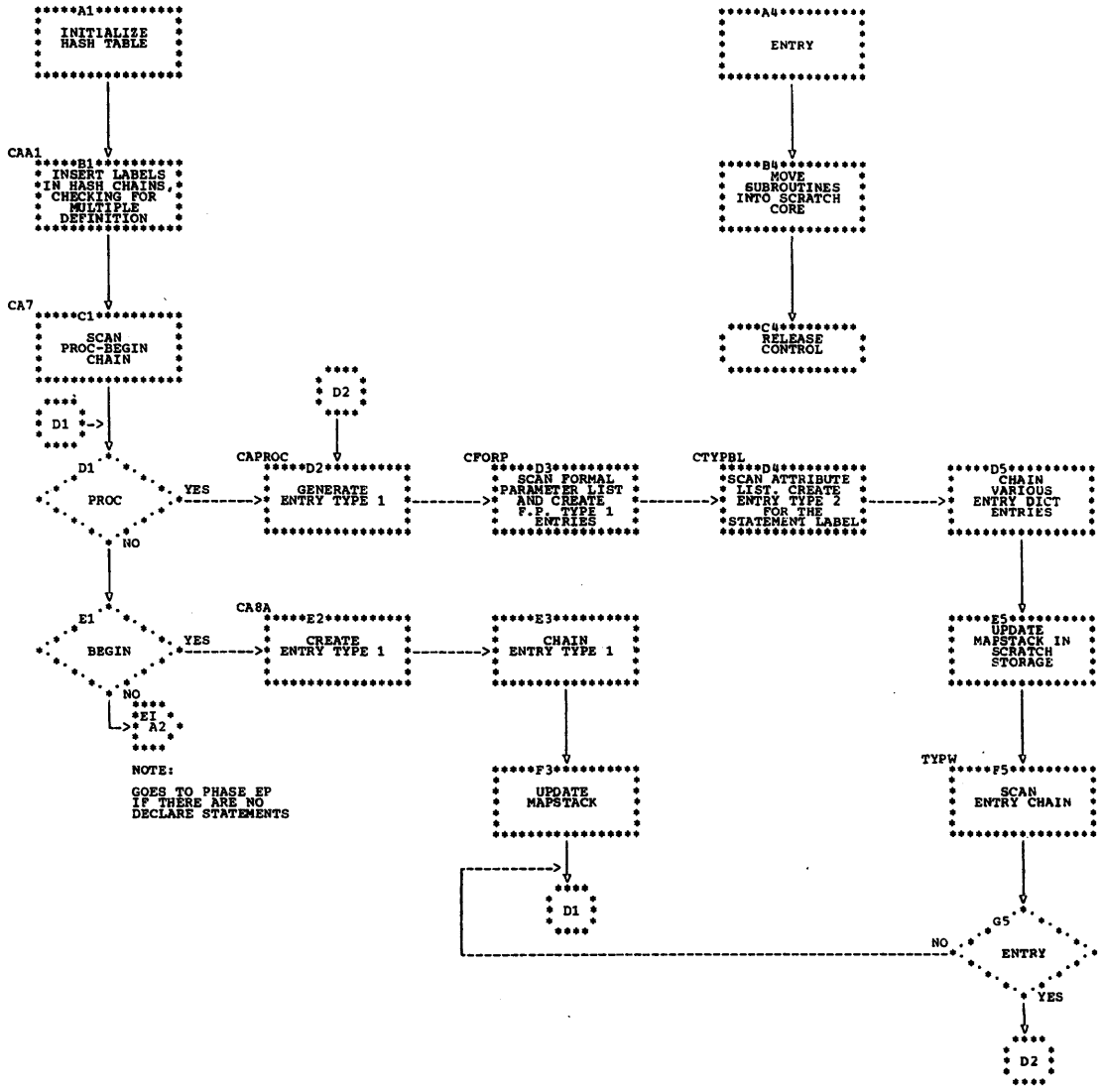

Chart EI. Phase EI Overall Logic Diagram

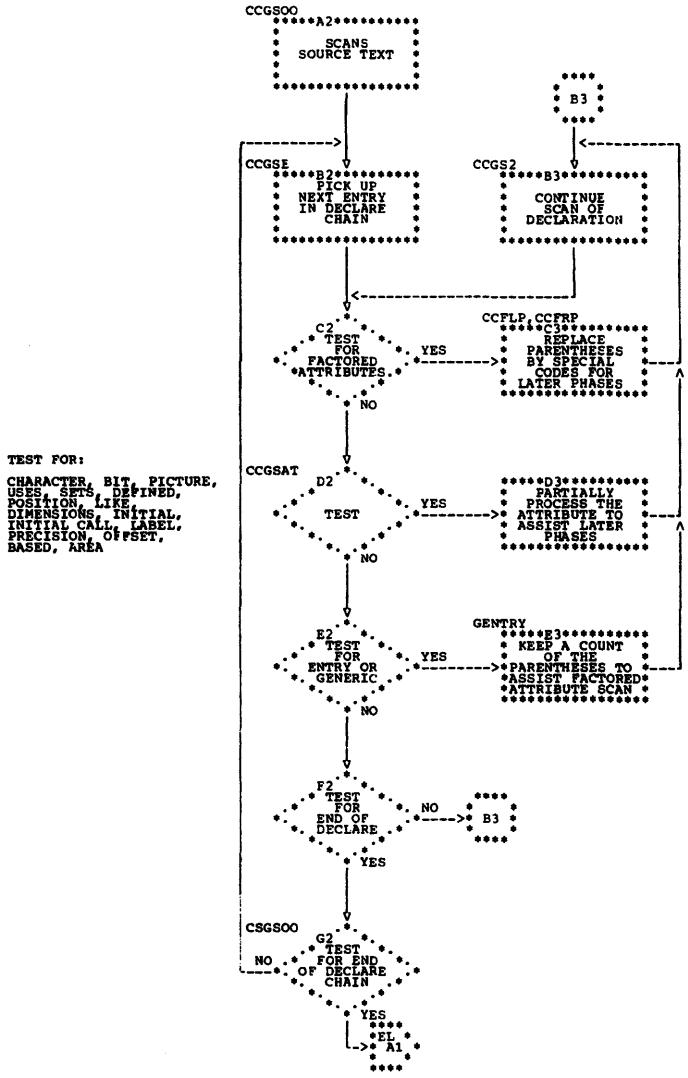

Chart EL. Phase EL Overall Logic Diagram

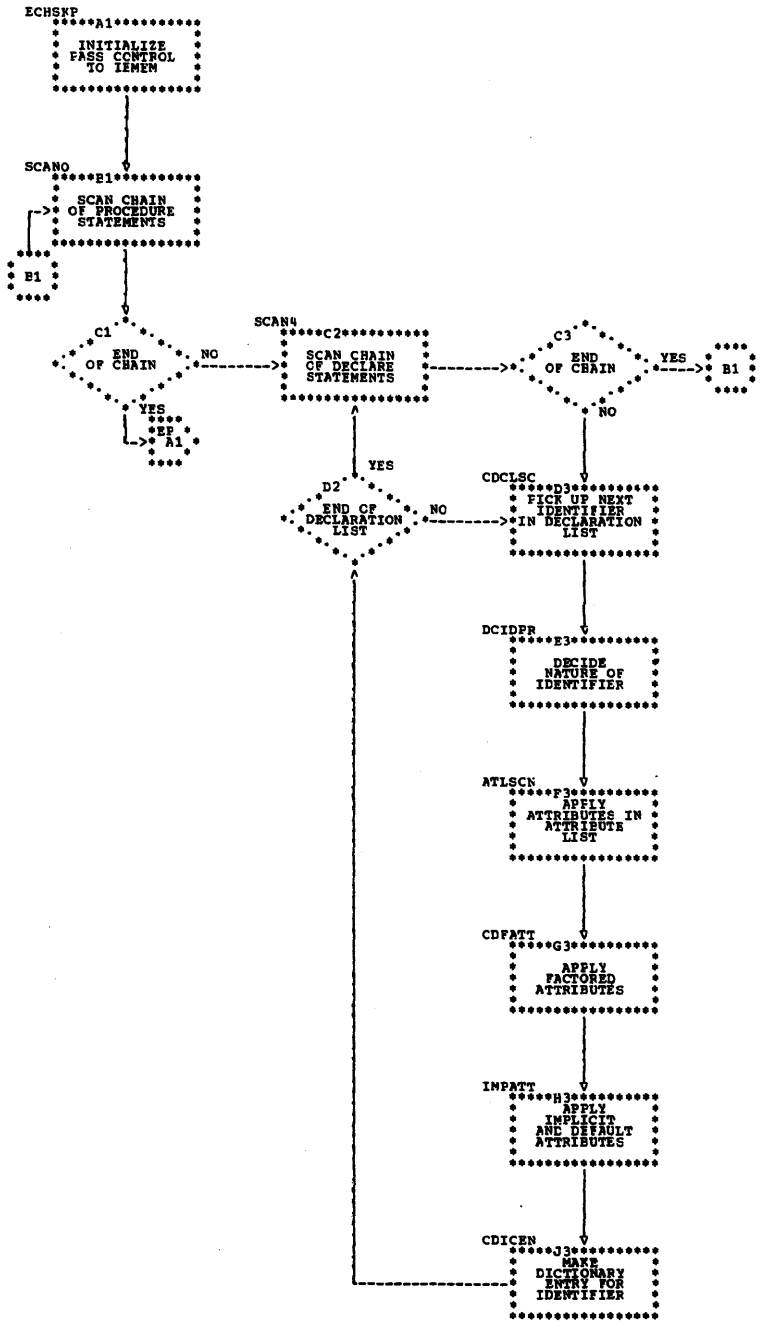

Chart EP. Phase EP Overall Logic Diagram

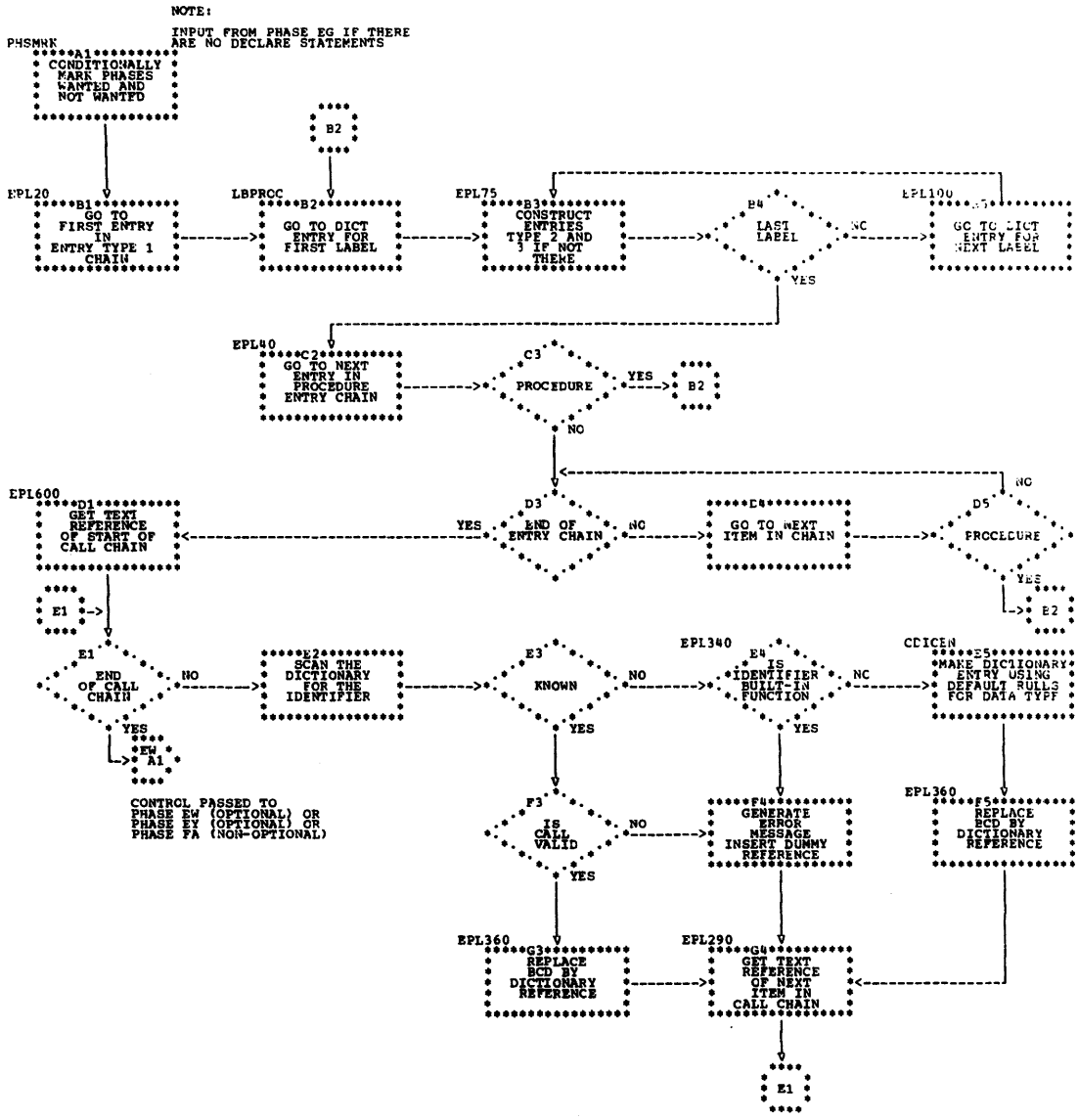

Chart EW. Phase EW Overall Logic Diagram

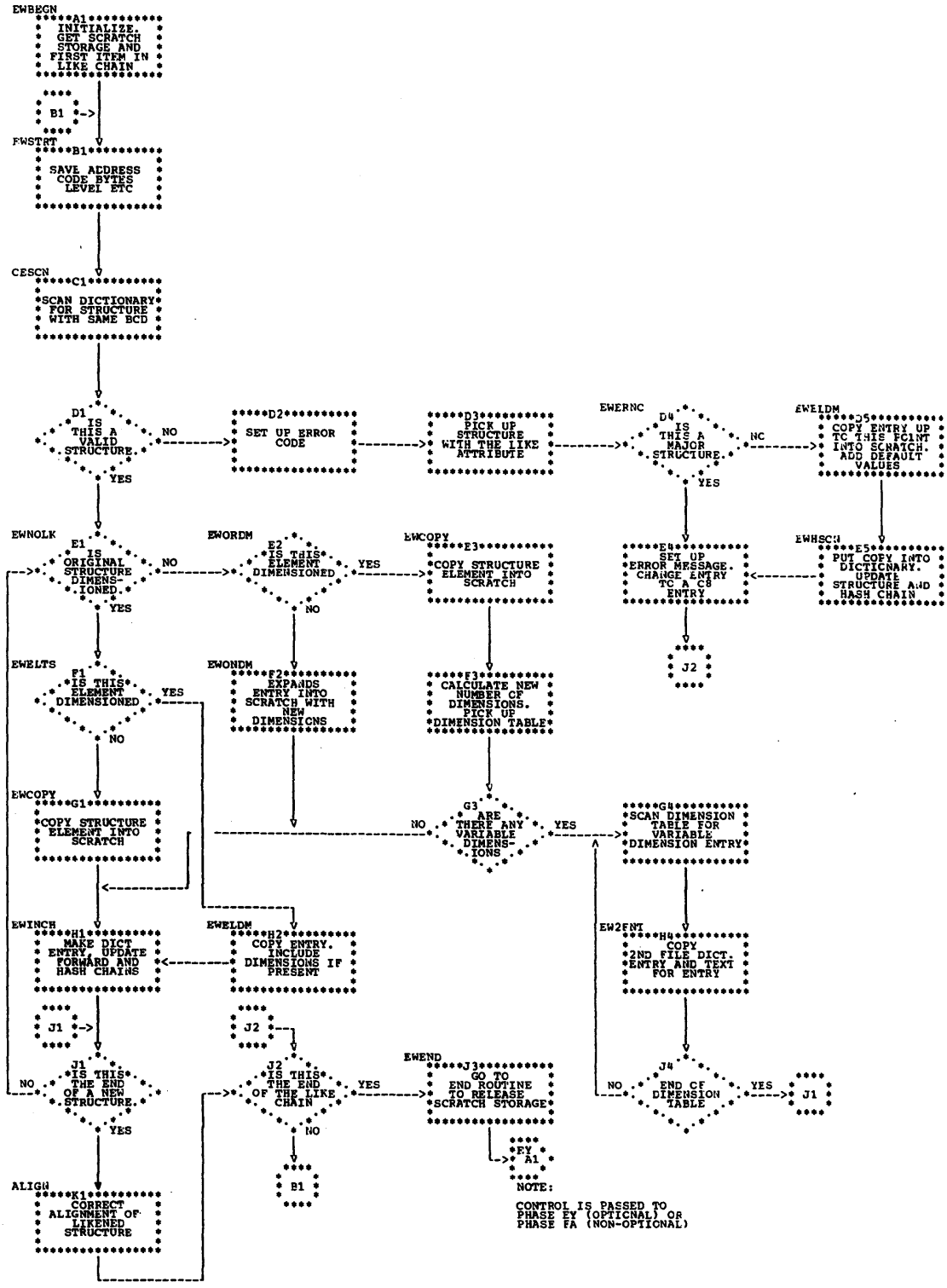

Chart EY. Phase EY Overall Logic Diagram

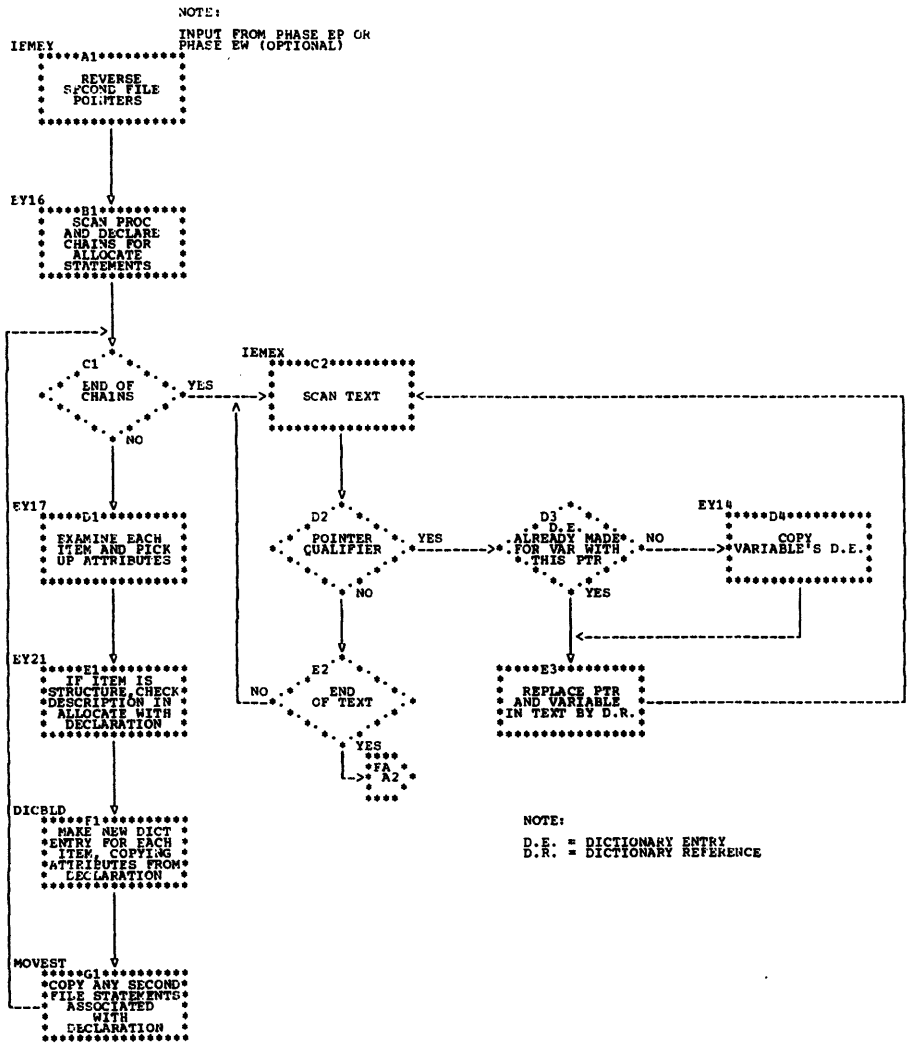

Chart FA. Phase FA Overall Logic Diagram

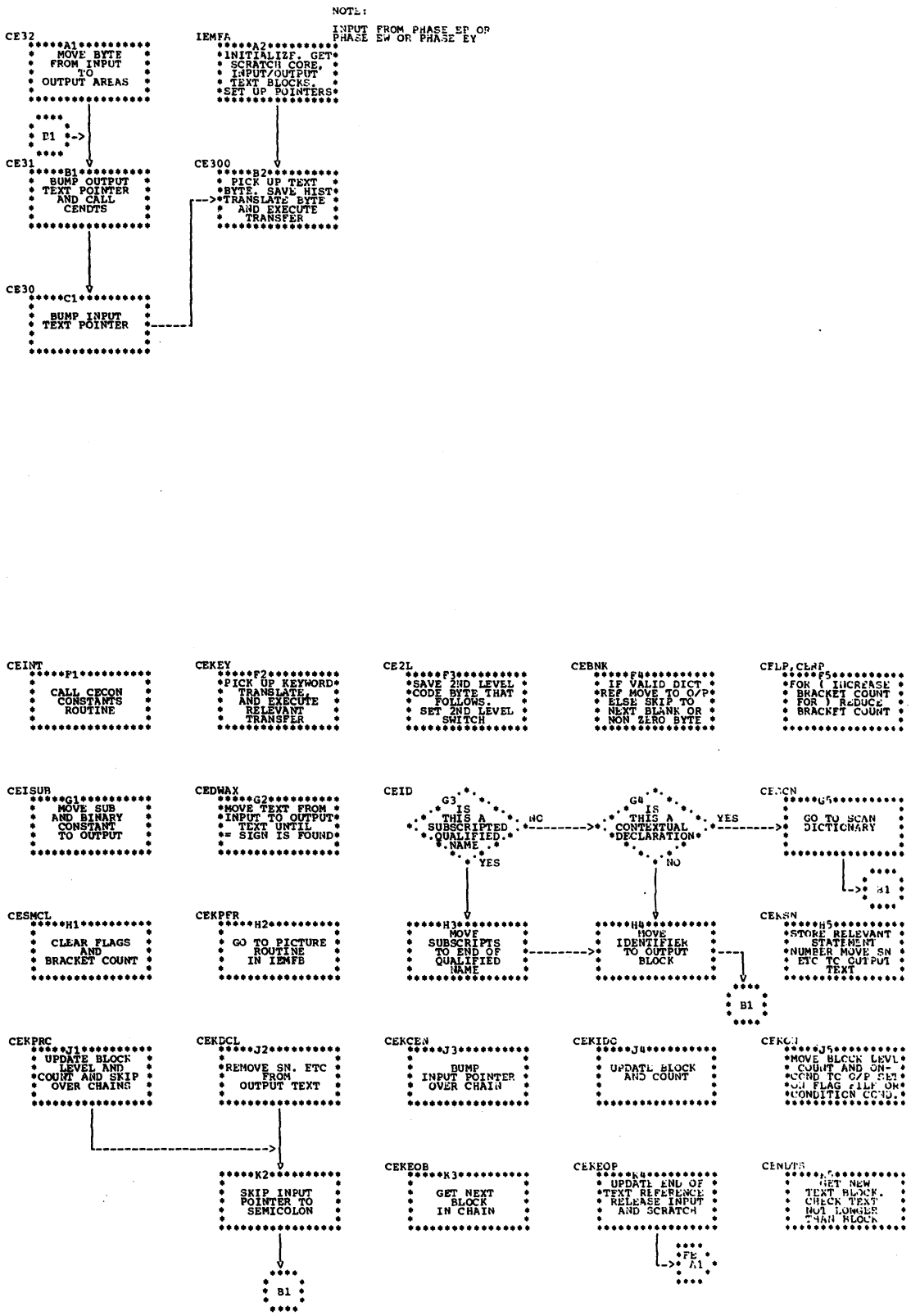

Chart FE. Phase FE Overall Logic Diagram

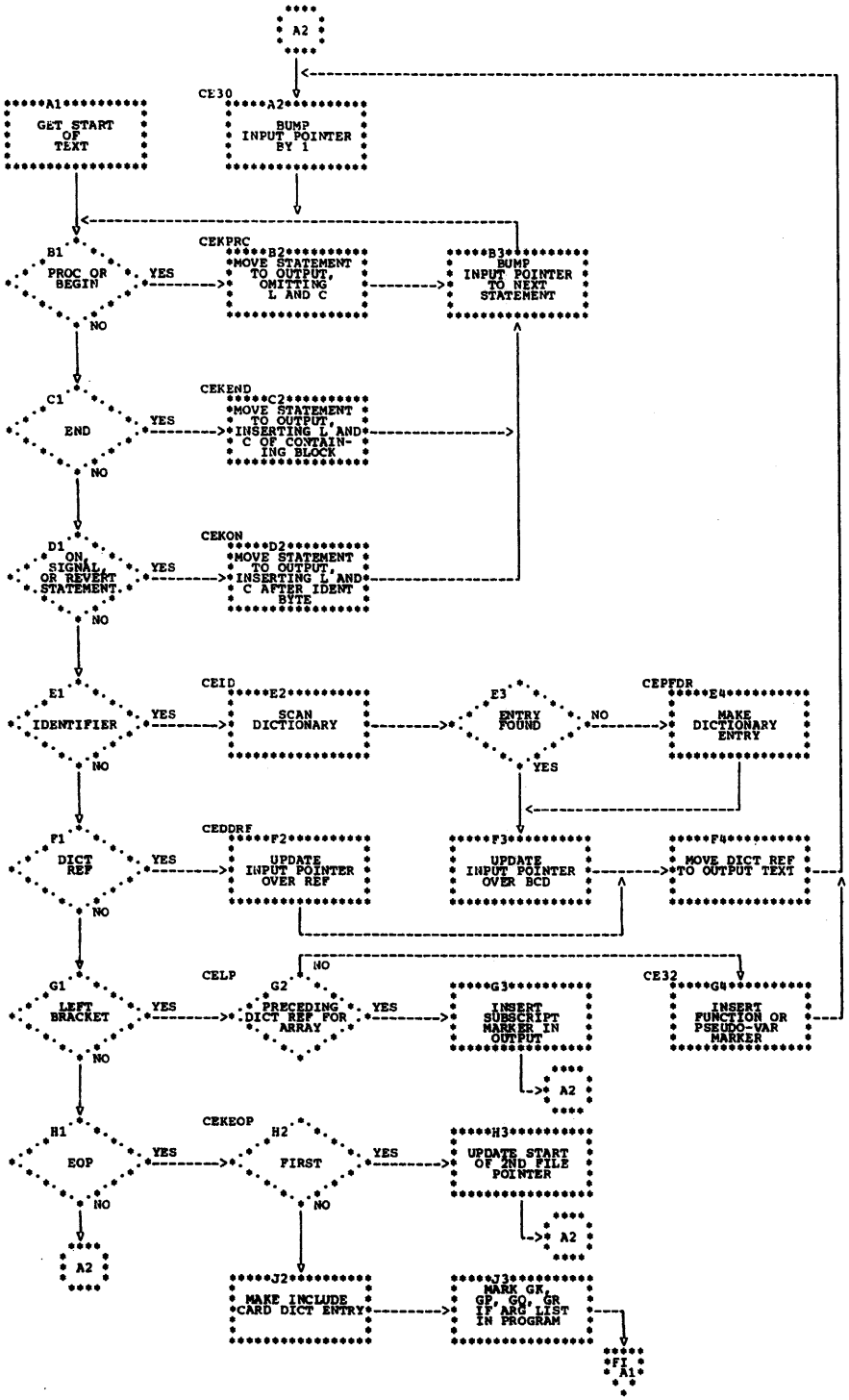

Chart FI. Phase FI Overall Logic Diagram

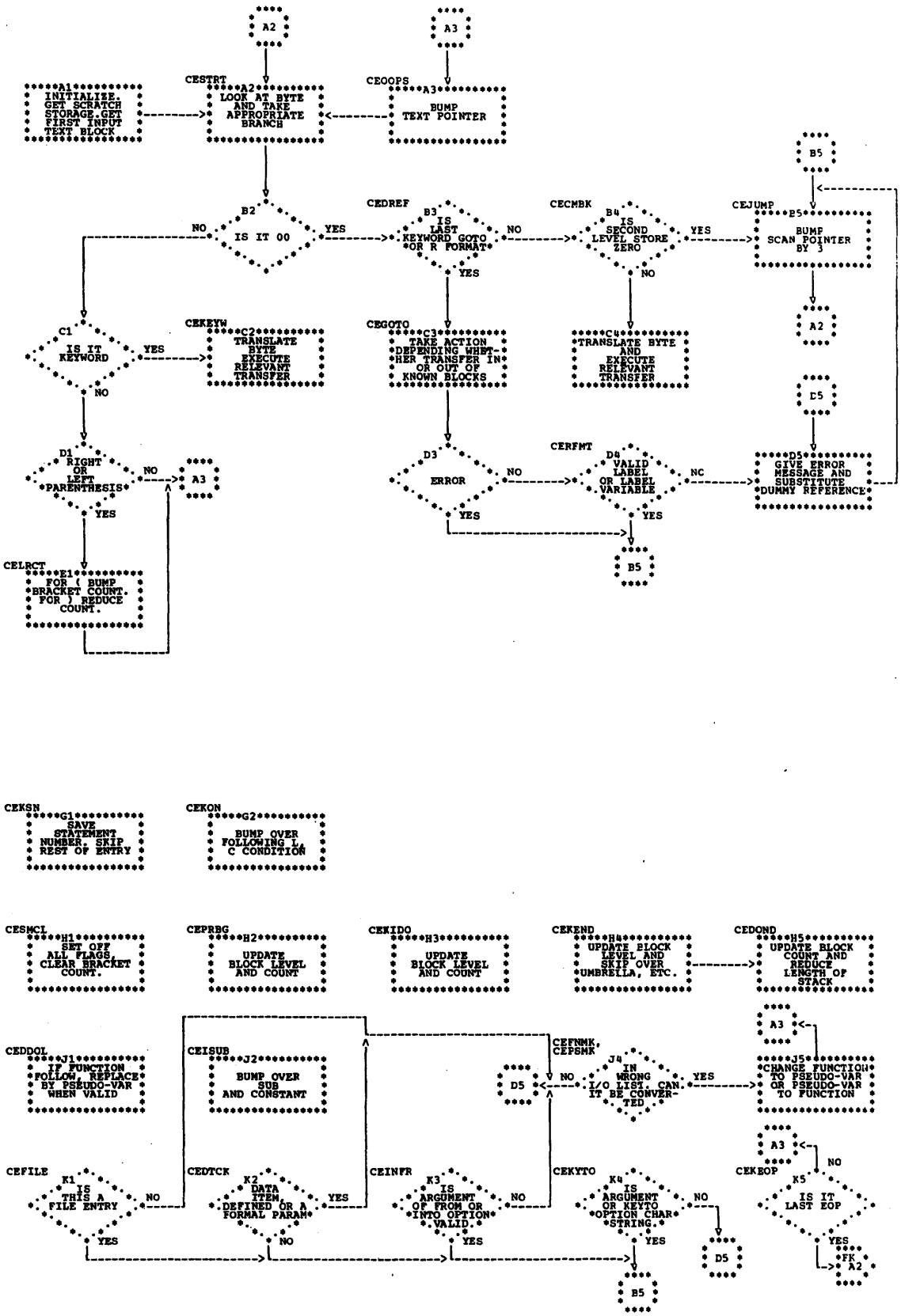

Chart FK. Phase FK Overall Logic Diagram

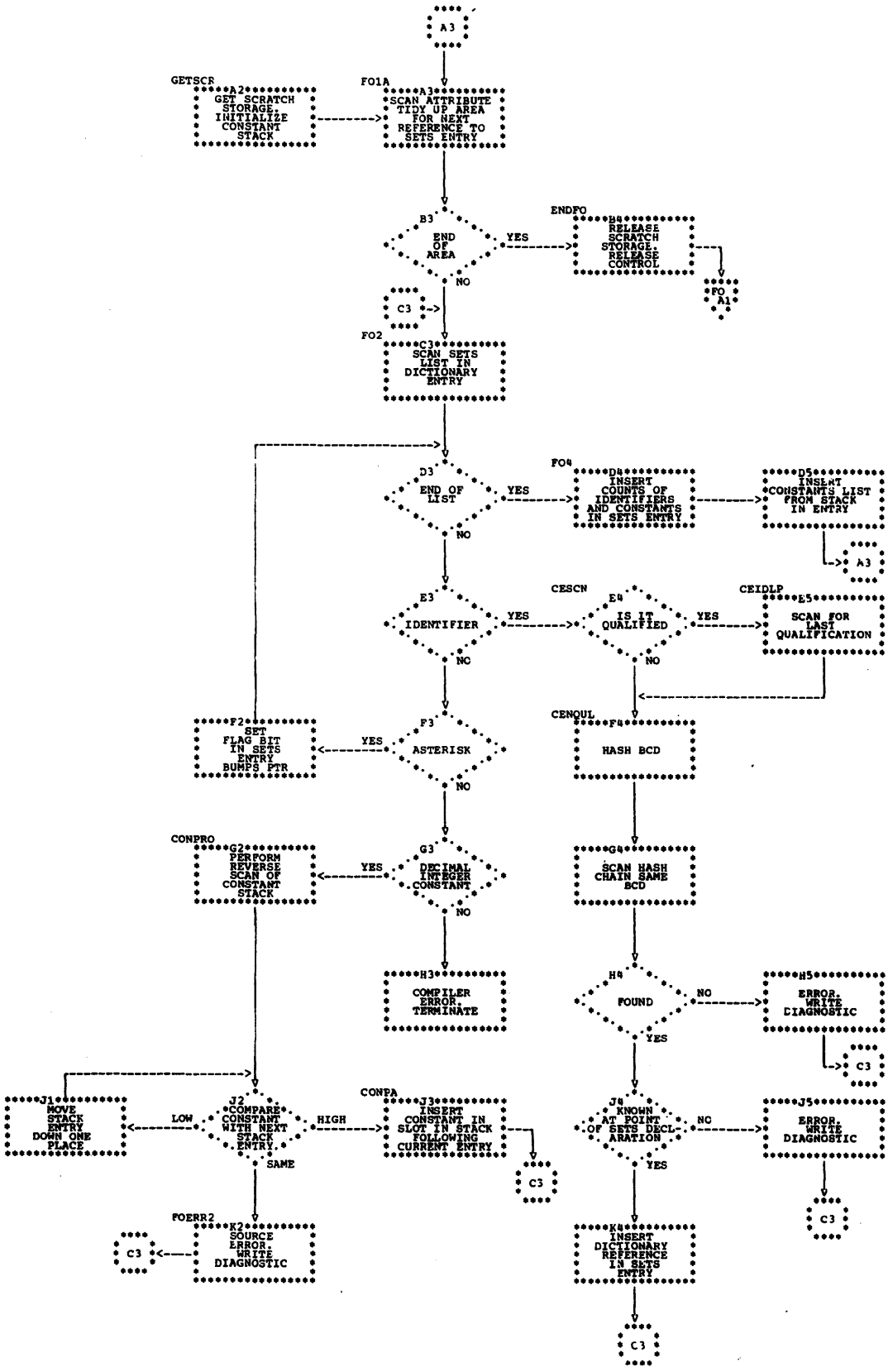

Chart FO. Phase FO Overall Logic Diagram

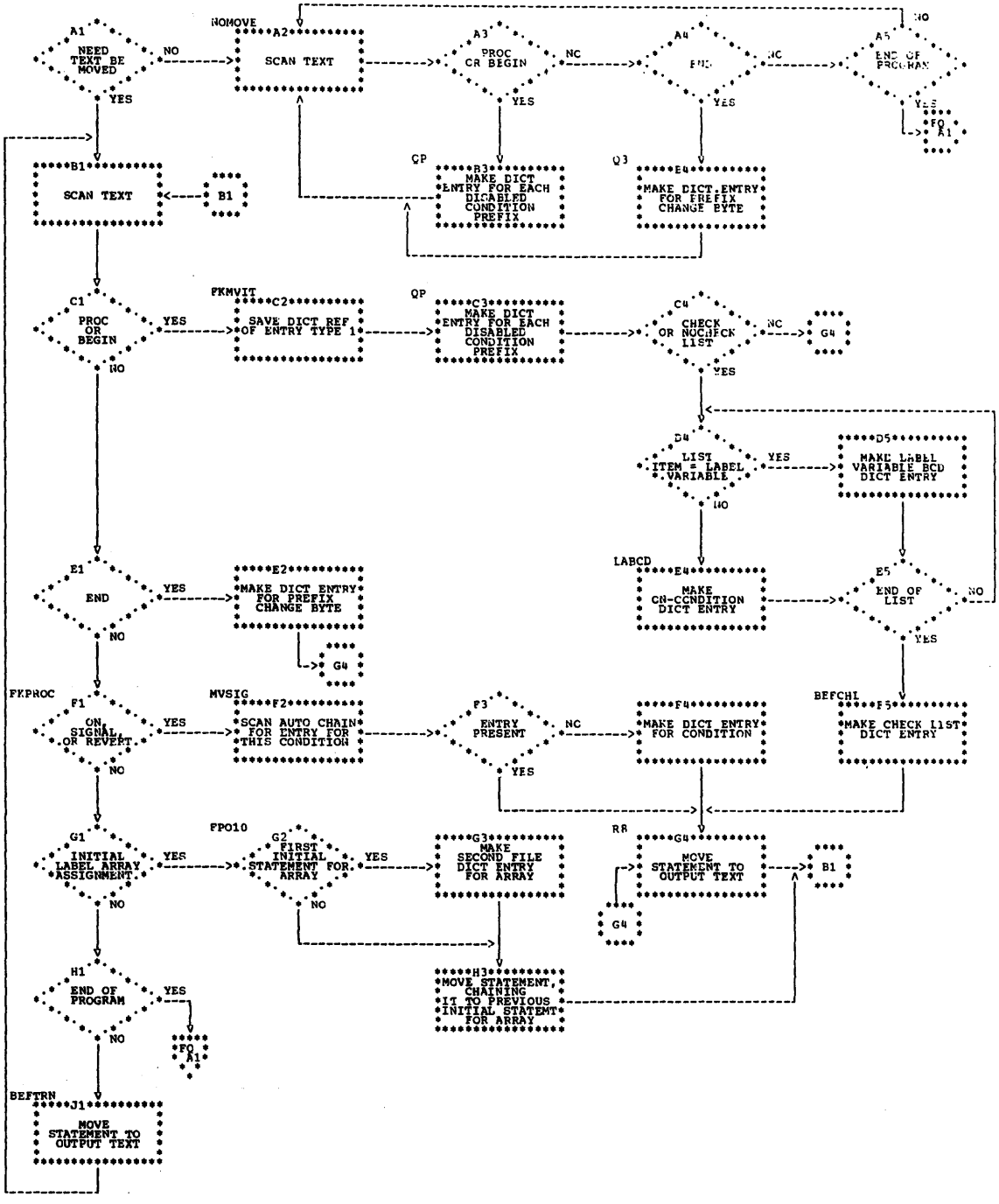

● Chart FQ. Phase FQ Overall Logic Diagram

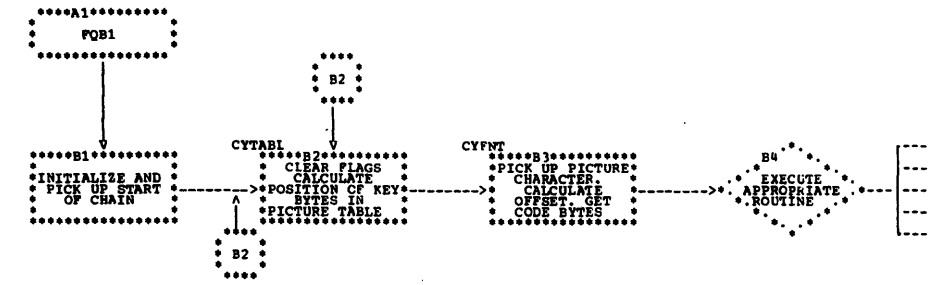

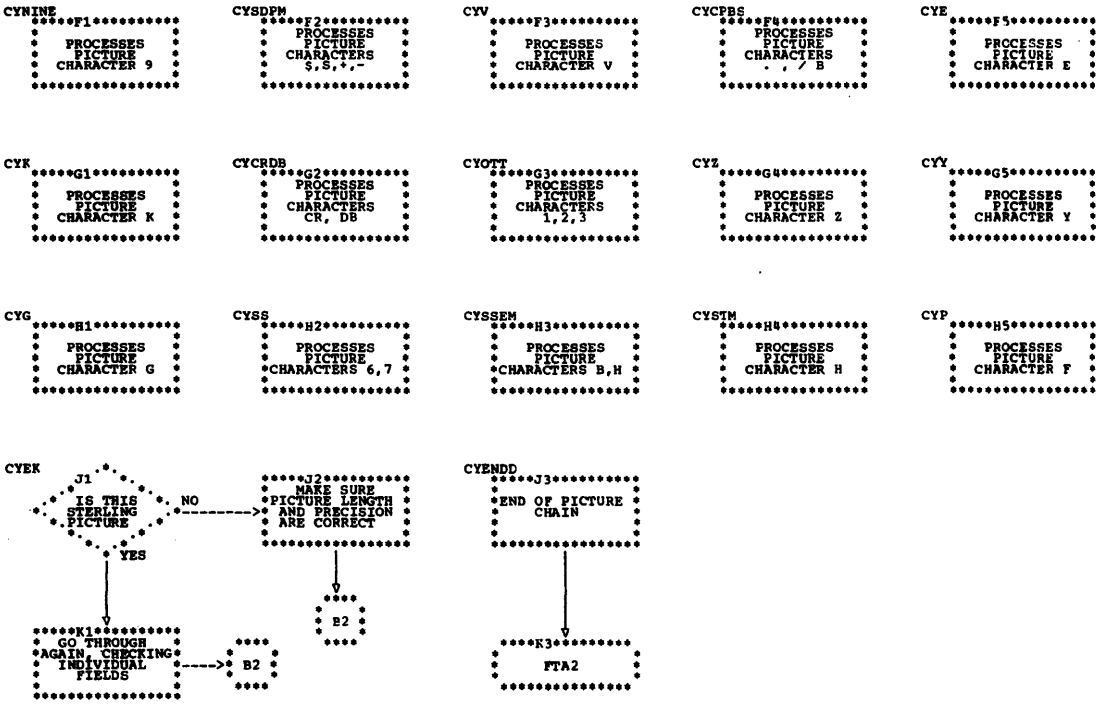

Chart FT. Phase FT Overall Logic Diagram

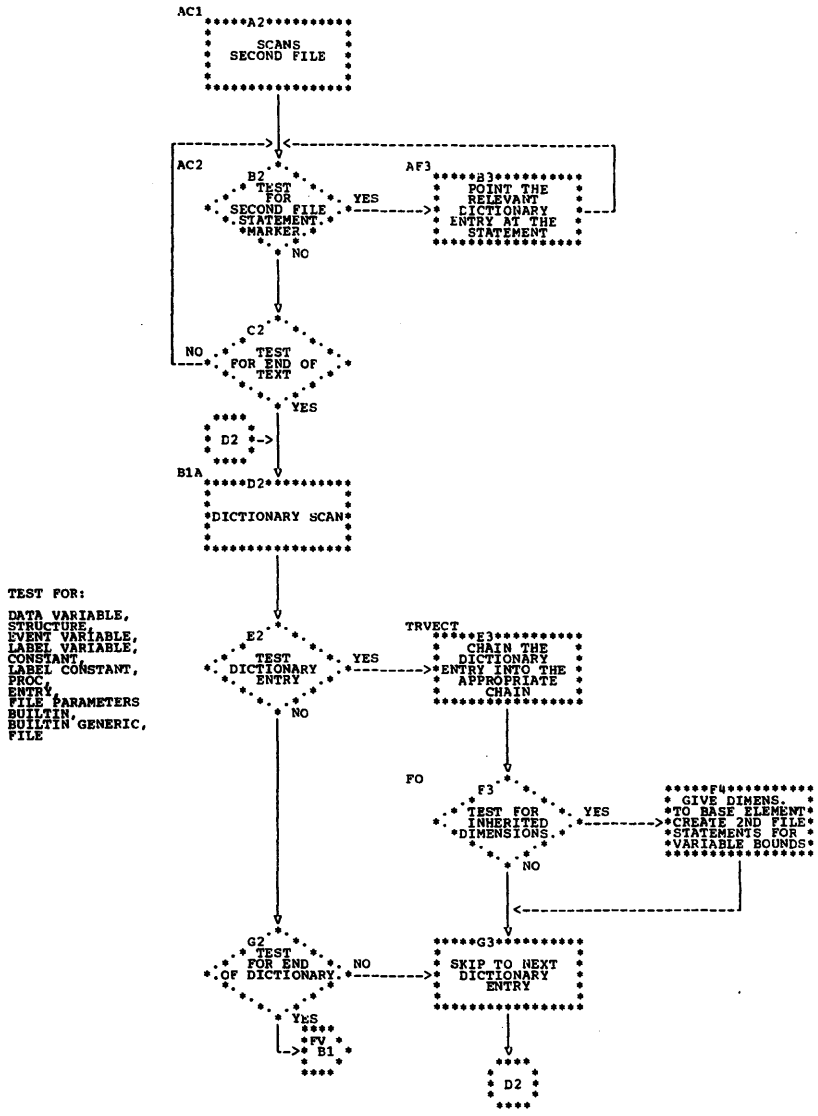

Chart FV. Phase FV Overall Logic Diagram

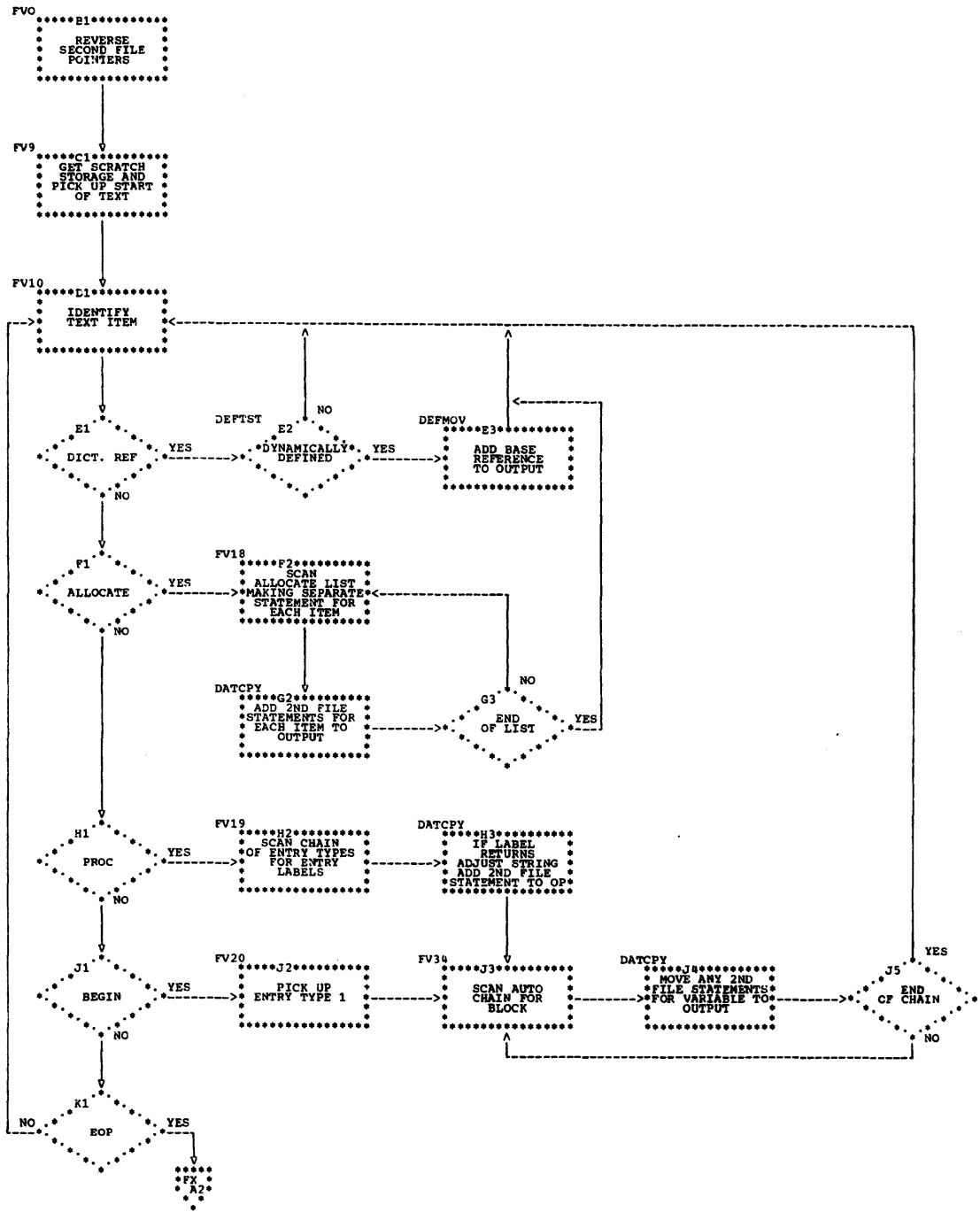

Chart FX. Phase FX Overall Logic Diagram

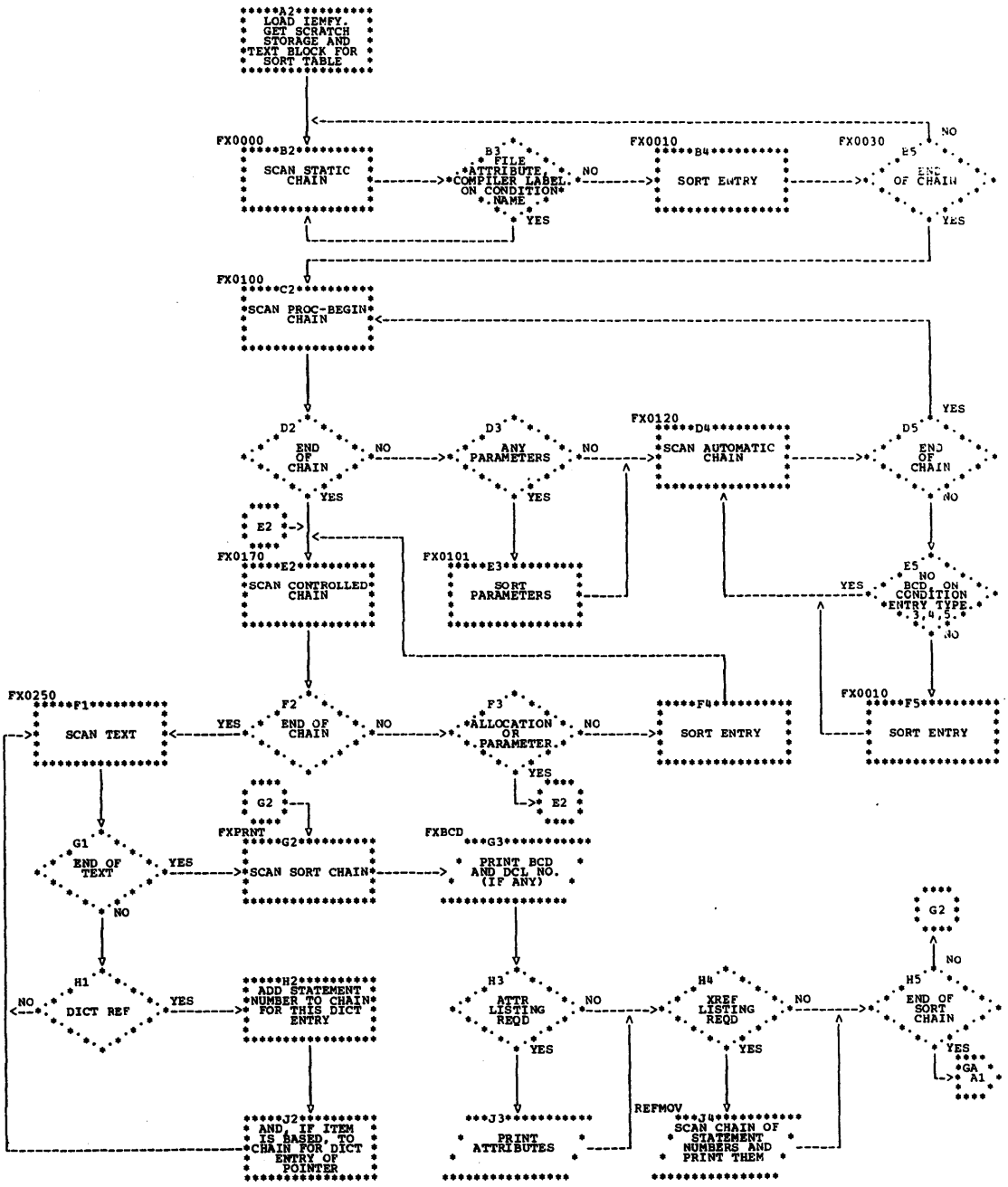

Table ED. Phase ED, Initialization

Statement or Operation Type	Main Processing Routine	Subroutines Used
Sets up routines in scratch storage for phase EL	SETUP	None

Table ED1. Phase ED Routine/Subroutine Directory

Routine/Subroutine	Function
EVENT TASK CELL BASED POINTER OFFSET	Routines for processing declared attributes. These set up information in the attribute collection area of scratch core, for reference by CDICEN, etc., in phase EL.

Table EG. Phase EG Dictionary Initialization

Statement or Operation Type	Main Processing Routine	Subroutines Used
Hashes labels	CAA1	CHASH, CBCDL2
PROCEDURE-BEGIN chain	CA7	None
BEGIN	CA8A	None
PROCEDURE	CAPROC	CANATP, CFORP
ENTRY	CA10	CANATP, CFORP
Formal parameters	CFORP	CHASH, CBCDL2
Attribute list	CANATP	CAPRE1, CATCHA, CATBIT, CATPIC
Creates entry type 2 entries for labels	CTYPBL	ENT2F, CDEFAT

• Table EG1. Phase EG Routine/Subroutine Directory

Routine/Subroutine	Function
CAA1	Scans label table and hashes labels.
CANATP	Processes attribute list.
CAPROC	Processes PROCEDURE statements.
CAPRE1	Processes precision data.
CATBIT	Processes BIT attribute.
CATCHA	Processes CHARACTER attribute.
CATPIC	Processes PICTURE attribute.
CA6	Scans the PROCEDURE-BEGIN chain for the relevant statements, and sets bits in Dictionary entries for optimization options on PROCEDURE and BEGIN statements.
CA8A	Processes BEGIN statements.
CA10	Processes ENTRY statements.
CBCDL2	Traverses the hash chain looking for entries with the same BCD as that just found.
CDEFAT	Completes data byte for entry type 2 entries by default rules.
CFORP	Processes formal parameter lists.
CHASH	Obtains an address in the hash table for an identifier.
CTYPBL	Creates entry type 2 entries for labels.
ENT2F	Creates or copies second file statements.
TYPW	Scans ENTRY chain.
OPTN1 (EF)	Checks containing block options, for inheritance.
OPTN2 (EF)	Processes procedure options.
OPTN3 (EF)	Performs post processing, makes STATIC DSA decisions.
ATTRBT (EF)	Processes POINTER, OFFSET, and AREA attributes.

Table EI. Phase EI Dictionary Declare Pass One

Statement or Operation	Main Processing Routine	Subroutines Used
Scans DECLARE statement	CCGS0	None
Scans text	CCGS2	None
Processes structure level	CCGSCM	None
Factored attribute, left parenthesis	CCFLP	CFPMCR
Factored attribute, right parenthesis	CCFRP	None
Data following DEFINED attribute	CCDEF	NEWBLK, CTXTRM
POSITION	POSIT	None
CHARACTER, BIT	CHABIT	CTXTRM
PICTURE	CATPIC	None
LIKE	LIKE	None
KEY	KEYED	None
Dimension	CDDIMS	CTXTRM, AST, TOMENE, ERRORB
Precision	CDPREC	ERRNEG, SCLBIG
INITIAL	EJINIT	CECON, EHINIT
INITIAL CALL	INCALL	CTXTRM
OFFSET	OFFSET	CTXTRM
BASED	BASED	PTVEXP
AREA	AREA	CTXTRM

Table EI1. Phase EI Routine/Subroutine Directory

Routine/Subroutine	Function
AREA	Processes AREA attributes.
AST	Deals with the case of* dimension bounds mixed with non -* bounds.
BASED (EH)	Entry point in OFFSET routine, at which second file statement is made.
CATPIC	Processes PICTURE attributes.
CCDEF	Processes data following DEFINED attribute.
CCFLP	Processes factored attributes (left parenthesis).
CCFRP	Processes factored attributes (right parenthesis).
CCGSCM	Processes structure level.
CCGSAT	Attribute routine selector.
CCGSE	Scans DECLARE chain.
CCGS00	Scans text.
CCGS2	Scans source text.
CDDIMS (EJ)	Processes dimension attributes.
CDPREC (EJ)	Processes precision attributes.
CECON (EH)	Makes a dictionary entry for a constant unless one has already been made. Returns the dictionary reference of the constant entry.
CFPMCR	Obtains more storage for the factored attribute table.
CHABIT	Processes CHARACTER and BIT attributes.
CSGS00	Detects end of DECLARE chain.
CTXTRM	Tests for space in current text block and obtains new block if necessary.
EHINIT (EH)	Processes the INITIAL attribute except for the initialization of label variables and INITIAL CALL.
EJINIT (EJ)	Processes INITIAL attribute and LABEL with a label-constant list.
ERRNEG	Deals with the case of a negative precision specification.
ERRORB	Deals with the case of lower dimension bound declared greater than the upper bound.

Table EI1. Phase EI Routine/Subroutine Directory (cont'd)

Routine/Subroutine	Function
GENTRY	Keeps a count of parentheses in GENERIC and ENTRY processing.
INCALL (EJ)	Processes INITIAL CALL attributes.
IVROOM (EH)	Checks if there is space in scratch storage for another entry. If not, it makes a dictionary entry and chains it to the previous one or to the C8 in text as required.
IVPUTL (EH)	Places a dictionary reference in the 'initial list' for a label constant. If the constant is not known, a dummy reference is inserted.
IVPUTC (EH)	Places a dictionary reference in tne 'initial list' for a constant.
IVPUT0 (EH)	Places the dictionary reference of zero in the 'initial list' for a negative or imaginary replication factor.
KEYED	Processes KEY attributes.
LIKE	Processes LIKE attributes.
NEWBLK	Obtains new text block.
OFFSET (EH)	Processes OFFSET attributes.
POSIT	Processes POSITION attributes.
PTVEXP (EH)	Entry point in OFFSET routine, at which secondfile statement is made.
SCLBIG	Deals with the case when a precision specification for fixed-point data is declared too large.
SECON	Creates a dictionary entry for a constant provided the appropriate entry has not been already made.
SETS	Processes USES and SETS attributes.
TOMENE	Deals with the case when the number of dimensions declared is greater than 32.

Table EL. Phase EL Dictionary Declare Pass Two

Statement or Operation Type	Main Processing Routine	Subroutines Used
Scans chain of DECLARE statements	CGENSC	CDCLSC
Scans each item of DECLARE statement	CDCLSC	ATLSCN, BCDPR, CDFLT, CDICEN, CDIMAT, DCIDPR, INTLZE, POSTPR, SELMSK, STRPR
Initializes each identifier declared	INTLZE	DCIDPR
Processes factor brackets and level numbers	DCIDPR	TEMSCN, BCDPR
Scans for next level number	TEMSCN	CDATPR
Processes BCD of identifier	BCDPR	BCDISB, CHASH, SELMSK
Hashes BCD of identifier	CHASH	None
Scans list of attributes following identifier	ATLSCN	CDATPR
Applies factored attributes	CDFATT	CDATPR
Applies implicit attribute	IMPATT	None
Attributes controlling routine	CDATPR	CDAT40, CDAT41, CDAT42, CDAT43, CDAT44, CDAT45, CDAT48, CDAT49, CDAT4A, CDAT4B, CDAT4C, CDAT4D, CDAT4F, CDAT54, CDAT55, CDAT56, CDAT57, CDAT58, CDAT59, CDAT60, CDAT61, CDAT62, CDAT63, CDAT64, CDAT69, CDAT6A, CDATB4, CDATB8

Table EL1. Phase EL Routine/Subroutine Directory

Routine/Subroutine	Function
ATLSCN	Scans the list of attributes following the identifier.
BCDISB	Checks for multiple declarations, etc.
BCDPR	Processes BCD of identifier.
CDATPR (EK)	Attribute controlling routine.
CDAT40 (EK)	Processes DECIMAL attribute.
CDAT41 (EK)	Processes BINARY attribute.
CDAT42 (EK)	Processes FLOAT attribute.
CDAT43 (EK)	Processes FIXED attribute.
CDAT44 (EK)	Processes REAL attribute.
CDAT45 (EK)	Processes COMPLEX attribute.
CDAT46 (EK)	Processes precision attributes.
CDAT48 (EK)	Processes VARYING attribute.
CDAT49 (EK)	Processes PICTURE attribute.
CDAT4A (EK)	Processes BIT attribute.
CDAT4B (EK)	Processes CHARACTER attribute.
CDAT4C (EK)	Processes FIXED DIMENSIONS attribute.
CDAT4D (EK)	Processes LABEL attribute.
CDAT4F (EK)	Processes ADJUSTABLE DIMENSIONS attribute.
CDAT58 (EK)	Processes ENTRY attribute.
CDAT59 (EK)	Processes GENERIC attribute.
CDAT5A (EK)	Processes BUILT-IN attribute.
CDAT60 (EK)	Processes EXTERNAL attribute.
CDAT61 (EK)	Processes INTERNAL attribute.
CDAT62 (EK)	Processes AUTOMATIC attribute.
CDAT63 (EK)	Processes STATIC attribute.
CDAT64 (EK)	Processes CONTROLLED attribute.
CDAT69 (EK)	Processes INITIAL attribute.
CDAT6A (EK)	Processes LIKE attribute.

Table EL1. Phase EL Routine/Subroutine Directory (cont'd)

Routine/Subroutine	Function
CDAT6B (EK)	Processes DEFINED ATTRIBUTE.
CDAT6C (EK)	Processes ALIGNED attributes.
CDAT6D (EK)	Processes UNALIGNED attribute.
CDAT70 (EK)	Processes AREA attribute.
CDAT88 (EK)	Processes POS attribute.
CDCLSC	Scans each item of DECLARE statement.
CDFATT (EM)	Applies factored attributes.
CDFLT (EM)	Applies default attributes.
CDICEN (EM)	Constructs dictionary entry.
CGENSC (EM)	Performs phase initialization and scans chain of DECLARE statements.
CHASH (EM)	Hashes BCD of identifier.
DCID1	Main scan routine.
DCIDPR	Processes factor brackets and level numbers.
ECHSKP (EK)	Initializes and passes control to Module EM.
IMPATT (EM)	Applies implicit attributes.
INTLZE	Performs initialization for each identifier declared.
POSTPR	Post-processor.
SCAN4 (EM)	Scans chain of DECLARE statements.
SELMSK	Selects correct test mask to be initialized.
STRPR	Processes inheriting of dimensions in structures.
TEMSCN	Scans ahead for next level number.

Table EP. Phase EP Dictionary Entry III and Call

Statement or Operation Type	Main Processing Routine	Subroutines Used
Scans for PROCEDURE entries type 1	ENTRY3	None
Follows chain of ENTRY statement entry type 1 entries from a PROCEDURE entry type 1	EPL40	None
Examines all labels belonging to an entry type 1, constructing an entry type 2 or 3, if necessary	LBPROC	None
Follows CALL chain in text making dictionary entries for entry points	EPL290	None
Examines the first character of an identifier and sets a flag indicating the range in which it lies	CDIMAT	None
Applies default rules	CDFLT	None
Given an identifier calculates its offset in the hash table	CHASH	None
Constructs a dictionary entry	CDICEN	None
Sets address slot to zero or the end of the dictionary	FNDEND	None
Constructs list of numbers of known blocks	BLDST2	None
Built in function name	SCANBF	None

Table EP1. Phase EP Routine/Subroutine Directory

Routine/Subroutine	Function
BLDST2	Constructs list of numbers of known blocks.
CDICEN	Constructs dictionary entry.
CDIMAT	Sets flag for default routine.
CDFLT	Applies default rules.
CHASH	Calculates offset in hash table for given BCD.
ENTRY3	Scans ENTRY chain for PROCEDURE statements.
EPL20	First entry in entry type 1 chain.
EPL40	Scans ENTRY chain for ENTRY statements type 1.
EPL75	Return point from LBPROC routine.
EPL100	Processes new entry label.
EPL290	Scans CALL chain.
EPL340	Searches built-in function table for BCD of identifier.
EPL360	Blanks out BCD in text.
EPL600	Scans the CALL chain.
FNDEND	Sets address slot for label.
LBPROC	Processes labels of PROCEDURE or ENTRY statements.
PHSINT	Initialization of phase.
PHSMRK	Marks later modules as 'wanted' or 'not wanted'.
SCANBF	Checks for built-in function name.

Table EW. Phase EW Dictionary LIKE

Statement or Operation Type	Main Processing Routine	Subroutines Used
Scans LIKE chain	EWBEGN	EWCOPY, EWELDM, EWINCH, EWONDM
Updates hash chain for new entry	EWHSCN	None
Calculates start of structure data from start of variable information	EWVART	None
Changes error entry to base element	EWCHEN	None
Copies dimension table entry and second file statement	EW2FNT	EWNWBK

Table EW1. Phase EW Routine/Subroutine Directory

Routine/Subroutine	Function
ALIGN (EV)	Provides correct alignment of base elements in likened structure.
BASED (EV)	Inserts or deletes defined slot, where only one structure is based.
CESCN	Scans dictionary to find entry corresponding to BCD in text.
EWBEGN	Scans LIKE chain.
EWCHEN	Changes error entry to base element.
EWCOPY	Copies dictionary entry into scratch storage.
EWDCCY (EV)	Copies initial dictionary entries and associated second file statements, etc.
EWELDM	Copies entry into scratch storage with dimension data removed.
EWELTS	Tests whether the likened structure is dimensioned.
EWEND	Handles transfer of control to next phase.
EWERNC	Processes erroneously "likened" major structure.
EWHSCN	Updates hash chain for new entry.
EWINCH	Completes entry copy and places it in dictionary.
EWNOLK	Tests whether original structure is dimensioned.
EWNWBK (EV)	Obtains new dictionary block and terminates current one in use.
EWONDM	Copies entry into scratch storage, inserting dimension information.
EWORDM	Processes dimension information in original structure.
EWSTRT	Tests validity of likened structure.
EW2FNT (EV)	Copies second file statement and associated dictionary reference.

Table EY. Phase EY Dictionary ALLOCATE

Statement or Operation Type	Main Processing Routine	Subroutines Used
Scans text for explicitly pointer-qualified based variables	IEMEX	EY14
Copies dictionary entries for explicitly qualified based variables	EY14	HASH, ATPROC, DICBLD, STRCPY
Second file pointers. Scans ALLOCATE statements	IEMEY	ATPROC, DICBLD, HASH, STRCPY
Completes copied dictionary entry for an allocated item	ATPROC with second entry point ATPROD	MOVEST
Controls ATPROC and ATPROD routines for each member of a structure	STRCPY	ATPROC, ATPROD

Table EY1. Phase EY Routine/Subroutine Directory

Routine/Subroutine	Function
ATPROC/ATPROD (EZ)	Complete copied dictionary entry for allocated item by including attributes from ALLOCATE and second file statements.
DICBLD	Collects attribute given for an identifier and copies its dictionary entry.
EY16	Processes ALLOCATE statements.
EY17	Processes identifier in ALLOCATE statement.
EY21	Processes major structures.
HASH	Hashes BCD of identifier to obtain its dictionary reference.
IEMEX	Scans text for explicitly pointer-qualified variables.
EY14	Copies dictionary entries for explicitly qualified based variables.
IEMEY	Scans second file, reverses pointers. Scans ALLOCATE statements.
MOVEST (EZ)	Copies second file statement and associated dictionary entry.
STRCPY	Controls ATPROC and ATPROD for each member of structure.

Table FA. Phase FA Dictionary Context

Statement or Operation Type	Main Processing Routine	Subroutines Used
Scans text	CE30	CENDTS, CETRAN
Reorders subscripts; makes dictionary entry for file and event variables	CEID	CESCN
Identifies keywords	CEKYWD	CEKEND, CEKEOB, CEKEOP, CEKON, CEKPRC, CEKSND
Scans dictionary	CESCN	CESTUC, CEYES, CFPDER, CFPDR2, CHASH, CE3XX
Makes dictionary entry for variables	CFPDR2	CDFLT, CDICEN, CDIMAT, CEONCK
Scans dictionary entry for constants and makes new entry, if necessary.	CECON	CHASH
Scans PICTURE chain entry and makes new entry, if necessary.	CEPICT	None

Table FA1. Phase FA Routine/Subroutine Directory

Routine/Subroutine	Function
CDFLT	Determines default attributes for identifier.
CDICEN	Constructs default dictionary entry for identifier.
CDIMAT	Determines default scale for identifier.
CEBNK	Transfer point for zero or blank.
CECON (FB)	Scans dictionary entry for constants.
CEDWAX	Subscript prime text marker.
CEID	Reorders subscripts and makes dictionary entries for files and event variables.
CEINT	Transfer point for constant routine.
CEISUB	Transfer point for iSUB.
CEKCEN	Transfer point for CALL to get over chain.
CEKDCL	Removes SN from DECLARE statements.
CEKEND	Processes END keyword.
CEKEOB	Processes end-of-block marker.
CEKEOP	Handles end-of-program marker, or start of second file.
CEKEY	Transfer point for keyword.
CEKIDO	Transfer point for iterative DO.
CEKON	Processes ON keyword.
CEKPFR	Transfer point for picture format item.
CEKPRC	Processes PROCEDURE keyword.
CEKSN	Moves SN, etc., to output stream.
CEKSND	Processes start of second file statement.
CEKYWD	Identifies keywords.
CELP	Transfer point for left parenthesis.
CENDTS	End of text block in output file routine.
CEONCK	Makes entry for programmer-named ON condition.
CEPFDR	Makes dictionary entry for variables.
CEPICT (FB)	Scans picture chain entry.
CERP	Transfer point for right parenthesis.
CESCN	Scans dictionary.
CESMCL	Handles semicolon.
CESTUC	Points at next entry in structure chain.

Table FA1. Phase FA Routine/Subroutine Directory (cont'd)

Routine/Subroutine	Function
CETRAN	Translates keyword into transfer instruction.
CEYES	Compares structure levels.
CE2L	Transfer point for second level marker.
CE30	Controlling scan of text.
CE31	Tests for end of block.
CE32	Moves one byte to output stream.
CE300	Switches to appropriate routine.
CE3XX	Compares identifier in text with entry in dictionary.
CFPDER (FB)	Makes dictionary entry for ordinary identifier.
CFPDR2 (FB)	Makes dictionary for formal parameter.
CHASH	Hashes identifier.
CHASHC	Hashes constant.
IEMFA	Initializes phase.

Table FE. Phase FE Dictionary BCD to Dictionary Reference

Statement or Operation Type	Main Processing Routine	Subroutines Used
Scans text	CE30	CENDTS, CETRAN
Scans dictionary	CESCN	CESTUC, CEYES, CFPDER, CFPDR2, CHASH, CE3XX
Checks for array, function, or pseudo-variable if left parenthesis is found	CELP	CEFNCT
Tests for end of text block	CENDTS	CEKEND, CEKIDO, CEKPRC
Identifies keywords	CEKYWD	CEKEOB, CEKEOP
Makes dictionary entry	None	CDFLT, CDICEN, CDIMAT

Table FE1. Phase FE Routine/Subroutine Directory

Routine/Subroutine	Function
CDFLT	Applies default rules.
CDICEN	Constructs dictionary entry.
CDIMAT	Sets flag for default routine.
CEFNCT	Tests validity of function reference in text.
CEKEND	Processes END keyword.
CEKEOB	Processes end-of-block marker.
CEKEOP	Processes end-of-program marker, or start of second file.
CEKIDO	Processes iterative DO keyword.
CEKPRC	Processes PROCEDURE keyword.
CEKYWD	Identifies keyword.
CELP	Checks for array, function, or pseudo-variable if left parenthesis is found.
CENDTS	Tests for end of text block in output file.
CESCN	Scans dictionary.
CESTUC	Points at next entry in structure chain.
CETRAN	Translates keyword into transfer instruction
CEYES	Compares structure levels.
CE30	Controlling scan of text.
CE3XX	Compares identifier in text with dictionary entry.
CFDICN (FF)	Makes dictionary entry.
CFPDER	Makes dictionary entry for statement with ordinary identifiers.
CFPDR2	Makes dictionary entry for formal parameters.
CHASH	Calculates offset in hash table for given BCD.

Table FI. Phase FI Dictionary Checking

Statement or Operation Type	Main Processing Routine	Subroutines Used
Scans text	CESTRT	CEKEYW
Identifies keywords	CEKEYW	CEKEOB, CEKEOP, CEKIDO, CEKSN
Checks GOTO statement references	CEGOTO	None
Converts GOTO to GOOB, if necessary	CEGOB	None
Checks file references	CEFILE	None
Checks data list items for validity	CEDTCK	None

Table FI1. Phase FI Routine/Subroutine Directory

Routine/Subroutine	Function
CECMBK	Tests value of previous second level marker.
CEDDOL	Processes function names used as control variables for DO groups.
CEDOND	Processes end of iterative DO groups.
CEDREF	Tests whether dictionary reference needs to be checked.
CEDTCK	Checks data list items for validity.
CEFILE	Checks file references.
CEFNMK	Processes function markers.
CEGOB	Converts GOTO to GOOB, if necessary.
CEGOTO	Checks GOTO statement references.
CEISUB	Processes iSUBs.
CEJUMP	Bumps scan pointer over dictionary reference.
CEKEND	Processes END statements.
CEKEOB	Processes end-of-block marker.
CEKEOP	Processes end-of-program marker.
CEKEYW	Identifies keywords.
CEKIDO	Processes iterative DO keyword.
CEKON	Processes ON statements.
CEKSN	Processes statement number.
CELRCT/CERPCT	Process left and right parentheses.
CEOOPS	Checks validity of keywords in the text.
CEPRBG	Processes PROCEDURE and BEGIN statements.
CERFMT	Processes remote format references.
CESMCL	Processes semicolons.
CESTRT	Controlling scan of text.

Table FK. Phase FK Dictionary Attribute

Statement or Operation Type	Main Processing Routine	Subroutines Used
Scans attributes area for SETS lists	FO1A	None
Scans SETS list	FO2	None
Processes constants	CONPRO	None
Processes identifiers	CESCN	CESTUC, CE3XX, CHASH

Table FK1. Phase FK Routine/Subroutine Directory

Routine/Subroutine	Function
CEIDLP	Scans qualified name.
CENQUL	Processes unqualified name.
CESCN	Processes identifier.
CESTUC	Finds address of next structure in chain.
CE3XX	Compares current BCD with BCD in hash chain.
CHASH	Calculates offset in hash table for given BCD.
CMPERR	Provides termination error action.
CONPA	Inserts constant in ordered stack.
CONPRO	Processes constants.
ENDFO	Releases control.
FOERR2	Diagnoses constant greater than 255.
FO1A	Scans attribute tidy-up area.
FO2	Scans SETS list.
FO4	Completes SETS dictionary entry.
GETSCR	Obtains scratch storage.

Table FO. Phase FO Dictionary ON

Statement or Operation Type	Main Processing Routine	Subroutines Used
Scans input text for ON, SIGNAL, and REVERT statements	FKMVIT	BEFTRN, CENDTS, QP
Moves second file from input text block to output text block	F2	CENDTS, BEFTRN
Makes dictionary entries for ON-conditions found in ON, SIGNAL, and REVERT statements	FKDCEN	LABCD
Examines BCD of file entries referenced in ON, SIGNAL, and REVERT statements; scans previous entries for ON conditions	MVSIG	CENDTS
Processes CHECK and NOCHECK list.	BEFCHL	CENDTS, LABCD
Creates dictionary entries for condition prefixes	NOMOVE	QP

Table FO1. Phase FO Routine/Subroutine Directory

Routine/Subroutine	Function
BEFCHL	Processes CHECK and NOCHECK list.
BEFTRN	Replaces statements containing dummy dictionary references by error statements, and generates error message.
CENDTS	Requests a new text block for output.
FKDCEN	Makes dictionary entries for ON conditions found in ON, SIGNAL, and REVERT statements.
FKMVIT	Scans input text for ON, SIGNAL, and REVERT statements.
FKNOCK	Processes CHECK and NOCHECK lists.
FKPROC	Scans input text for ON, SIGNAL, and REVERT statements.
FP010 (FP)	Chains initial label statements and makes second file dictionary entries for each label array initialized in this way.
F2	Moves second file from input text block to output text block.
LABCD	Creates a dictionary entry for each label constant and each entry label mentioned in a CHECK list.
MVSIG	Examines BCD of file entries referenced in ON, SIGNAL, and REVERT statements; scans previous entries for ON conditions.
NOMOVE (FP)	Creates dictionary entry for condition prefix.
Q3	Processes condition prefixes changed in current block.
QP	Determines which condition prefixes require dictionary entries.
R8	Moves statement to output buffer.

• Table FQ. Phase FQ Dictionary Picture Processor

Statement or Operation Type	Main Processing Routine	Subroutines Used
Controls scan of PICTURE chain; initializes	CYBR3	CYEK, CYFIND, CYTABL
Picture character 9	CYNINE	None
Picture characters S, $, +, -.	CYSDPM	None
Picture character V	CYV	None
Picture character E	CYE	CYC21
Picture character K	CYK	CYC21
Picture characters CR, DB	CYCRDB	None
Picture characters 1,2,3	CYOTT	None
Picture character P	CYP	None
Picture character Z	CYZ	None
Picture character *	CYAST	None
Picture character Y	CYY	None
Picture character G	CYG	None
Picture characters 6, 7, 8, H	CYSSEH	None
Picture character M	CYSTM	None
Picture character F	CYF	None
Converts integer constants to scale factor	CYC97	CYCONV
Calculates scale factor	CYFNT	None

Table FQ1. Phase FQ Routine/Subroutine Directory

Routine/Subroutine	Function
CYAST	Processes picture character *.
CYBR2	Identifies picture character.
CYBR3	Controlling scan of PICTURE chain.
CYCONV	Converts integer constant to scale factor.
CYCPBS	Processes picture characters slash (/), comma(,), point (.), and B.
CYCRDB	Processes picture characters CR, DB.
CYC21	Adjusts data to terminate picture before illegal character.
CYC97	Converts integer constant to scale factor.
CYE	Processes picture character E.
CYEK	Completes entry for correct picture.
CYENDD	Releases control at end of picture chain.
CYF	Processes picture character F.
CYFIND	Obtains code for next character in picture.
CYFNT	Calculates scale factor.
CYG	Processes picture character G.
CYK	Processes picture character K.
CYNINE	Processes picture character 9.
CYOTT	Processes picture characters 1,2,3.
CYP	Processes picture character P.
CYSDPM	Processes picture characters S, $, +, -.
CYSS	Processes picture characters 6,7.
CYSSEH	Processes picture characters 8,H.
CYSTM	Processes picture character M.
CYTABL	Code table for picture characters.
CYV	Processes picture character V.
CYY	Processes picture character Y.
CYZ	Processes picture character Z.

Table FT. Phase FT Dictionary Scan

Statement or Operation Type	Main Processing Routine	Subroutines Used
Scans second file	AC1	None
Scans dictionary	B1	None
Data variables	DATVAR	None
Event or label variables	EVLABV	None
Dimension attributes	F0	None
Scans AUTOMATIC chain	G2	None
Scans STATIC chain	G3	None
Scans CONTROLLED chain	GE1	None
Sets dope vector required bit	P1A	None
ENTRY type 1 entries	QA4	None
ENTRY type 2 entries	QA3	PROPIC
ENTRY type 3 entries	QA2	None
ENTRY type 4 entries	QX	None
ENTRY type 5 and 6 entries	QA1	PROPIC
Constants	CONST	None
Structures	STRUCT	AJDMRT, MKDMTB, MVTXT

Table FT1. Phase FT Routine/Subroutine Directory

Routine/Subroutine	Function
AC1	Scans second file.
AC2	Detects second file statement marker.
AF3	Points relevant dictionary entry at statement.
AJDMRT	Modifies second file statements to initialize dope vectors for base elements, rather than for the containing structures.
B1	Scans dictionary.
BIA	Initializes dictionary scan.
CONST	Processes constants.
DATVAR	Processes data variables.
EVLABV	Processes event or label variables.
F0	Processes dimension attributes.
FULIN	Moves initial label statement to the second file, collecting together all statements for the same array.
GE1	Scans CONTROLLED chain.
G2	Scans AUTOMATIC chain.
G3	Scans STATIC chain.
MKDMTB	Creates dimension tables.
MVTXT	Moves text blocks.
PROPIC	Extracts precision data from picture tables.
P1A	Sets 'dope vector required' bit.
QA1	Processes ENTRY type 5 and 6 entries.
QA2	Processes ENTRY type 3 entries.
QA3	Processes ENTRY type 2 entries.
QA4	Processes ENTRY type 1 entries.
QX	Processes ENTRY type 4 entries.
STRUCT	Processes structures.
TRVECT	Transfer vector for appropriate chaining routine.

Table FV. Phase FV Dictionary Second File Merge

Statement or Operation Type	Main Processing Routine	Subroutines Used
Reverses second file pointers; scans text for block heading statements; allocates statements and references to dynamically defined data	IEMFV	DATCPY, DEFMOV, DEFTST, F2MOVE, MOVE
Examines ADF references in second file; completes defined item dictionary entry	DEFCOM	None
Detects dictionary references which refer to dynamically defined data	DEFTST	None
Examines dictionary references and moves any associated second file statements to the output string	DATCPY	F2MOVE, MOVE
Inserts dictionary reference of pointer in associated based variable entry	FVPTR	None
Processes adjustable extents on based arrays	FVADV	None
Processes adjustable lengths on based strings	FVSDV	None

Table FV1. Phase FV Routine/Subroutine Directory

Routine/Subroutine	Function
DATCPY	Moves second file statements associated with dictionary reference to output string.
DEFCOM (FW)	Examines ADE references in second file; completes defined item dictionary entry.
DEFMOV	Modifies text references to dynamically defined data.
DEFTST	Detects dictionary references which refer to dynamically defined data.
FV0	Scans second file reversing pointers.
FV9	Initializes text scan.
FV10	Scans text.
FV16	Releases control.
FV18	Processes ALLOCATE statements.
FV19	Processes PROCEDURE statements.
FV20	Processes BEGIN statements.
FV34	Scans AUTOMATIC chain.
FVPTR	Inserts D.R. of pointer in associated based variable entry.
FVADV	Processes adjustable extents on based array.
FVSDV	Processes adjustable lengths on based strings.
F2MOVE	Moves second file statement to output string.
IEMEV	Controlling scan of second file; invokes processing routines.
MOVE	Moves text from input string to output string.

Table FX. Phase FX Dictionary Attributes and Cross Reference

Statement or Operation Type	Main Processing Routine	Subroutines Used
Scans STATIC chain for all items	FX0000	FX0010
Scans PROCEDURE-BEGIN chain	FX0100	FX0010, FX0101, FX0105, FX0120
Scans CONTROLLED chain for non-parameter DECLARED, CONTROLLED dictionary entries	FX0170	None
Scans parameter list from PROCEDURE and ENTRY statements	FX0101	FX0010
Sorts BCD of variables and creates entries in scratch text storage	FX0010	None
Scans circular chain of ENTRY statement dictionary entries associated with a particular PROCEDURE statement	FX0105	FX0101
Scans AUTOMATIC chain associated with particular PROCEDURE or BEGIN block	FX0120	FX0010
Prints heading line for tables according to options specified	FXHD	ATTMOV
Scans sorted chain of identifiers	FXPRNT	FX0299
Determines attributes of a given identifier if the ATR option is specified	FX0299	ATTMOV, FXBCD, FXDCLN, FXEND, REFMOV
Scans the chain of references for a given identifier (if XREF is specified) and prints them in external decimal form	REFMOV	FXDCLN
Converts EBCDIC of particular attribute to required external form and moves it to print area	ATTMOV	None
Prints BCD of identifier having converted it from internal form to external form	FXBCD	None
Converts an internal binary number to external decimal form and moves it to print buffer	FXDCLN	None
Frees all scratch text storage and releases control to next phase	FXEND	None

Table FX1. Phase FX Routine/Subroutine Directory

Routine/Subroutine	Function
ATTMOV (FY)	Converts EBCDIC data to required form, moves data to print area.
FXBCD (FY)	Moves identifier BCD to print area, determines options to be printed.
FXDCLN (FY)	Converts binary number to external BCD, moves it to print area.
FXEND (FY)	Frees scratch storage, releases modules, releases control.
FXHD (FY)	Prints heading line for table according to options specified.
FXPRNT (FY)	Scans sorted chain of identifiers.
FX0000	Scans STATIC chain.
FX0010	Sorts BCD of variables and creates entry in text for each item.
FX0030	Tests for end of STATIC chain.
FX0100	Scans PROCEDURE-BEGIN chain.
FX0101	Scans parameter list from PROCEDURE and ENTRY statements.
FX0105	Scans circular chain of ENTRY statement dictionary entries associated with a particular PROCEDURE statement.
FX0120	Scans AUTOMATIC chain associated with particular PROCEDURE or BEGIN block.
FX0170	Scans CONTROLLED chain for nonparameter DECLARED CONTROLLED dictionary entries.
FX0250	Scans text, making chain of references to each dictioary entry.
FX0299	Determines attributes of a given identifier if the ATR option is specified.
REFMOV (FY)	Moves the references to an identifier to the print buffer and prints.

•Table F1. Module F1 Compiler Control

Function	Main Processing Routine	Routines Used
Checks whether syntax check should terminate compilation Entry to the operating system: None	IEMF1	ZABORT,ZUPL,RLSCTL

Chart 04. Pretranslator Logical Phase Flowchart

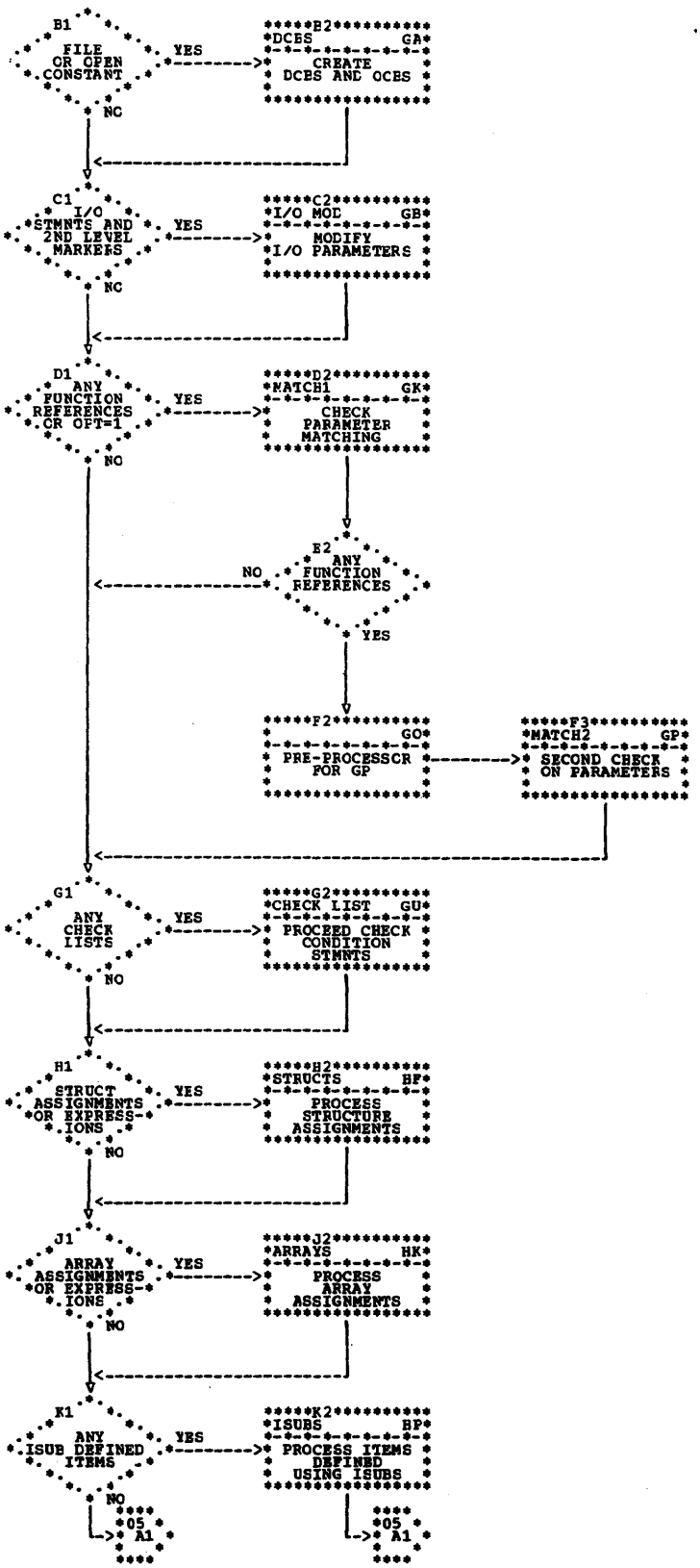

Chart GA. Phase GA Overall Logic Diagram

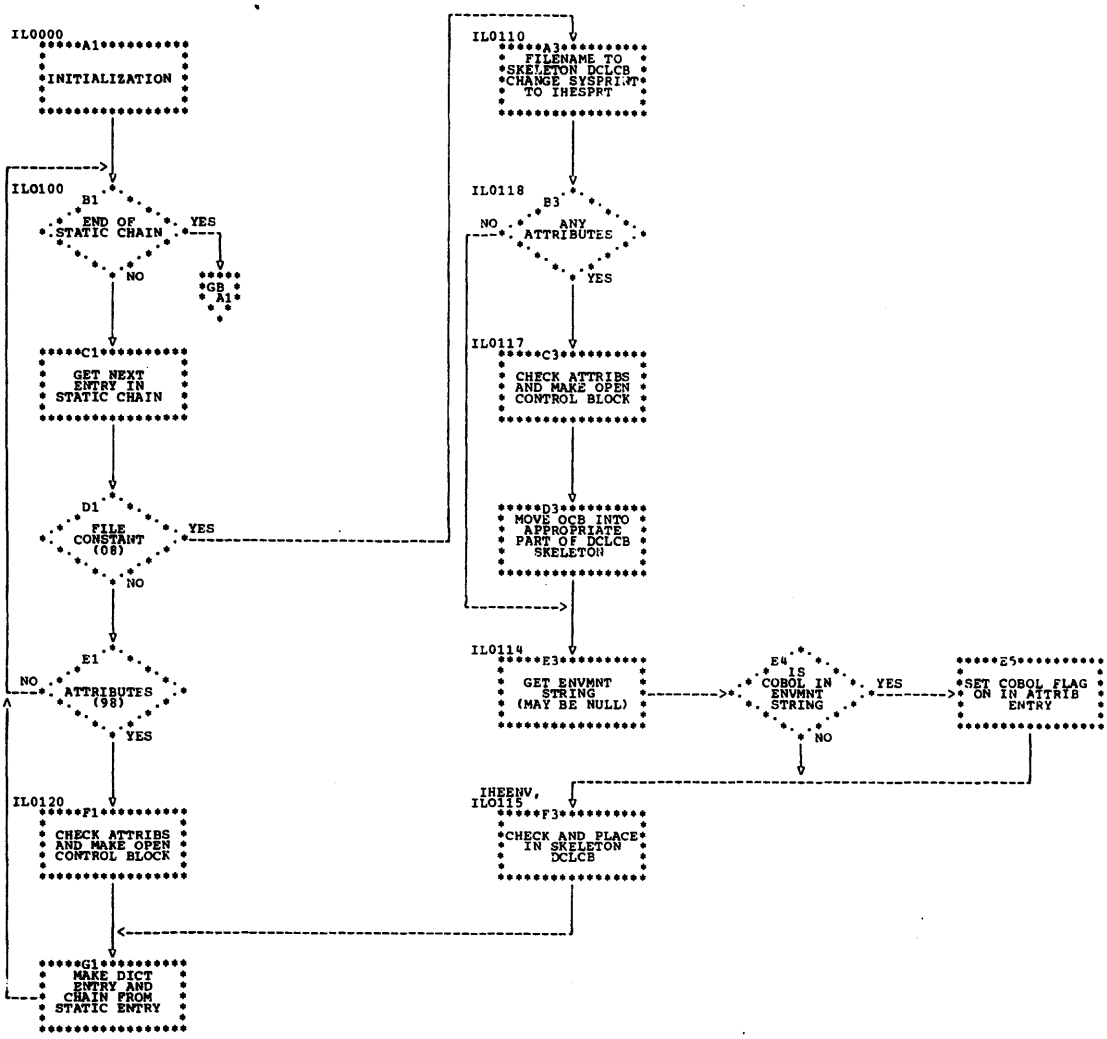

Chart GB. Phase GB Overall Logic Diagram

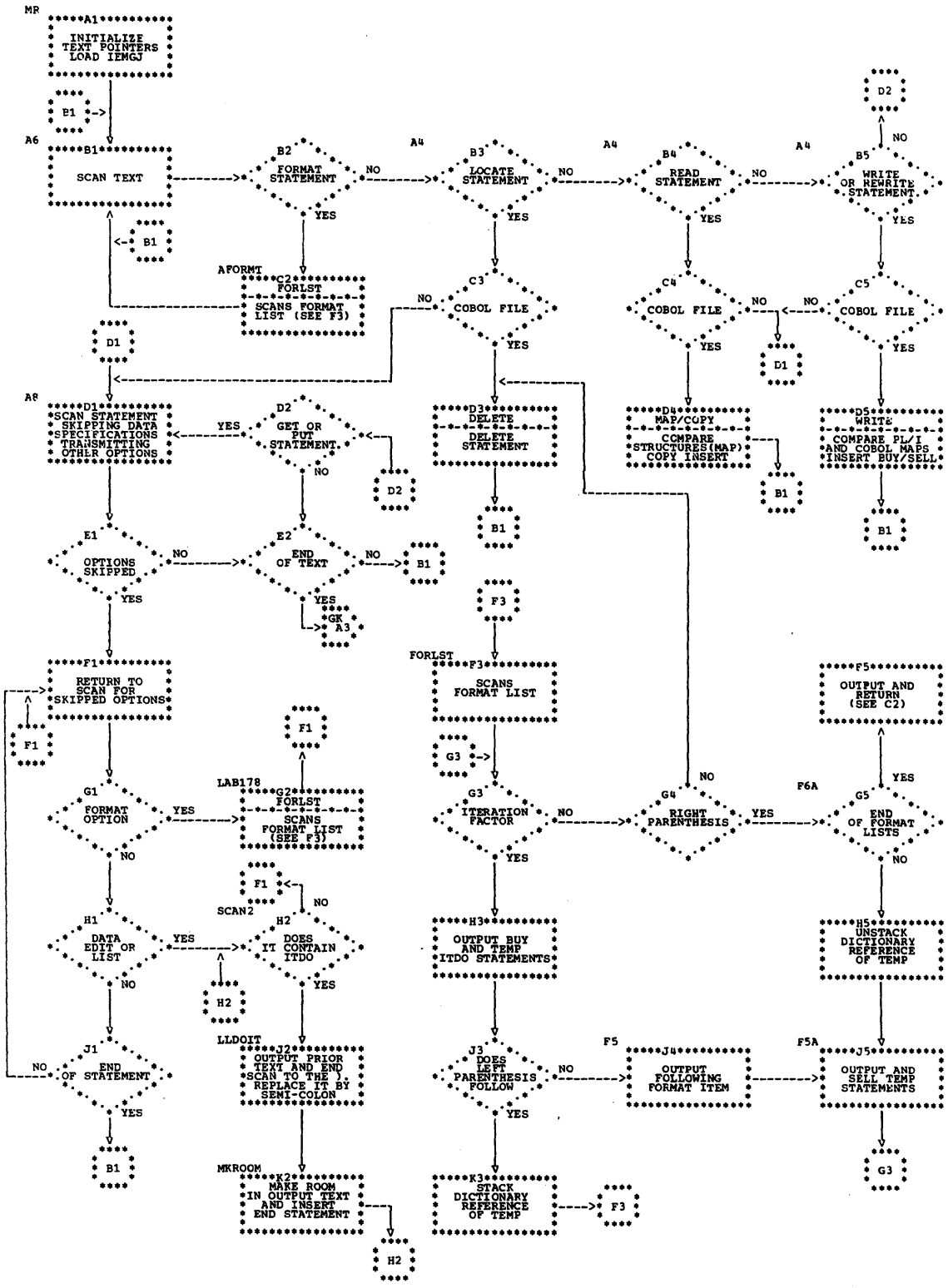

Chart GK. Phase GK Overall Logic Diagram

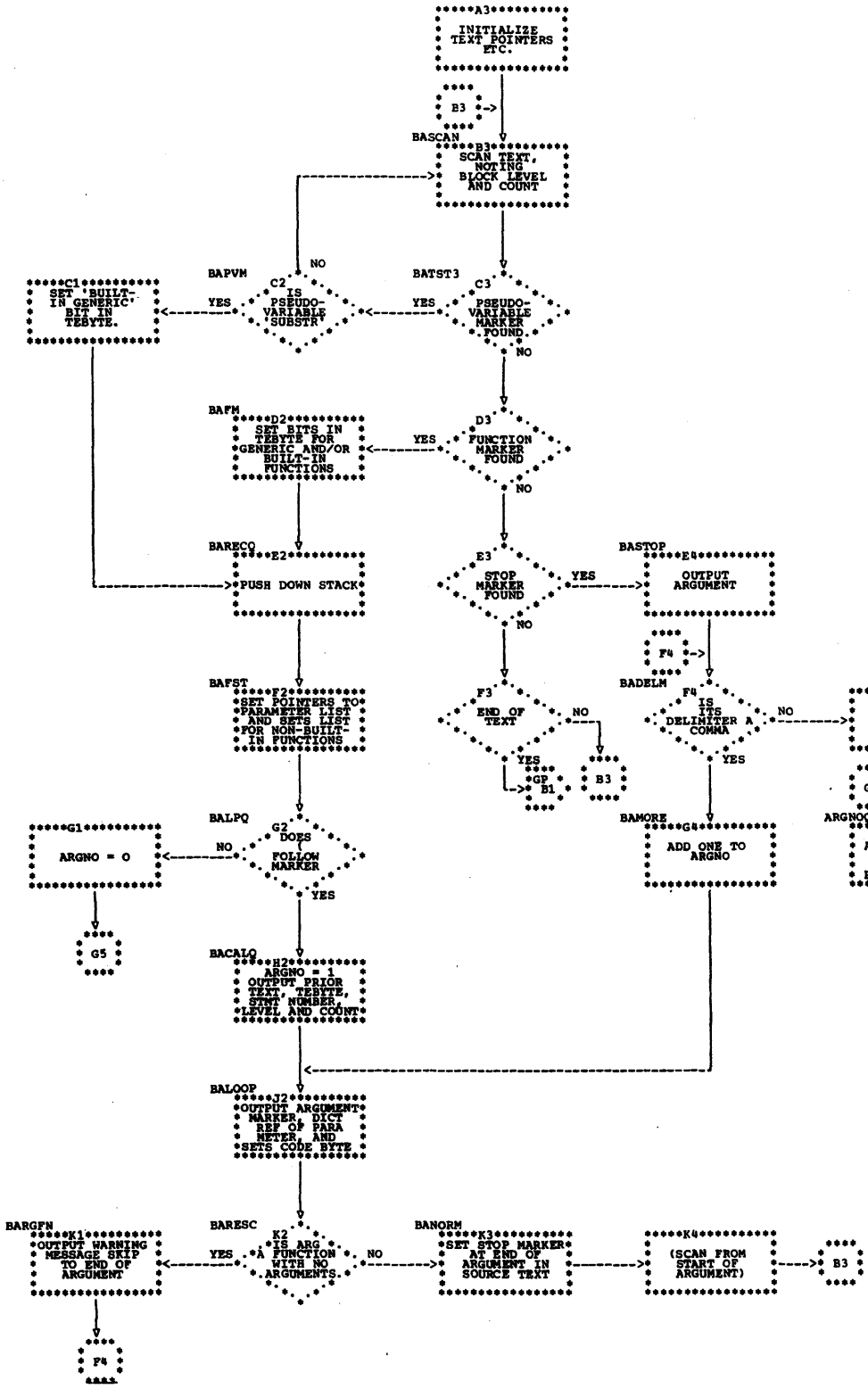

Chart GP. Phase GP Overall Logic Diagram

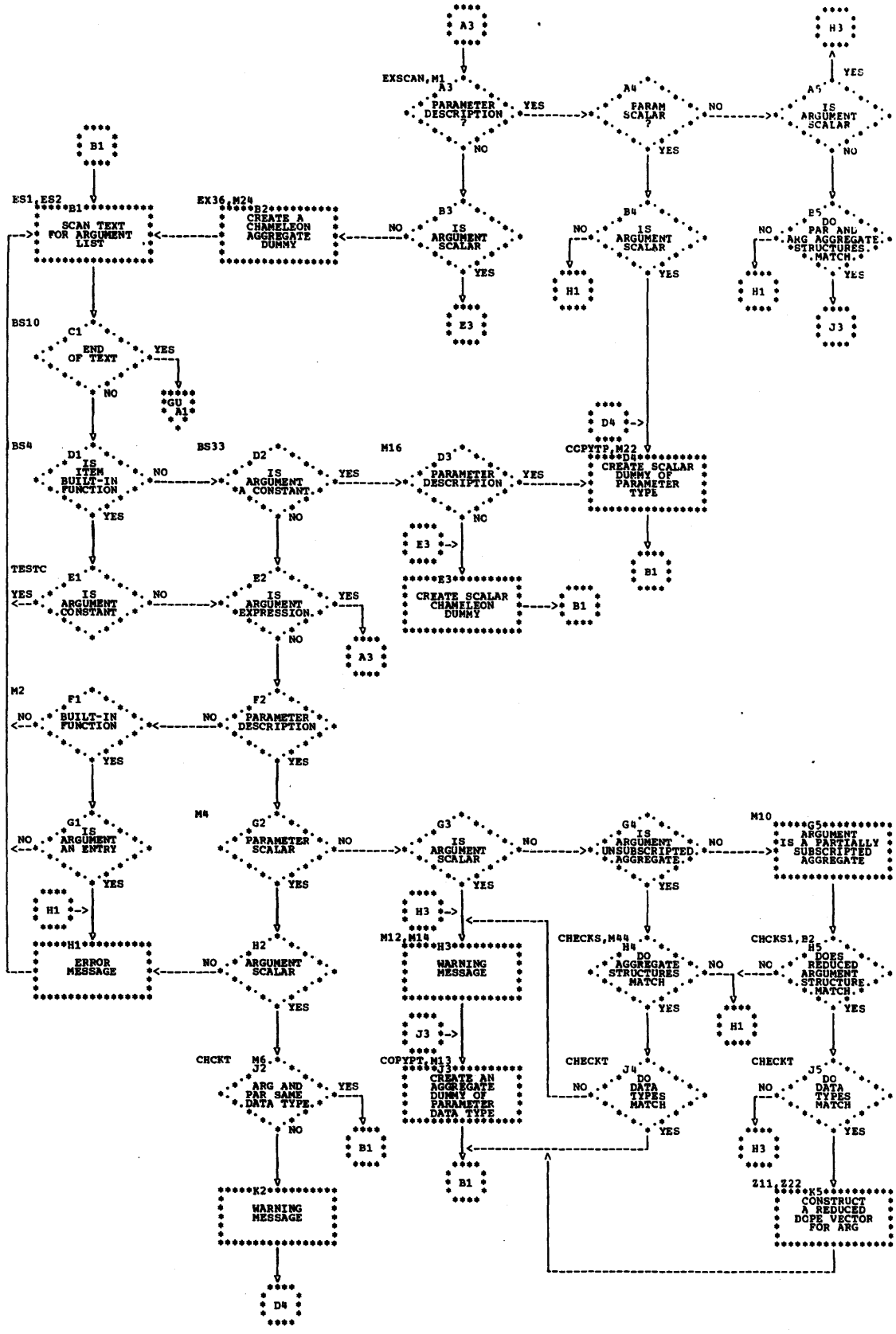

Chart GU. Phase GU Overall Logic Diagram

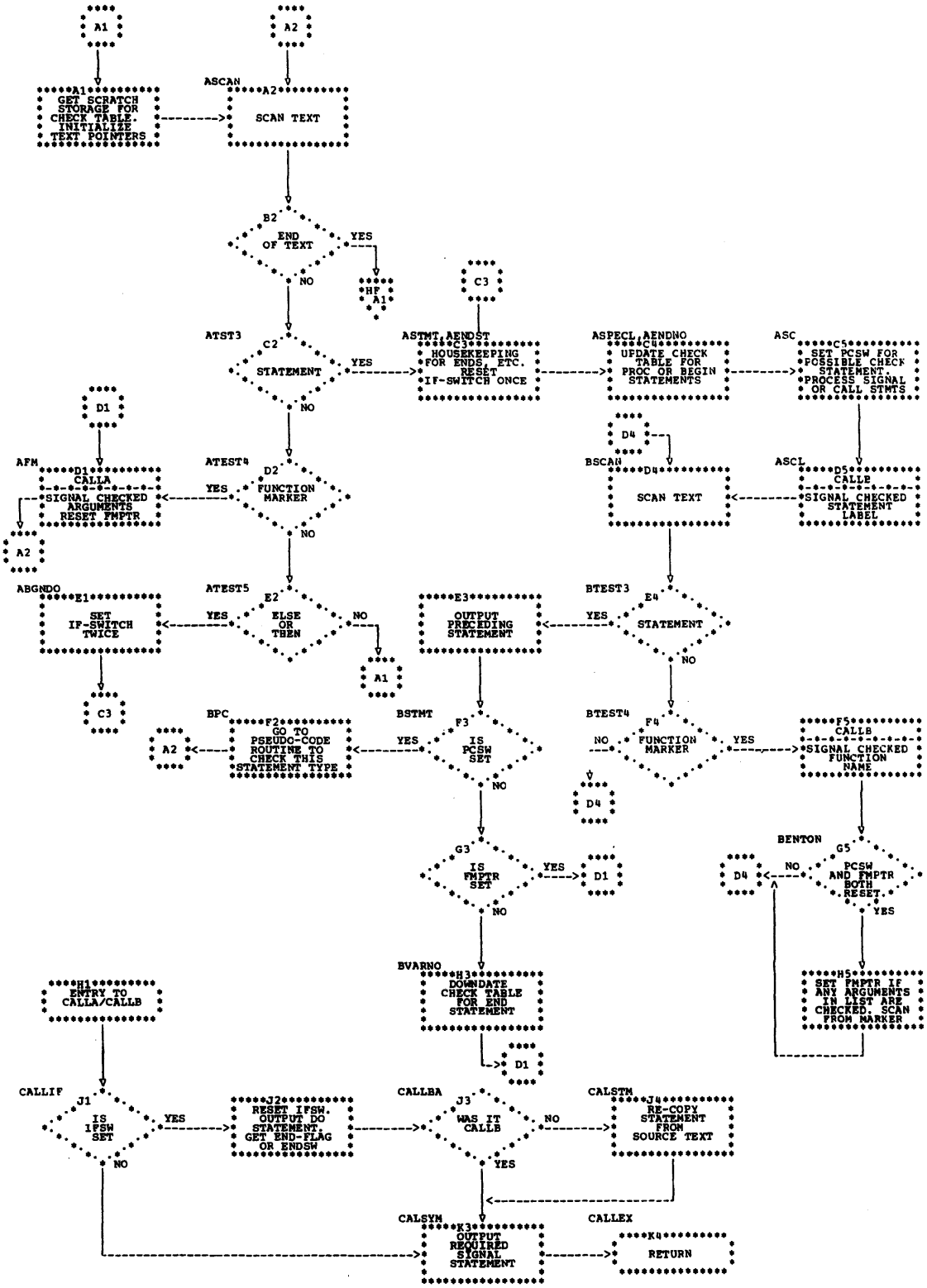

Chart HF. Phase HF Overall Logic Diagram

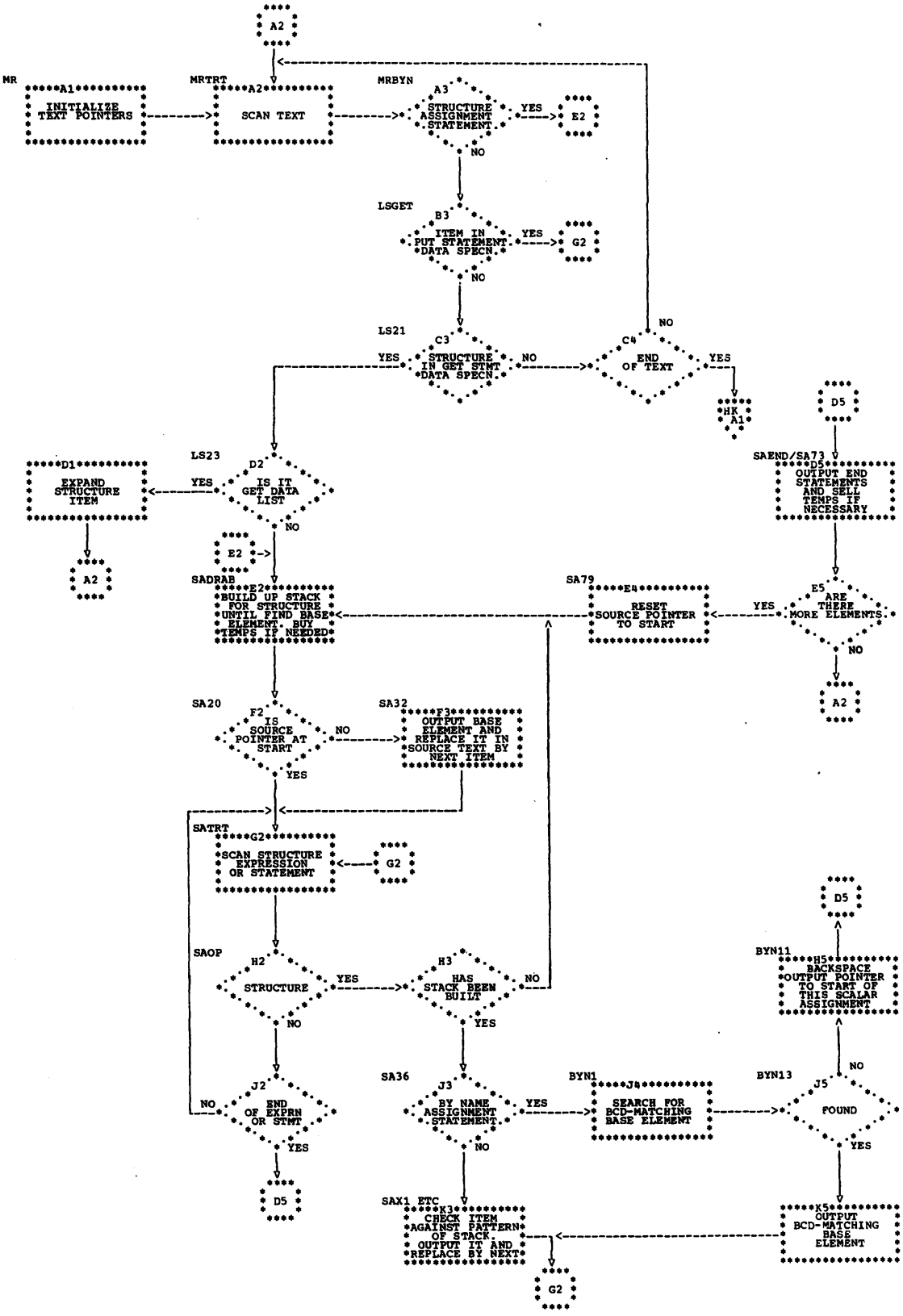

Chart HK. Phase HK Overall Logic Diagram

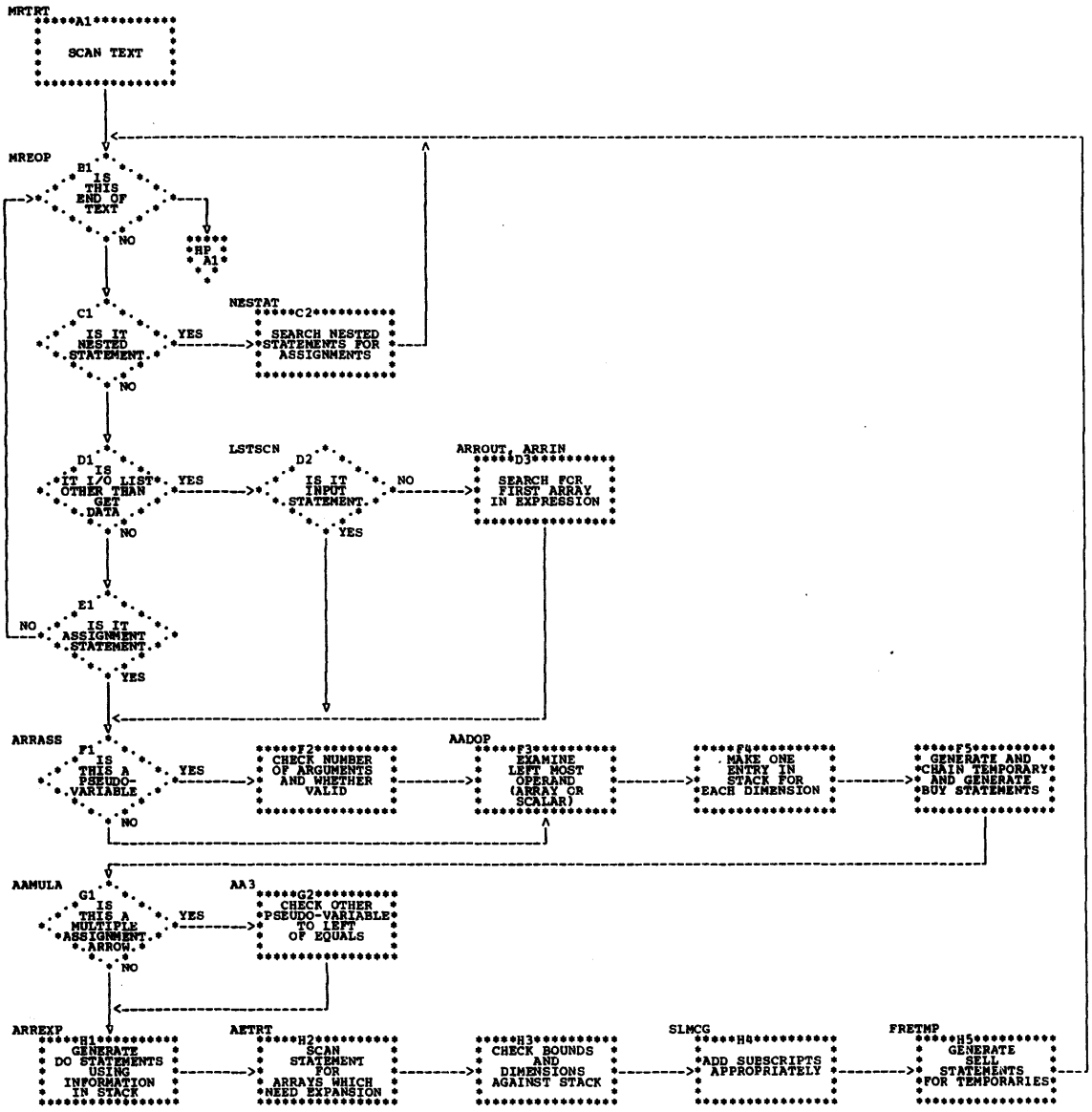

Chart HP. Phase HP Overall Logic Diagram

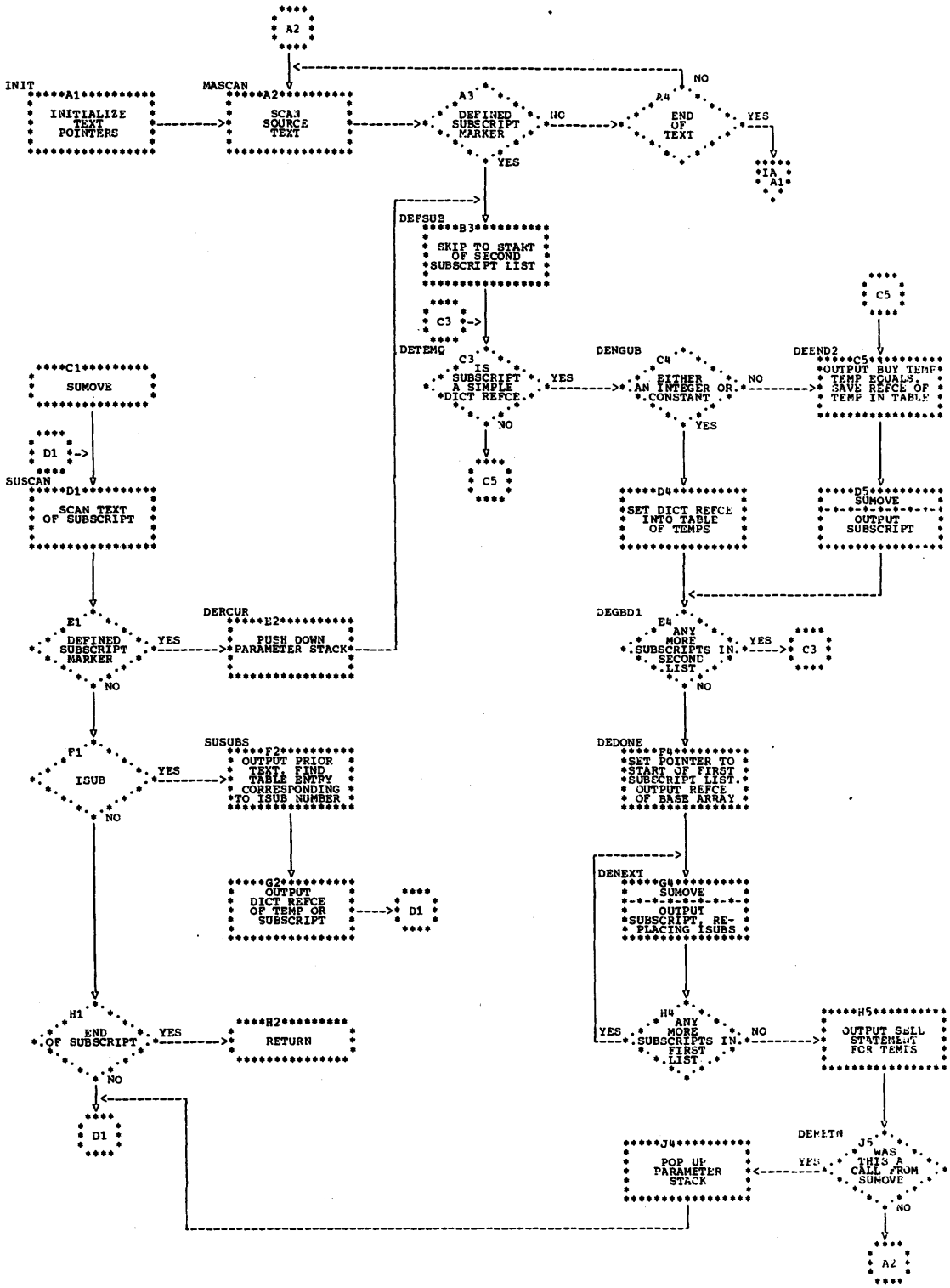

Table GA. Phase GA DCLCB Generation

Statement or Operation Type	Main Processing Routine	Subroutines Used
Scans STATIC chain	IL0100	IL0110, IL0120
Generates DECLARE control block entry	IL0110	CHKATT, IHEENV
Generates OPEN control block entry	IL0120	CHKATT

Table GA1. Phase GA Routine/Subroutine Directory

Routine/Subroutine	Function
CHKATT	Checks attributes and creates control words.
IHEENV	Checks environment options, and inserts them into DECLARE control blocks.
IL0000	Entry point from compiler control.
IL0100	Scans STATIC chain.
IL0110	Generates DECLARE control block entry.
IL0114	Test point for environment entry.
IL0115	Return point from environment processing.
IL0117	Processes file attributes entry.
IL0118	Branch point of SYSPRINT file found.
IL0120	Generates OPEN control block entry.
IL0200	Releases control.

Table GB. Phase GB Pretranslator I/O Modification

Statement or Operation Type	Main Processing Routine	Subroutines Used
Removes all second level markers	Throughout phase	None
Reorders options to put EDIT, DATA or LIST last	A8	SCNS, SCAN2
Moves DO specifications to precede relevant list in data lists, adds END statements	SCAN2	LLDOIT
Expands iteration factors in format lists	FORLST	None
Checks for use of COBOL files in READ, WRITE, and LOCATE Statements	A4	LOCATE, READ, WRITE, DELETE, MAP, COPY, STSCAN

Table GB1. Phase GA Routine/Subroutine Directory

Routine/Subroutine	Function
AFORMT	Processes FORMAT statements.
A4	Checks for use of COBOL files in READ, WRITE, and LOCATE statements.
A6	Scans source text for GET and PUT statements.
A8	re-orders options to put EDIT, DATA, or LIST last.
A21	Scans GET or PUT statement for data specification.
COPY (GC)	Copies a structure and places the copy on the COBOL chain. Sets up text skeletons.
DELETE (GC)	Removes an offending I/O statement and inserts an error statement in the output text.
FORLST	Expands iteration factors in format lists.
F2	Creates and buys integer temporary.
F5	Scans and outputs format item.
F5A	Sells temporary.
F6	Tests for end of format list.
F6A	Tests for end of format specification.
F6B	Outputs end of format specification.
F7	Scans format list.
LAB17B	Processes format list in GET or PUT statement.
LLDOIT	Moves DO specifications to precede relevant list in data lists, adds END statements.
LOCATE (GC)	Checks for the use of a COBOL file, and puts out a warning diagnostic.
MAP (GC)	Compares the PL/I and COBOL and PACKED(NONSTRING) mappings of a structure.
MKROOM	Provides space in a statement in new source file.
MR	Initializes text blocks and pointers, and obtains scratch storage.
READ (GC)	If a READ IGNORE is encountered, no action is taken. If a READ SET is encountered, a warning diagnostic is given. If a READ INTO for a structure is encountered, PL/I and COBOL mappings are compared.
SCAN2	Scans option list for end of option or statement, expands DO specifications, and changes certain function markers into pseudo-variable markers.
SCNS	Scans option list for end of option or statement.
STSCAN (GC)	Stores the dictionary reference of the file and the INTO/FROM variable, and sets flags.
WRITE (GC)	For structures, the PL/I and COBOL mappings are compared.

Table GK. Phase GK Pretranslator Parameter Matching 1

Statement or Operation Type	Main Processing Routine	Subroutines Used
Scans source text for function markers	BASCAN	CPSTMT, CRSTMT
Processes function, puts out reference and initial code bytes	BAFM	SCANRP
Processes arguments	BALOOP	ADDTGT, SCNCRP
Checks numbers of arguments	ARGNOQ	None

Table GK1. Phase GK Routine/Subroutine Directory

Routine/Subroutine	Function
ADDTGT	Adds data to output text.
ARGNOQ	Checks number of statements.
BABT3	Tests for STOP marker.
BACALQ	Outputs function and first bytes of argument list.
BADELM	Tests for end of argument list.
BAFM	Processes function, puts out reference and initial code bytes.
BAFST	Locates SETS list and parameter list for function.
BALOOP	Processes arguments.
BALPQ	Tests whether argument list is present.
BAMORE	Accesses next argument in list.
BANORM	Sets STOP marker to scan argument.
BAPVM	Examines pseudo-variable.
BARECQ	Tests for nested function reference.
BARGFN	Outputs warning message.
BASCAN	Scans source text for function markers.
BASTOP	Outputs argument.
CPSTMT	Adds closing bytes of a statement to output text.
CRSTMT	Adds first bytes of a statement to output text.
SCANRP	Scans argument list.
SCNCRP	Scans argument.

Table GO. Phase GO Preprocessor Parameter Matching 2

Statement or Operation Type	Main Processing Routine	Subroutines Used
Initialization and scratch core utilization for Parameter Matching 2	PMATCH	POLYMV

Table GO1. Phase GO Routine/Subroutine Directory

Routine/Subroutine	Function
PMATCH	General initialization and scratch core utilization for Parameter Matching 2.
POLYMV	Moves the routines POLY1, POLY2, POLY3, POLY4 and POLY5 into scratch storage (see Table GP).

Table GP. Phase GP Pretranslator Parameter Matching 2

Statement or Operation Type	Main Processing Routine	Subroutines Used
Scans text for procedure and function calls	BS1	ADDTT, STKINF, UNSTCK
Examines argument lists for expressions	BS4	EXSCAN, M1, M4, M16, SCANFR
Creates temporaries for scalar expressions and constants	M16	ADDTT, COPYTP, MKDCEN, SETBUY
Creates temporaries for array expressions	E2	ADDTT, CHCKB1, COPYTP, MKDCEN, SETBUY
Creates temporaries for partially subscripted array expressions	E3	ADDTT, CHCKB4, COPYTP, MKDCEN, SETBUY
Creates special temporaries for partially subscripted arrays	EX16	ADDTT, BS2, CHCKB4, CHECKT, COPYT1, MKDCEN, STKINF, UNSTCK, Z11, SETBUY, SETMT
Checks single arguments (except structures) with parameter descriptions	M4	CHECKT, M16
Checks single structure arguments	M5	CHECKS, CSTTMP
Creates temporaries for structure expressions	M21	CSTMP2, MKDCEN, CHCKB4, SETMT, ADDTT
Creates temporaries for partially subscripted structure	Z22	BS2, ADDTT
Compare the two arguments of the POLY function and create temporaries if the arguments are not both floating and do not have the same scale and precision	POLY1, POLY2, POLY3, POLY4, POLY5	BS2
Creates special dictionary entries for generic entry labels used as arguments	M37	None

Table GP1. Phase GP Routine/Subroutine Directory

Routine/Subroutine	Function
ADDTT (GR)	Adds text to output block.
BS1	Scans input text.
BS2	Scans input text.
BS4	Examines argument lists for expressions.
BS10	End-of-program routine.
BS33	Tests for constant argument.
CHCKB1 (GR)	Compares the bounds of argument and parameter arrays, and creates new dimension tables for temporary arrays.
CHCKB2 (GR)	Compares the bounds of argument and parameter arrays where the argument is partially subscripted, and creates new dimension tables for temporary arrays.
CHCKB3 (GR)	Creates a new dimension table from a parameter description.
CHCKB4 (GR)	Creates new dimension tables for partially subscripted array and structures.
CHCKS1 (GR)	Compares the structuring of argument and parameter structures.
CHECKB (GR)	Compares the bounds of argument and parameter arrays.
CHECKS (GR)	Compares structuring and data types of argument and parameter structures.
CHECKT (GR)	Compares data types of arguments and parameters.
COPYTP (GR)	Creates a temporary dictionary entry from a parameter description.
COPYT1 (GR)	Creates a temporary dictionary entry for a partially subscripted array from a parameter description.
CSTTMP/CSTMP2 (GQ)	Create temporary structure dictionary entries.
EXSCAN (GQ)	Scans expressions for arrays and structures.
EX16 (GQ)	Creates temporary arrays for partially subscripted array arguments.
EX36 (GQ)	Creates a chameleon dictionary entry.
E2 (GQ)	Creates temporaries for array expressions.
E3 (GQ)	Creates temporaries for partially subscripted array expressions.
MKDCEN (GQ)	Makes dictionary entries.
M1 (GQ)	Examines argument expressions.
M2 (GQ)	Examines single arguments with parameter descriptions.
M4 (GQ)	Compares single arguments with parameter descriptions.
M5 (GQ)	Examines structure arguments.
M6 (GQ)	Tests for structure parameter.
M10 (GQ)	Processes subscripted variable argument.

Table GP1. Phase GP Routine/Subroutine Directory (cont'd)

Routine/Subroutine	Function
M12 (GQ)	Creates a warning message.
M13 (GQ)	Gets BUY text.
M14 (GQ)	Processes scalar argument.
M16 (GQ)	Creates temporaries for scalar expressions and constants.
M21 (GQ)	Creates temporaries for structure expressions.
M22 (GQ)	Processes data item parameter.
M23 (GQ)	Processes label parameter.
M24 (GQ)	Creates a structure temporary.
M37 (GQ)	Creates dictionary entries for generic entry labels which are arguments.
M41 (GQ)	Error routine.
M44 (GQ)	Processes dimensioned scalar argument.
POLY1, POLY2, POLY3, POLY4, POLY5 (all in GO)	Check the arguments to the POLY function and generate code to buy temporaries, if the arguments are not both floating and do not have the same scale and precision.
SCANFR	Scans for matching parentheses.
SETBUY (GQ)	Inserts skeletons to buy temporaries in the output text.
SETMT (GR)	Sets temporary dictionary references in MTF compiler functions for array and structure bounds.
STKINF	Stacks information on encountering nested functions.
TESTC	Tests for constant argument.
UNSTCK	Unstacks information.
Z11 (GR)	Generates text to set up the dope vectors of partially subscripted array temporaries.
Z22 (GR)	Generates text to assign the structure subscripts of partially subscripted structures to temporaries, and then to set up the dope vector for the partially subscripted structure temporary.

Table GU. Phase GU Pretranslator Check List

Statement or Operation Type	Main Processing Routine	Subroutines Used
Scans statement; checks if preceding SIGNAL statement is needed	BSCAN	CALL, LIST, MOVE, SUOPQ
Scans statements; checks if following SIGNAL statement is needed	ASCAN	None
Provides a SIGNAL CHECK statement	CALL	GENTST
Searches list for checked items	SUOPQ	CALL, LIST

Table GU1. Phase GU Routine/Subroutine Directory

Routine/Subroutine	Function
ABGNDO	Sets IF-switch for THEN or ELSE clause.
AFM	Signals checked items in argument list.
ASC	Tests statement identifier and takes action if necessary.
ASCAN	Scans statements; checks if following SIGNAL statement is required.
ASCL	Examines statement dictionary entry.
ASPECL	Examines statement dictionary entry which is not a label.
ASTMT	Housekeeping for end of statement.
ATEST4	Tests for argument list.
ATEST5	Tests for THEN.
ATST3	Tests for end of statement.
BENTON	Test whether argument list contains checked item.
BPC	Processes "possible check" statement.
BSCAN	Scans statement; checks if preceding SIGNAL statement is required.
BSTMT	Tests whether SIGNAL statement may be needed after statement output.
BTEST3	Tests for end of statement.
BTEST4	Tests for argument list.
BVARNO	Tests for END statement.
CALL (GV)	Outputs SIGNAL statement for checked item.
CALLBA (GV)	Tests whether SIGNAL precedes or follows statement responsible.
CALLEX (GV)	Exit from subroutine CALL.
CALLIF (GV)	Tests whether DO statement must be output.
CALSTM (GV)	Re-outputs overwritten statement after DO statement.
CALSYM (GV)	Outputs SIGNAL statement.
GENTST	Checks space in output text block.
LIST (GV)	Updates and searches list of currently checked items.
MOVE	Moves text from source to output.
SUOPQ (GV)	Searches list for checked items.

Table HF. Phase HF Pretranslator Structure Assignment

Statement or Operation Type	Main Processing Routine	Subroutines Used
Scans text for structure assignment Statements, regions of nested statements, output list expressions, and structure references in input lists	MR	BYNAME, GENTST, LSTSCN, MOVE, NSTSCN, STRASS, STREXP, STRURE
Expands structure assignments and expressions into a set of scalar assignments or expressions corresponding to the base elements of the structure operands. Where the base elements are arrays, the corresponding component expressions or assignments are surrounded by appropriately iterating DO groups	BYNAME, STRASS, STREXP, STRURE	DVCON, GENTST, LSTSCN, MOVE, NSTSCN, SBGN
Scans regions of nested statements for structure assignments	NSTSCN	MOVE, NSTSCN, STRASS
Adds text to the output string	MOVE	GENTST
Determines space availability in an output text block	GENTST	MOVE
Scans function argument and subscript lists	LSTSCN	MOVE, NSTSCN
Constructs DO statements and checks bound equivalence	DVCON	GENTST
Constructs subscript lists for references to dimensioned structure base elements	SBGN	GENTST

Table HF1. Phase HF Routine/Subroutine Directory

Routine/Subroutine	Function
BYNAME (HG)	Expands BYNAME structure assignments.
BYN1 (HG)	Searches for matching BCDs down to base elements.
BYN11 (HG)	Returns to start of current output assignment statement.
BYN13 (HG)	Test for matching BCDs.
DVCON (HG)	Constructs DO statements, checks bound equivalence.
GENTST	Determines space in output text block.
LSGET	Tests for GET statement.
LSTSCN	Scans subscript arguments and subscript lists.
LS21	Tests for structure item in data specification.
LS23	Tests for data-directed data specification.
MOVE	Adds text to output string.
MR	Scans text for structure assignment statements, nested statements, output list expressions, and structure references in input lists.
MRBYN	Tests for BY NAME assignment statement.
MRTRT	Scans source text for structures.
NSTSCN	Scans regions of nested statements for structure assignments.
SADRAB (HG)	Builds up stack to show pattern of structure.
SAEND (HG)	Tests whether END statements need to be output.
SAOP (HG)	Examines dictionary reference found.
SATRT (HG)	Scans structure expression or assignment.
SAX1 (HG)	Tests whether item matches the stack pattern.
SA20 (HG)	Tests for start of structure expression.
SA32 (HG)	Outputs base element and replaces it in source text.
SA36 (HG)	Tests for BY NAME assignment statement.
SA73 (HG)	Outputs END statements.
SA79 (HG)	Resets scan pointer to start of expression/assignment.
SBGN	Constructs subscript lists for references to dimensioned structure base elements.
STRASS (HG)	Expands structure assignments into DO loops.
STREXP (HG)	Expands structure expressions.
STRURE (HG)	Expands structure references.

Table HK. Pretranslator Array Assignment

Statement or Operation Type	Main Processing Routine	Subroutines Used
Scans text for array and scalar assignment statements	MR	None
Scans text for nested array and scalar assignment statements	MR	NESTAT
Scans text for array expressions in I/O lists in GET and PUT statements	MR	ARRASS, LSTSCN
Expands arrays into DO loops and scalar assignments; checks dimensions and bounds	ARRASS	FRETMP, MDE, OPTST, SLGCH, SUBSKP

Table HK1. Phase HK Routine/Subroutine Directory

Routine/Subroutine	Function
AADOP (HL)	Examines leftmost operand.
AAMULA (HL)	Tests for multiple assignment.
AA3 (HL)	Checks pseudo-variables.
AETRT (HL)	Scans array expression.
ARRASS (HL)	Expands arrays into DO loops and scalar assignments; checks dimensions and bounds.
ARREXP (HL)	Generates DO loops and subscripts for array references.
ARRIN (HL)	Entry point for array expressions in input lists.
ARROUT (HL)	Entry point for array expressions in output lists.
FRETMP	Generates a SELL statement for temporaries bought in the current statement.
LSTSCN	Scans I/O lists for possible array expressions.
MDE	Makes a temporary dictionary entry.
MR	Scans text for array and scalar assignment statements, for nested array and scalar assignment statements, and for array expressions in GET and PUT statements.
MREOP	Tests for end of text.
MRTRT	Scans text.
NESTAT	Scans nested statements.
OPTST	Tests any given operand.
SLGCH	Generates and checks subscript lists.
SLMCG	Inserts subscripts in expanded array position.
SUBSKP	Skips a subscript or subscript list.

Table HP. Phase HP Pretranslator iSub Defining

Statement or Operation Type	Main Processing Routine	Subroutines Used
Scans source text for references defined by iSUB	MASCAN	MOVE
Processes references defined by iSUB	DEFSUB	GENTST, MOVE, SULIST, SUMOVE
Scans subscripts	SUMOVE (in SULIST)	None

Table HP1. Phase HP Routine/Subroutine Directory

Routine/Subroutine	Function
DEDONE	Resets pointers to scan first subscript list.
DEEND2	Creates and buys temporary.
DEFSUB	Processes references defined by iSUB.
DEGBD1	Tests for end of second subscript list.
DENEXT	Outputs first-list subscript and tests for end of list.
DENGUB	Tests whether dictionary reference is constant or integer variable.
DERCUR	Stacks parameters for recursive entry to DEFSUB.
DERETN	Returns to MASCAN or SUSCAN.
DETEMQ	Tests whether second-list subscript is simple dictionary reference.
GENTST	Checks space in output text block.
INIT	Initializes text blocks and pointers, gets scratch storage.
MASCAN	Scans source text for references defined by iSUB.
MOVE	Moves text from source to output.
SULIST	Scans subscript lists.
SUMOVE	Scans subscripts.
SUSCAN	Scans subscript.
SUSUBS	Replaces iSUB by corresponding subscript or temporary.

● Chart 05. Translator Logical Phase Flowchart

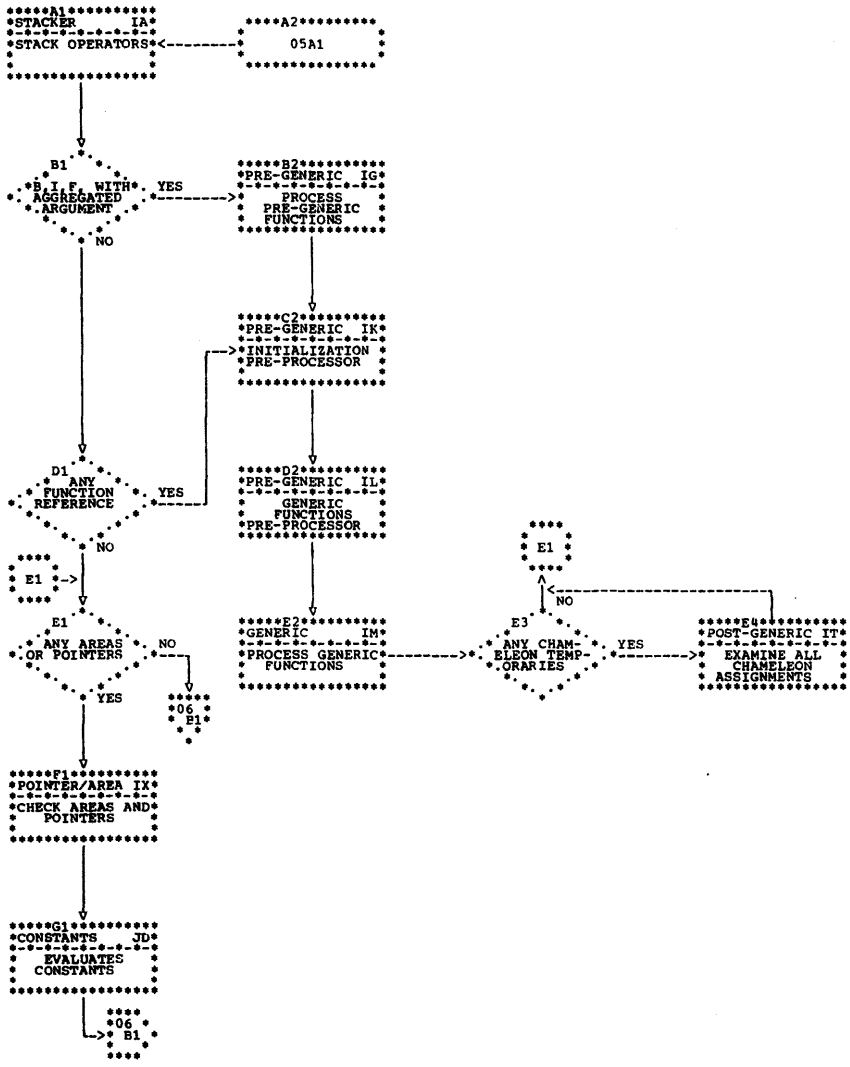

Chart IA. Phase IA Overall Logic Diagram

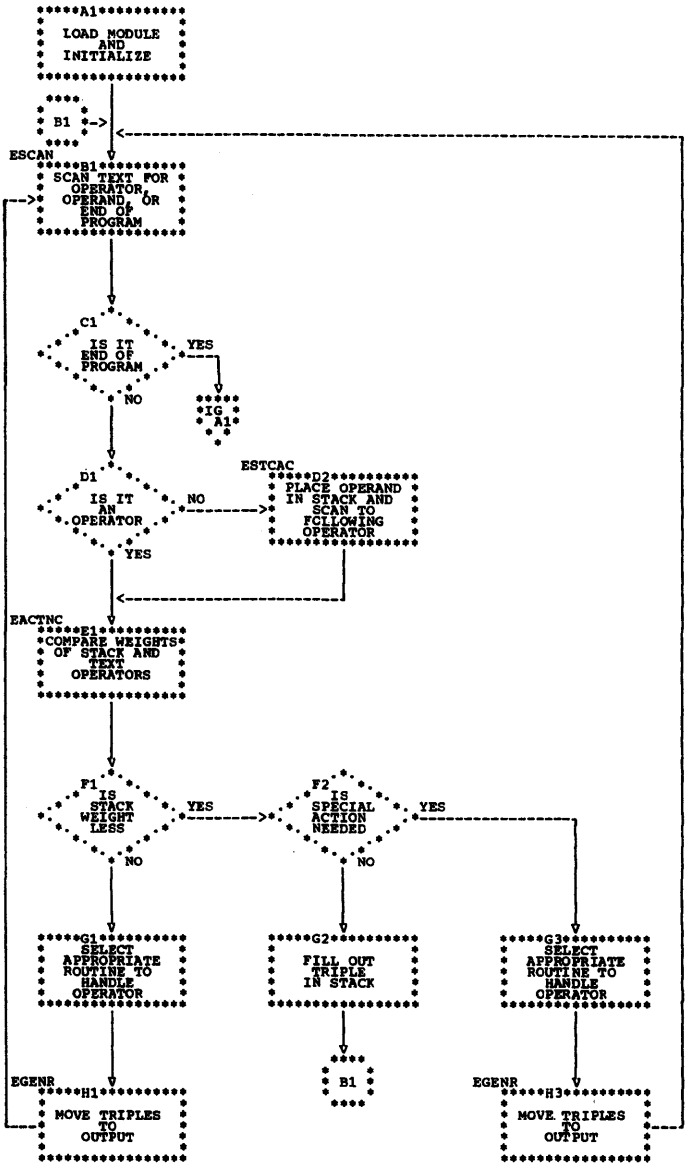

● Chart IG. Phase IG Overall Logic Diagram

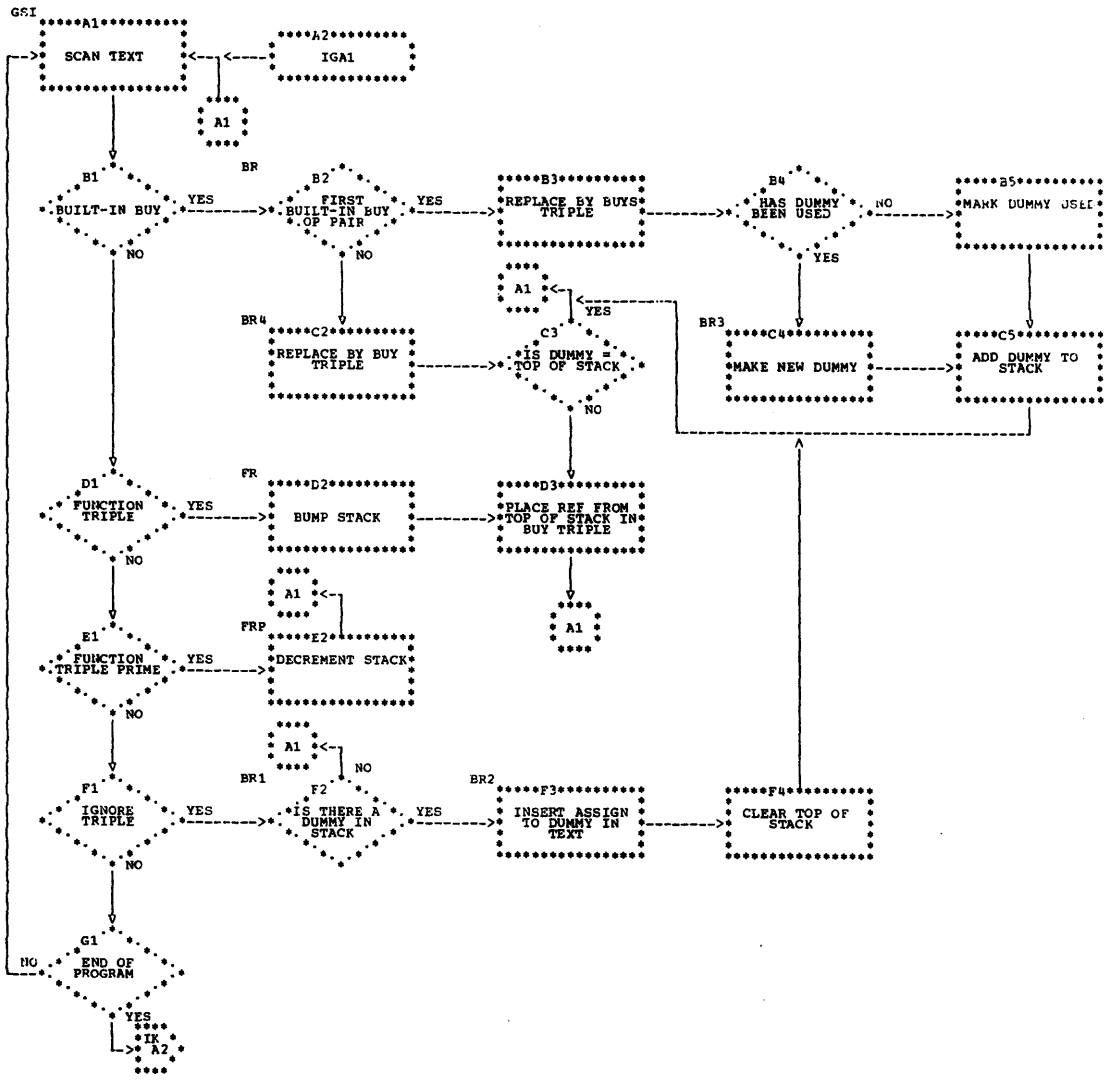

● Chart IK. Phase IK Overall Logic Diagram

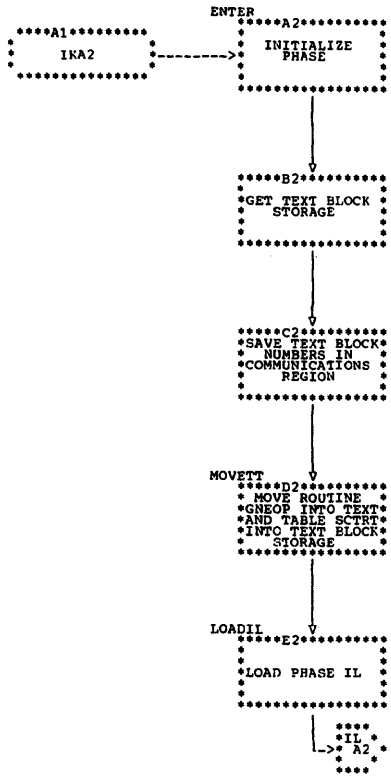

● Chart IL. Phase IL Overall Logic Diagram

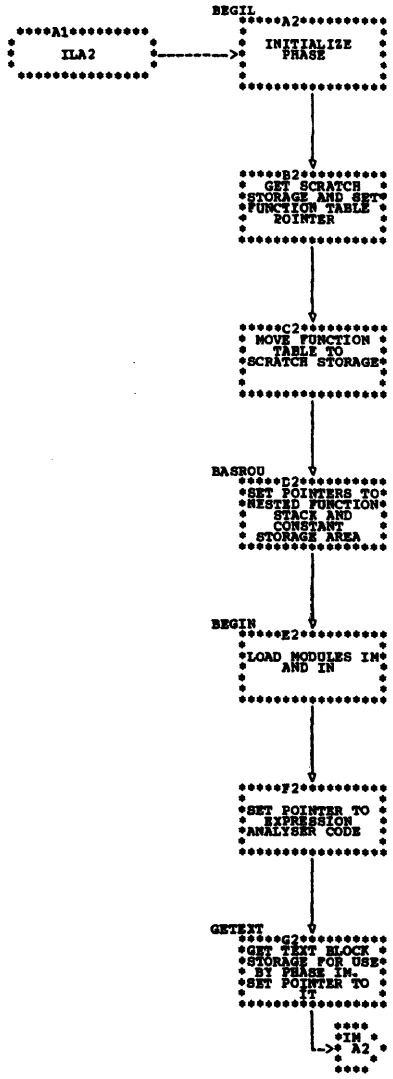

Chart IM. Phase IM Overall Logic Diagram

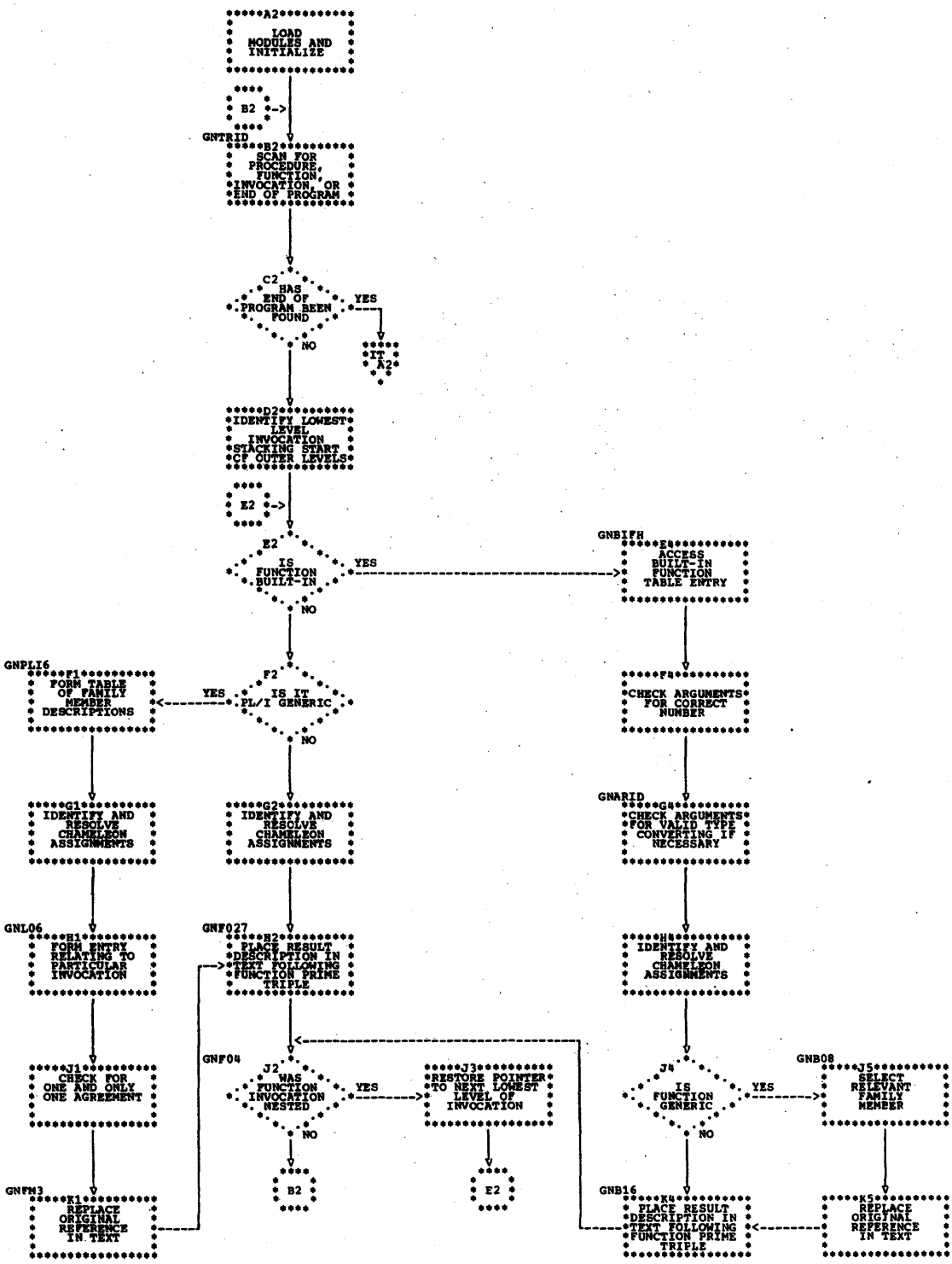

Chart IT. Phase IT. Overall Logic Diagram

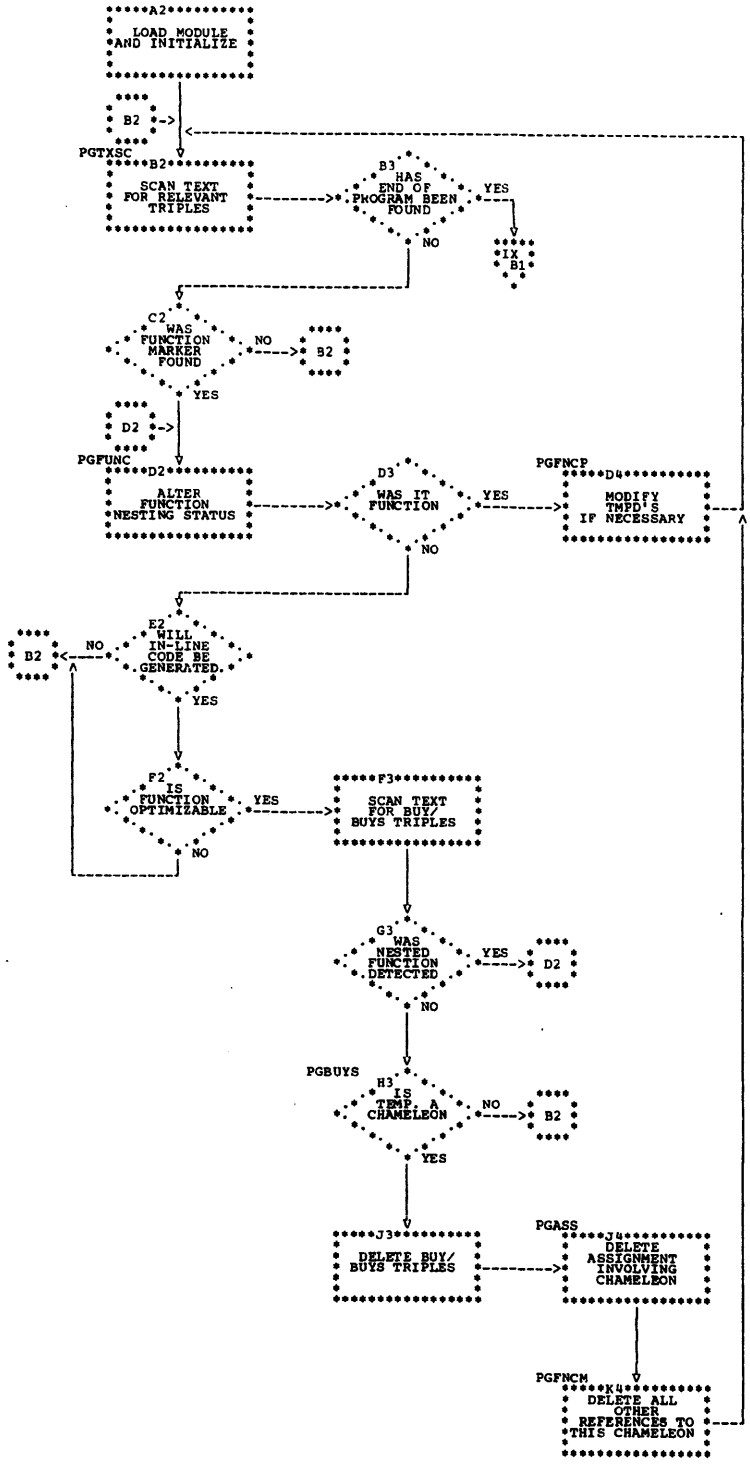

Chart IX. Phase IX Overall Logic Diagram

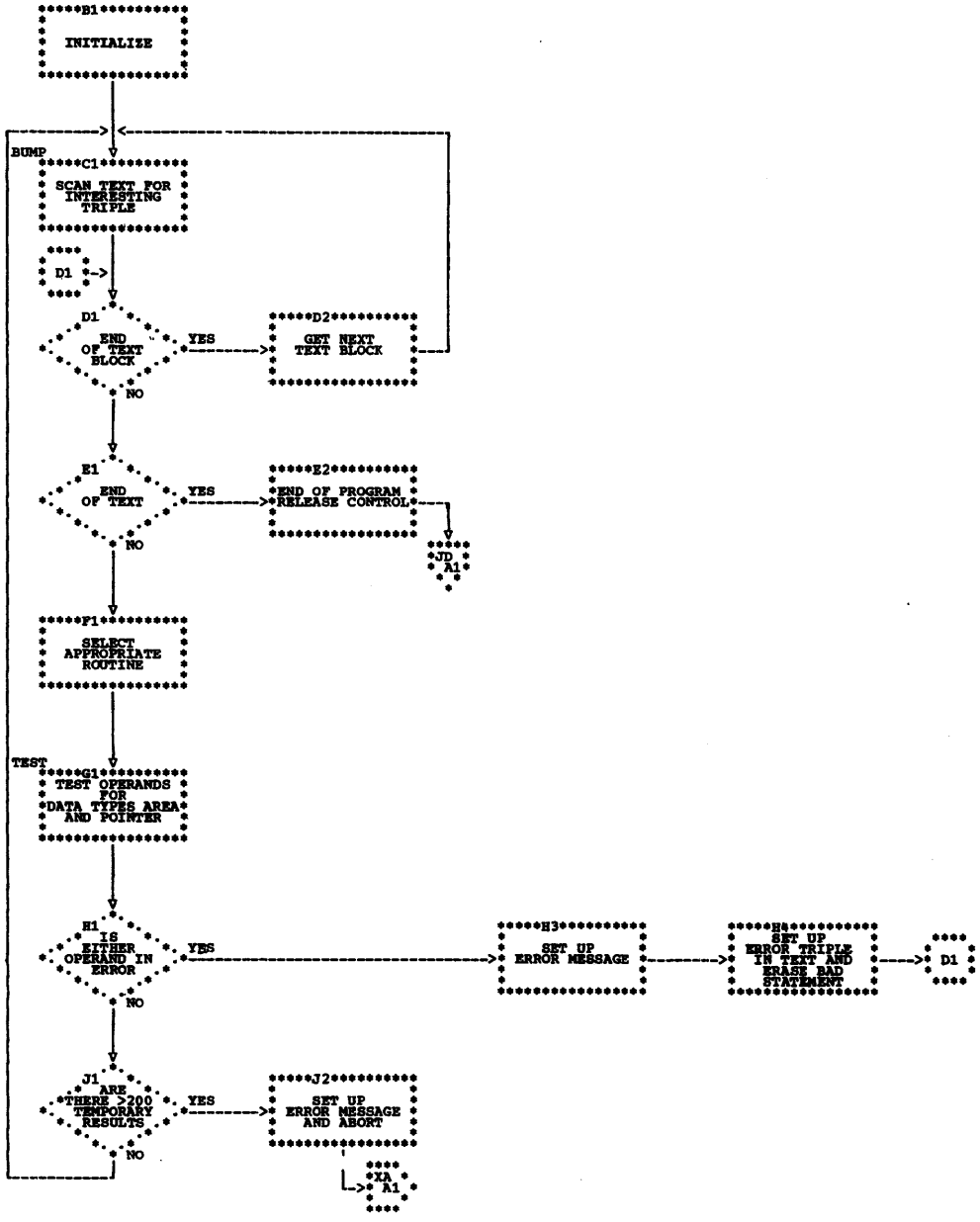

Chart JD. Phase JD Overall Logic Diagram

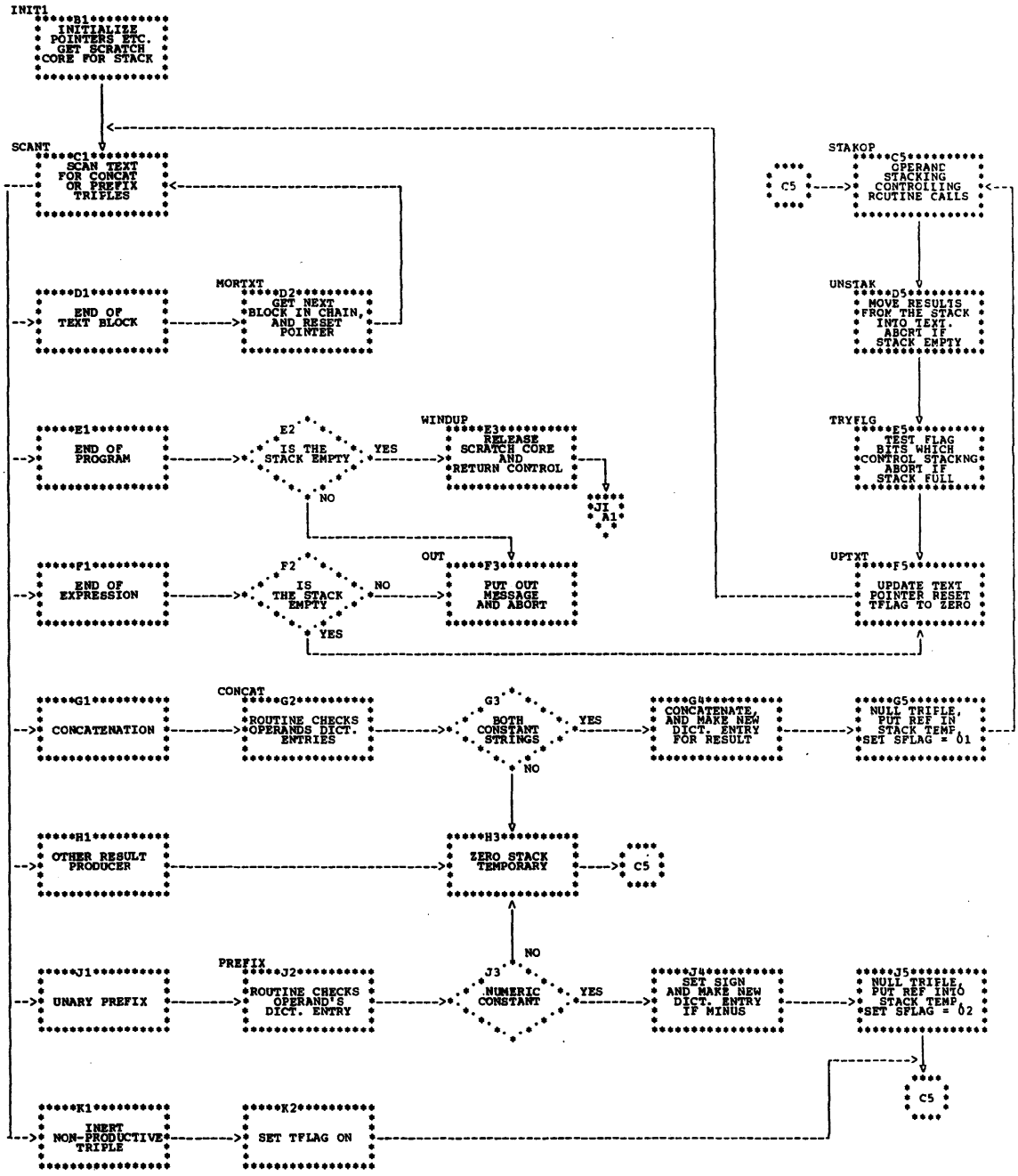

Table IA. Phase IA Translator Stacker

Statement or Operation Type	Main Processing Routine	Subroutines Used
Scans source text	ESCAN	None
Compares transfer vector	EACTNC	EC00 to EC10
Stacks transfer vector	EACTNS	ES00 to ES2E
Generates triples	EGENR	EGENR2, EGENR3, ENEWBL, ENOREP, EREPL, ETRBMP

Table IA1. Phase IA Routine/Subroutine Directory

Routine/Subroutine	Function
EACTNC	Compares transfer vector.
EACTNS	Stacks transfer vector.
EC00 to EC10	Provide comparison action for each operator.
EGENR	Generates triples.
EGENR2	Generates triple for top stack operator, with blank first operand, then deletes the operator from the stack.
EGENR3	Generates triple with two blank operands.
ENEWBL	Obtains and chains new text block for output, resets output pointer.
ENOREP	Deletes top stack operator, flags new top operand as the result of the triple just generated.
EREPL	Replaces top stack operator by its prime, to indicate end of a list of function arguments or subscripts.
ESCAN	Scans source text.
ESTCAC	Places operand in stack.
ES00 to ES2E	Handle stacking of operators.
ETRBMP	Increments output point over one triple if end of text block is found.

Table IG. Phase IG Translator Pre-Generic

Statement or Operation Type	Main Processing Routine	Subroutines Used
Scans text for BUY aggregate argument dummies, end-of-block, and end-of-program triples	GS1	FR, BR, TRF1, GS12
Obtains next text block	GS12	None
Transfers text to output block	TRF1	None
Transfers text skeletons to output	TRF2	GS1, TRF1
Stacks and unstacks information on encountering function and function triples	FR, FRP	None
Inserts assignment statement for aggregate argument dummies	BR	GS1, TRF2

Table IG1. Phase IG Routine/Subroutine Directory

Routine/Subroutine	Function
BR	Inserts assignment statements for aggregate argument dummies.
BR1	Transfers point for IGNORE triple.
BR2	Inserts assignment into text.
BR3	Makes new dictionary entry for temporaries.
BR4	Processes second BUY.
FR, FRP	Stack and unstack information on encountering function and function triples.
GS1	Scans text for BUY aggregate argument dummies, end-of-block, end-of-program triples.
GS12	Chains to next text block on encountering an end of block marker.
TRF1	Transfers text to the output block.
TRF2	Transfers text skeletons to the output block.

• Table IK. Phase IK Translator Pre-Generic

Statement or Operation Type	Main Processing Routine	Subroutines Used
Initializes phase and obtains text block storage for routine GNEOP (called by main generic phase), for translate table SCTRT used by the expression analyser and for nested function stack	ENTER	None
Moves routine GNEOP, and table SCTRT into text block storage	MOVETT	None
Loads Phase IL and transfers control to it	LOADIL	None

• Table IL. Phase IL Translator Pre-Generic

Statement or Operation Type	Main Processing Routine	Subroutines Used
Initializes phase, gets scratch storage and sets pointer to function table	BEGIL	None
Moves function table into scratch storage and sets pointer to nested function stack area	BASROU	None
Loads modules IM and IN and sets base for expression analyzer code	BEGIN	None
Gets text block storage for use by Phase IM. Sets pointer to it. Moves constants into scratch storage and sets pointer to first constant. Transfers control to Phase IM	GETEXT	None

Table IM. Phase IM Translator Generic

Statement or Operation Type	Main Processing Routine	Subroutines Used
Selects function for processing	GNFUNC	GNXTRP
Selects generic procedure	GNPLIG	GNDRTA, GNXTRP, GNFMID
Selects generic Library routines; determines function result	GNBIFH	GNARID, GNCBEF, GNCACI, GNCTBI, GNGNCR, GNPRSC, GNSACH, GNSAPC, GNSBAR, EXPANL, GNSAPR, GNSBRT, GNSFMS
Selects chameleon dummy and inserts it in relevant dictionary entry	GNCHAM	GNXTRP, EXPANL
Controls scan of text -- branches to processing routine	EXPANL	ARITH, LST1, SUBSPT, ASSIGN

● Table IM1. Phase IM Routine/Subroutine Directory

Routine/Subroutine	Function
ARITH (IN)	Calculates type of result of arithmetic operation (except **).
ASSIGN (IN)	Returns to calling phase with result.
EXPANL (IN)	Controls scan of text -- branches to processing routine.
GNARID (IP)	Identifies argument of built-in function and converts it to valid type, if possible.
GNBIFH (IP)	Selects generic Library routine; determines function result.
GNB08 (IP)	Selects relevant family member.
GNB16 (IP)	Sets up result type of a built-in function.
GNCACI	Checks and converts a decimal integer.
GNCBEF	Standardizes argument code byte to a form for generic selection.
GNCHAM	Selects chameleon dummy and inserts it in relevant dictionary entry.
GNCTBI	Converts from decimal to binary.
GNDRTA	Analyzes dictionary type.
GNEND	Forms pointers and branches to routine GNEOP in text block storage.
GNEOB	Processes end-of-block marker.
GNEOP	End of program routine. Frees blocks and releases control.
GNFMID (IQ)	Identifies family member.
GNFUNC	Selects function for processing.
GNF04	Checks for nested function situation.
GNF027	Sets up result type of a PL/I function.
GNFM3 (IQ)	Replaces original reference in text.
GNGNCR	General conversion routine.
GNL06 (IQ)	Forms entry relating to particular invocation.
GNPLIG (IQ)	Forms table of family member descriptions.
GNPRSC (IP)	Selects highest mode, scale and precision of variable argument list.
GNSACH	Performs special argument check.
GNSAPC	Calculates scale and precision of a function result.
GNSAPR	Processes SUBSTR function and pseudo-variable arguments.

Table IM1. Phase IM Routine/Subroutine Directory (continued)

Routine/Subroutine	Function
GNSBAR	Handles a subscripted argument.
GNSBRT (IP)	Examines all three arguments of SUBSTR and calculates the resulting type exactly.
GNSFMS (IP)	Replaces references to SUBSTR in text by a reference to another entry giving detailed information about the arguments. Places a description of the resulting string in the text.
GNTRID	Scans source text.
GNXTRP	Gets next triple.
LST1 (IN)	Calculates type and length of result of string operation.
SUBSPT (IN)	Adds type of array to stack.

Table IT. Phase IT Post-Generic Processor

Statement or Operation Type	Main Processing Routine	Subroutines Used
Scans source text	PGTXSC	PGT01,PGEOB,PGEOP
Analyzes type of function detected	PGFUNC	None
Completes function handling	PGFNCP	PGNEXT
Detects 'chameleon' temporary references and deletes BUY and BUYS triples where possible	PGBUYS	PGBUY
Deletes 'chameleon' reference in an assignment triple and alters the argument triple to indicate an intermediate result	PGPASS	None
Deletes all other references to 'chameleon' temporaries where applicable	PGFNCM	PGBYAS,PGSELL

Table IT1. Phase IT Routine/Subroutine Directory

Routine/Subroutine	Function
PGASS	Deletes 'chameleon' assignments.
PGBYAS	Processes 'Buy Assignment' triples.
PGBUY	Processes BUY triples.
PGBUYS	Processes BUYS triples.
PGEOB	Deals with End of Text Block conditions.
PGEOP	Processes end of program marker.
PGFNCM	Replaces 'chameleon' reference by an intermediate result where applicable.
PGFNCP	Processes function prime marker.
PGFUNC	Analyzes function, and determines the type of processing required.
PGNEXT	Gets the next triple in source text.
PGSELL	Processes SELL triple.
PGTXSC	Scans text.
PGT01	Determines action to be taken for a significant triple.

Table IX. Phase IX Pointer and Area Checking

Statement or Operation Type	Main Processing Routine	Subroutines Used
Main scan routine	BUMP	TEST,ERASER

Table IX1. Phase IX Routine/Subroutine Directory

Routine/Subroutine	Function
BUMP	Scan routine.
TEST	Tests operands for pointer and area data types
ERASER	Processes bad statements.

Table JD. Phase JD Constant Expression Evaluator

Statement of Operation Type	Main Processing Routine	Subroutines Used
Initializes phase, gets scratch etc.	INIT1	None
Scans text, for constant triples	SCANT	MORTXT, PREFIX, CONCAT
Handles stacking/unstacking of operands	STAKOP	UNSTAK

Table JD1. Phase JD Routine/Subroutine Directory

Routine/Subroutine	Function
CONCAT	Detects constant string operands, performs concatenation, makes new disk entry, and puts ref. in a slot for stacking.
INIT1	Gets scratch core for the stack, initializes slots and switches.
MORTXT	Gets next text block, resets pointer.
OUT	Puts out error message and aborts compilation if stack is not emptied.
PREFIX	Detects unary prefixed constant, makes new list entry and puts ref. in a slot, for stacking.
SCANT	Main scan routine.
STAKOP	Push down stack handler.
TRYFLAG	Tests if stack is full, and if so, aborts.
UNSTAK	Moves entry from the stack.
UPTXT	Updates text pointer.
WINDUP	Releases scratch core and returns control to the control phase.

Chart 06. Aggregates Logical Phase Flowchart

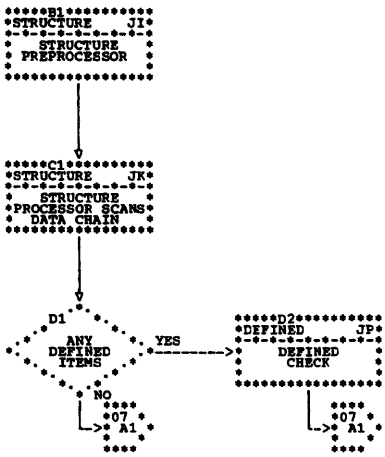

Chart JI. Phase JI Overall Logic Diagram

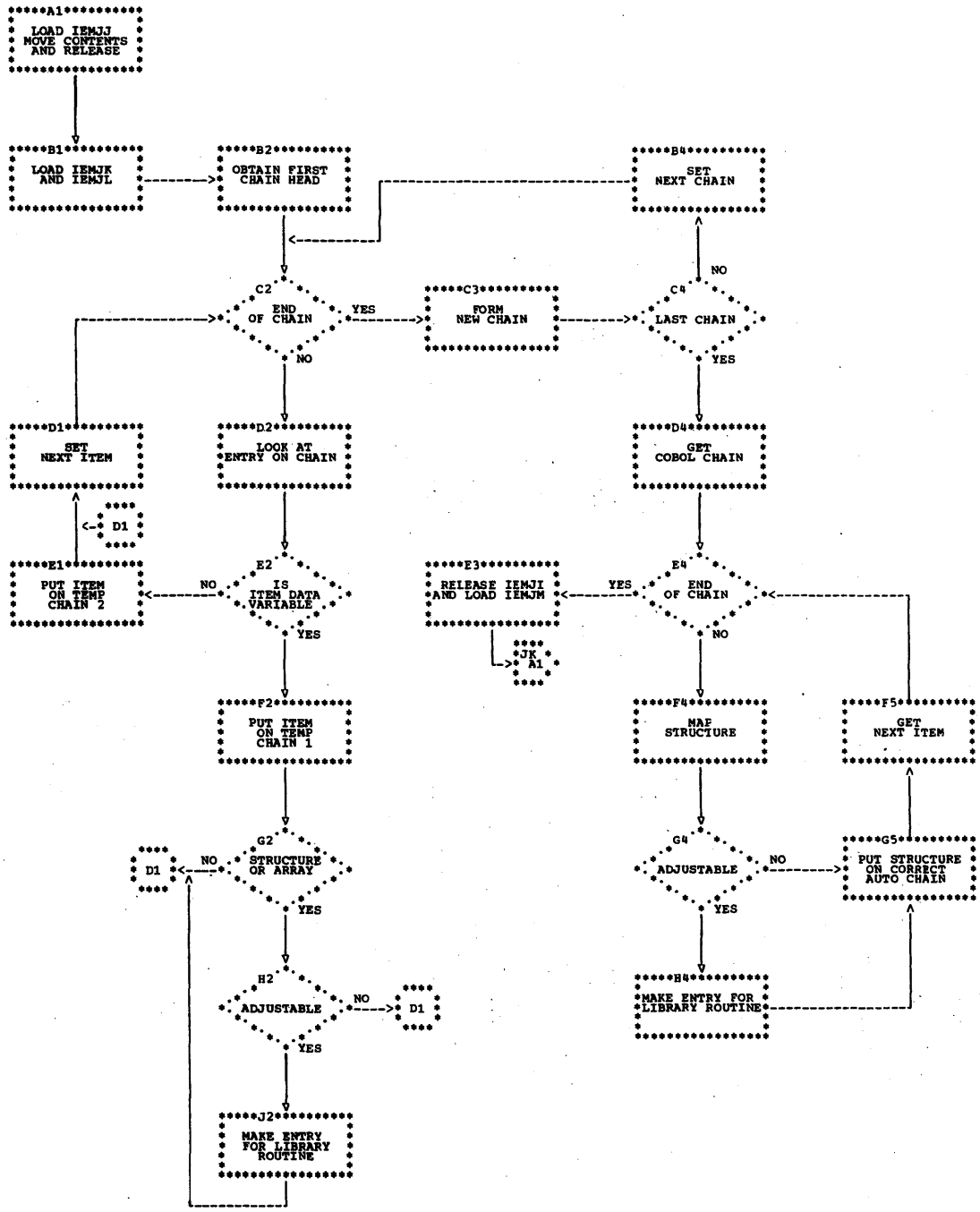

Chart JK. Phase JK Overall Logic Diagram

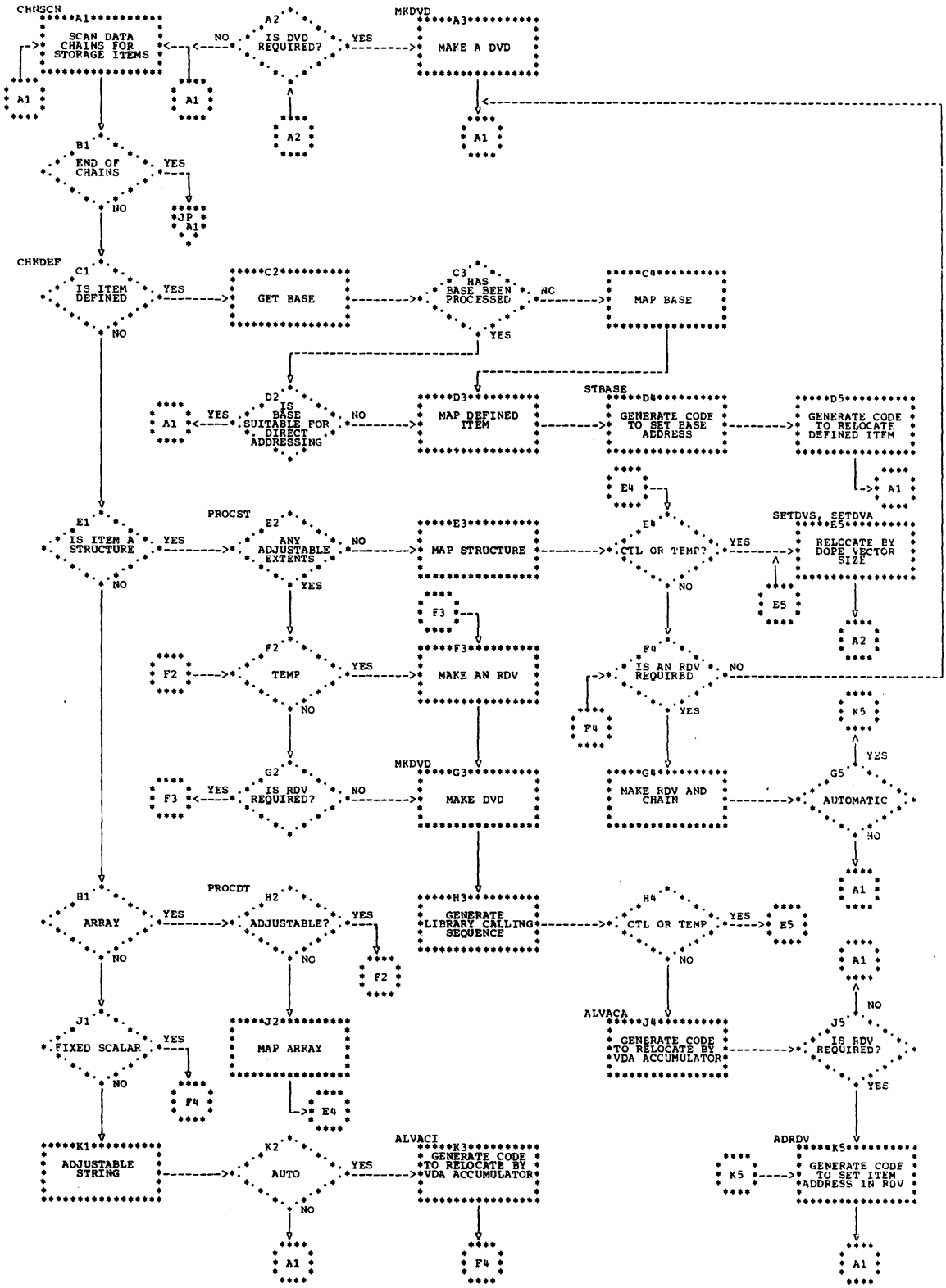

• Chart JP. Phase JP Overall Logic Diagram

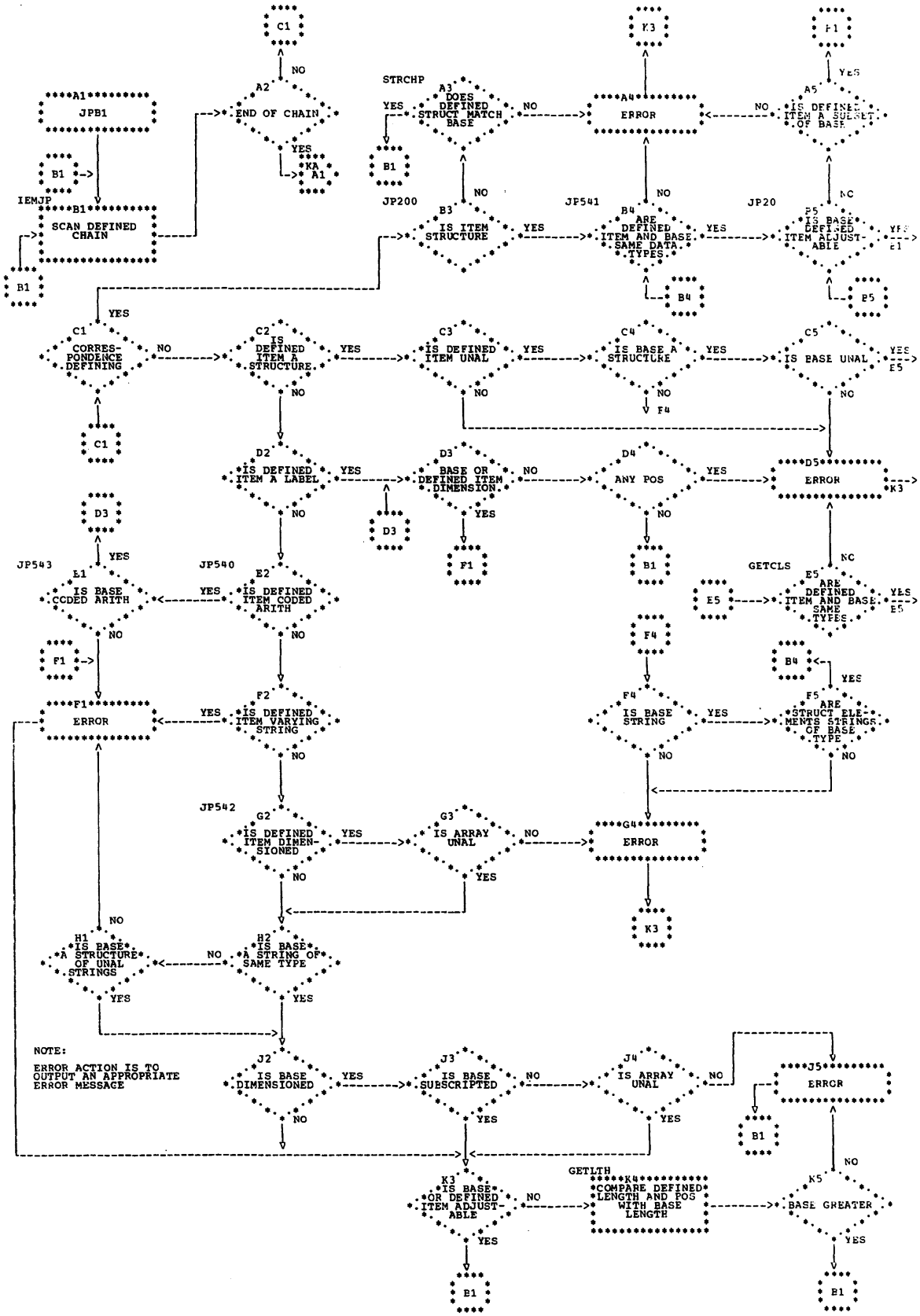

Table JI. Phase JI Aggregates Structure Processor

Statement or Operation Type	Main Processing Routine	Subroutines Used
To re-order the STATIC AUTOMATIC and CONTROLLED chains and to process structures	SCANA	MAP,MAPA
To scan down the COBOL chain for COBOL-mapped structures	SCAN	MAP
To transfer items from the COBOL chain to the appropriate AUTOMATIC chain	RECHAN	None
To transfer control from IEMSI to IEMJM	TERMIN	None
To map COBOL structures	MAP	NXTRF1,NXTRF2
To check non-COBOL structures for constant length	MAPA	None
To find the next member of a structure	NXTRFI	None
To find tne next element of a structure	NXTRF2	None

Table JI1. Routine/Subroutine Directory

Routine/Subroutine	Function
MAP	To map COBOL structures
MAPA	To check non-COBOL structures for constant length
NXTRF1	To find the next member of a structure
NXTRF2	To find the next element of a structure
RECHAN	To transfer items from the COBOL chain to the appropriate AUTOMATIC chain
SCAN	To scan down the COBOL chain for COBOL-mapped structures
SCANA	To reorder the STATIC, AUTOMATIC, and CONTROLLED chains and process structures
TERMIN	To transfer control from IEMJI to IEMJM

Table JK. Phase JK Aggregates Structure Processor

Statement or Operation Type	Main Processing Routine	Subroutines Used
Scans AUTOMATIC, STATIC, and CONTROLLED chains	CHNSCN	ADRDV, CHKDEF, MKDVD, MKRDV, PROCDT, PROCST, SETBRF, TERMWS
Processes DEFINED items	CHKDEF	CMPIL1, INOBJ, PROCDT, PROCST, STBASE
Processes structures (calculates offsets, multipliers, sizes, alignments and padding; generates object code)	PROCST	CMPIL1, INOBJ, ELSIZ
Processes arrays (calculates multipliers and generates object code	PROCDT	CMPIL1, INOBJ, LOADCN, SP54
Calculates storage offsets for adjustable items in structures	PS25	CMPIL1
Calculates storage offsets for adjustable arrays	ALVACA	CMPIL1
Calculates storage offsets for adjustable strings	ALVACI	CMPIL1
Generates code to initialize string dope vectors for arrays of varying strings in structures	SVARY	CMPIL1, INOBJ, IPDV, VOBJC
Generates code to initialize string dope vectors for varying, non-structured arrays	VOBJC	CMPIL1, INOBJ, IPDV
Generates code to calculate the starting address of storage for overlay defined items	STBASE	CMPIL1
Adds text skeletons to the output stream	CMPIL1	None
Makes dictionary entries for dope vector descriptions	MKDVD	ELSIZ
Makes dictionary entries for record description vectors	MKRDV	MKCNST, CMPIL1
Generates code to set the address in a record description vector at object time	ADRDV	INOBJ, CMPIL1
Calculates the length and alignment of scalar data items	ELSIZ	None
Sets offsets for BASED variables	BASED	None

Table JK1. Phase JK Routine/Subroutine Directory

Routine/Subroutine	Function
ADRDV (JL)	Generates addressing code for AUTOMATIC RDVs.
ALVACA (JL)	Calculates storage offsets for adjustable arrays.
ALVACI (JL)	Calculates storage offsets for adjustable strings.
BASED	Sets offsets for BASED variables.
CHKDEF (JM)	Processes DEFINED items.
CMPIL1 (JL)	Adds text skeletons to the output stream.
ELSIZ	Determines size of storage required for structure base elements.
INOBJ (JL)	Initializes object code statements.
IPDV (JM)	Generates code to set up primary dope vectors.
LOADCN (JL)	Generates object code to load object registers with constants known at compile time.
MKDVD	Makes dictionary entries for DVDs.
MKRDV (JM)	Makes dictionary entries for RDVs.
NXTREF/NXTRF1 (JM)	Gets the next structure base reference.
PROCDT (JM)	Processes arrays.
PROCST	Processes structures.
PS25	Calculates storage offsets for adjustable items in structures.
CHNSCN (JL)	Scans AUTOMATIC, STATIC, and CONTROLLED chains.
SETBRF (JL)	Sets the reference to the current entry type 1.
SETDVS	Sets the dynamic dope vector size for non-adjustable structures.
SP54	Calculates base element multiples.
STBASE (JM)	Generates code to initialize starting address storage for overlay defined items.
SVARY (JL)	Generates code to initialize string dope vectors for arrays of varying strings in structures.
TERMWS (JL)	Terminates object code.
VOBJC (JL)	Generates code to initialize string dope vectors for varying, non-structured arrays.

Table JP. Phase JP Translator Defined Check

Statement or Operation Type	Main Processing Routine	Subroutines Used
Scans DEFINED chain; checks validity	IEMJP	GETCLS, GETLTH, STRCMP
Checks that two structure descriptions are the same and that they may be validly overlaid	STRCMP	None

Table JP1. Phase JP Routine/Subroutine Directory

Routine/Subroutine	Function
GETCLS	Analyzes structure descriptions, and checks that all elements are of the same defining class.
GETLTH	Obtains length of string or numeric field from associated dictionary entry.
IEMJP	Controlling scan of DEFINED chain; checks validity.
JP8	Tests whether defined item is packed.
JP20	Tests whether base defined item is adjustable.
JP200	Tests whether item is a structure.
JP540	Tests whether defined item is coded arithmetic.
JP541	Compares base and defined item.
JP542	Tests whether defined item is dimensioned.
JP543	Tests whether base code is arithmetic.
STRCMP	Compares structure descriptions.

Table JZ. Module JZ Compiler Control

Function	Main Processing Routine	Routines Used
Reconstructs the phase directory for the second half of the compiler Entry to OS/360: BLDL	IEMJZ	RLSCTL, ZUPL, ZEND

• Chart 07. Optimization Logical Phase Flowchart

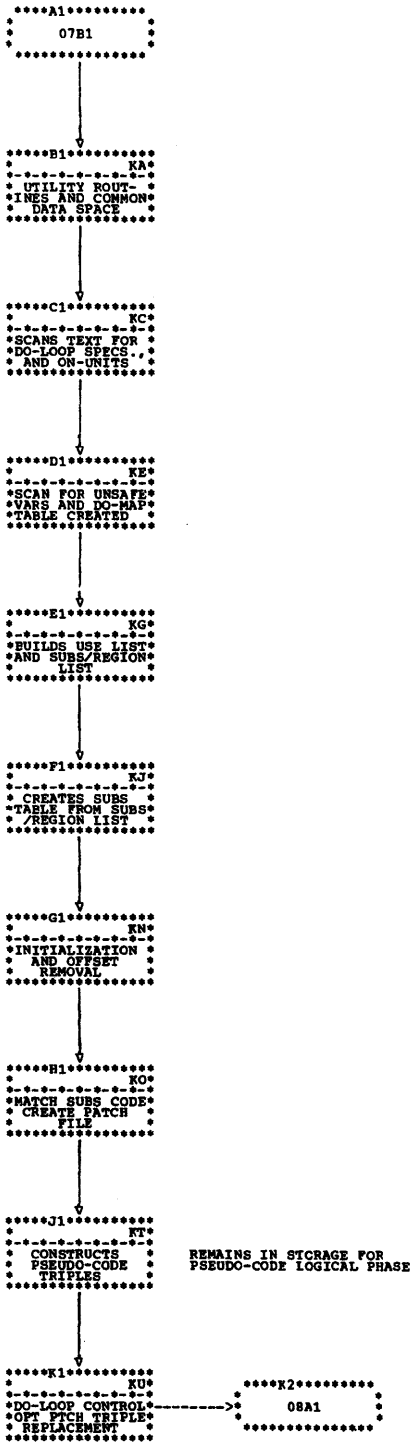

• Chart KA. Phase KA Overall Logic Diagram

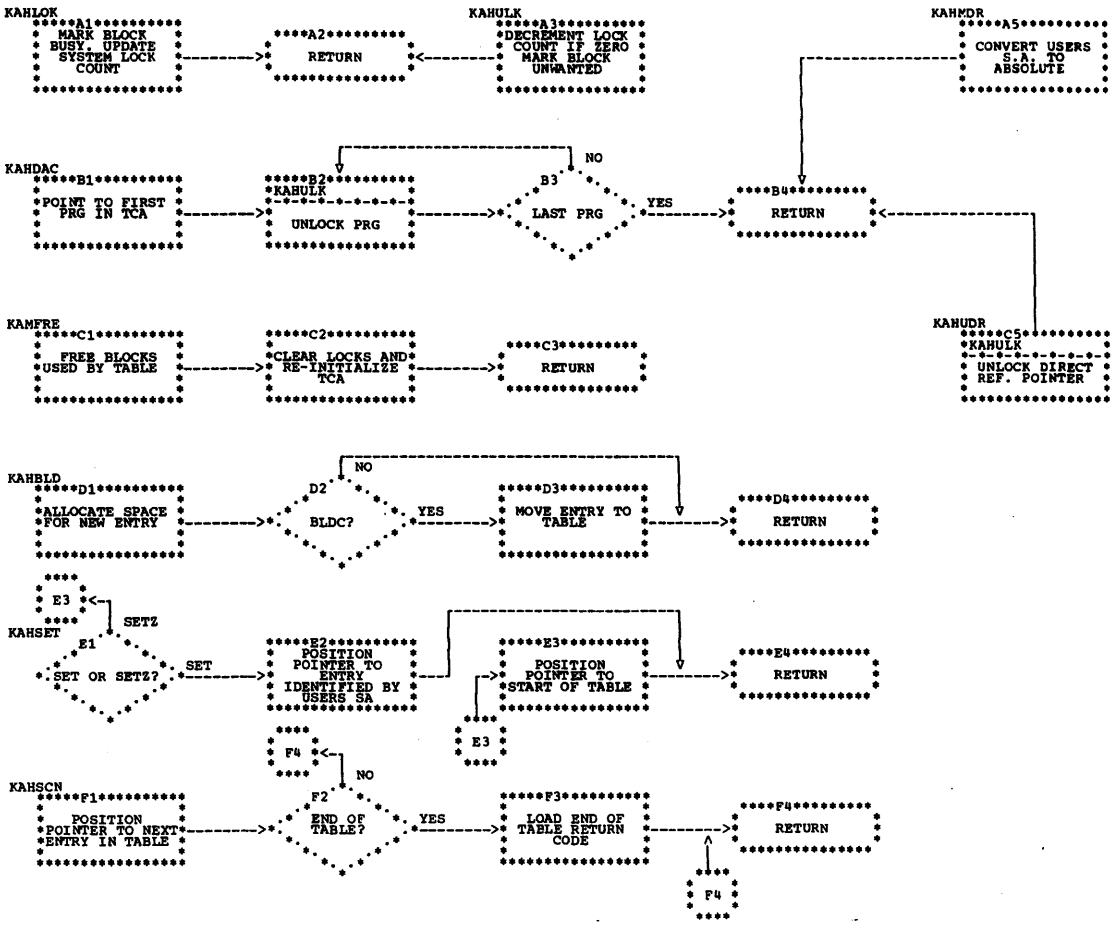

• Chart KA. Phase KA Overall Logic Diagram (continued)

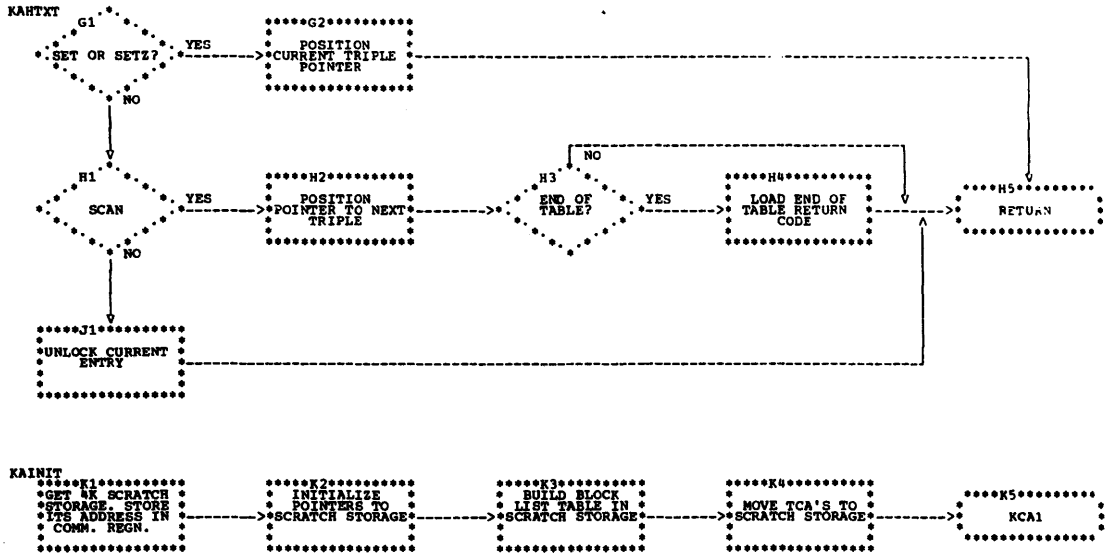

• Chart KC. Phase KC Overall Logic Diagram

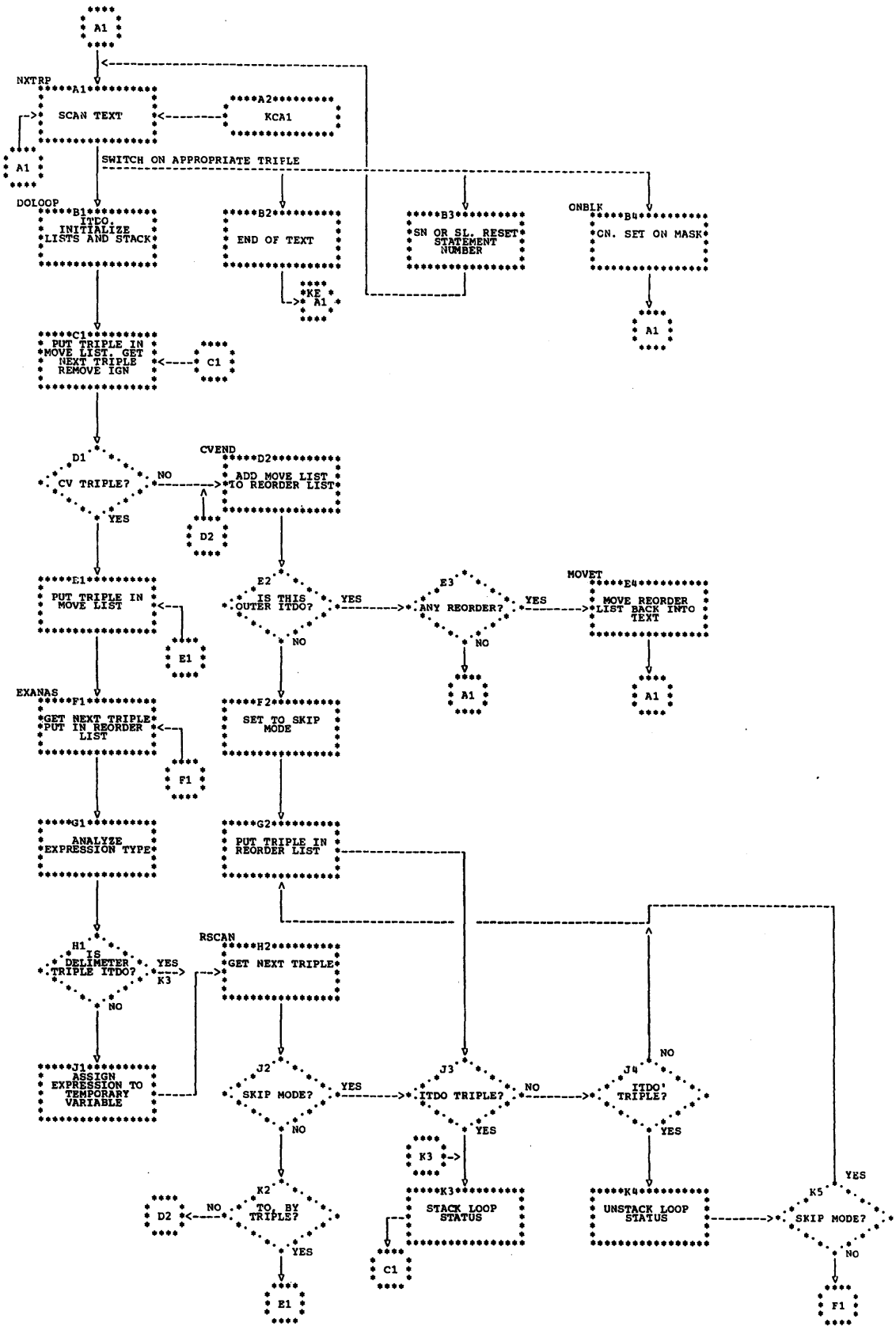

● **Chart KE. Phase KE Overall Logic Diagram**

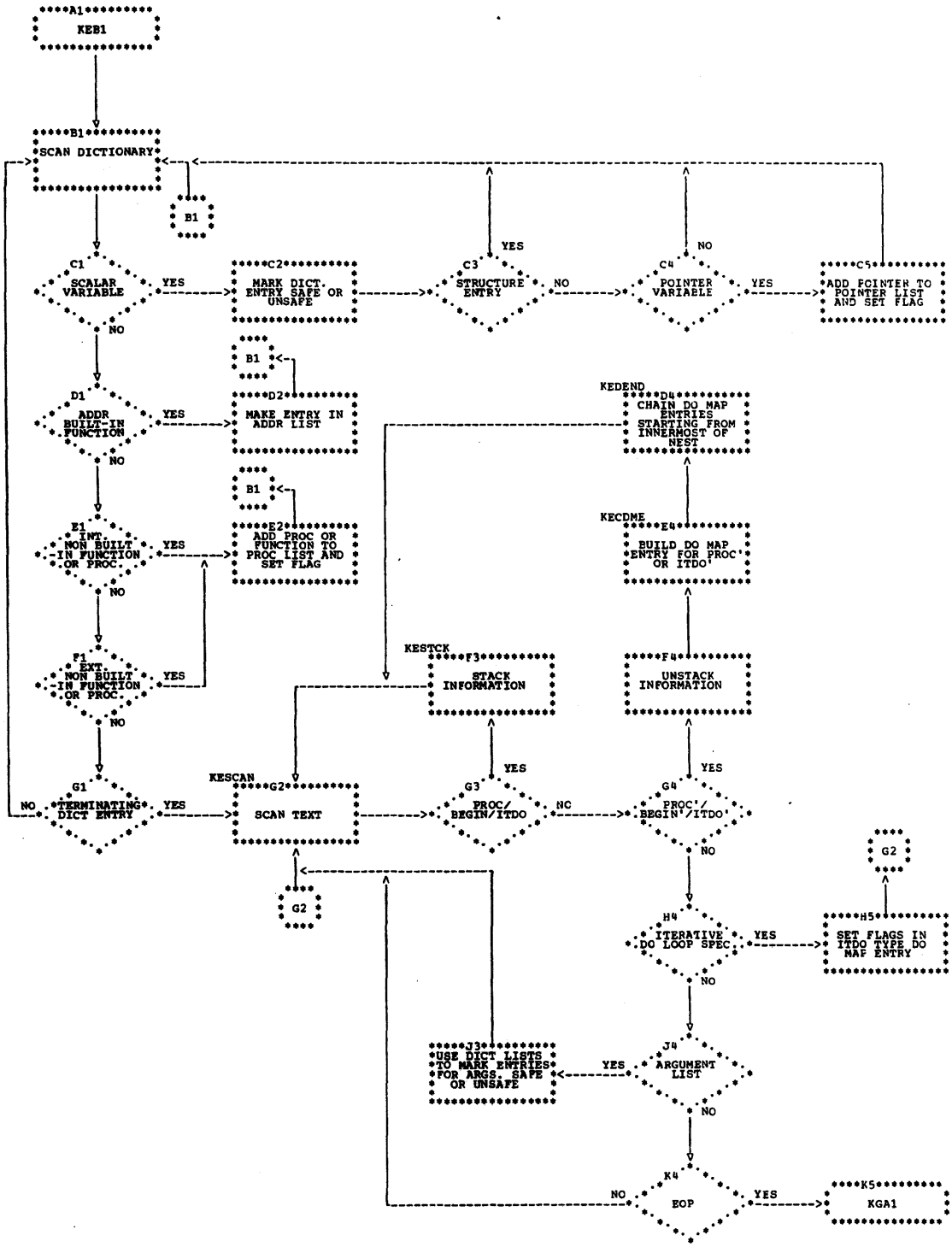

• Chart KG. Phase KG Overall Logic Diagram

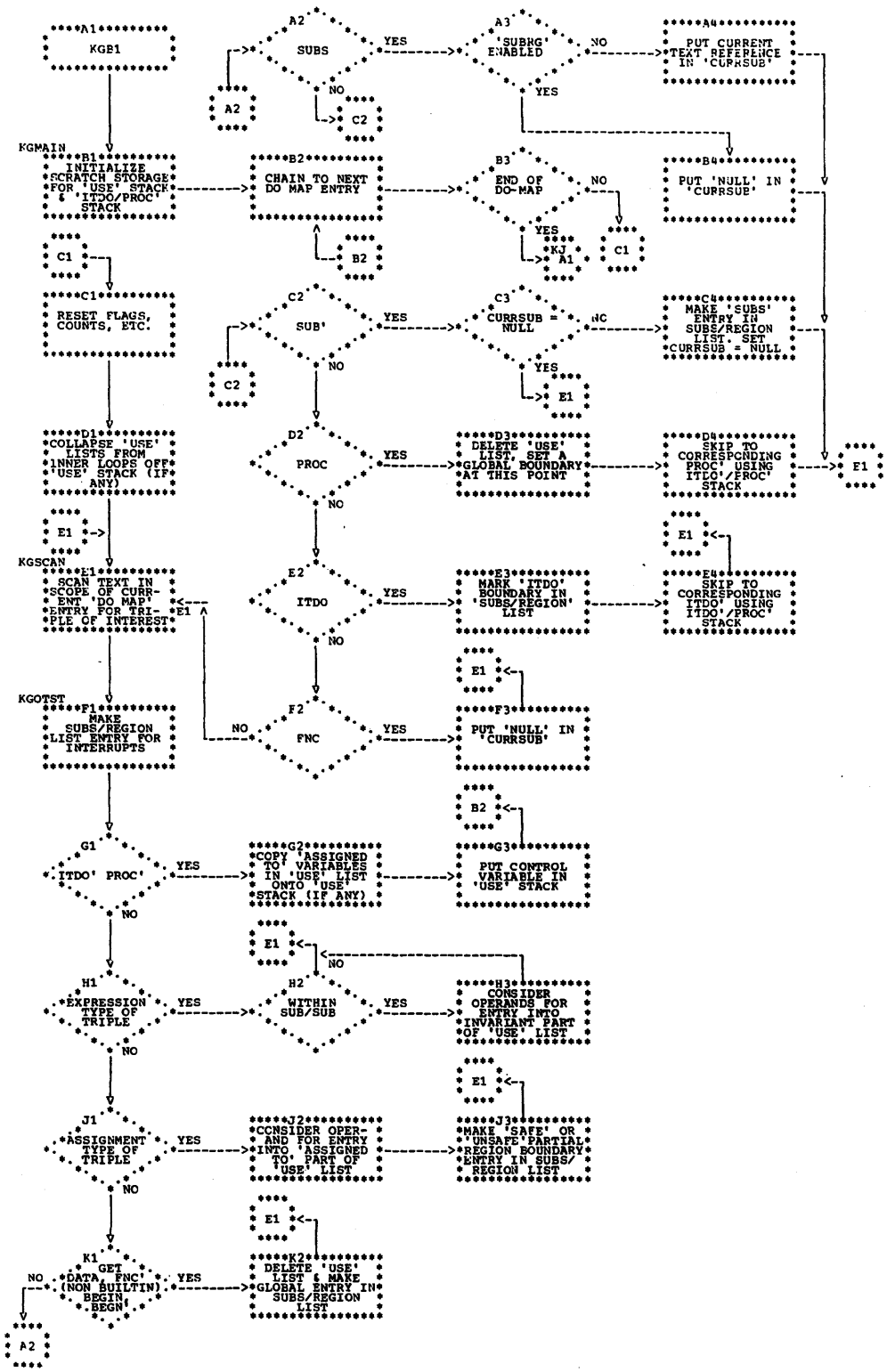

● Chart KJ. Phase KJ Overall Logic Diagram

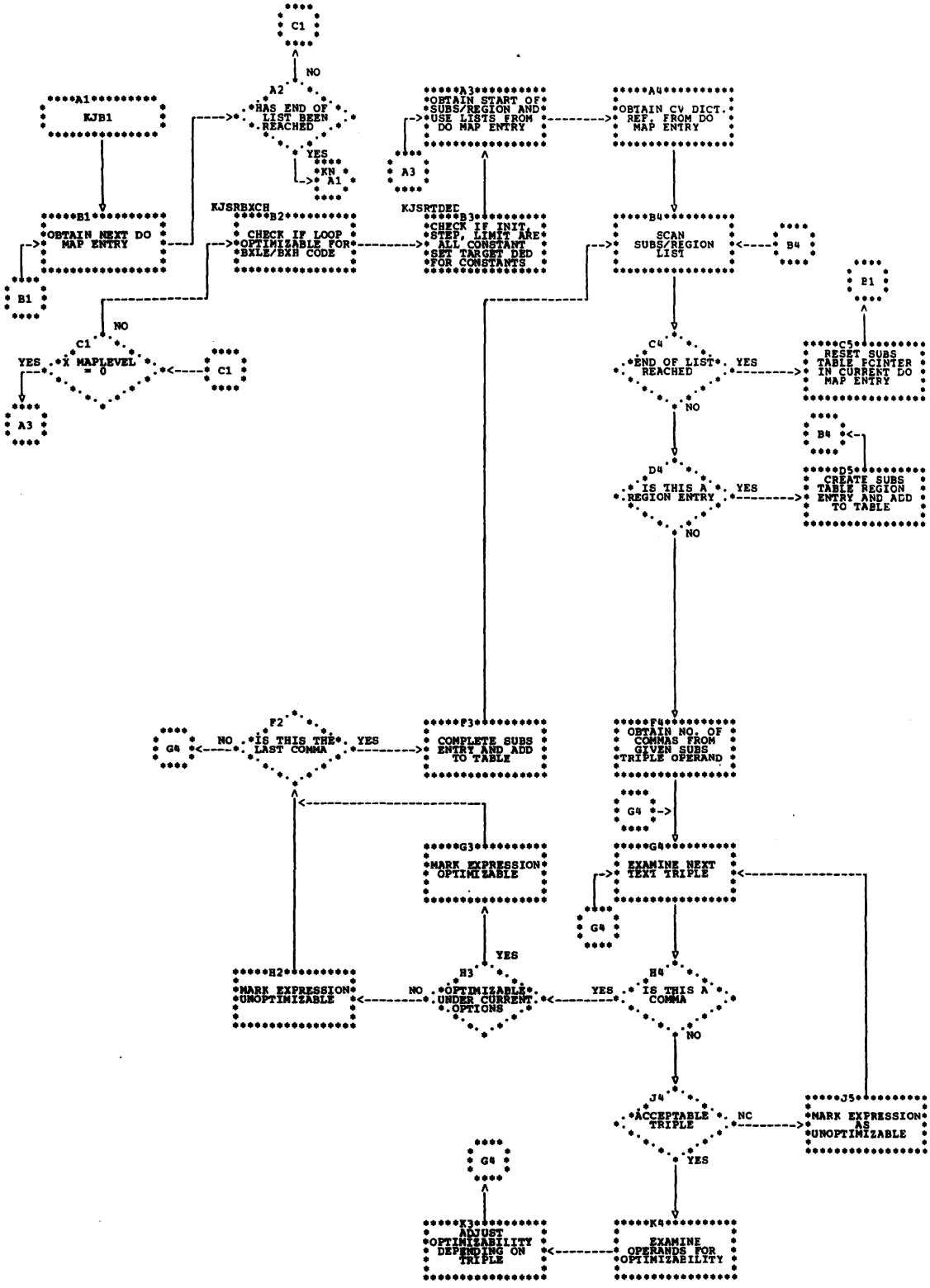

● Chart KN. Phase KN Overall Logic Diagram

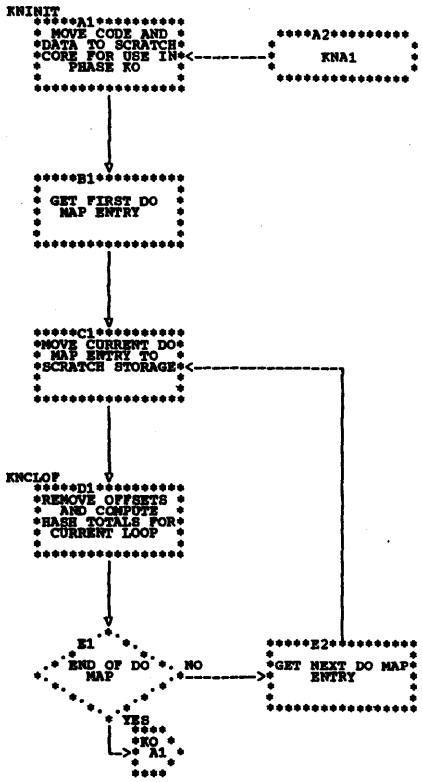

● Chart KO. Phase KO Overall Logic Diagram

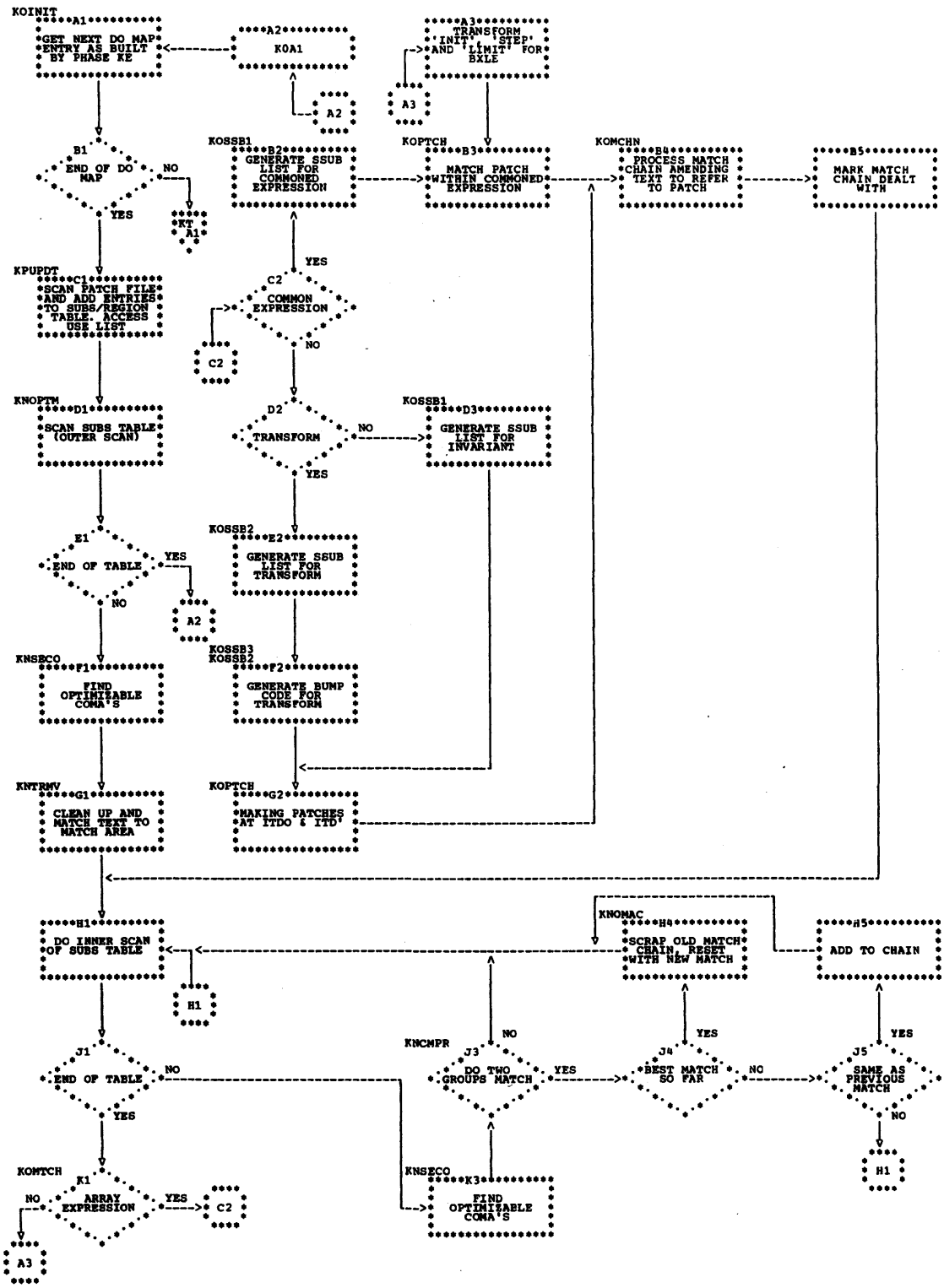

• Chart KT. Phase KT Overall Logic Diagram

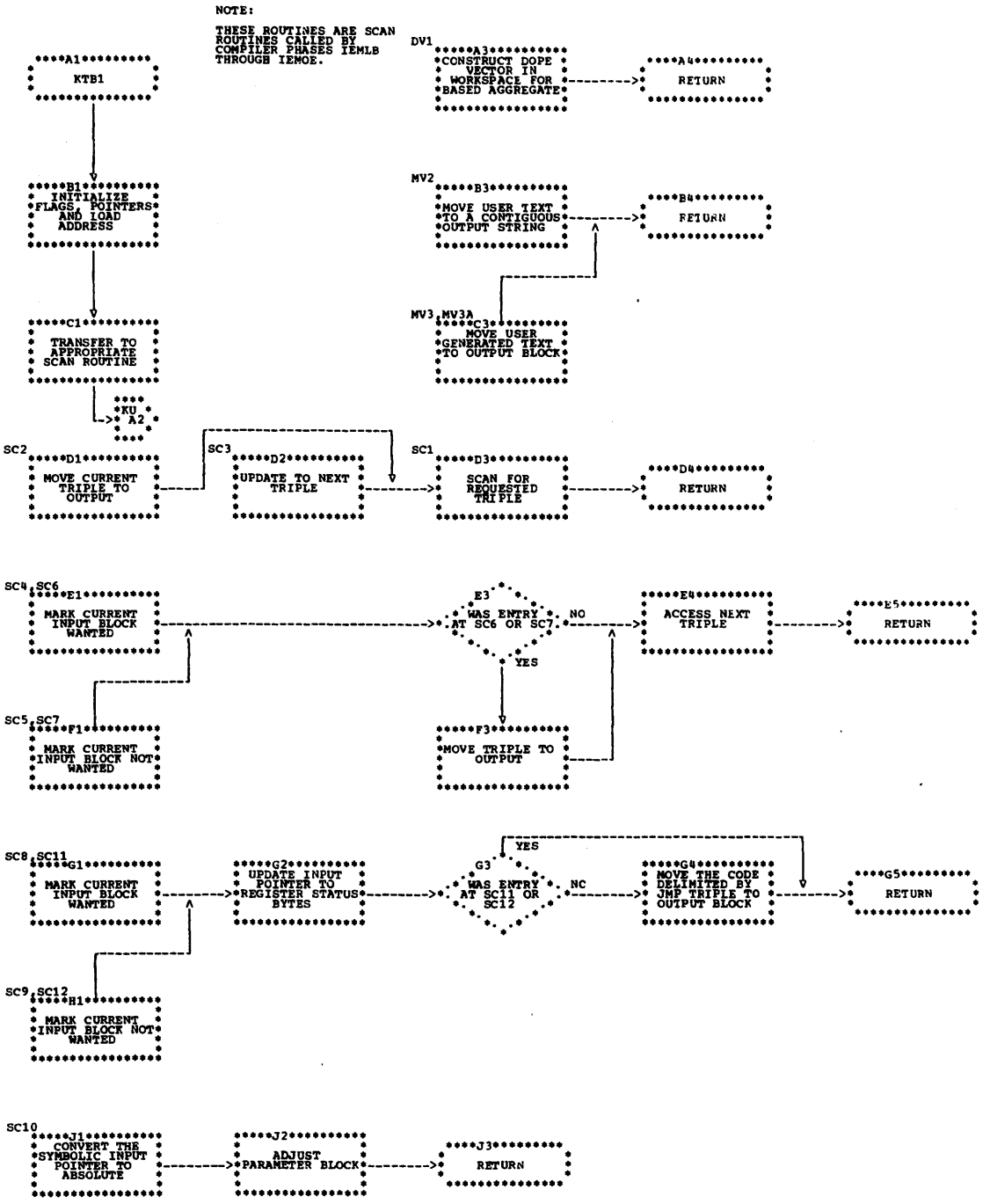

● Chart KU. Phase KU Overall Logic Diagram

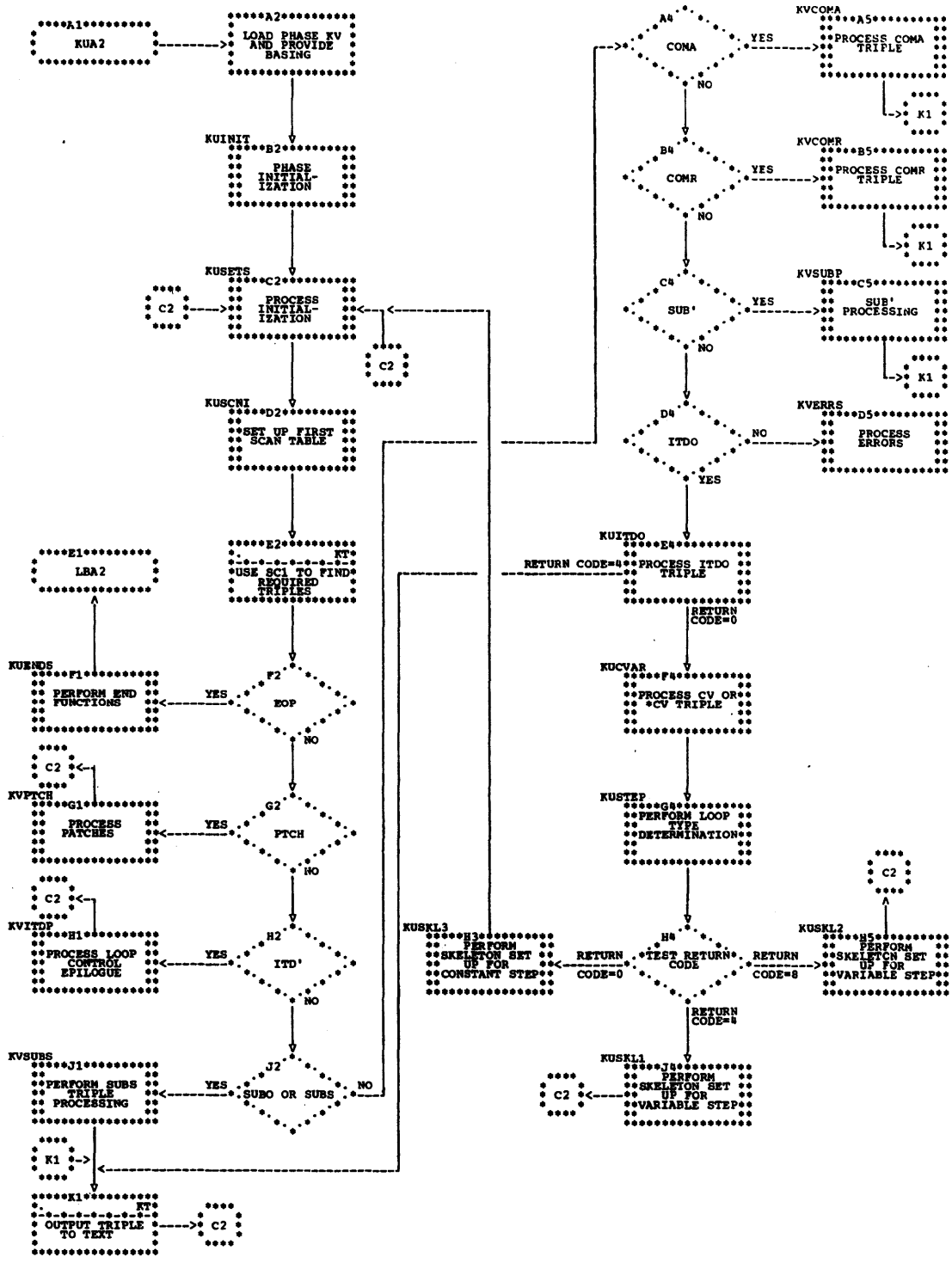

● Table KA. Phase KA Resident Control Module

Statement or Operation Type	Main Processing Routine	Subroutines Used
Handles KTAB BLDC/T operations	KAHBLD	ZTXTAB, KAHLOK, KAHULK, ZUTXTC, KAHERR
Handles KTAB DR operation	KAHMDR	KAHERR, ZTXTAB, ZALTER, KAHULK
Handles KTAB ULDR operation	KAHUDR	KAHULK
Handles KTAB DEACT operation	KAHDAC	KAHULK
Handles KTAB FREE operation	KAHFRE	KAHERR, ZALTER
Handles KTAB SCAN operation for non-text tables	KAHSCN	KAHERR, KAHLOK, ZTXTAB, KAHULK
Handles KTAB SET/SET Z operations	KAHSET	KAHERR, KAHULK
Place save area stack, DTCAs and block list table in scratch storage	KBSTUP(KB)	None

● Table KA1. Phase KA Routine/Subroutine Directory

Routine/Subroutine	Function
KAHBLD	Handles KTAB BLDC/T operations
KAHDAC	Handles KTAB DEACT operation (non-text tables)
KAHERR	Produces error message and aborts
KAHFRE	Handles KTAB FREE operation
KAHLOK	Locks a table entry
KAHMDR	Handles KTAB DR operation (non-text tables)
KAHSCN	Handles KTAB SCAN operation (non-text tables)
KAHSET	Handles KTAB SET/SETZ operations (non-text tables)
KAHTXT	Handles all KTAB operations on text tables
KAHUDR	Handles KTAB ULDR operation
KAHULK	Unlocks a table entry
KBSTUP (KB)	Places save area stack, DTCAs and block list table in scratch storage

- Table KC. Phase KC Do-Loop Specification Scan

Statement or Operation Type	Main Processing Routine	Subroutines Used
General text scan	NXTRP	SCAN (KA), DOLOOP, ONBLK
Sets ON mask for ON unit	ONBLK	SCAN (KA)
Initializes reordering scan after ITDO triple	DOLOOP	SCAN (KA), EXANAS, CVEND, MOVE, MOVER
Analyzes expression in loop specification	EXANAS	SCAN (KA), MOVER, RSCAN
Scans for ITDO nested in loop specification	RSCAN	SCAN (KA), MOVER
Completes reordering scan at end of loop specification	CVEND	SCAN (KA), RSCAN, MOVER, MOVET

- Table KC1. Phase KC Routine/Subroutine Directory

Routine/Subroutine	Function
CVEND	Completes reordering scan at end of loop specification
DOLOOP	Initializes reordering scan after ITDO triple
EXANAS	Analyzes expression in loop specification
MOVE	Puts triple into MOVE list
MOVER	Puts triple into REORDER list
MOVET	Moves REORDER list into text
MXTRP	General text scan
ONBLK	Sets ON mask for occurrence of ON unit
RSCAN	Scans for ITDO nested in loop specification
SCAN (KA)	Scans text

- Table KE. Phase KE Dictionary Scan and DO-Map Build

Statement or Operation Type	Main Processing Routine	Subroutines Used
Initialization	KEINIT	KCDS, KESCAN, HTAB
Dictionary scan marking unsafe variables	KCDSIN	HTAB, ZDICRF, ZDRFAB, ZDABRF
Scans text and passes control to triple processing routines	KESCAN	KTAB

• Table KE1. Phase KE Routine/Subroutine Directory

Routine/Subroutine	Function
KCDSIN	Dictionary scan marking unsafe variables
KECDME	Creates a DO-Map entry
KEDEND	Completes the DO-Map entry
KEERRH	Produces termination error message and aborts
KEINIT	Initialization
KELKUP	Scans list of procedures and pointers
KESCAN	Scans text calling triple processing routines
KESTCK	Makes entry in stack

• Table KG. Phase KG DO Examine Phase

Statement or Operation Type	Main Processing Routine	Subroutines Used
Main processing routine	KGMAIN	KGSCAN, KGSRGL, KGSORT, KGUSEN
Tests whether an ON-unit could be entered as a result of an interrupt occuring at the triple being considered	KGOTST	KGSRGL
Transfers control to appropriate triple routine	KGSCAN	KGERRR
Considers a variable for entry into the USE list	KGUSEL	KGUSEN

• Table KG1. Phase KG Routine/Subroutine Directory

Routine/Subroutine	Function
KGDEIT	Deletes non-compiler-created temporaries from USE list
KGDELU	Deletes unsafe variables from USE list
KGERRR	Produces a termination error message and aborts
KGMAIN	Main processing routine
KGNICE	Checks that a dictionary reference is for a real fixed binary scalar integer variable
KGOTST	Tests whether an ON-unit could be entered from the triple being considered
KGSCAN	Transfers control to appropriate triple routine
KGSORT	Sorts the USE list so that invariant variables appear first
KGSRGL	Makes an entry in the SUBS/REGION list
KGUSEL	Considers a variable for entry into the USE list
KGUSEN	Makes an entry in the USE list

● Table KJ. Phase KJ Subscript Table Build

Statement or Operation Type	Main Processing Routine	Subroutines Used
To build the SUBS TABLE from the Subs/Region List and test the loop initial, step, and limit for use in BXLE and BXH code	KJSB	KJSRBXCH, KJSRCHKP, KJSRSOPC, KJSRTDED, ZDRFAB, KTAB

● Table KJ1. Phase KJ Routine/Subroutine Directory

Routine/Subroutine	Function
KJSB	Builds SUBS TABLE from Subs/Region List and tests the loop initial, step, and limit, for use in BXLE and BXH code
KJSRBXCH	Checks that current loop is optimizable for BXLE, BXH loop control code
KJSRCHKP	Sets a series of flags stating the attributes of the expression being analyzed
KJSRSOPC	Sets a series of flags stating the attributes of a given triple operand within the context of the expression analysis
KJSRTDED	Sets the target DED in the dictionary entry for a constant to be used in BXLE/BXH code. If necessary, new data dictionary entries are created and the reference in text modified.
KJSRUSEL	Searches the given USE list for a given variable
KODECN	Tests a given dictionary entry for a REAL, FIXED, BINARY, SCALAR, INTEGER variable, or a BINARY or DECIMAL INTEGER constant
KONICE	Tests that a given variable is REAL, FIXED, BINARY, SCALAR, INTEGER.
KOPRSN	Tests if a given dictionary reference is: 1. a variable of precision less than 30 bits or 2. a decimal constant of precision less than 8 digits or 3. a binary constant of less than or equal to 30 bits

• Table KN. Phase KN Subscript Optimization

Statement or Operation Type	Main Processing Routine	Subroutines Used
Sets up the physical phase KN data area, KNDATA in scratch storage. KNCODE, which is a group of lower level subroutines, is also moved into scratch storage. The scratch storage area is provided by KA. A scan is made of the chain of DO-map entries, and subroutine KNCLOF is called for each to remove offsets, and prepare potentially optimizable subscripts for matching.	KNINIT	KNCLOF
Scans the subs entries of the subs-region table for the loop. It cleans up potentially optimizable code, removes offsets, accumulating the total offset in the spare operand of the appropriate subs triples, and calculates hash values for optimizable COMA's.	KNCLOF	KNCOMU, KNHASH, KNANAL, KNOPTY
Accumulates hash total and computes hash for specified triple.	KNHASH	None
Analyzes the type of triple operand and sets a return code value accordingly.	KNANAL	ZDRFAB
Analyzes the type of triple operand and sets a return code value accordingly.	KNOPTY	ZDRFAB
Converts a decimal constant to binary and multiplies it with a given binary value. An option may be specified to allow conversion only of the given decimal constant to binary.	KNCOMU	ZDRFAB

• Table KN1. Phase KN Routine/Subroutine Directory

Routine/Subroutine	Function
KNANAL	Analyzes type of triple operand and sets a return code value accordingly.
KNCLOF	Scans subs entries of subs-region table for loop. Cleans up potentially optimizable code, removed offsets, and calculates hash values for optimizable COMA's.
KNCOMU	Multiplies decimal and binary values.
KNHASH	Accumulates hash total and computes hash for specified triple.
KNINIT	Sets up code and data areas in scratch storage, and scans chain of DO-map entries, calling KNCLOF to remove offsets.
KNOPTY	Analyzes type of triple.

- Table KO. Phase KO Subscript Optimization

Statement or Operation Type	Main Processing Routine	Subroutines Used
Initialization is performed for the phase. The next DO-map entry in processing sequence is obtained and put in scratch storage. Module KP and KQ are loaded, and the Subs/Region Table is updated from the patch file. The iterative specification and DO-map are checked in order to amend iterative specification. A subroutine is called to form a match chain in the Subs/Region Table, once for Transforms and Invariants and once for commoning. When end of DO-map is reached return is made to Compiler control	KOINIT	ZLOADX, RELESE, KTAB (Macro routines in KA), KNOPTM, KOBXCH, KPUPDT
The sindex number for the loop is set to zero. The routine looks at the DO-map entry and iterative specification triples and makes a patch over the ITDO and ITD' triples if BXLE/BXH is to be generated for the loop	KOBXCH	KTAB (Macro routines in KA), KOSNDX, KOPTCH
The match chain is processed and entries are made in the patch file. The patch entries contain optimized code for three types of subscript. Patches are also created for the BXLE/BXH code for optimized loop control	KOMTCH	ZDRFAB, ZDICRF, KTAB (Macro routines in KA), KOCVTX, KOSNDX, KOMAKC, KOPTCH, KOMCOM, KOMCHN, KOMOVE, KOSSB3, KOSSB2, KOSSB1
Creates part of patch for Transforms and Invariants. It is called from KOMTCH	KOMCOM	KOMOVE, KOPTCH
Makes an entry in the patch file from the patch build area. Options are available to move the patch data to the patch build area before making an entry in the patch file. Entries are chained together if they are to be inserted at the same point in text. A PTCH triple is placed in text at the point of insertion. The overwritten triple is placed in the patch	KOPTCH	KTAB (macro in KA), KOMOVE, KOPCOM

• Table KO. Phase KO Subscript Optimization (continued)

Statement or Operation Type	Main Processing Routine	Subroutines Used
Moves the triple to be overwritten into the patch and moves the patch into the patch file. The symbolic reference of the patch is moved to the PTCH triple in workspace. The triple in text is then overwritten with PTCH triple	KOPCOM	KOMOVE
The triples pointed to by the text references in the Subs/Region Table elements in the current match chain are amended to refer to a value calculated in patch code. The chain is then deleted and all COMA's processed are marked in the Subs/Region Table as dealt with and optimized	KOMCHN	KTAB (macro routines in KA)
Tests the type of triple at the address given and sets a return code accordingly	KNTRTY	none
Moves an item to the next available address in the patch build area in scratch storage	KOMOVE	none
Allocates a sindex register. The sindex register counter is incremented, the sindex available counter is decremented and the symbolic register counter is incremented	KOSNDX	ZUERR, ZABORT
The first part of a subs list, consisting of the SUBS triple and the COMA's before the first matched triple, is moved to the patch build area. The SUBS is changed to SSUB and a symbolic register number is placed in the second operand. A null value is inserted in the second operand of the COMA triples. All other triples are not moved	KOSSBS	KTAB (macro routines in KA), KOSNDX, KOMOVE
Moves the last part of a subs list, consisting of the COMA's between the last matched triple and the SUB' triple, to the patch build area. The SUB' is changed to SSB' and all COMA triples have their second operand set to null value. No other triples are moved	KOSSBE	KOMOVE

- Table KO. Phase KO Subscript Optimization (continued)

Statement or Operation Type	Main Processing Routine	Subroutines Used
Tests whether any operand in a list of triples is a reference to a control variable of the current loop	KOCVTX	KTAB (macro routines in KA), KNTRTY
The message 'Invalid input type V to optimizing phase KO' is put out	KOEROR	ZUERR, ZABORT
Moves a subscript list into the patch build area changing the SUBS/SUB' triples to SSUB/SSB'. All matched COMA expressions are copied with amendments as follows: (1) References to the control variable are replaced by references to the step. (2) All additive invariant parts of the expression are deleted. All unmatched COMA expressions are replaced by COMA - NULL	KOSSB3	KOSSBS, KNTRTY, KOMOVE, KOSSBE
A subscript list is moved to the patch build area with SUBS/SUB' changed to SSUB/SSB' triples. All matched COMA expressions are copied except the dictionary references to the control variable which are replaced by dictionary references to the 'initial' elements. All unmatched COMA expressions are replaced by COMA - NULL	KOSSB2	KNTRTY, KOMOVE, KOMAKC, KOSSBE, KOEROR, KOSSBS
A subscript list is moved into the patch build area with SUBS/SUB' triples changed to SSUB/SSB' triples. All matched COMA expressions are copied. All unmatched COMA expressions are replaced by COMA - NULL	KOSSB1	KOMOVE, KOSSBE, KOSSBS
Produces a binary constant, if it is possible, given as parameters the dictionary reference of two constants in the operands of a given triple. A dictionary entry is made for the new constant, the dictionary reference of which is an output parameter. A return code value is also given indicating whether or not such a constant has been created	KOMAKC	KOTSTO, KNTRTY, ZDICRF, KOADDC, KOSUBC, KOMLTC
A dictionary entry is obtained from the given dictionary reference and tested to see if it is for a decimal or binary integer constant. If it is, the effective precision is found and the constant is converted to binary if necessary	KOTSTO	ZDRFAB, KNCOMU, KOPREC

• Table KO. Phase KO Subscript Optimization (continued)

Statement or Operation Type	Main Processing Routine	Subroutines Used
Calculates the effective precision of the binary fullword given	KOPREC	none
A binary fullword result is obtained by multiplying together the two input binary values	KOMLTC	none
A binary fullword result is obtained by adding together the two input binary values	KOADDC	none
A binary fullword result is obtained by the subtraction of the two input binary values	KOSUBC	none
Converts a decimal constant to binary and multiplies it with a given binary value. An option may be specified to allow conversion only of the given decimal constant to binary	KNCOMU	ZDRFAB
Scans the subscript lists of a DO-loop looking for matching COMA's or COMA - expressions which are possible candidates for transforming, moving out of the loop as invariants, or commoning	KNOPTM	KTAB (macro routines in KA), KNSECO, KNTRMV, KNCHRG, KNCMPR, KNALRG, KNOMAC, KNMKVL, KOMTCH
Forward scans the Subs Table entry (equivalent to a backwards text scan) looking for the first group of COMA's that are optimizable as indicated by a switch	KNSECO	none
Analyzes the type of triple operand and sets a return code value accordingly	KNANAL	ZDRFAB
Clears the match chain	KNOMAC	KTAB (macro routines in KA)
Match area code is compared with text. The start point, finish point, and length of matched code is passed back. Only complete COMA's or COMA - expressions are matched	KNCMPR	KTAB (macro routines in KA)
Text between specified triples is scanned. Cleaned up triples are moved into scratch storage	KNTRMV	KTAB (macro routines in KA), KNTRTY, KNANAL, ZTXTAB, KNCOMU

● Table KO. Phase KO Subscript Optimization (continued)

Statement or Operation Type	Main Processing Routine	Subroutines Used
A list of dictionary references of all variables in operands of triples in a scratch work area is made. The list is terminated with a halfword of zeros. A flag is also set if any of the variables in the work area are unsafe	KNMKVL	KNANAL
A check is made to determine if the given region entry is an end region for commoning for the matched code in the scratch work area	KNCHRG	none
A check is made for region boundaries between specified subscripts	KNALRG	KTAB (macro routines in KA), KNCHRG
Controls the search through the patch file for SSUB triples and the subsequent processing of the restricted types of expressions found after the SSUB triples	KPUPDT	KTAB (macro routines in KA), KPSSUB
Shortened version of phase KJ. Processes those triples following a SSUB triple	KPSSUB	KTAB (macro routines in KA), ZDRFAB, KPCHKP
The USE list is searched to see if the given dictionary reference is contained in the list. A return code is set depending on the part of the USE list in which the reference is found	KPUSEL	KTAB (macro routines in KA)
Examines an operand of a triple and sets flags in a code byte giving the information required on the operand during the analysis of the expression within which it occurs	KPSOPC	ZDRFAB, KPUSEL
The operands of triples following a SSUB triple are examined to determine the type of expression under consideration	KPCHKP	KPSOPC

• Table KO1. Phase KO Routine/Subroutine Directory

Routine/Subroutine	Function
KNALRG	Checks region boundaries between specified subscripts
KNANAL	Analyzes type of triple
KNCHRG	Checks for end region for commoning
KNCMPR	Compares code in two matching areas
KNCOMU	Multiplies decimal and binary values
KNMKVL	Lists variables in scratch storage
KNOMAC	Clears the match chain
KNOPTM	Scans subscript lists of DO-loop for matching COMA's
KNOPTY	Analyzes type of triple
KNSECO	Scans Subs Table entry for optimizable group of COMA's
KNTRMV	Removes offsets, tidies up, and moves code to match area
KNTRTY	Tests triple type
KOADDC	Adds two binary values
KOBXCH	Checks DO-loop and patches over ITDO and ITD' triples
KOCVTX	Tests for reference to control variable
KOERROR	Aborts
KOINIT	Initialization for physical phase
KOMAKC	Creates binary constant
KOMCHN	Amends triples to refer to value in patch
KOMCOM	Creates part of patch for transforms and invariants
KOMLTC	Multiplies two binary values together
KOMOVP	Moves item to next place in patch build area
KOMTCH	Processes match chain and makes an entry in patch file
KOPCOM	Overwrites triple in text with PTCH triple
KOPREC	Obtains effective precision of binary value
KOPTCH	Makes an entry in the patch file

• Table KO1. Phase KO Routine/Subroutine Directory (continued)

Routine/Subroutine	Function
KOSBSC	Gets next entry from Subs/Region table
KOSNDX	Allocates a sindex register
KOSSBE	Moves last part of Subs list to patch build area
KOSSBS	Moves first part of Subs list to patch build area
KOSSB1	Moves a subscript list to patch build area
KOSSB2	Moves a subscript list to patch build area
KOSSB3	Moves a subscript list to patch build area
KOSUBC	Subtracts two binary values
KOTSTO	Tests if dictionary entry is for binary or decimal constant
KPCHKP	Checks operands of triples in SSUB list
KPSOPC	Sets a code byte after examining a triple operand
KPSSUB	Processes triples following a SSUB triple in a patch
KPUPDT	Searches patch file for SSUB lists
KPUSEL	Searches USE List for given dictionary reference

● Table KT. Phase KT Pseudo-Code Scan

Statement or Operation Type	Main Processing Routine	Subroutines Used
SCINIT Initialization	LA0005	UT01,UT02
SC1 Search for triple of interest	LA0010	UT01,UT03,UT06,UT07,UT08
SC2 Move current triple then search	LA0011	UT01,UT03,UT06,UT07,UT08
SC3 Delete current triple then search	LA0012	UT01,UT03,UT06,UT07,UT08
SC4 Skip current triple - text wanted	LA0020	UT06
SC5 Skip current triple - text free	LA0021	UT06
SC6 Move current triple - text wanted	LA0025	UT03,UT06
SC7 Move current triple - text free	LA0026	UT03,UT06
SC10 Symbolic input pointer to absolute	LA0035	UT01
SC11 Skip pseudo-code - text wanted	LA0040	UT06
SC12 Skip pseudo-code - text free	LA0041	UT06
MV2 Move user pseudo-code to contiguous OP	LA0050	UT04
MV3 Move user pseudo-code to OP	LA0055	UT04
MV3A Move user triples to OP	LA0056	UT03
DV1 Generate dope vector for based aggregate	LA0070	UT07,UT10,UT11

● Table KT1. Phase KT Routine/Subroutine Directory

Routine/Subroutine	Function
DV1	Generate dope vector for based aggregate.
MV2	Move user pseudo-code to contiguous output text.
MV3	Move user pseudo-code to output.
MV3A	Move user triples to output.
SCINIT	Initialize input and output text blocks.
SC1	Searches for triple of interest to user as indicated by TRT table.
SC2	Move current triple to output then search for triple of interest to user.
SC3	Delete current triple then search for triple of interest to user.
SC4	Skip over current triple and mask input WANTED.
SC5	Skip over current triple and mark input FREE.
SC6	Move current triple to output and mark input WANTED.
SC7	Move current triple to output and mark input FREE.
SC8	Move input pseudo-code to output and mark input WANTED.
SC9	Move input pseudo-code to output and mark input FREE.
SC10	Convert symbolic input pointer to absolute.
SC11	Skip over input pseudo-code and mark input WANTED.
SC12	Skip over input pseudo-code and mark input FREE.
UT01	Get a new input text block.
UT02	Get a new output text block.
UT03	Move pseudo-code to output.
UT04	Move triples to output.
UT05	Move text to output.
UT06	Test for end of block and chain to next block if necessary.
UT07	Convert dictionary reference to absolute.
UT08	Move input pseudo-code to output.
UT10	Set adjustable bound values in a dope vector.
UT11	Convert output text references to absolute.

● Table KU. Phase KU DO-loop Control and Merge Patches

Statement or Operation Type	Main Processing Routine	Subroutines Used
The phase KU control routine. This is highest level routine in phase	KUMAIN	MV3A(KT) + all routines in modules KU and KV except KVJUMP, KVSSUB, KVSSBP
Phase initialization	KUINIT	ZLOADW, ZUGC, SCINIT(KT)
Processing initialization performed before each return to main scan	KUSETS	none
Primary phase scan of text	KUSCN1	SC3(KT), SC1(KT)
Secondary scan of DO-loop specification elements only	KUSCN2	SC3(KT), KVERRS
ITDO triple test routine. Loops that are optimizable are detected	KUITDO	KVERRS
CV and *CV triple processing routine	KUCVAR	SC5(KT), ZDRFAB, KVERRS
Determination of type of step	KUSTEP	ZDRFAB
Fill in loop control skeleton for variable step with no sindex registers	KUSKL1	ZDICRF, MV3A(KT), MV3(KT)
Fill in loop control skeleton for variable step with sindex registers	KUSKL2	MV3A(KT), MV3(KT)
Fill in loop control skeleton for constant step	KUSKL3	MV3A(KT), MV3(KT)
Phase finish. Release scratch storage KV and patch file. Return to control	KUENDS	ZURC, RLSCTL, KVERRS
Patch triple processing routine. Each patch is located and inserted	KVPTCH	ZTXTAB, MV3A(KT), KVSSUB, KVERRS KVITDP, KVSSBP, KVCOMA, KVCOMR, KVJUMP
Process all COMR triples	KVCOMR	none
Process all COMA triples	KVCOMA	none
Process JUMP triples. Used only while processing a patch	KVJUMP	MV3(KT)
Process SSUB triple. Used only while processing a patch	KVSSUB	ZDRFAB, ZTXTRF
Process SSB' triples. Used only while processing a patch	KVSSBP	ZTXTAB

● Table KU. Phase KU DO-loop Control and Merge Patches (continued)

Statement or Operation Type	Main Processing Routine	Subroutines Used
SUBS and SUBO triple processing routine	KVSUBS	ZDRFAB, ZTXTRF, MV3A(KT)
SUB' triple processing routine	KVSUBP	ZTXTAB
ITD' triple processing. Insert epilogue into text for optimizable loops	KVITDP	MV3(KT), MV3A(KT)
Set up phase error message number and parameters	KVERRS	ZUERR, ZABORT
Search register alias table for SSUB register	KVALAS	None

● Table KU1. Phase KU Routine/Subroutine Directory

Routine/Subroutine	Function
KUCVAR	Processes CV and *CV triple in optimizable loop
KUFNDS	Phase finish. Releases KV, scratch storage and patch text
KUINIT	Initializes phase KU processing
KUITDO	Detects DO-loops flagged as optimizable
KUMAIN	Phase KU control routine
KUSCN1	Primary scan for phase
KUSCN2	Scan for DO-loop specification elements
KUSETS	Processing initialization
KUSKL1	Sets up variable step sindexes available loop control code
KUSKL2	Sets up variable step no sindexes loop control code
KUSKL3	Sets up constant step loop control code
KUSTEP	Determines type of step
KVALAS	Searches register alias table for SSUB register
KVCOMA	Processes COMA triples
KVCOMR	Processes COMR triples
KVERRS	Processes phase KU errors
KVITDP	Inserts loop control epilogue
KVJUMP	Processes pseudo-code within patches
KVPTCH	Processes PTCH triples by reference to patch file
KVSSBP	Processes SSB' triples occuring within patches
KVSSUB	Processes SSUB triple occuring within patches
KVSUBP	Processes all SUB' triples
KVSUBS	Processes SUBS triples

• Chart 08. Pseudo-Code Logical Phase Flowchart

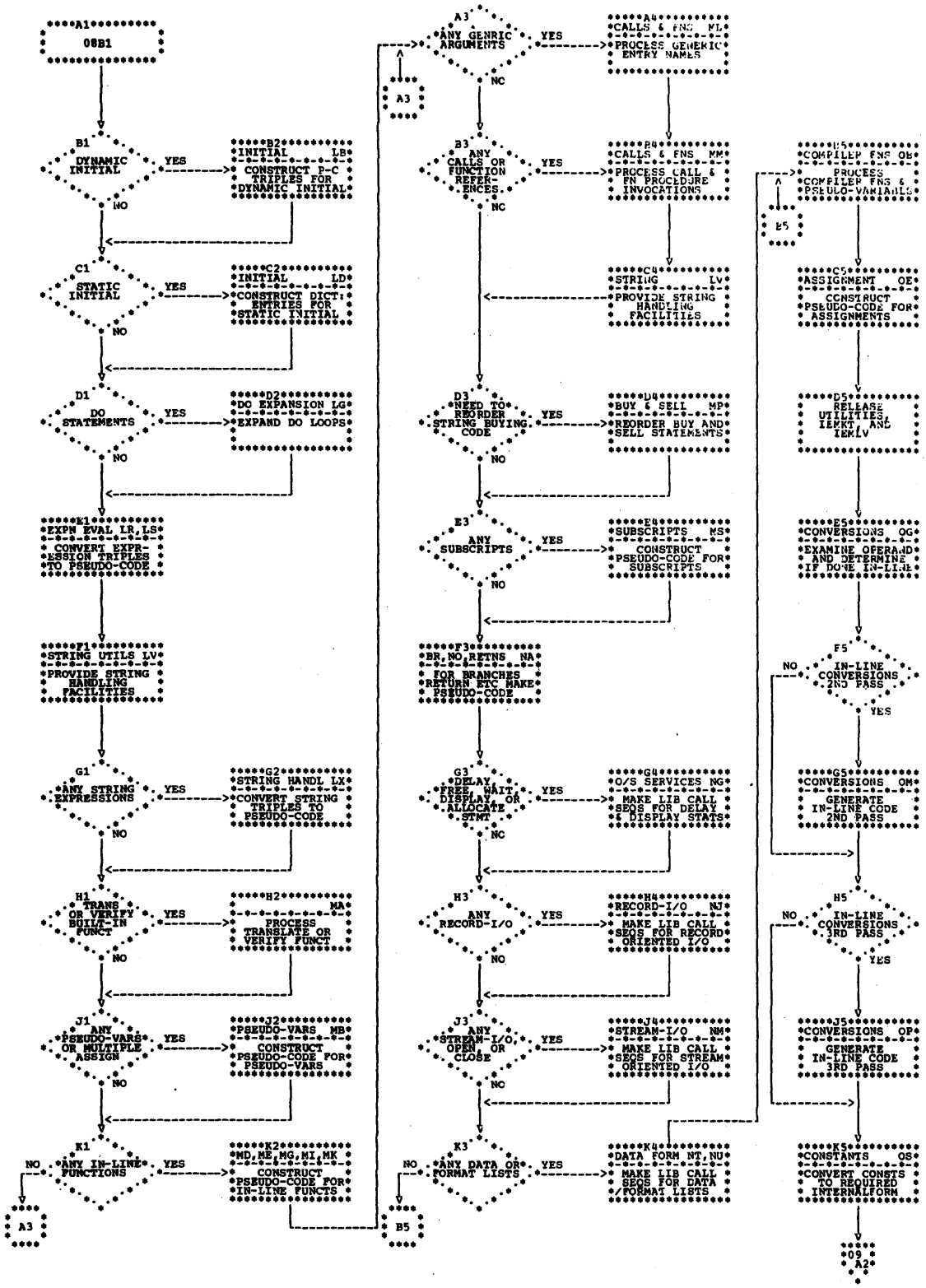

Chart LB. Phase LB Overall Logic Diagram

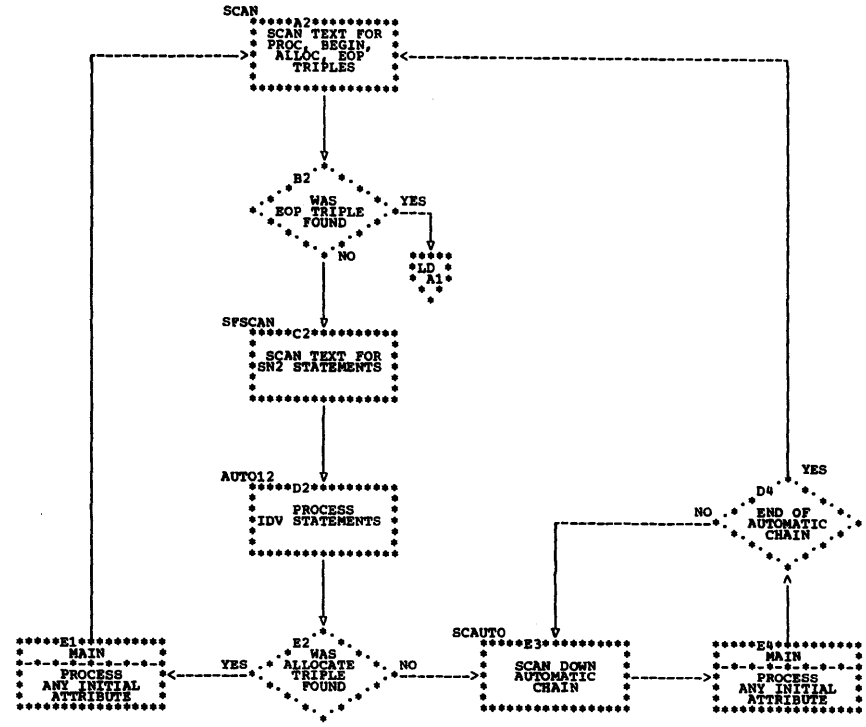

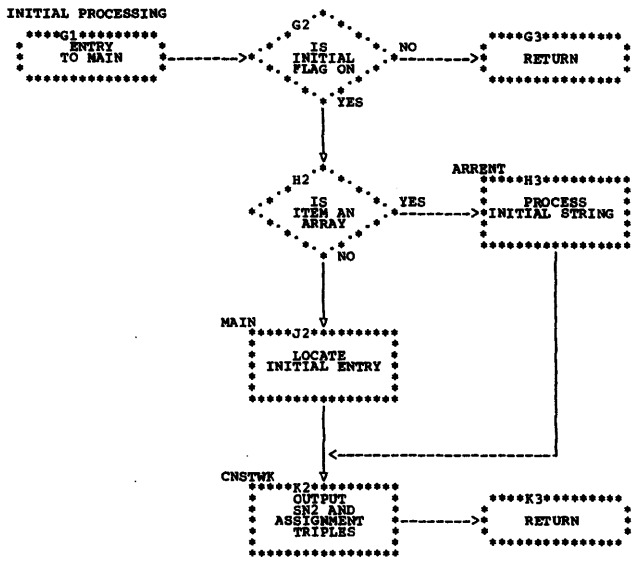

Chart LD. Phase LD Overall Logic Diagram

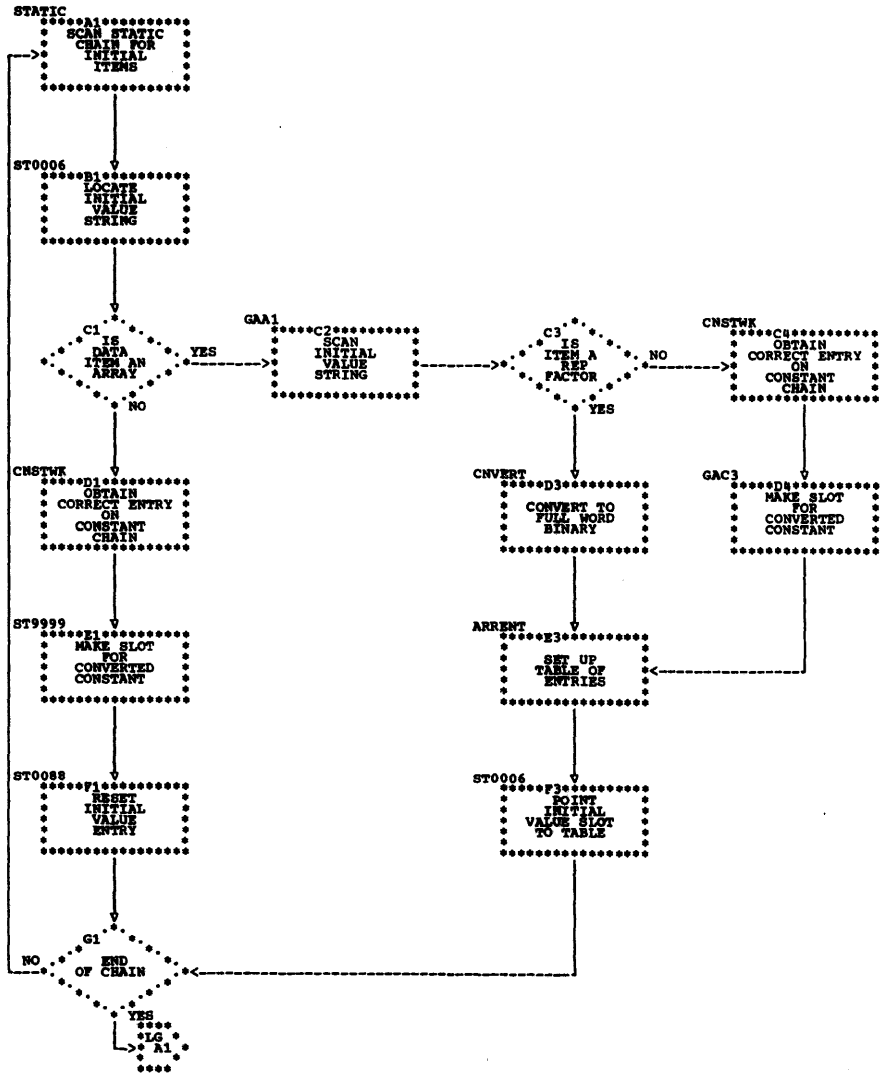

Chart LG. Phase LG Overall Logic Diagram

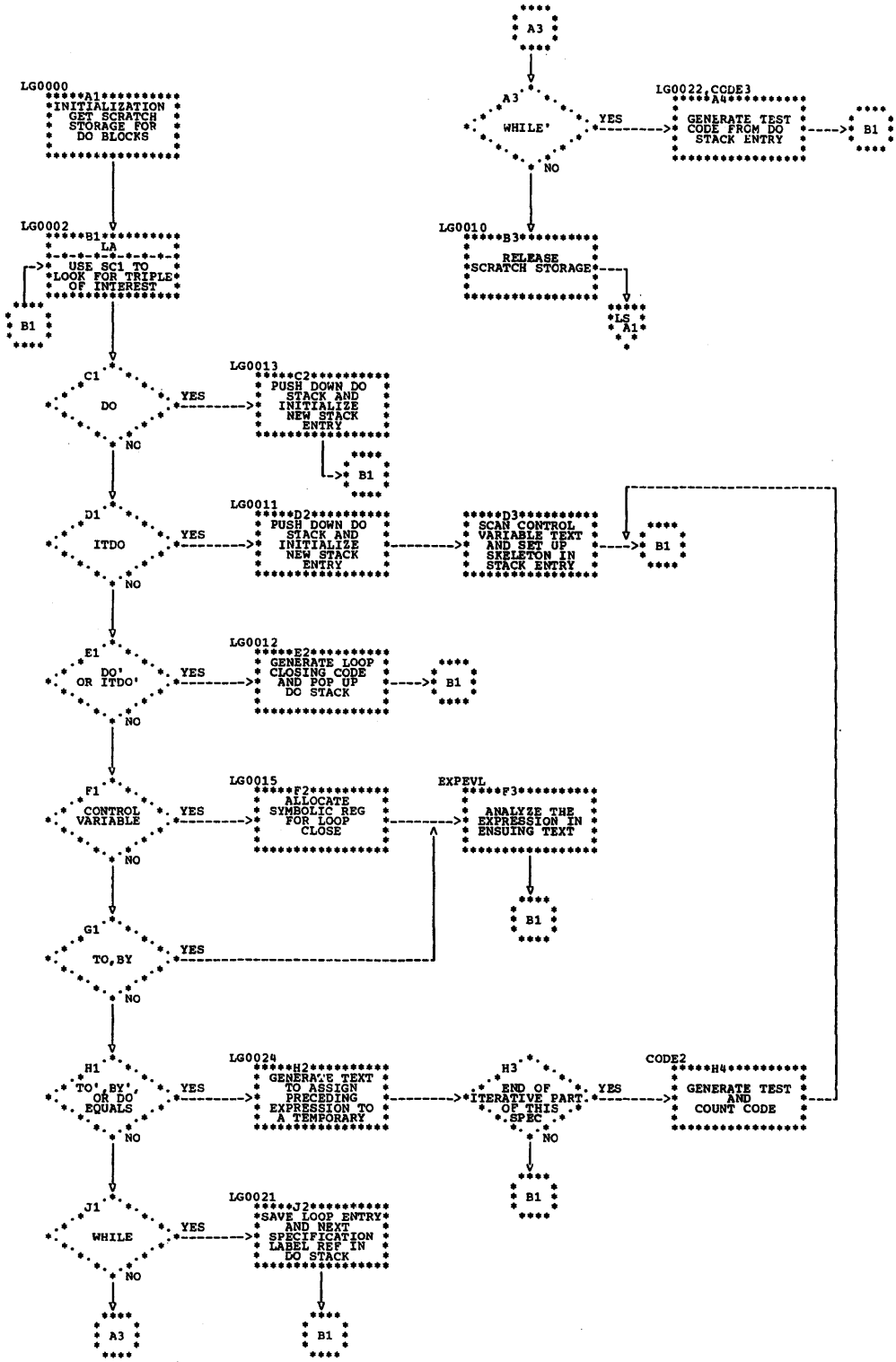

Chart LS. Phase LS Overall Logic Diagram

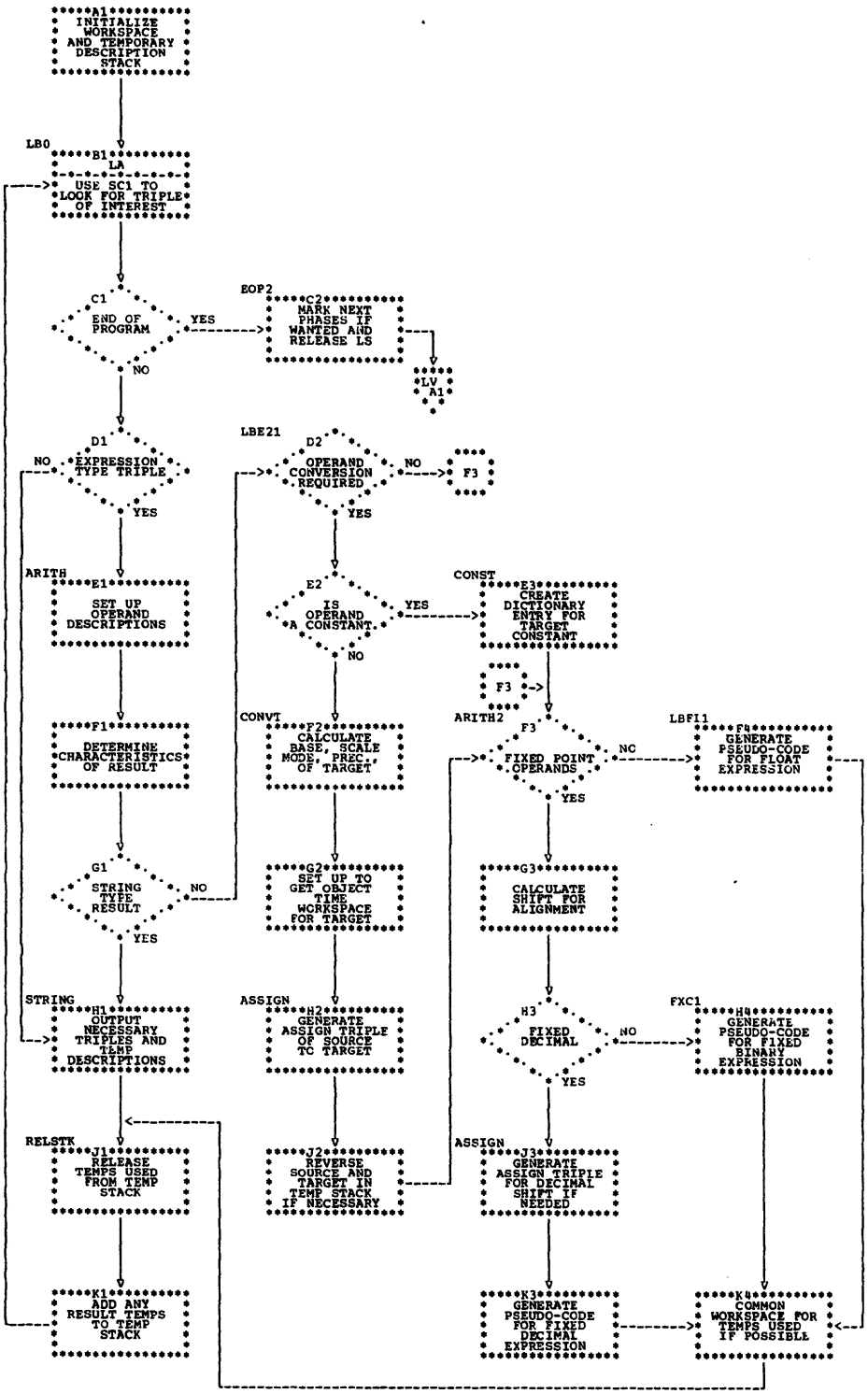

Chart LV. Phase LV Overall Logic Diagram

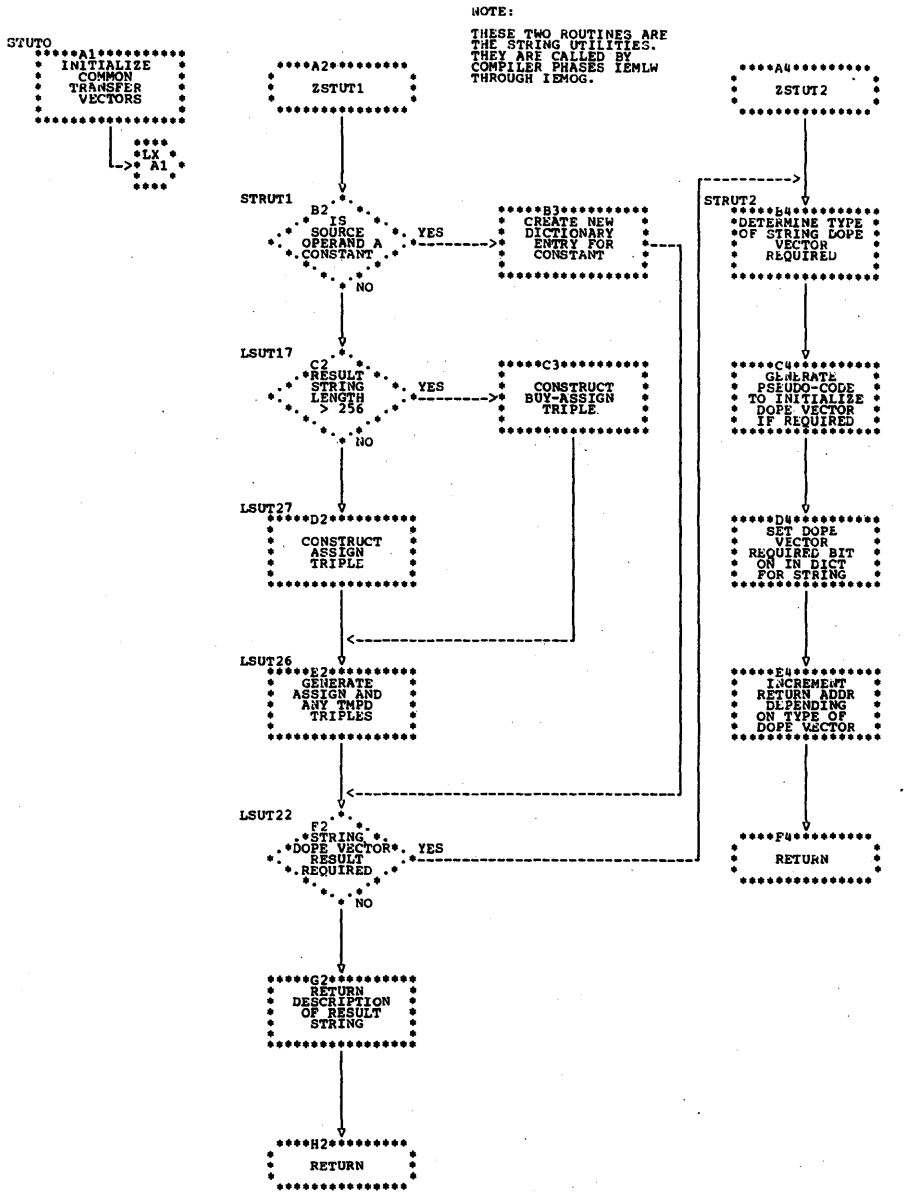

• Chart LX. Phase LX Overall Logic Diagram

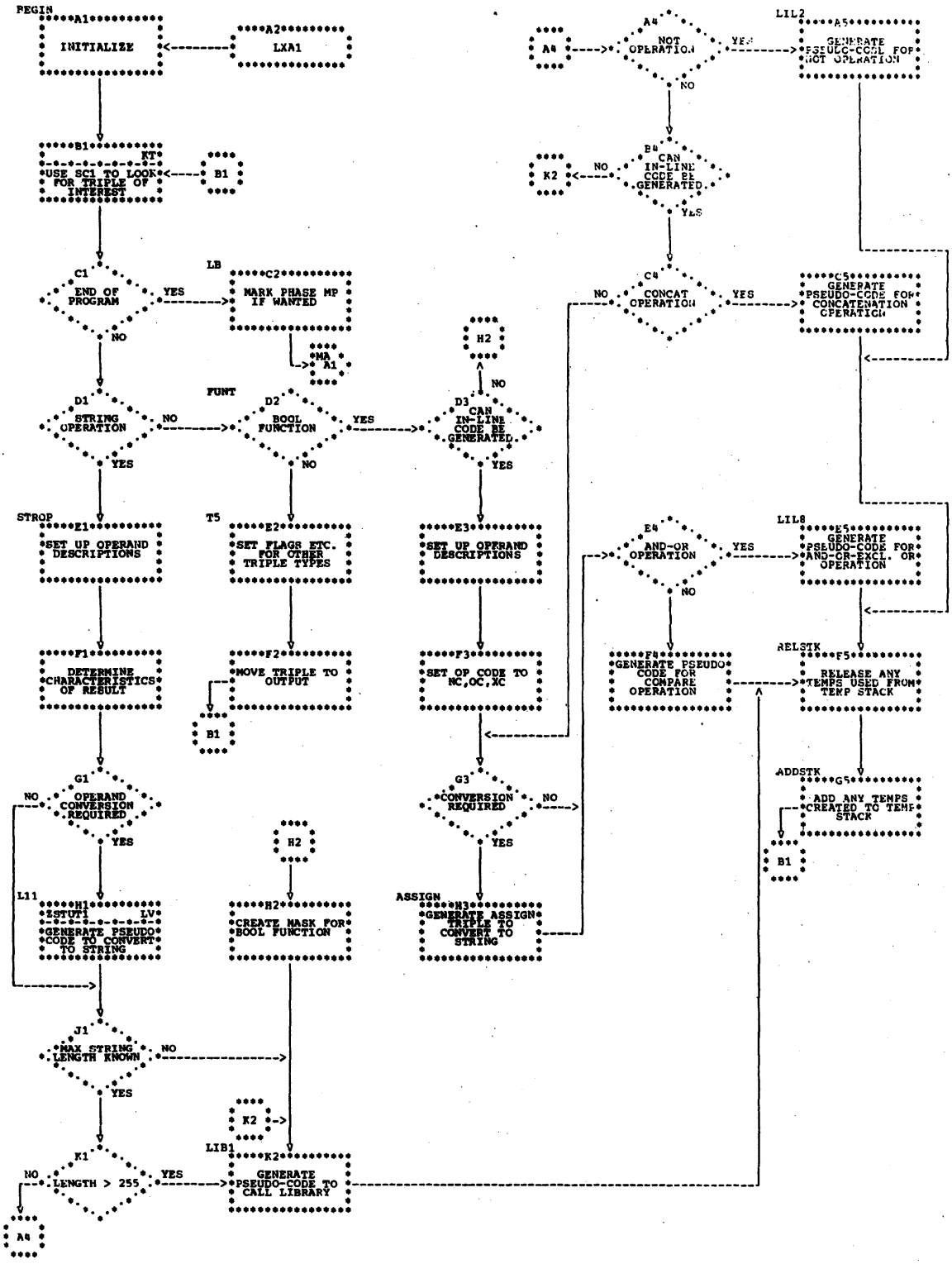

• Chart MA. Phase MA Overall Logic Diagram

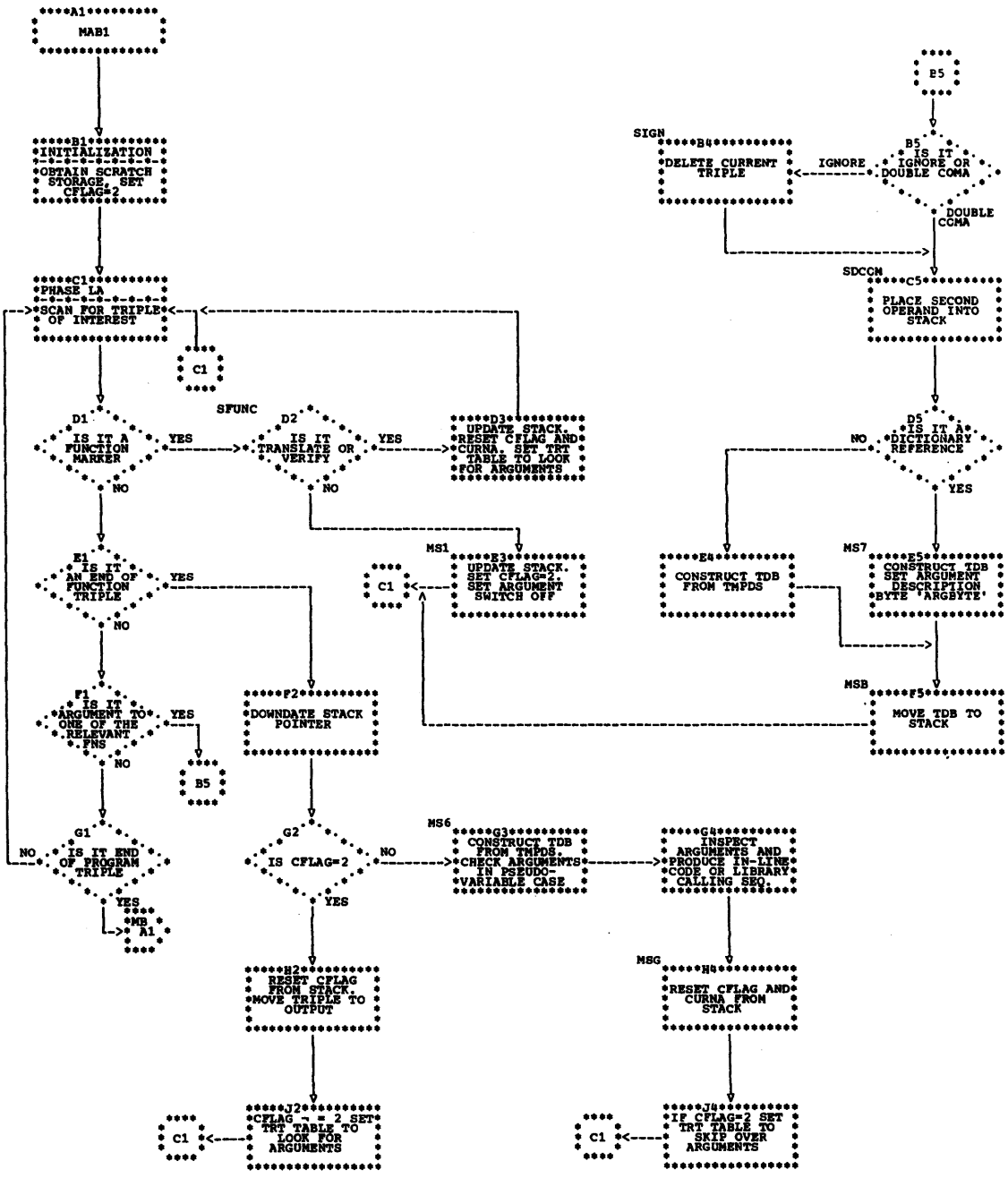

Chart MB. Phase MB Overall Logic Diagram

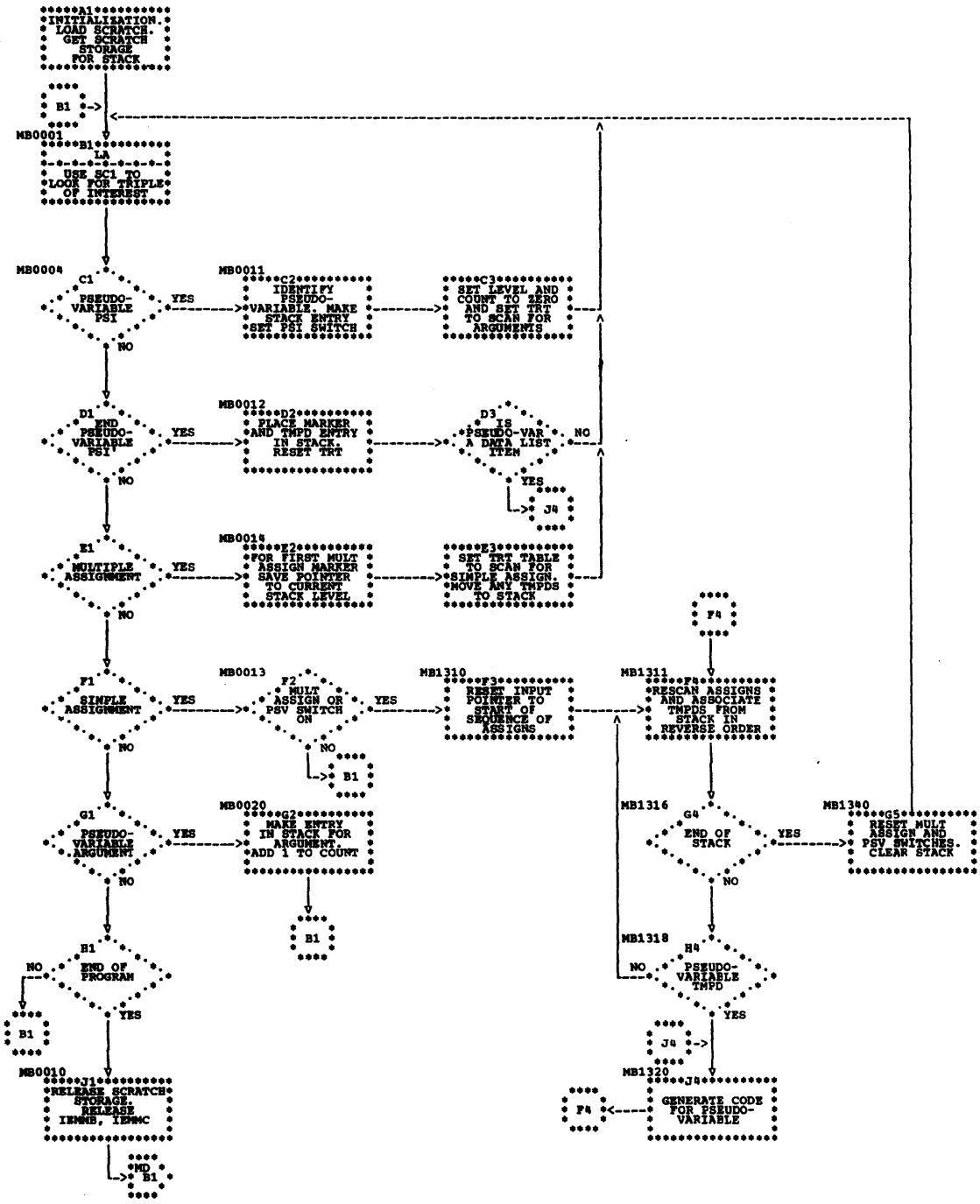

Chart MD. Phase MD Overall Logic Diagram

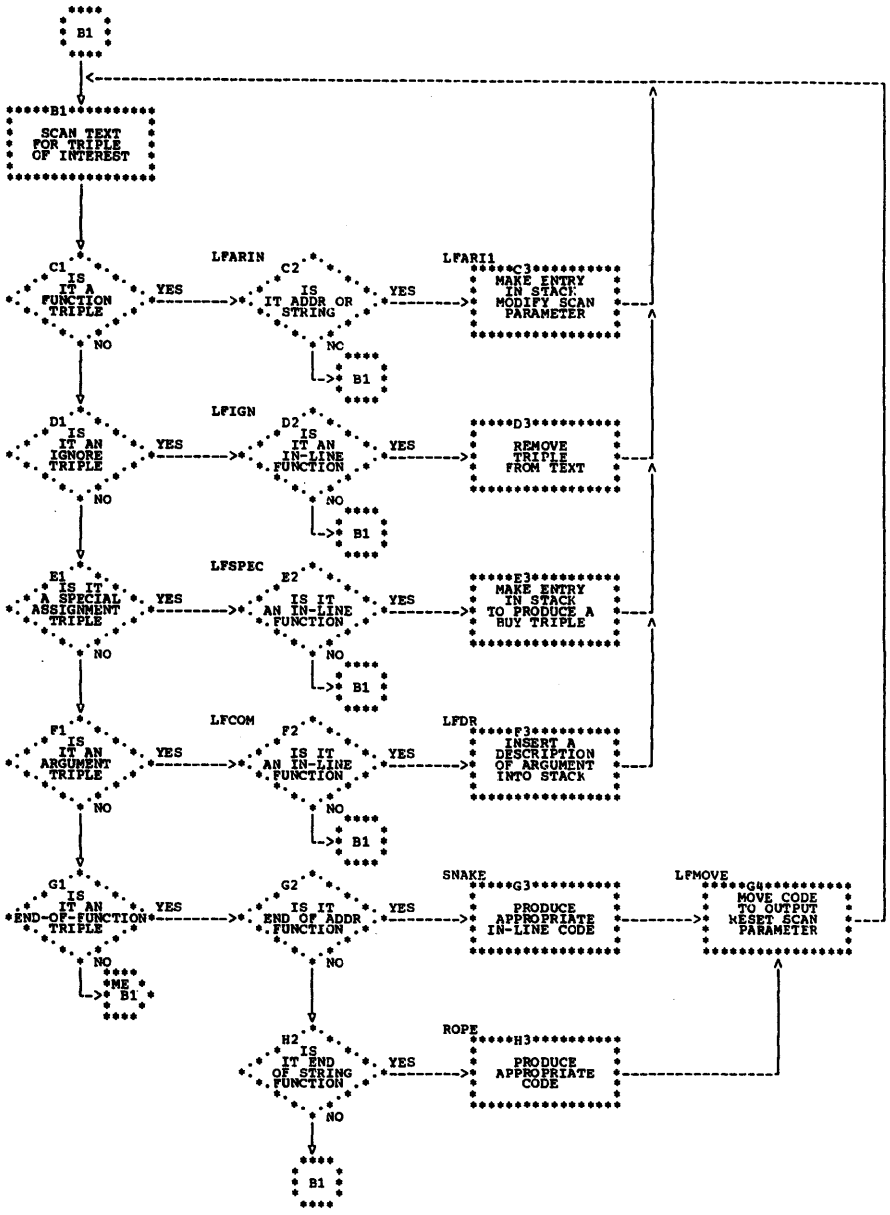

Chart ME. Phase ME Overall Logic Diagram

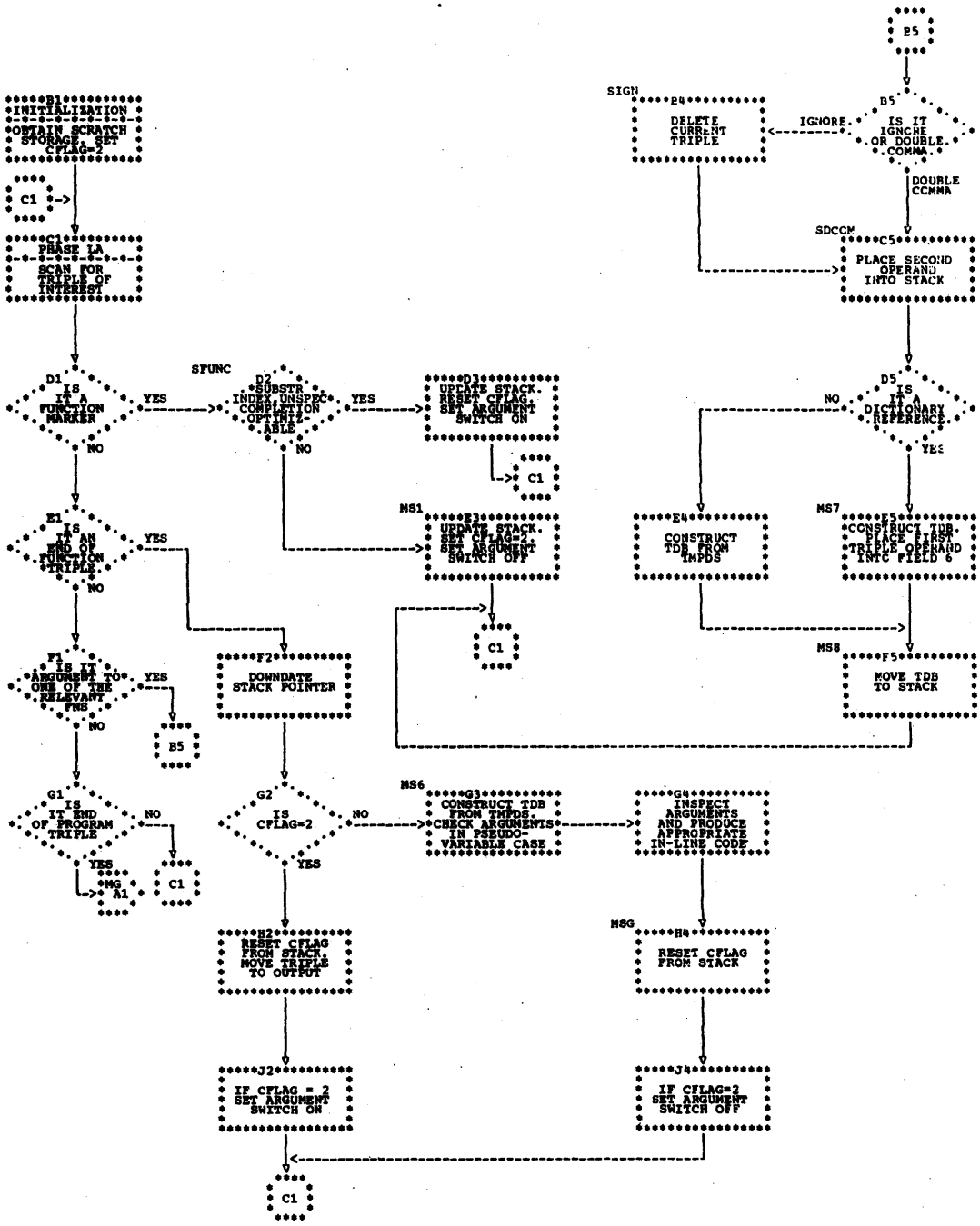

Chart MG. Phase MG Overall Logic Diagram

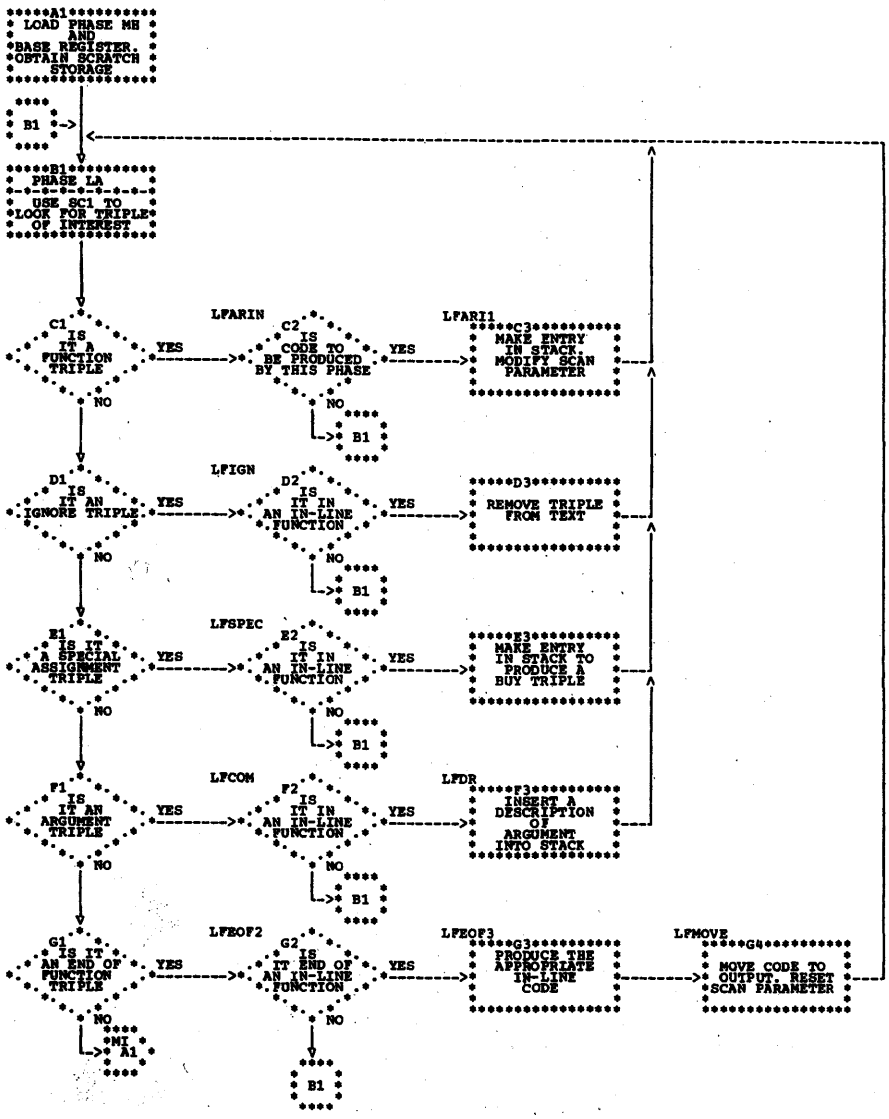

Chart MI. Phase MI Overall Logic Diagram

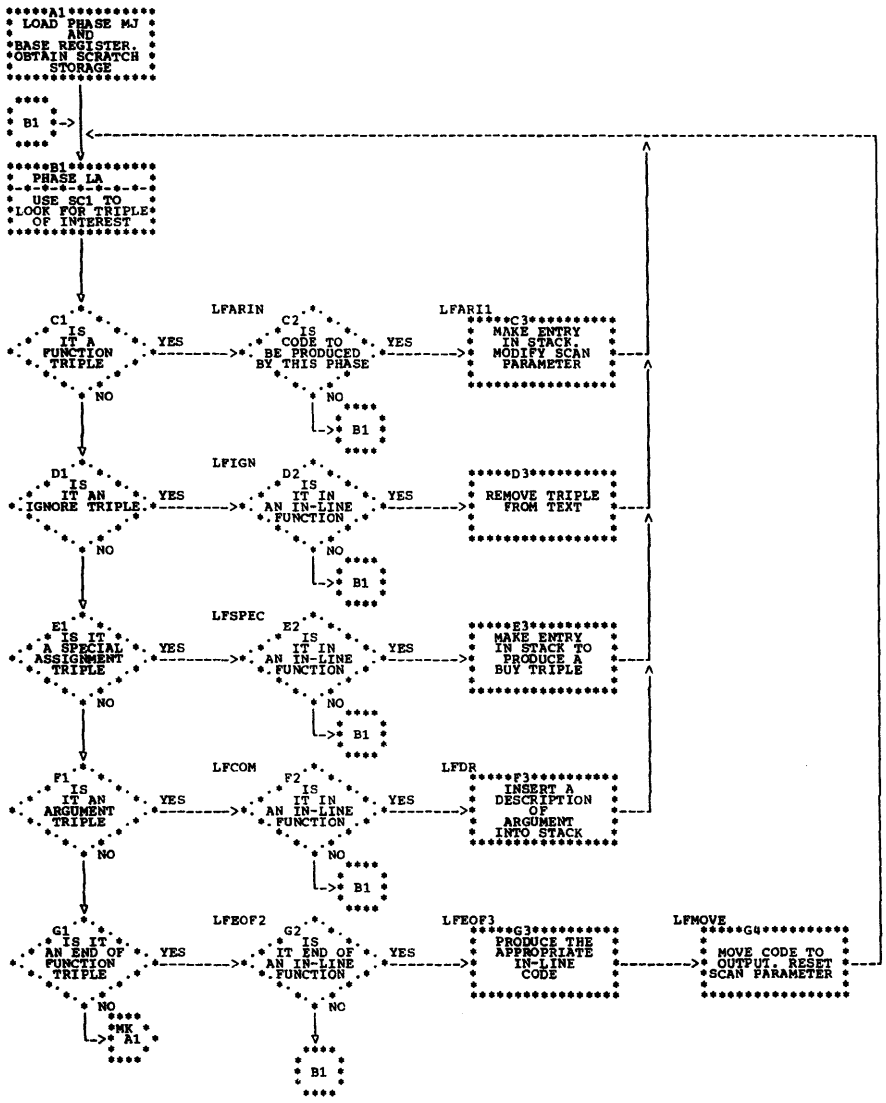

Chart MK. Phase MK Overall Logic Diagram

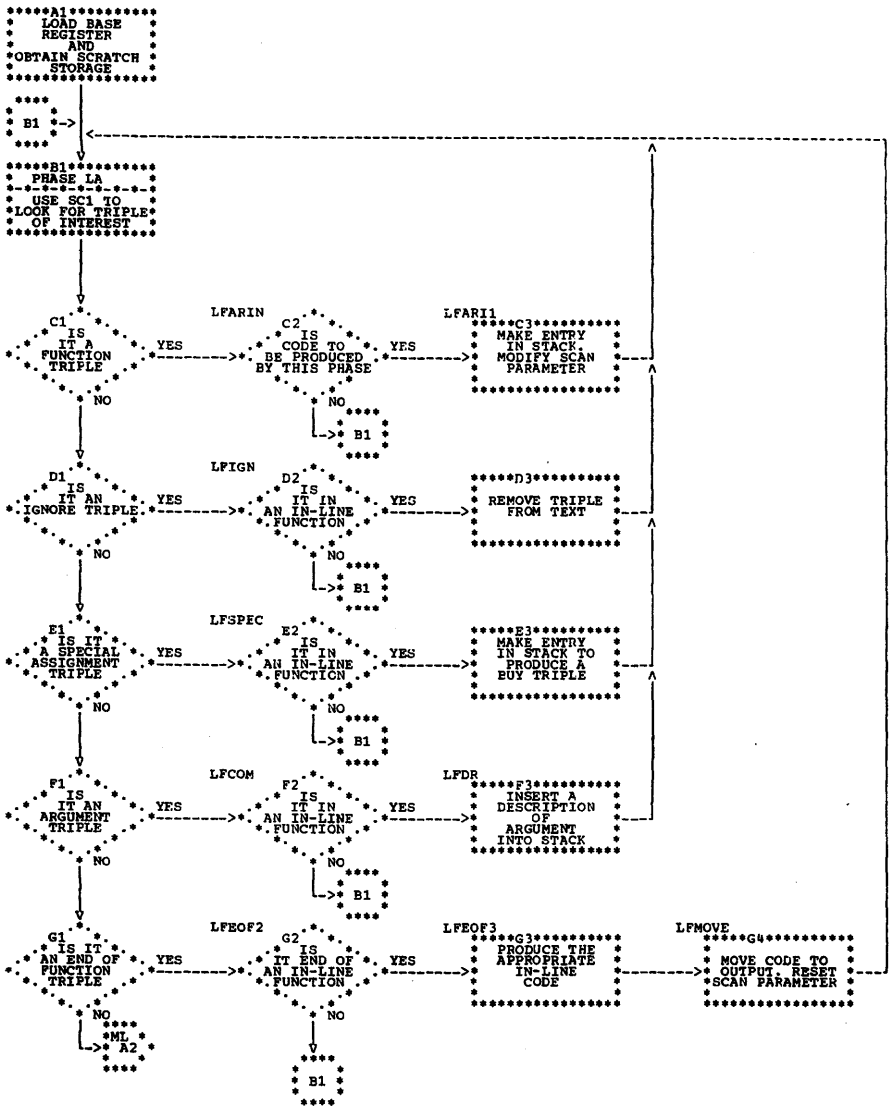

Chart ML. Phase ML Overall Logic Diagram

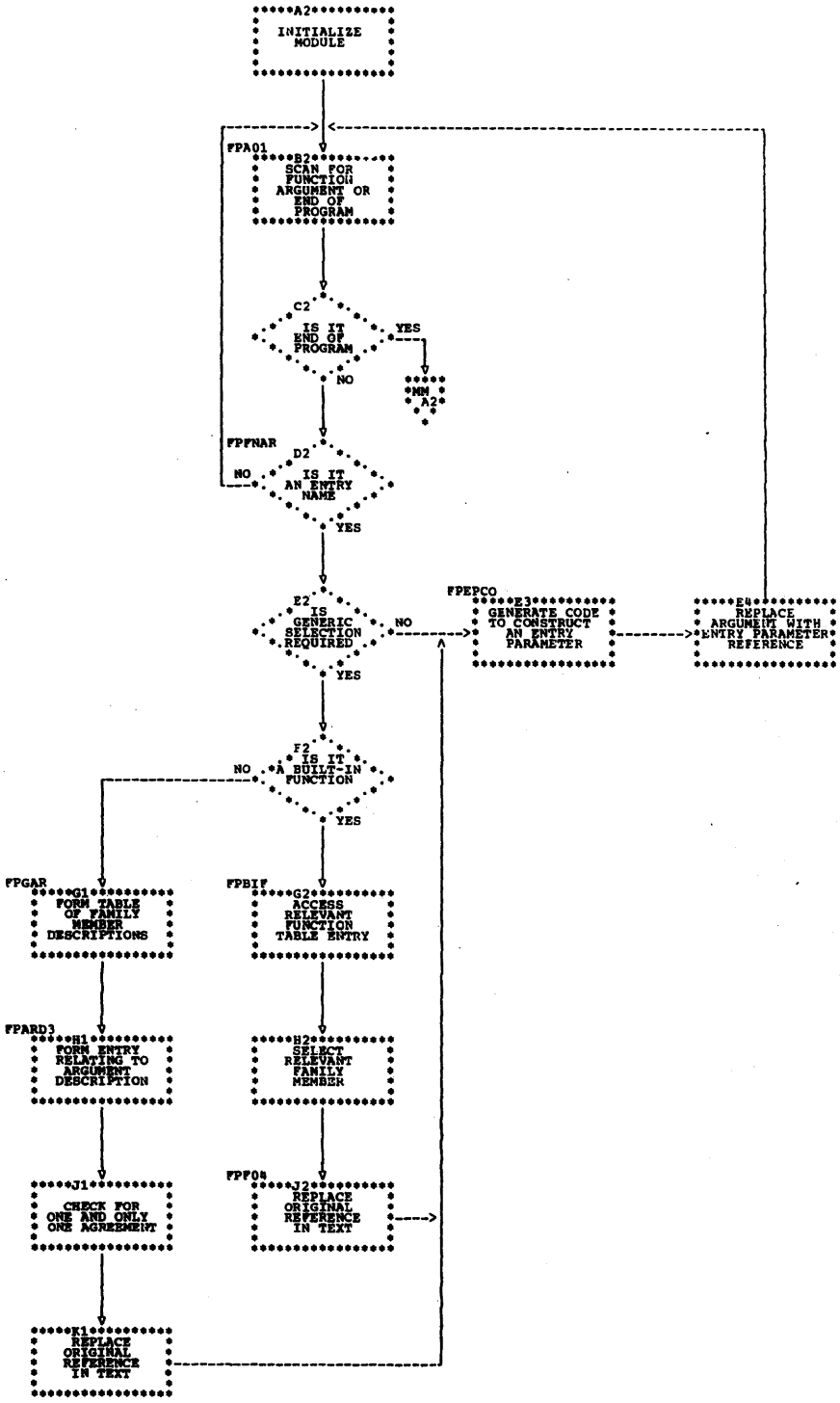

Chart MM. Phase MM Overall Logic Diagram

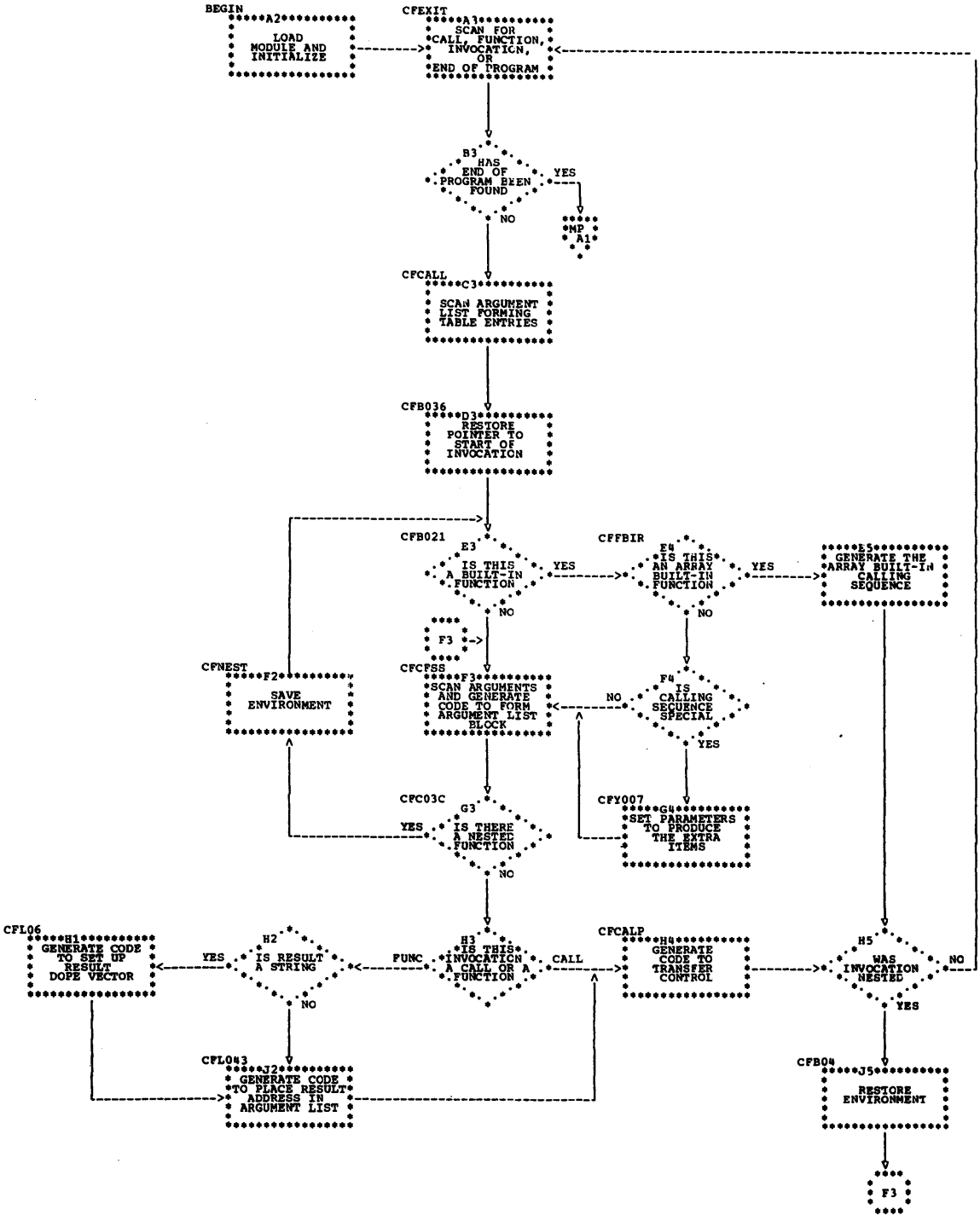

Chart MP. Phase MP Overall Logic Diagram

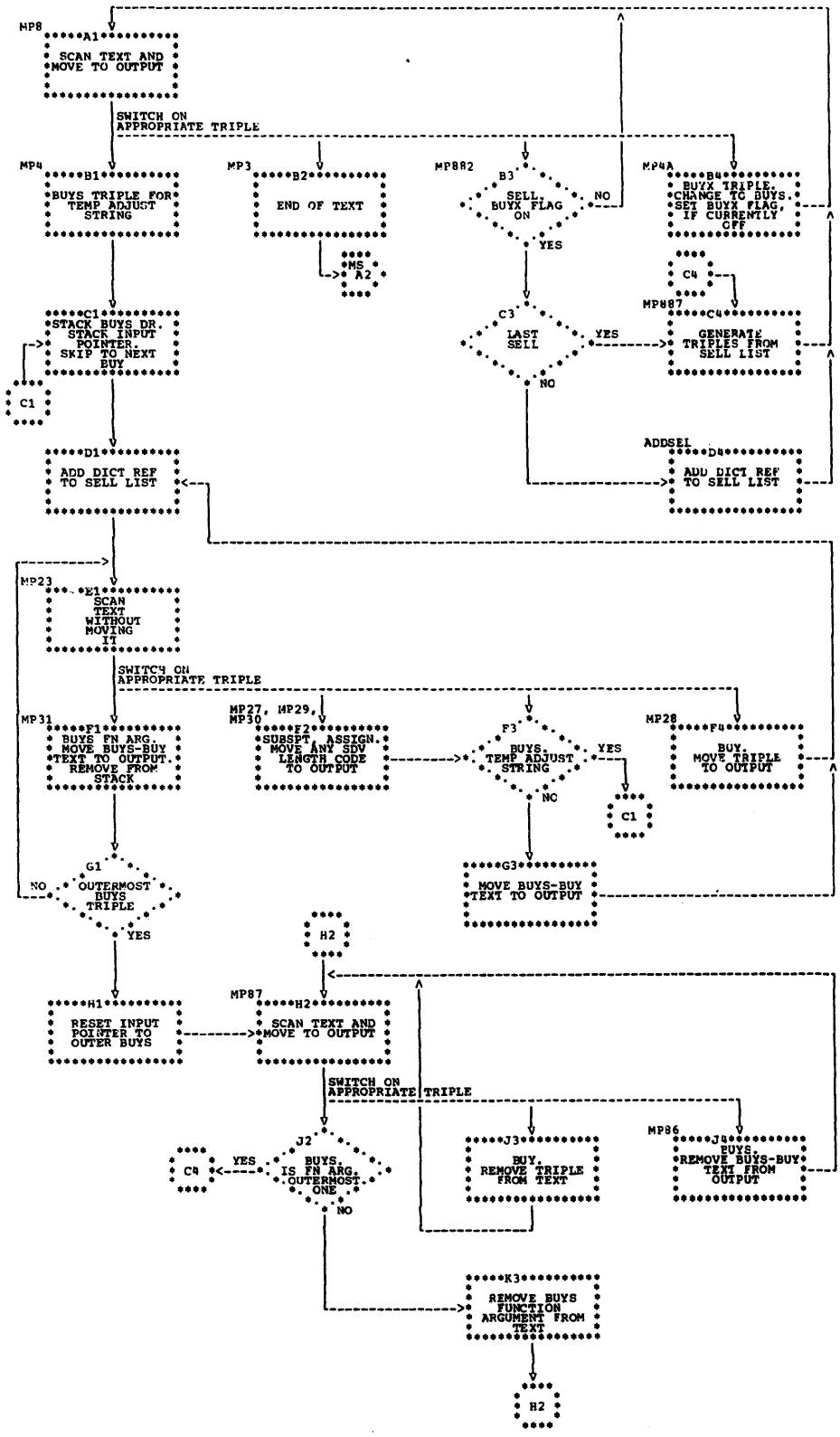

Chart MS. Phase MS Overall Logic Diagram

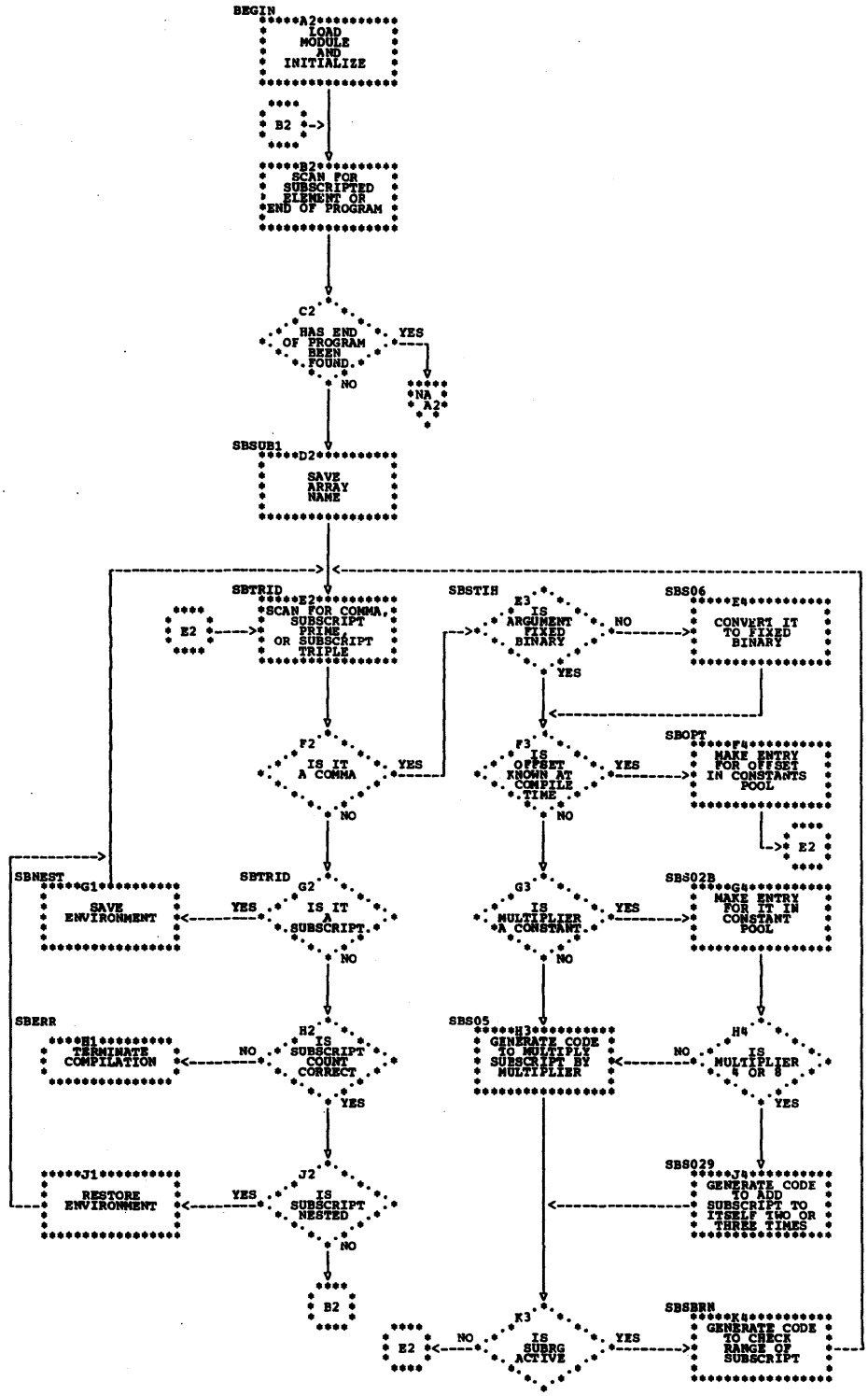

Chart NA. Phase NA Overall Logic Diagram

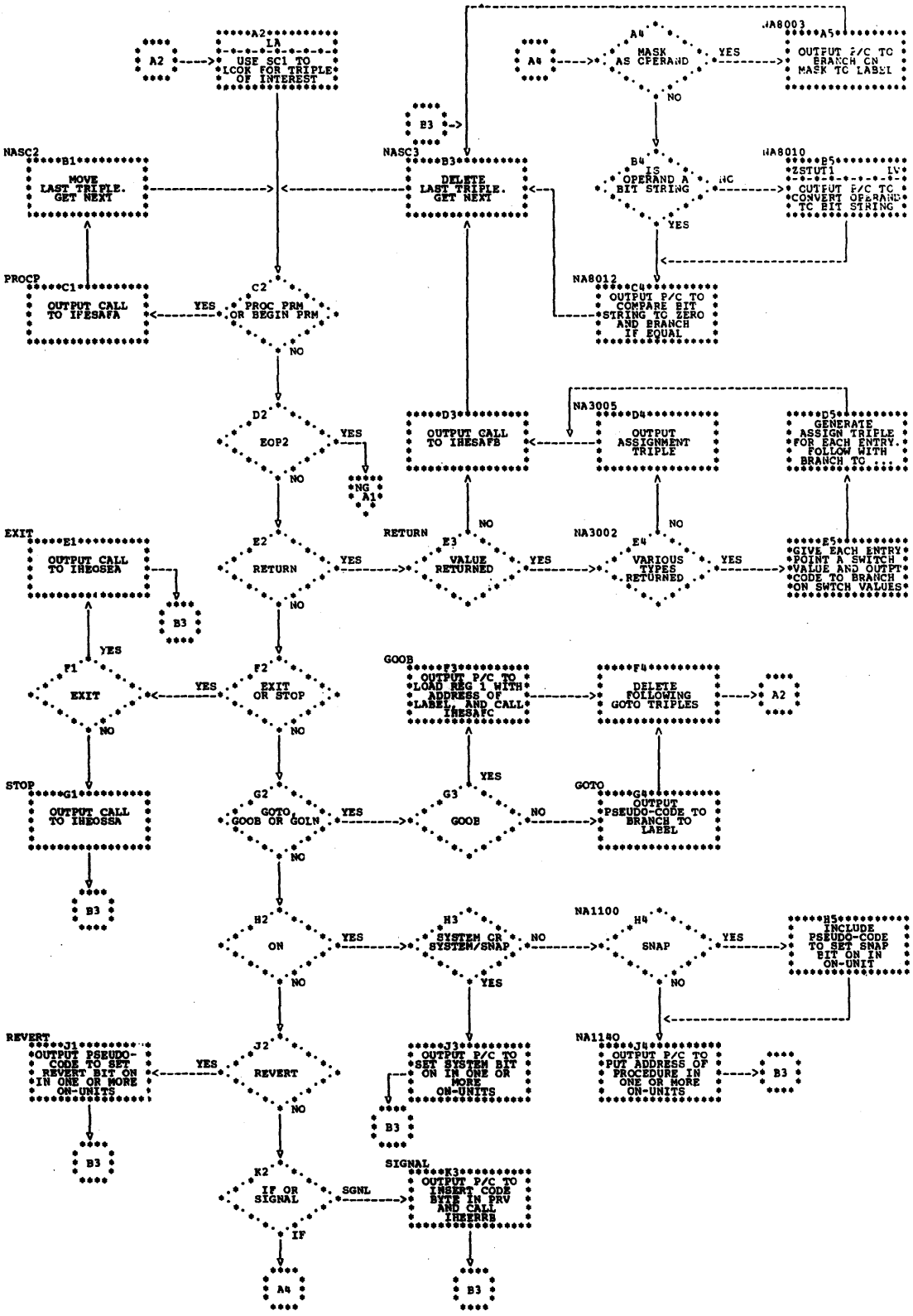

Chart NG. Phase NG Overall Logic Diagram

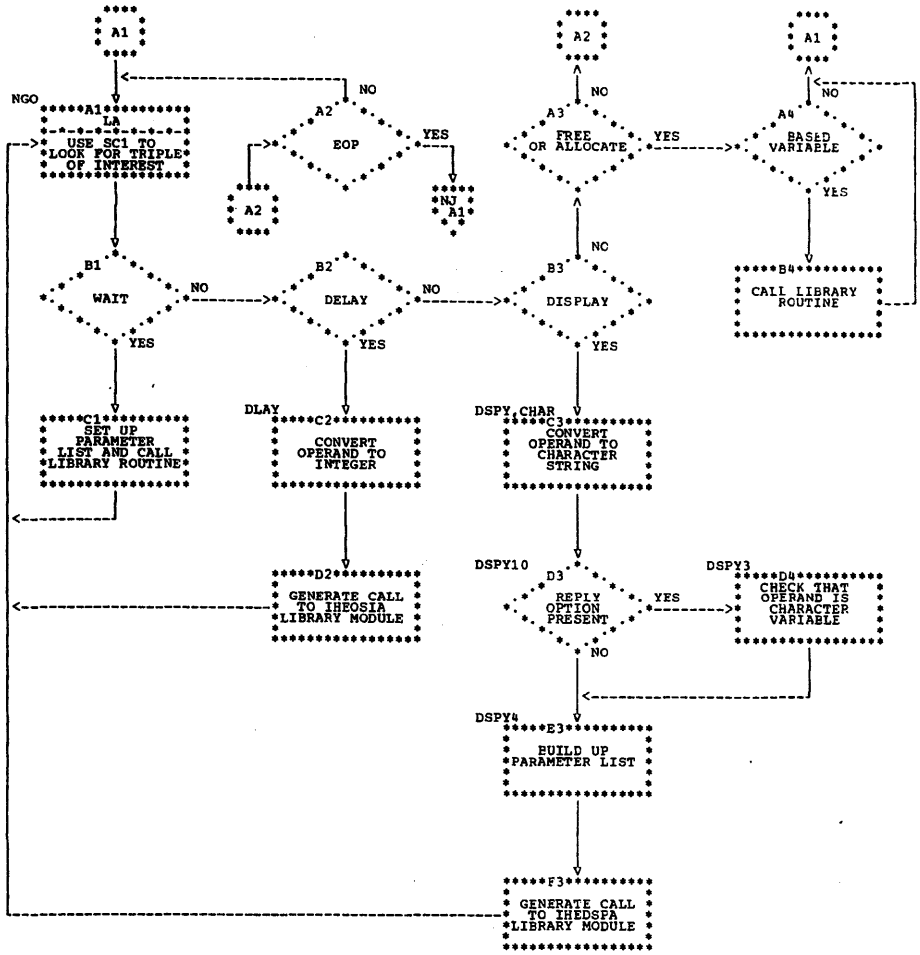

Chart NJ. Phase NJ Overall Logic Diagram

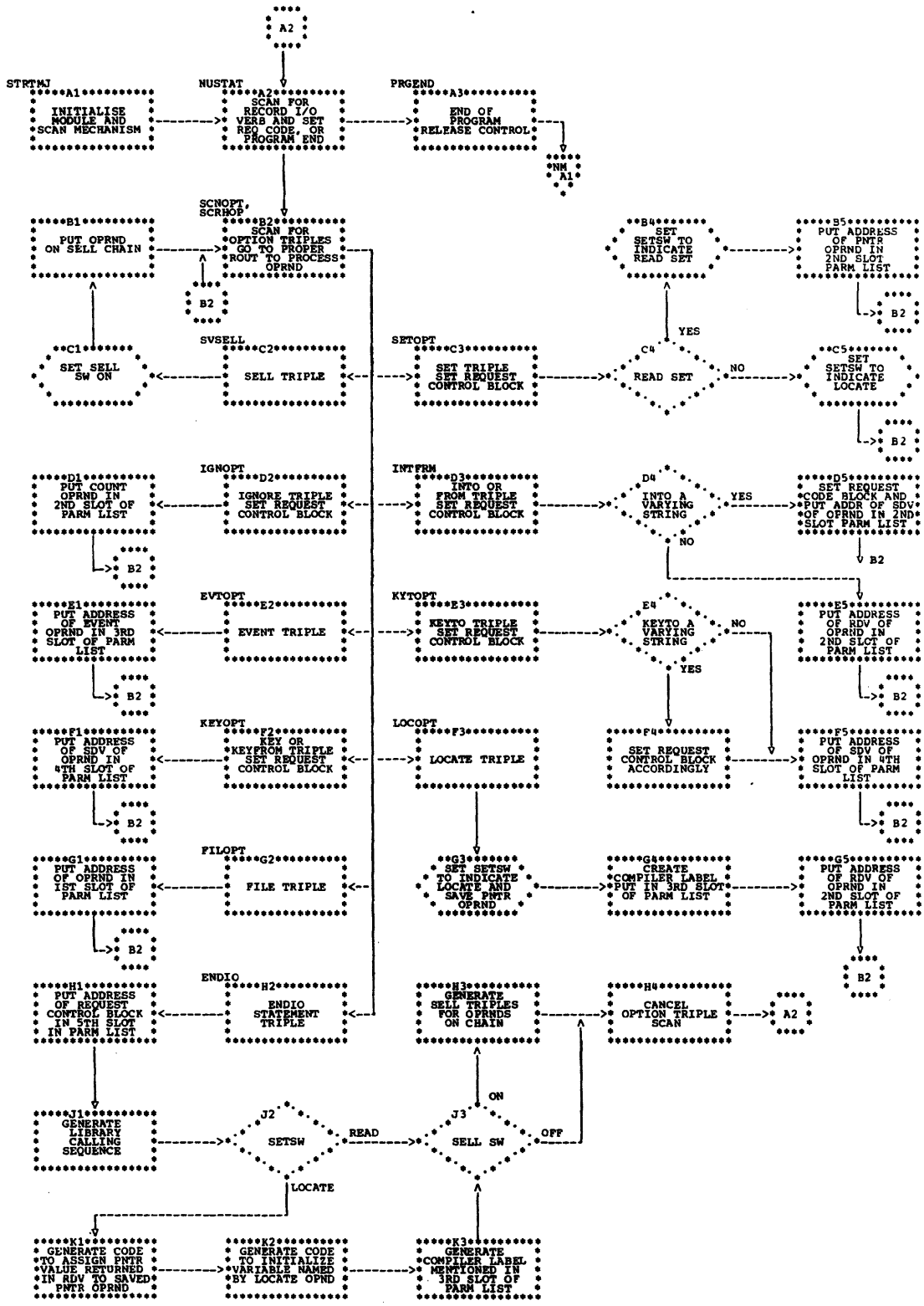

Chart NM. Phase NM Overall Logic Diagram

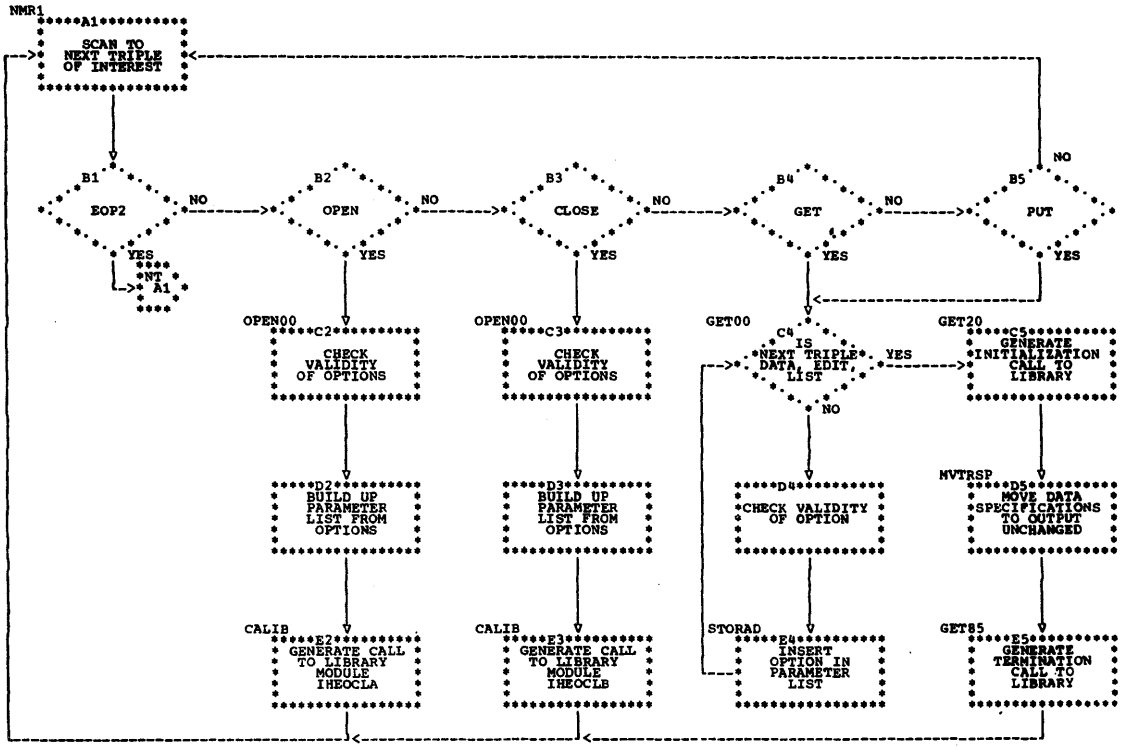

Chart NT. Phase NT Overall Logic Diagram

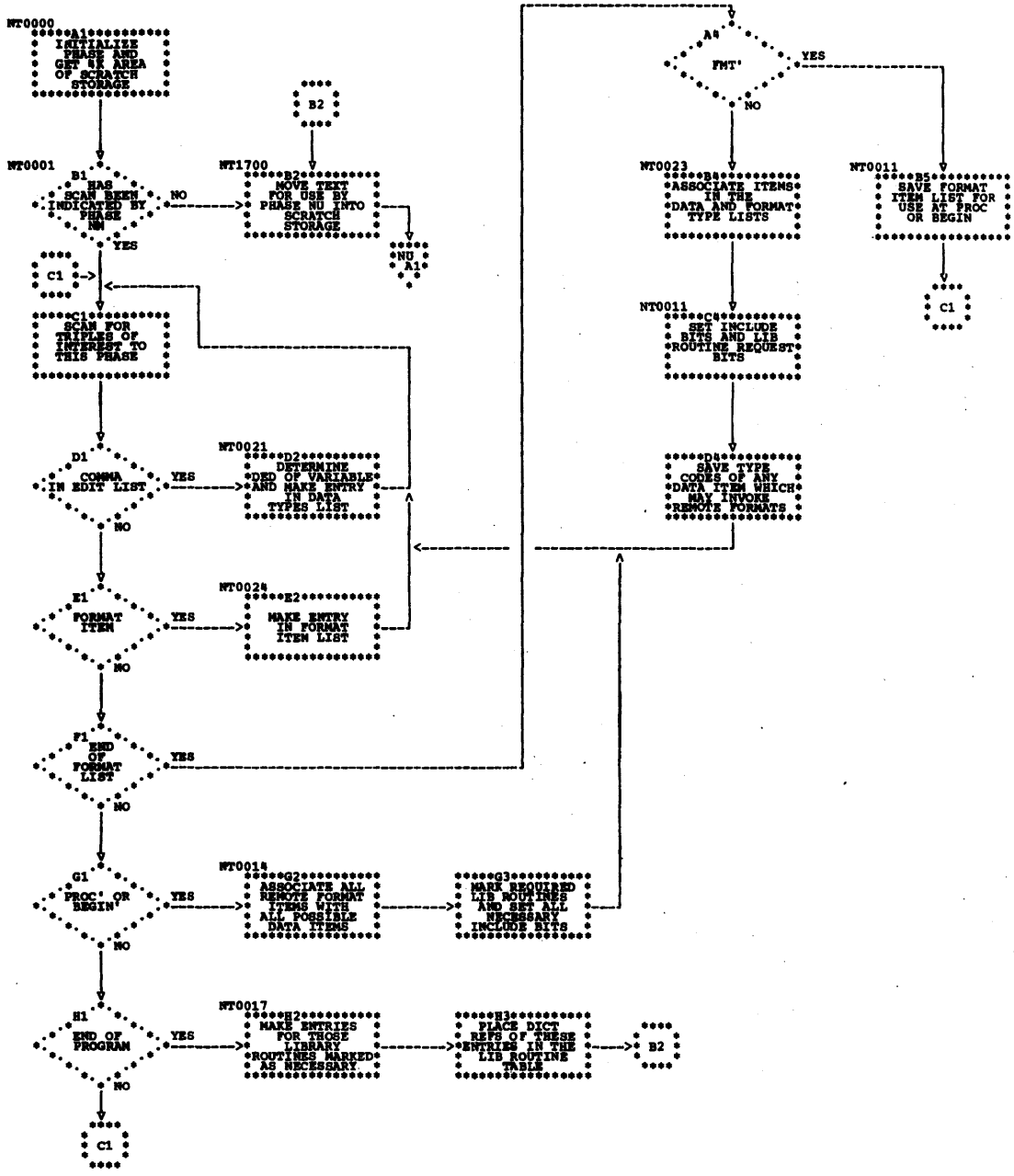

Chart NU. Phase NU Overall Logic Diagram

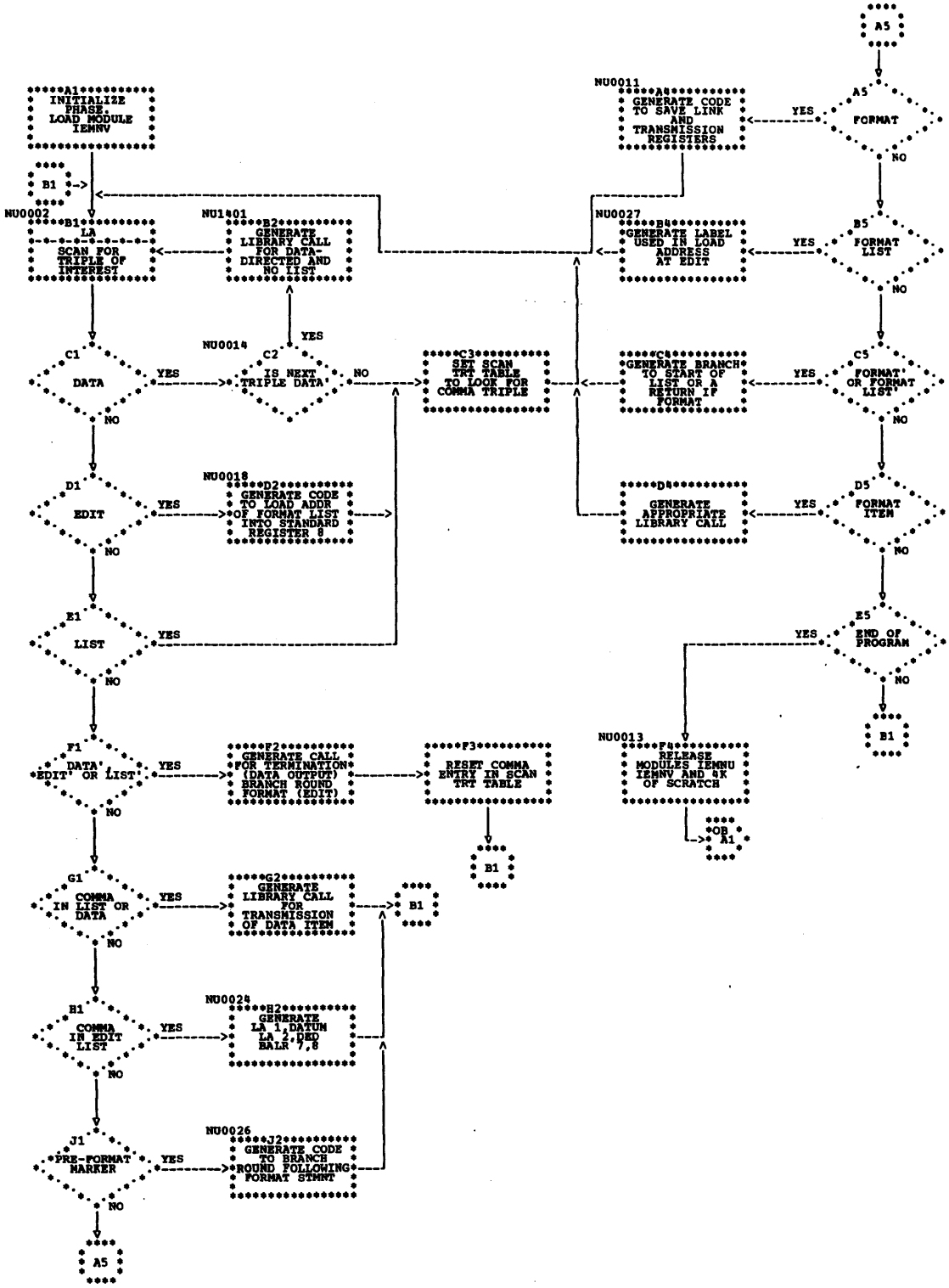

Chart OB. Phase OB Overall Logic Diagram

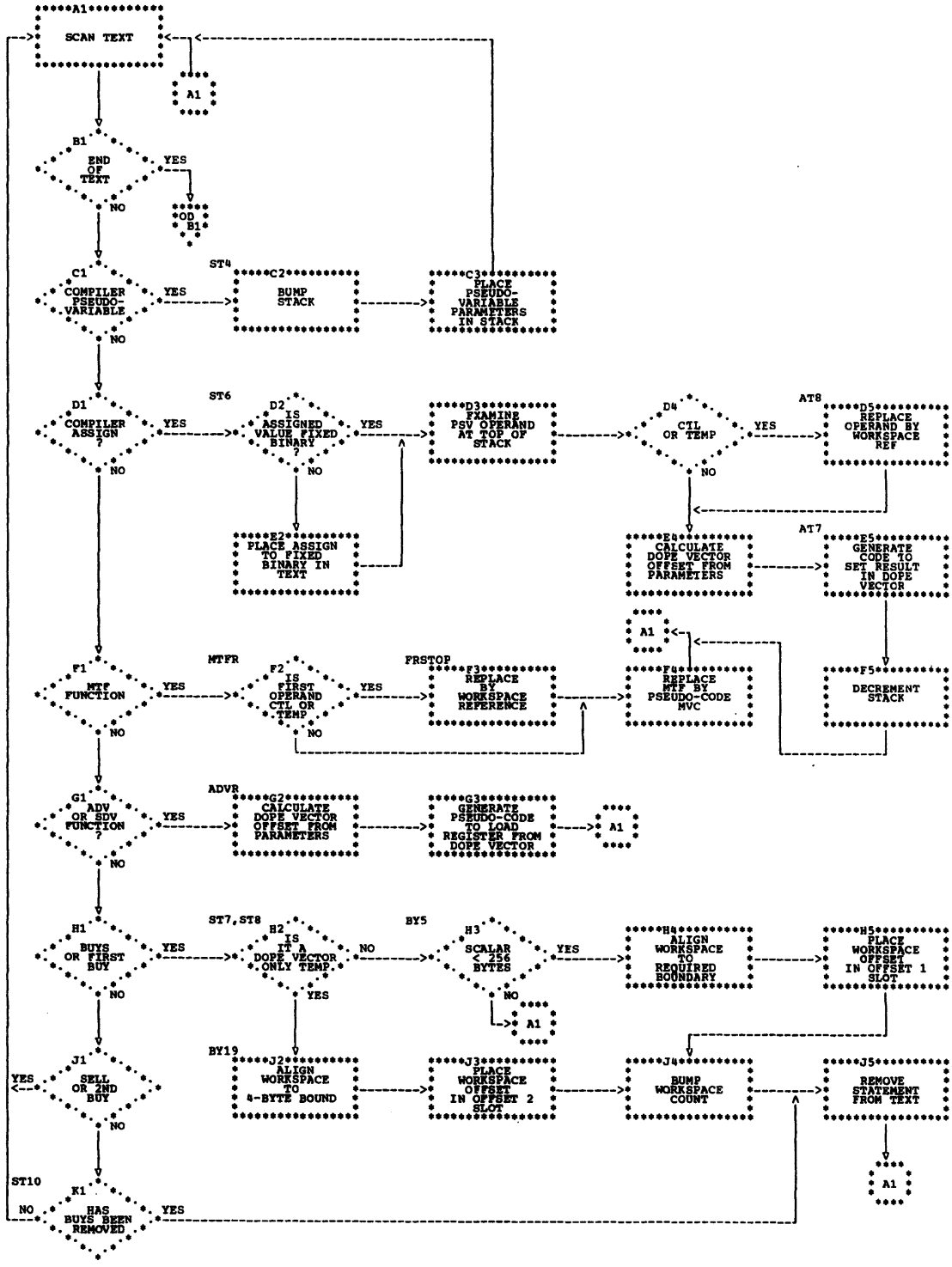

Chart OD. Module OD Overall Logic Diagram

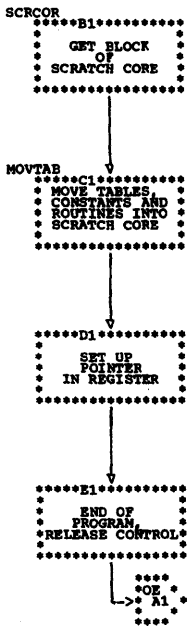

Chart OE. Phase OE Overall Logic Diagram

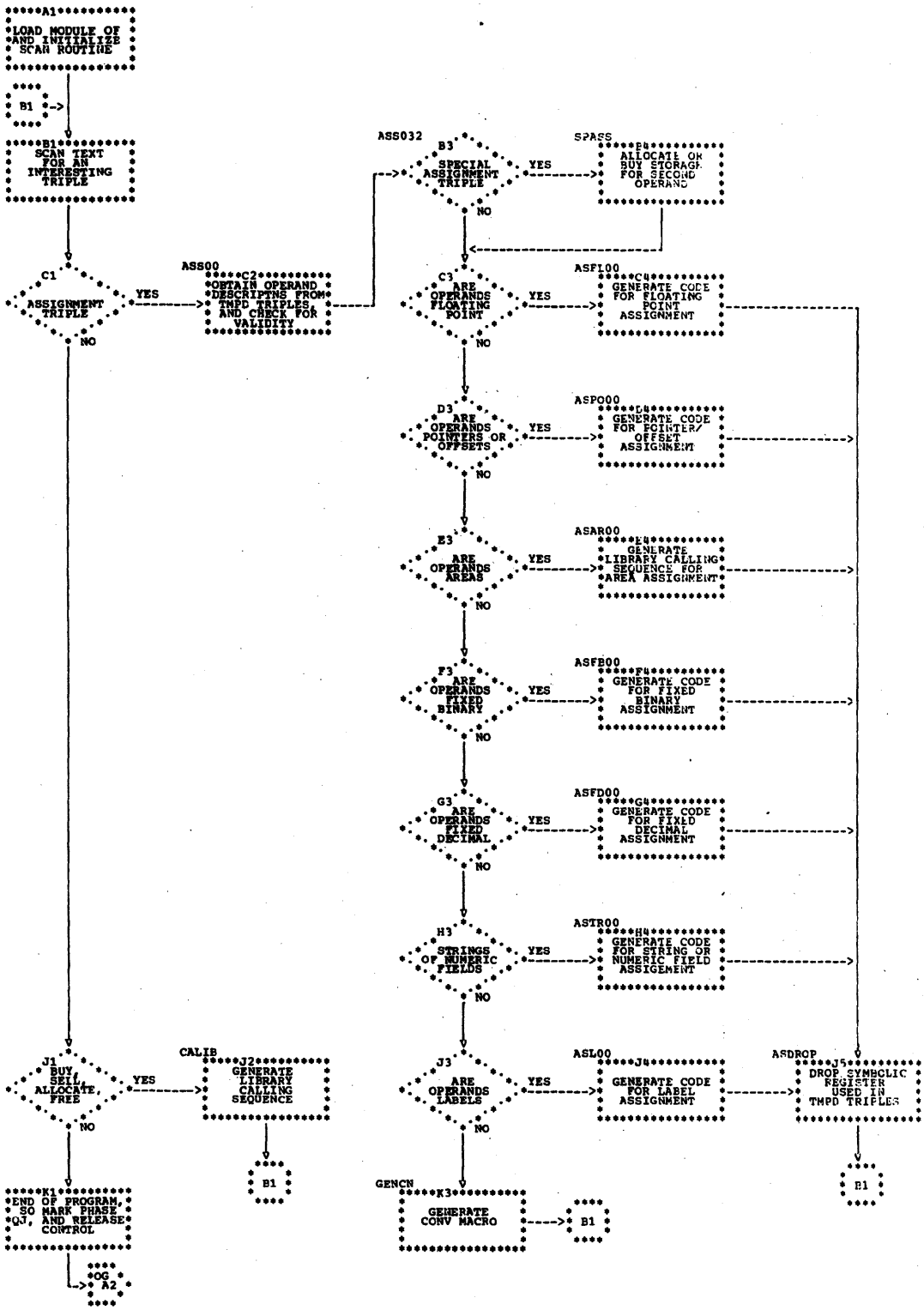

● Chart OG. Phase OG Overall Logic Diagram

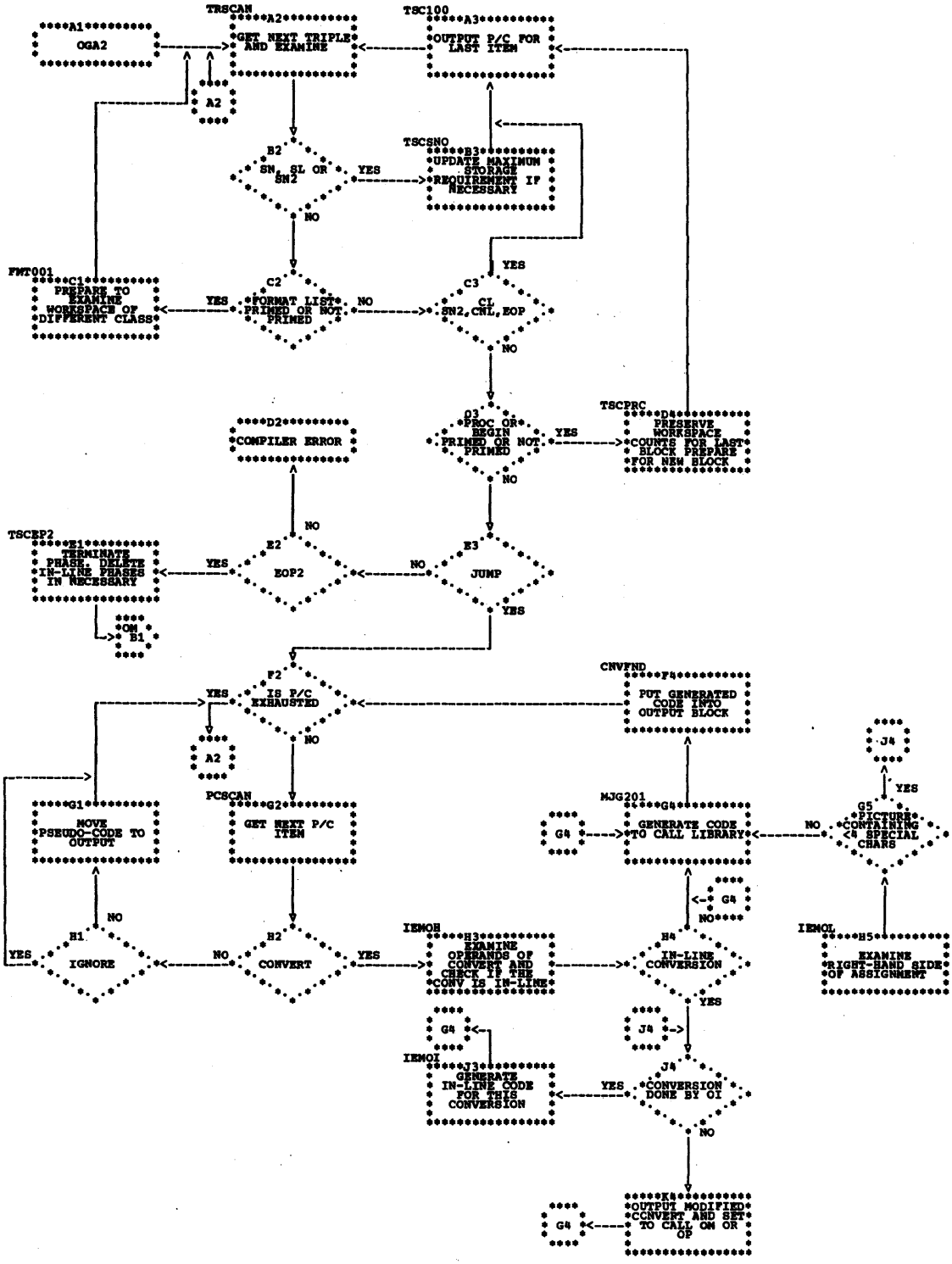

Chart OM. Phase OM Overall Logic Diagram

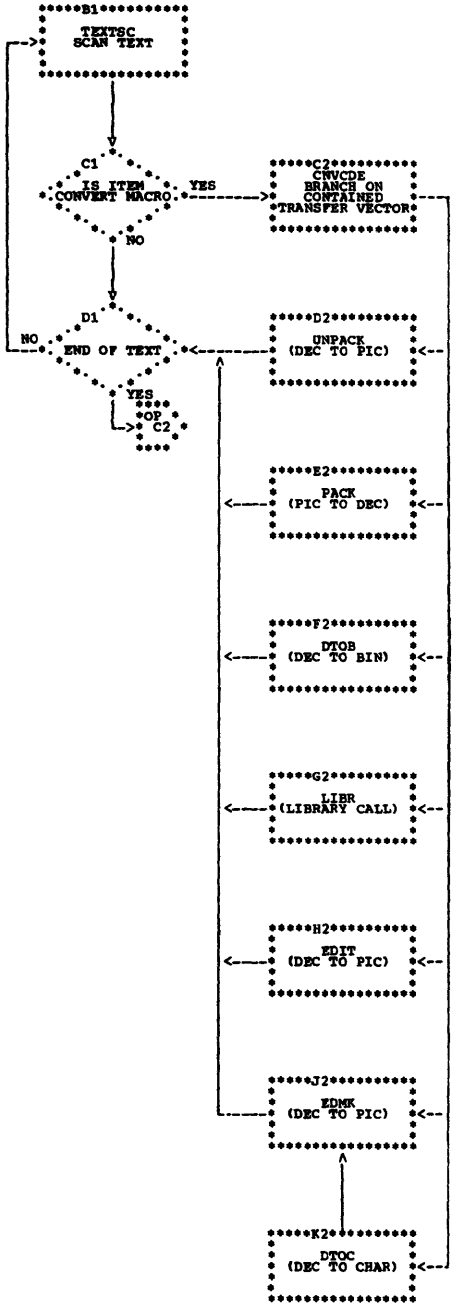

Chart OP. Phase OP Overall Logic Diagram

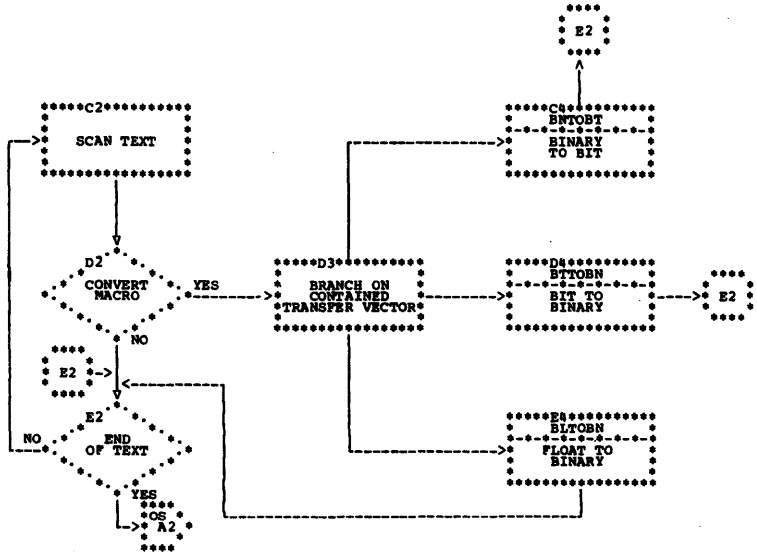

Chart OS. Phase OS Overall Logic Diagram

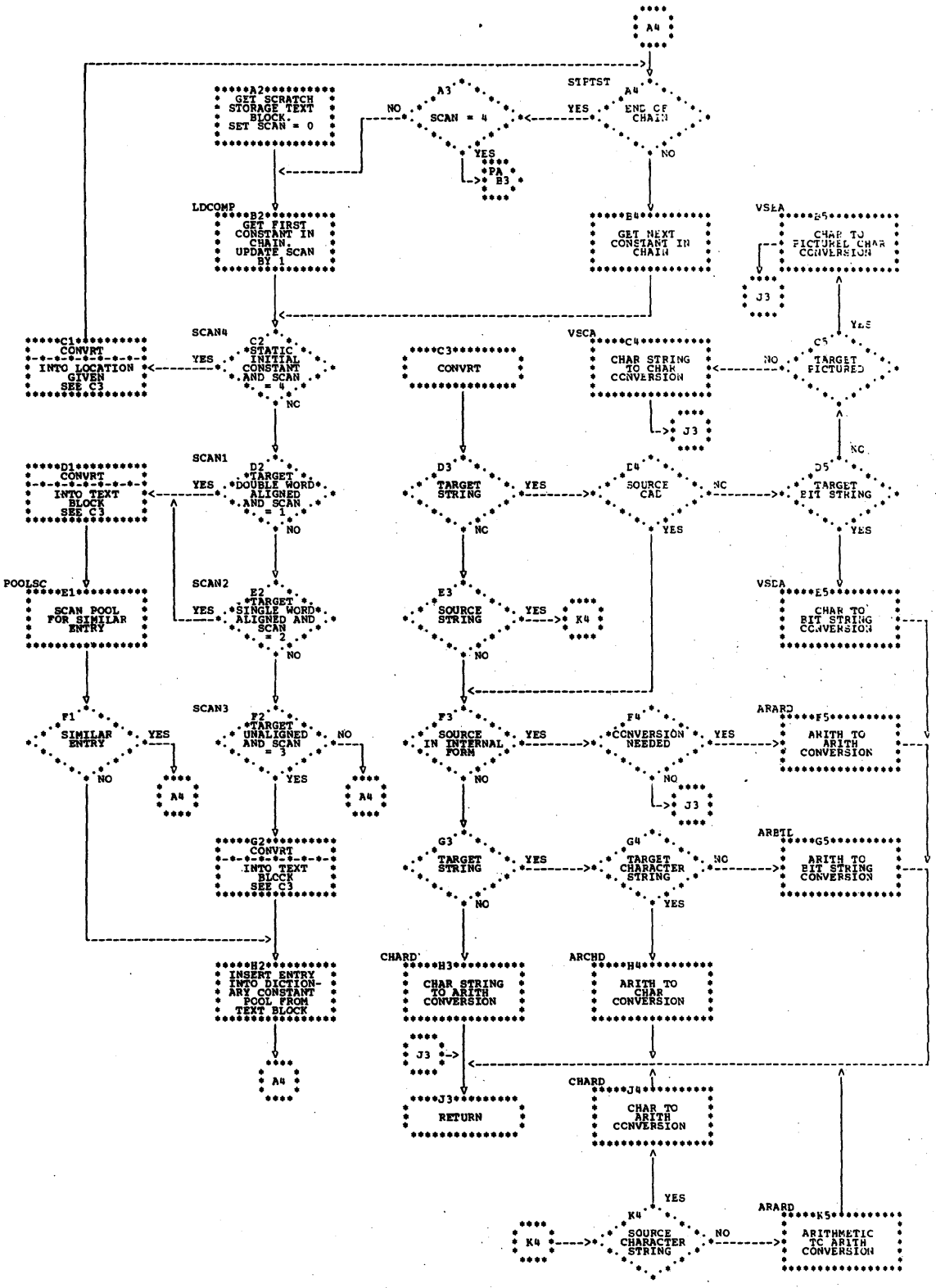

● Table LB. Phase LB Pseudo-Code Initial

Statement or Operation Type	Main Processing Routine	Subroutines Used
Scans text for PROCEDURE, BEGIN, and ALLOCATE triples	SCAN	SCINIT, SC1, SC3, SC5 (all in KT), SFSCAN, ENDRTN, MAIN, SCAUTO, AUTO12
Scans automatic chain	SCAUTO	MAIN
Processes INITIAL attribute dictionary items	MAIN	CNSTWK, ARRENT
Processes IDV statements	AUTO12	ARRENT
Processes INITIAL arrays	ARRENT	CNSTWK

Table LB1. Phase LB Routine/Subroutine Directory

Routine/Subroutine	Function
ARRENT (LC)	Generates triples and pseudo-code for arrays declared with INITIAL.
AUTO12	Processes IDV (initial dope vector) statements.
CNSTWK	Creates initialization triples.
ENDRTN	Releases phase and scratch storage.
MAIN	Processes INITIAL attribute dictionary items.
SCAN	Scans text for PROCEDURE, BEGIN, and ALLOCATE triples.
SCAUTO	Scans AUTOMATIC chain.
SFSCAN	Scans through second file statements.

Table LD. Phase LD Pseudo-Code Initial

Statement or Operation Type	Main Processing Routine	Subroutines Used
Scans the STATIC chain for any variable with the INITIAL attribute	STATIC	ENDRTN, ARRENT, CNSTWK, LOVNAS, STRADD

Table LD1. Phase LD Routine/Subroutine Directory

Routine/Subroutine	Function
ARRENT	Processes the initial value string for arrays.
CNSTWK	Creates constant entries for initial values.
CNVERT	Converts decimal integer constants used as replication factors to fixed binary.
ENDRTN	Releases the phase and scratch storage.
GAA1	Scans array initial value string.
GAC3	Makes slot for converted constant for arrays.
LOVNAS	Calculates the equivalent length in bits or bytes of a constant for variable or adjustable length strings.
STATIC	Scans the STATIC chain.
STRADD	Addresses elements of structures.
ST0006	Locates initial value list.
ST0088	Resets initial value entry.
ST9999	Makes slot for converted constant for scalars.

● Table LG. Phase LG Pseudo-Code DO Expansion

Statement or Operation Type	Main Processing Routine	Subroutines Used
Scans text	LG0002	SC1 (KT)
For iterative DO triples, pushes down stack and examines control variable	LG0011	PSHDWN, SC5 (KT), CVSCAN
Pushes down DO stack	LG0013	PSHDWN
For iterative DO' and DO' triples, pushes up stack and removes top entry	LG0012	EXPEVL, POPUP
For CV triples, reverts to normal scan	LG0015	EXPEVL
For TO and TO' triples, examines argument and assigns to temporary, if necessary	LG0017	EXPEVL, TESTOP
For BY and BY' triples, examines expression and determines signs of constants; assigns variables to temporary	LG0019	EXPEVL, TESTOP
For WHILE and WHILE' triples, marks loop as iterative; generates test triples	LG0021	CODE3
DO EQUALS triples, assigns expression as a temporary; generates code to control loop if end of specification	LG0024	CODE2, TESTOP
Sets up control variable text in DO stack	CVSCAN	CVCOPY, PSTYP0, PSTYP1
Generates loop control code	CODE2	CVCODE, DICENT, COMPAR, SWITCHP, LMV3AU, LMV3A5, PSTYP0, PSTYP1
Tests expression result type and assigns to temorary if not constant	TESTOP	DICCHN, LMV3A5
Moves text from DO stack to output	CVCODE	LMV3AU

Table LG1. Phase LG Routine/Subroutine Directory

Routine/Subroutine	Function
CODE2	Generates loop control code.
CODE3	Generates loop control code for WHILE.
COMPAR	Generates triples to test upper limit control expression.
CVCODE	Moves text from DO stack to output.
CVCOPY	Moves input text to DO stack.
CVSCAN	Sets up control variable text in DO block.
DICCHN	Chains dictionary entries.
DICENT	Makes a dictionary entry.
EXPEVL (LH)	Analyzes expression to determine result type.
LG0000	Initializes phase.
LG0002	Scans text.
LG0010	When EOP triple encountered, releases scratch storage and passes control to next phase.
LG0011	For iterative DO triples pushes down stack and examines control variable.
LG0012	For iterative DO' and DO' triples pushes up stack and removes top entry.
LG0013	Pushes down DO stack.
LG0015	For CV triples reverts to normal scan.
LG0017	For TO and TO' triples, examines argument and assigns to temporary if necessary.
LG0019	For BY and BY' triples, examines expression and determines sign of constants. Assigns variables to temporary.
LG0021	For WHILE and WHILE' triples, marks loop as iterative and generates text triples.
LG0022	When WHILE' triple encountered, branches to generate comparison triples.
LG0024	For DO EQUALS triples, assigns expression to a temporary: generates code to control loop if at the end of specification.
LMV3AU	Moves triples to output.
LMV3A5	Moves one triple to output.
POPUP	Removes item from DO stack.
PSHDWN	Pushes down DO stack and initializes new stack entry.
PSTYP0/PSTYP1	Test pseudo-variable argument type.
SWITCHP	Changes DO stack text markers.
TESTOP	Tests expression result type and assigns to temporary if not constant.

● Table LS. Phase IS Pseudo-Code Expression Evaluation

Statement or Operation Type	Main Processing Routine	Subroutines Used
Scans text and branches to processing routines; marks phase LW and releases control to next phase	LB0	ARITH, FUNCT, LZZ1, MOVEPC, SCAN (KT), STRING, SUBSPT
Calculates result type and generates pseudo-code for +, -, *, /, prefix +, prefix -, compare operators, and ADD, MULTIPLY, and DIVIDE functions	ARITH, ARITH2	ADDSTK, ASSIGN, CONVT, DICDES, EXPONT, GENRPD, GETADX, GETFR, GETGR, MOVEPC, RELSTK, SETCPX, STRING, SWOP
Calculates result type for string operators	STRING	LZZ1, MOVEPC, STALRG
Inserts symbolic register in subscript triple and stacks result	SUBSPT	ADDSTK, DICDES
Inserts workspace description in TMPD triples after function, and stacks result. Stacks arguments for ADD, MULTIPLY, and DIVIDE functions. Adds pseudo-variable markers to stack	FUNCT	ADDSTK, ARITH, DICDES, GETFR, GETGR, SCAN(KT)
Calculates results types and generates pseudo-code for ** operator. Generates calling sequences to library subroutines for complex arithmetic	EXPONT	ADDSTK, ARITH2, CONVT, GETADX MOVEPC, STALRG, SWOP
Calculates target type and generates assignment triple for conversion; sets dictionary entries for constants	CONVT	ADDSTK, ASSIGN, GETFR, MOVEPC, STALRG
Interchanges operands; optionally loads first operand	SWOP	GETADX, GETFR, GETGR
Obtains free floating or fixed arithmetic register; stores it, if necessary	GETFR, GETGR	GETADX, STALRG
Adds items to, and releases items from intermediate result stack	ADDSTK, RELSTK	None
Generates calling sequence for complex * and / operators, supervises complex arithmetic	SETCPX	EXPONT, GETADX
Inserts TMPD triples after zero operands	LZZ1	RELSTK, SCAN(KT)

Table LS1. Phase LS Routine/Subroutine Directory

Routine/Subroutine	Function
ADDSTK (LT)	Adds items to intermediate result stack.
ARITH/ARITH2 (LT)	Calculate result type and generate code for +, -, *, /, prefix +, prefix -, compare operators, and ADD, MULTIPLY, and DIVIDE functions.
ASSIGN	Generates an assignment triple and TMPD in the output text.
CONST	Sets up dictionary entry for constant operand.
CONVT	Calculates target type and generates assignment triple for conversion.
DICDES	Constructs operand description from dictionary entry.
EOP2	Marks phases wanted/not wanted and releases control.
EXPONT (LU)	Calculates result type and generates pseudo-code for ** operator, and generates calling sequence to Library subroutines for complex arithmetic.
FCTDES	Inserts workspace description in TMPD triples after function, and stacks result.
FUNCT	Inserts workspace description in TMPD triples after function, and stacks result. Stacks arguments for ADD, MULTIPLY, and DIVIDE functions. Adds pseudo-variable markers to stack.
FXC1 (LT)	Generates fixed binary pseudo-code.
GENRPD	Generates pseudo-code for packed decimal operations.
GETADX (LT)	Sets up address of pseudo-code instruction.
GETFR/GETGR (LT)	Obtain free floating or fixed arithmetic register; store it, if necessary.
LB0	Scans text and branches to processing routines.
LBE21 (LT)	Tests for operand conversions and constants.
LBFL1 (LT)	Generates floating pseudo-code.
LZZ1	Inserts TMPD triples after zero operands.
MOVEPC	Moves pseudo-code to output text.
PSI	Adds pseudo-variable marker to stack.
RELSTK (LT)	Releases items from intermediate result stack.
SETCPX (LU)	Generates calling sequence for complex * and / operators; supervises complex arithmetic.
STALRG	Generates pseudo-code to store all arithmetic registers currently in use.
STRING	Calculates result types for string operators.
SUBSPT	Inserts symbolic register in subscript triple and puts result in stack.
SWOP	Interchanges operands and optionally loads first operand.

• Table LV. Phase LV Pseudo-Code String Utilities

Statement or Operation Type	Main Processing Routine	Subroutines Used
Initializes module; releases control to next module	STRUT0	None
Converts data item to string; calculates string length	STRUT1	SCAN (KT), STRUT2
Produces a string dope vector description from a standard string description	STRUT2	None

Table LV1. Phase LV Routine/Subroutine Directory

Routine/Subroutine	Function
LSUT17	Tests whether string length is greater than 256, and if necessary generates fixed length calling sequence.
LSUT22	Tests whether string dope vector result is required.
LSUT26	Generates any assignment and TMPD triples.
LSUT27	Sets up assignment and TMPD triples.
STUT0	Initializes module; releases control to next module.
STRUT1	Converts data item to string type; calculates string length.
STRUT2	Produces string dope vector description from standard string description.
ZSTUT1	Transfer vector to STRUT1.
ZSTUT2	Transfer vector to STRUT2.

● Table LX. Phase LX Pseudo-Code String Handling

Statement or Operation Type	Main Processing Routine	Subroutines Used
Initializes phase, scans text and branches to processing routines; releases control to next phase	BEGIN	FUNPT, SCAN (KT), STROP, SUBSPT, TMPDT
Processes TMPD triples. Arithmetic type TMPDs are ignored. String TMPDs are replaced by the top item from the string stack	TMPDT	GETMPD, MOVSEL, RELSTK, SCAN (KT) SETMPD
Processes function and function argument triples. Arithmetic type functions are ignored. Dictionary entries are created for the results of string type functions. A library calling sequence is generated for the BOOL function using the mechanism for packed bit cperations. The result descriptions are added to the string stack	FUNT	ADDSTK, DICDES, GETADS, GETMPD, MOVEPC, RELSTK, SCAN (KT), SETMPD, STROP
Processes subscript triples. Arithmetic type subscripts are ignored. A symbolic register or workspace offset is added to string type subscript triples and the string description is added to the string stack	SUBSPT	ADDSTK, DICDES, SBGNOR, SCAN (KT)
Processes string operations CONCAT, AND, OR, NOT and comparisons with string type operands. For simple cases, in-line pseudo-code is generated; otherwise calling sequences to the library are generated. The results are added to the string stack.	STROP	ADDSTK, DICDES, GETADS, GETADX, GETMPD, MOVEPC, MOVSEL, RELSTK, SCAN(KT), STRUT(LV), ASSIGN, GETWS4, GETWS8, SBGNER, SBGNR

Table LX1. Phase LX Routine/Subroutine Directory

Routine/Subroutine	Function
ADDSTK	Adds strings to the intermediate string result stack.
ADSTR (LY)	Constructs dope vector and string descriptions from a given descriptor which may describe either a string, or its dope vector.
ASSIGN	Generates an assignment triple and associated TMPDs in the output text.
BEGIN	Main controlling routine for phase.
DICDES	Constructs operand description from dictionary entry.
FUNPT	Processes result returned by functions.
FUNT	Processes funtion and function argument triples.
GETADS/GETADX	Construct address part of pseudo-code instruction.
GETMPD	Constructs operand description from TMPD triples.
GETWS4	Allocates 4 bytes of aligned workspace.
GETWS8	Allocates 8 bytes of aligned workspace.
LB	Terminates phase at end of program.
LIB1	Generates Library calls for string operations.
LIL2 (LY)	Generates pseudo-code for NOT operation.
LIL3 (LY)	Generates pseudo-code for concatenation operation.
LIL6 (LY)	Generates pseudo-code for comparison operation.
LIL8 (LY)	Generates pseudo-code for AND/OR operation.
L11	Generates pseudo-code to convert to string.
MOVEPC	Moves pseudo-code from buffer to output text.
MOVSEL	Moves SELL triples to output text.
MVC1/MVC2(LY)	Creates MVC instructions.
RELSTK	Removes strings from the intermediate string result stack.
SBGNER	Gets next even-odd pair of symbolic registers.
SBGNOR	Gets next symbolic register.
SBGNR	Gets next symbolic register.
SETMPD	Constructs TMPD triples from description.
STROP	Processes string operations CONCAT, AND, OR, NOT, and comparisons with string type operands.
SUBSPT	Processes subscript triples.
TMPDT	Processes TMPD triples.
T5	Sets flags for triple types.

● Table MA. Phase MA Pseudo-code Translate and Verify Functions

Statement or Operation Type	Main Processing Routine	Subroutines Used
Scans source text	Phase KT (SCAN)	SC1(KT)
Function marker triple (FNC) processor	FUNC	SC2(KT), SC3(KT), SC5(KT)
Double coma triple (FNCM) processor	SDCOM	SC2(KT), SC3(KT), SC5(KT)
Function prime triple (FNC') processor	SFNPM	SC5(KT)
TRANSLATE function processor	TV10A	TV31A, TV11
Creates compile time table	TV11	TV13A, TV31A
Converts constant from internal to external form and vice versa	TV13A	None
Initializes VERIFY compile time table	TV15A	TV13A
VERIFY function floating table build	TV17A	MV3(KT)
Pseudo-code build for VERIFY function	TV18A	MV3(KT)
Floating table build for TRANSLATE	TV21A	MV3(KT)
TRANSLATE function in line code	TV22A	MV3(KT)
VERIFY function processor	TV24A	TV11, TV31A
Tests for duplicate character constant	PTTRAN	ERROR
Floating table search	TV31A	None
Library calling sequence generator	TV35A	MV3(KT), TEMPW
Updates function dictionary reference	TV38A	None
Obtains workspace	TEMPD	None

• Table MA1. Phase MA Routine/Subroutine Directory

Routine/Subroutine	Function
ERROR	Produces error message
FUNC	Processes function marker triple (FNC)
PTTRAN	Tests for duplicate character constant
SDCOM	Processes double coma triple (FNCM)
SFNPM	Processes function prime triple (FNC')
TEMPD	Obtains workspace
TEMPW	Gets temporary workspace
TV10A	Processes TRANSLATE function
TV11	Creates compile time table
TV13A	Converts constant from internal to external form and vice versa
TV15A	Initializes VERIFY compile time table
TV17A	Builds VERIFY function floating table
TV18A	Builds pseudo-code for VERIFY function
TV21A	Builds floating table for TRANSLATE
TV22A	TRANSLATE function in line code
TV24A	Processes VERIFY function
TV31A	Searches for floating table
TV35A	Generates library calling sequence
TV38A	Updates function dictionary reference

• Table MB. Phase MB Pseudo-code Pseudo-Variables

Statement or Operation Type	Main Processing Routine	Subroutines Used
Scans source text	MB0001	SC1 (KT)
PSI operator; starts new entry in stack for pseudo-variable	MB0011	SWITCH
PSI' operator; completes stack entry and generates code for data list items	MB0012	SWITCH, TARGET
Assign completes stack and rescans group of assignments, putting target descriptions out in correct sequence; generates code for pseudo-variables in stack	MB0013	DRFTMP, MMV3A5, MVTMPD, OUTMPD, TARGET
Multiple assign; places only target descriptors in stack	MB0014	MVTMPD
Constructs pseudo-variable stack entry	MB0020	MVTMPD
Places temporary descriptor in output	OUTMPD	MMV3A5
Gets temporary workspace for pseudo-variable, if necessary	TARGET	GETWKS

Table MB1. Phase MB Routine/Subroutine Directory

Routine/Subroutine	Function
DRFTMP	Makes temporary descriptor from a dictionary reference.
GETWKS	Obtains workspace to accommodate a variable of given type.
MB0001	Scans source text.
MB0004	Multi-switch for triples of interest.
MB0010	On reaching end-of-text marker, releases remaining block, and releases control of phase.
MB0011	PSI operator; starts new entry in stack for pseudo-variable.
MB0012	PSI' operator; completes stack entry and generates code for data list items.
MB0013	ASSIGN; completes stack and rescans group of assignments, putting target descriptions out in correct sequence, generates code for pseudo-variable in stack.
MB0014	Multiple ASSIGN; places any target descriptors in stack.
MB0020	Constructs pseudo-variable stack entry.
MB1310	Resets input pointer to start of sequence of ASSIGNS.
MB1311	Rescans ASSIGNS and associated TMPDS from stack in reverse order.
MB1316	Tests for end of stack.
MB1318	Tests for pseudo-varaible TMPD.
MB1320	Generates code for pseudo-variable.
MMV3A5	Moves one triple to output.
MVTMPD	Places temporary descriptor in stack.
OUTMPD	Places temporary descriptor in output string.
SWITCH	Changes scanning table.
TARGET	Obtains temporary workspace for pseudo-variable, if necessary.

• Table MD. Phase MD Pseudo-Code In-Line Functions

Statement or Operation Type	Main Processing Routine	Subroutines Used
Scans text	Phase KT (SCAN)	None
Builds up function stack	LFARIN	None
Builds up argument stack	LFCOM	None
Moves generated code to output block	LFMOVE	MV3(KT)
Generates in-line code and library calling sequences	LFEOF2	SNAKE,ROPE

Table MD1. Phase MD Routine/Subroutine Directory

LFARI1	Continues scan for in-line functions.
LFARIN	Builds up function stack.
LFCOM	Builds up argument stack.
LFDR	Unpacks dictionary reference of argument when argument triple found.
LFEOF2	Calls subroutines to generate in-line code.
LFIGN	Removes triple from text if inside an in-line function.
LFSPEC	Branches if IGNORE triple or not an in-line function.
ROPE	Generates code for STRING function.
SNAKE	Generates code for ADDR function.

• Table ME. Phase ME Pseudo-Code In-Line Functions

Statement or Operation Type	Main Processing Routine	Subroutines Used
Scans and moves text	Phase KT (SCAN)	SC1,SC2,SC3,SC5,MV3
Builds up function stack	SFUNC	ZDRAOF
Constructs result TDB and branches to routines for INDEX, UNSPEC, COMPLETION, and STATUS	SFNPM	MS4,MS5,MSB,RTAA,RTAB,INDEX, ILUNSP,EVENT,ZDRAOF,STATUS
Deletes current triple	SIGN	None
Builds up argument stack	SDCOM	ZDRAOF
Inspects arguments and branches to appropriate subroutine	MSB	RTB,RTC,RTD,RTE,RTF,RTG,RTH

Table ME1. Phase ME Routine/Subroutine Directory

Routine/Subroutine	Function
EVENT	Generates in-line code for COMPLETION function.
FINISH	Passes control to the next phase.
ILUNSP	Generates in-line code for the UNSPEC function.
INDEX	Generates in-line code for optimizable invocations of the function INDEX.
MSB	Calls subroutines to generate in-line code.
MSG	Resets current flag and continues scan.
RLCTOF	Releases module and passes to next phase.
RTAA	Generates in-line code when the result is in a register by name, and the second argument is constant.
RTAB	Generates in-line code when the result is in a register by name, and the second argument is variable.
RTB	Generates in-line code for the case when the first argument is an aligned bit string, and the second and third arguments are both constant.
RTC	Generates in-line code in the case when the first argument is a character or aligned bit string, the second argument is constant and the third variable.
RTD	Generates in-line code when the first argument is a character or aligned bit string, the second is constant and the third is not present.
RTE	Generates in-line code when the first argument is a packed bit string, and the second is constant.
RTF	Generates in-line code when the first argument is a character string, and the second and third are both variable.

Table ME1. Phase ME Routine/Subroutine Directory (continued)

Routine/Subroutine	Function
RTG	Generates in-line code when the first argument is a character string, the second is variable, and the third is not present.
RTH	Generates in-line code when the first argument is a bit string, and the second is variable.
SBERR	Error routine.
SBGNER	Gets the next even register and sets the even/odd bit on.
SBGNOR	Gets the next odd register and sets the even/odd bit on.
SBGTNR	Gets the next available symbolic unassigned register.
SCAN	Scans for the next triple of interest.
SCINIT	Initializes pointers and text blocks.
SDCOM	Builds up argument stack.
SFNPM	Generates in-line code.
SFUNC	Builds up function stack.
SIGN	Deletes current triple.
STATUS	Generates code for STATUS function.
STRUT2	Constructs a string dope vector.
SUB1	Generates code to place the address of the first argument plus a literal offset into a symbolic register.
SUB3	Generates a ST and DROP instruction, optionally followed by a MVI instruction.
SUB4	Constructs a dictionary entry for the constant JJ, and generates an MVC instruction.
SUB5	Generates two STH instructions, followed by a DROP instruction.
SUB6	Generates an RX instruction to operate on a TDB by a register, optionally followed by an instruction to drop any register used in addressing the TDB item.
SUB7L	Generates SR, SLDL, OR instructions.
SUB7R	Generates SR, SRDL, OR and DROP instructions.
SUB9	Calculates correct values for ILEN, IOFF and Y.
ZDRAOF	Converts a dictionary reference to an absolute address.
ZURCOF	Releases scratch core.

• Table MG. Phase MG Pseudo-Code In-Line Functions 1

Statement or Operation Type	Main Processing Routine	Subroutines Used
Scans text	PHASE KT (SCAN)	None
Builds up function stack	LFARIN	None
Builds up argument stack	LFCOM	None
Move generated code to output block.	LFMOVE	MV3 (KT)
Generates in-line code	LFEOF2	ABBFLL, ABBFLS, ABSFB, ABSFD, ALLOC2, CEILB, CEILD, CEILL, CEILS, CMPLXB, CMPLXD, CMPLXL, CNASTR, CNVINT, CONJGB, CONJGD, CONJGL, CONJGS, ERRFUN, FLOORB, FLOORD, FLOORL, FLOORS, IMAGB, IMAGFD, IMAGL, IMAGS, REALB, REALFD, REALL, REALS, SBGTNR, TRUNCB, TRUNCD, TRUNCL, TRUNCS, UNSPEC, UTTEMP

Table MG1. Phase MG Routine/Subroutine Directory

Routine/Subroutine	Function
ABBFLL	Generates in-line code for ABS function with long floating-point argument.
ABBFLS	Generates in-line code for ABS function with short floating-point argument.
ABSFB	Generates in-line code for ABS function with fixed binary argument.
ABSFD	Generates in-line code for ABS function with fixed decimal argument.
ALLOC2	Generates in-line code for ALLOCATION function.
CEILB (MB)	Generates in-line code for the CEIL function with fixed binary argument.
CEILD (MH)	Generates in-line code for the CEIL function with fixed decimal argument.
CEILL (MB)	Generates in-line code for CEIL function with long floating-point argument.
CEILS (MH)	Generates in-line code for the CEIL function with short floating-point argument.
CMPLXB	Generates in-line code for COMPLEX function with fixed binary argument.
CMPLXD	Generates in-line code for COMPLEX function with fixed decimal argument.
CMPLXL	Generates in-line code for COMPLEX function with long floating-point argument.
CNASTR	Constructs assignment triple and associated TMPDS.
CNVINT	Converts a decimal integer constant to fixed binary.

Table MG1. Phase MG Routine/Subroutine Directory (cont'd)

Routine/Subroutine	Function
CONJGB	Generates code for the CONJG function with fixed binary arguments.
CONJGD	Generates in-line code for the CONJG function with fixed decimal arguments.
CONJGL	Generates in-line code for the CONJG function with long floating-point arguments.
CONJGS	Generates in-line code for the CONJG function with short floating-point arguments.
ERRFUN	Aborts if Phase IM discovers an error in a function.
FLOORB (MH)	Generates in-line code for the FLOOR function with fixed binary argument.
FLOORD (MH)	Generates in-line code for the FLOOR function with fixed decimal argument.
FLOORL (MH)	Generates in-line code for the FLOOR function with long floating-point argument.
FLOORS (MH)	Generates in-line code for the FLOOR function with short floating-point argument.
IMAGB	Generates in-line code for IMAG function with fixed binary argument.
IMAGFD	Generates in-line code for IMAG function with fixed decimal argument.
IMAGL	Generates in-line code for IMAG function with long floating-point argument.
IMAGS	Generates in-line code for IMAG function with short floating-point argument.
LFARIN	Builds up function stack.
LFARI1	Continues scan for in-line functions.
LFCOM	Builds up argument stack.
LFDR	Unpacks dictionary reference of argument when argument triple found.
LFEOF2	Calls subroutines to generate in-line code.
LFEOF3	Depending on start of argument list, branches to produce in-line code.
LFIGN	Removes triple from text if inside an in-line function.
LFMOVE	Moves generated code to output block.
LFSPEC	Branches if IGNORE triple or not an in-line function.
REALB	Generates in-line code for REAL function with fixed binary argument.

Table MG1. Phase MG Routine/Subroutine Directory (cont'd)

Routine/Subroutine	Function
REALFD	Generate in-line code for REAL function with fixed decimal argument.
REALL	Generate in-line code for REAL function with long floating-point argument.
REALS	Generates in-line code for REAL function with short floating-point argument.
SBGTNR	Get next available symbolic register.
TRUNCB (MH)	Generates in-line code for the function TRUNC with fixed binary argument.
TRUNCD (MH)	Generates in-line code for the TRUNC function with fixed decimal argument.
TRUNCL (MH)	Generates in-line code for the TRUNC function with long floating-point arguments.
TRUNCS (MH)	Generates in-line code for the TRUNC function with short floating-point argument.
UNSPEC (MH)	Generates in-line code for the UNSPEC function.
UTTEMP	Gets a required amount of temporary work space.

• Table MI. Phase MI Pseudo-Code In-Line Functions 2

Statement or Operation Type	Main Processing Routine	Subroutines Used
Scans text	PHASE KT (SCAN)	None
Builds up function stack	LFARIN	None
Builds up argument stack	LFCOM	None
Move generated code to output block	LFMOVE	MV3 (KT)
Generates in-line code	LFEOF2	MAXB, MAXD, MAXL, MAXS, MINB, MIND, MINL, MINS, MODB, MODD, MODL, MODS, ROUNDB, ROUNDD, ROUNDL, ROUNDS

Table MI1. Phase MI Routine/Subroutine Directory

Routine/Subroutine	Function
LFARIN	Builds up function stack.
LFCOM	Builds up argument stack.
LFEOF2	Calls subroutines to generate in-line code.
LFMOVE	Moves generated code to output block.
MAXB/MINB (MJ)	Generate code for MAX/MIN function with fixed binary arguments.
MAXD/MIND (MJ)	Generate in-line code for MAX/MIN function with fixed decimal arguments.
MAXL/MINL (MJ)	Generate in-line code for MAX/MIN function with long floating-point arguments.
MAXS/MINS (MJ)	Generate in-line code for MAX/MIN function with short floating-point arguments.
MODB (MJ)	Generates in-line code for MOD function with fixed binary arguments.
MODD (MJ)	Generates in-line code for MOD function with fixed decimal arguments.
MODL (MJ)	Generates in-line code for MOD function with long floating-point arguments.
MODS (MJ)	Generates in-line code for MOD function with short floating-point arguments.
ROUNDB	Generate in-line code for ROUND function with fixed binary argument.
ROUNDD	Generates in-line code for ROUND function with fixed decimal argument.
ROUNDL	Generate in-line code for ROUND function with long floating-point arguments.
ROUNDS	Generate in-line code for ROUND function with short floating-point arguments.

• Table MK. Phase MK Pseudo-Code In-Line Functions 3

Statement or Operation Type	Main Processing Routine	Subroutines Used
Scans text	PHASE KT (SCAN)	None
Builds up function stack	LFARIN	None
Builds up argument stack	LFCOM	None
Move generated code to output block	LFMOVE	MV3 (KT)
Generates in-line code	LFEOF2	DIM, HBOUND, LBOUND, LENGT, SIGNFB, SIGNFD, SIGNL, SIGNS, FREBIF

Table MK1. Phase MK Routine/Subroutine Directory

Routine/Subroutine	Function
DIM	Generates code for DIM function.
FREBIF	Generates code for FREE function.
HBOUND	Generates code for HBOUND function.
LBOUND	Generates code for LBOUND function.
LENGT	Generates code for LENGTH function.
LFARIN	Builds up function stack.
LFCOM	Builds up argument stack.
LFEOF2	Calls subroutines to generate in-line code.
LFMOVE	Moves generated code to output block.
SIGNFB	Generates code for SIGN function with fixed binary argument.
SIGNFD	Generates code for SIGN function with fixed decimal argument.
SIGNL	Generates code for SIGN function with short floating point argument.
SIGNS	Generates code for SIGN function with short floating point argument.

● Table ML. Phase ML Pseudo-Code Calls and Functions

Statement or Operation Type	Main Processing Routine	Subroutines Used
Scans text	PHASE KT (SCAN)	None
Identifies argument of procedure invocation	FPFNAR	None
Selects generic built-in function	FPBIF	FPARD1
Selects PL/I generic entry name	FPGAR	FPARD2, FPARD3, GNSECO

Table ML1. Phase ML Routine/Subroutine Directory

Routine/Subroutinr	Function
FPA01	Scans for next argument.
FPARD1	Obtains parameter descriptions relating to built-in function arguments.
FPARD2	Obtains successive parameter descriptions relating to the entry description of a PL/I generic procedure.
FPARD3	Obtains and stacks full parameter description of a PL/I generic procedure.
FPBIF	Selects generic built-in functions.
FPEPCO	Constructs an entry parameter.
FPFNAR	Identifies arguments of procedure invocations.
FPGAR	Selects PL/I generic entry name.
GNFM2	Replaces generic reference testing for uniqueness.
GNSECO	Makes entry in stack of parameter descriptions.

● Table MM. Phase MM Pseudo-Code Calls and Functions

Statement or Operation Type	Main Processing Routine	Subroutines Used
Scans text	PHASE KT (SCAN)	None
Scans list, counts arguments and identifies storage class	CFCALL	CFARID, CFFBIR, CFFDVS, CFMVTR, CFMVCD
Rescans list and generates calling sequence for library routine	CFCFSS	CFARHA, CFCALP, CFBIFH, CFMLBR, CFMVCD, CFNEST, UTTMPW, CFA1F1, BASED

Table MM1. Phase MM Routine/Subroutine Directory

Routine/Subroutine	Function
BASED (MO)	Generates relocation code for based variables.
BEGIN	Initializes phase.
CFALF1 (MO)	Places address of invoked routine at the head of its argument list.
CFARHA	Generates calling sequence.
CFARID (MO)	Counts arguments and sets STATIC/AUTO flag.
CFBIFH	Further built-in function identification with relevant parameter setting.
CFB04	Restores previous environment.
CFB021	Tests nature of function found.
CFB036	Restores pointer to start of invocation.
CFCALL	Scans lists, counts arguments, identifies storage class.
CFCALP	Completes calling sequence and, if necessary, generates code to initialize dope vector.
CFC03C	Tests for nested function.
CFCFSS	Rescans list and generates calling sequence for Library routine.
CFEXIT	Transfer vector after first scan.
CFFBIR	Identifies built-in functions, sets parameters for calling sequence generation.
CFFDVS (MN)	Reserves output text area for generation of code to initialize dope vector when a function returns a string.
CFL06	Generates code to set up result dope vector.
CFL043	Generates code to place result address in argument list.
CFMLBR (MN)	Generates code to move a skeleton parameter list which is greater than 256 bytes.
CFMVCD	Generates pseudo-code into the output text block.
CFMVTR	Generates triple into the output text block.
CFNEST	Handles a nested situation.
CFY007	Sets parameters to produce special calling sequences.
UTTMPW (MN)	Allocates one word of workspace.

• Table MP. Phase MP Pseudo-Code BUY Reorder

Statement or Operation Type	Main Processing Routine	Subroutines Used
Main scan routine for phase	MP1	SCAN(KT), ZDRFAB, ZTXTRF, ZUERR

• Table MP1. Phase MP Routine/Subroutine Directory

Routine/Subroutine	Function
UT05	Adds SELL dictionary reference to SELL list if not already there.
MP1	Main controlling routine for rearranging BUY and SELL statements involved in obtaining VDAs for adjustable length string temporaries.
MP3	Processes EOP triple. Releases control of phase.
MP4	Processes BUYS triple.
MP4A	Processes BUYX triple.
MP8	Continues text scan if not string or arithmetic data, or not structure.
MP23	Continues scan of text.
MP26	Processes BUYS triple.
MP27	Processes BUY ASSIGN triple.
MP28	Processes BUY triple.
MP29	Processes SUBSCRIPT triple.
MP30	Processes ASSIGN triple.
MP31	Accesses top stack entry.
MP86	Tests triple for BUYX, and processes.
MP87	Scans for BUYS, BUY, and SELL triples.
MP5	Processes SELL triple.
SCAN(KT)	General scan routine.
ZDRFAB	Converts dictionary reference to absolute address.
ZTXTRF	Changes absolute address to a text reference.
ZUERR	Makes error message entries.

• Table MS. Phase MS Pseudo-Code Subscripts

Statement or Operation Type	Main Processing Routine	Subroutines Used
Scans text	SBSCAN	None
Calculates element offset	SBSTIH	SBASS, SBCOBI, SBGNOR, SBMVCD, SBNEST, SBSUBP, SBSUDV, SBXOP, UTTEMP, SBOPT, SBFSUB, UTTMPH
Checks subscript range	SBSBRN	None

• Table MS1. Phase MS Routine/Subroutine Directory

Routine/Subroutine	Function
SBASS	Updates scan pointer over an assignment.
SBCOBI (MT)	Converts subscript to binary integer.
SBCOMR (MT)	Handles COMR triple
SBERR (MT)	Puts error message into dictionary.
SBFSUB	Tests the FIRST flag setting if it is not already set, and exits unless FIRST was unset on entry
SBGNOR (MT)	Allocates an odd symbolic register.
SBMVCD (MT)	Generates pseudo-code and moves it into output text block.
SBNEST (MT)	Handles nested subscript situation.
SBOFFS (MT)	Handles OFS triple
SBOPT	Calculates element offset in optimizable cases.
SBSBRN (MT)	Checks subscript range.
SBSCAN	Branches to KT for scan.
SBSTIH	Generates code to calculate element offset.
SBSUBI	Saves array name.
SBSUBP (MT)	Handles end of subscript list.
SBSUDV	Generates code to set up the dope vector of an array of adjustable strings.
SBS05	Generates code to multiply subscript by multiplier.
SBS06	Compiles code to convert to fixed binary.
SBS002	Checks for occurrence of subscript.
SBS029	Generates code to multiply subscript by 4 or 8.
SBS059	Generates multiply halfword code modifications
SBTRID	Scans for comma, subscript prime, or subscript triple.
SCAN(KT)	Controlling scan of text.
UTTEMP (MT)	Allocates workspace.
UTTMPH(MT)	Gets two bytes of storage on a halfword boundary

• Table NA. Phase NA Pseudo-Code Branches, ON, Returns

Statement or Operation Type	Main Processing Routine	Subroutines Used
Initializes text block	NAINIT	SCINIT (KT)
Scans text for next triple of interest to user	NASC1, NASC2, NASC3	SC1, SC2, SC3 (all in KT)
Processes STOP statements	STOP	NAUT1
Processes EXIT statements	EXIT	NAUT1
Processes IF triples	IF	NAUTD, NAUT16, NAUT21, ZSTUT1
Processes ON triples	ON	NAUTD, NAUT6, NAUT16, SC5(KT)
Produces Library call at end of each PROCEDURE or BEGIN block in source text	PROCP, BEGINP	NAUT1
Processes RETURN triples	RETURN	NAUT1
Processes function RETURN statements for one data type	NA3002	NAUTB, NAUTCA, NAUT1, NAUT12
Processes function RETURN statements for more than one data type	NA3013	NAUTA, NAUTB, NAUTCA, NAUTD, NAUTF, NAUT1, NAUT7, NAUT8, NAUT9, NAUT11, NAUT12
Processes GOTO triples	GOTO	NAUTD
Processes GOLN triples	GOLN	NAUTD
Processes GOOB triples	GOOB	NAUT5, NAUTD, NAUT16, SC5 (KT)
Processes SIGNAL triples	SIGNAL	NAUTD, NAUT6, NAUT16, NAUT8, NAUT10, NAUT21
Processes REVERT triples	REVERT	NAUTD, SC5 (KT)

● Table NA1. Phase NA Routine/Subroutine Directory

Routine/Subroutine	Function
EXIT	Processes EXIT statements.
GOOB	Processes GOOB triples.
GOTO	Processes GOTO triples.
GOLN	Processes GOTO label number (GOLN) triples.
IF	Processes IF triples.
NAINIT	Initializes text blocks.
NASC1/NASC2/NASC3	Scan text for next triple of interest to user.
NAUTA	Generates pseudo-code to test switch value at RETURN (function value) statement for more than one data type.
NAUTB	Generates assignment triple to RETURN function result.
NAUTCA	Generates assignment triple set up by NAUTB.
NAUTD	Generates indicated pseudo-code.
NAUTF	Generates pseudo-code to branch to EQU value.

• Table NA1. Phase NA Routine/Subroutine Directory (cont'd)

Routine/Subroutine	Function
NAUT1	Generates call to indicated library routine.
NAUT2	Moves indicated pseudo-code, deletes current triple, continues text scan.
NAUT5	Makes dictionary entry for indicated library routine.
NAUT6	Updates current symbolic register value.
NAUT7	On entry, register BR points at an entry label dictionary entry. On normal exit from the routine, register BR points at the next label dictionary entry. Abnormal exit indicates that there are no further labels on the current PROCEDURE or ENTRY statement.
NAUT8	Bump EQU* value for branch pseudo-code item.
NAUT9	Bump return switch value to be used for current entry label.
NAUT11	For current entry label, generate appropriate EQU* pseudo-code item.
NAUT12	Converts current label dictionary reference to an absolute address.
NAUT16	Converts dictionary reference of triple second operand to absolute address, loads address into register BR.
NAUT17	Makes dictionary entry for maximum negative number.
NAUT18	Makes indicated dictionary entry.
NAUT21	Generates pseudo-code to compare source bit string, making library comparison routine dictionary entry, if necessary.
NA1100	Tests for SNAP.
NA1140	Using NAUTD, generates code for ON-units.
NA3002	Processes function RETURN statements for one data type.
NA3005	Outputs assignment triple.
NA3013	Processes function RETURN statements for more than one data type.
NA3003	Generates pseudo-code for branch and mask, labels.
NA8010	Converts ID to bit-string.
NA8012	Outputs pseudo-code. Compares bit-string to zero.
ON	Processes ON triples.
PROCP/BEGINP	Produce Library call at end of each procedure in source text.
RETURN	Processes RETURN triples.
REVERT	Processes REVERT triples.
SIGNAL	Processes SIGNAL triples.
STOP	Processes STOP triples.
ZSTUT1	String utility in Phase LV to provide a dope vector for a specified string.

● Table NG. Phase NG Pseudo-Code Operating System Services

Statement or Operation Type	Main Processing Routine	Subroutines Used
Processes ALLOCATE statements for based variables	ALOCAT	CALIB, FALUT1
Processes DELAY statements	DLAY	CALIB, INTEG, SCAN (KT)
Processes DISPLAY statements	DSPY	CALIB, CHAR, ENDLST, SCAN (KT), STORAD
Processes FREE statements for based variables	FREE	CALIB, FALUT1
Processes WAIT statements	WAIT	CALIB,INTEG,SCAN(KT),OPLAST

● Table NG1. Phase NG Routine/Subroutine Directory

Routine/Subroutine	Function
CALIB	Generates part of calling sequence and makes dictionary entry for Library routine.
CHAR (NH)	Converts a given argument to character string.
DLAY	Processes DELAY statements.
DSPY	Processes DISPLAY statements.
DSPY3	Tests that operand is character variable.
DSPY4	Makes dictionary entry for parameter list.
DSPY10	Scans for REPLY option.
ENDLST	Completes parameter list and makes dictionary entry for it.
FALUT1	Examines argument of ALLOCATE or FREE statements to see if variable is based and forms RDV in workspace to prepare for call to the library.
INTEG (NH)	Converts a given argument to an integer.
NG0	Scans to next statement.
OPLAST	Builds up parameter list in workspace.
STORAD	Stores an address in a parameter list.

● Table NJ. Phase NJ Pseudo-Code RECORD I/O

Statement or Operation Type	Main Processing Routine	Subroutines Used
Initialize Phase NJ by calling in block NK and initializing SCAN utility	STRTNJ	ZLOADW (AA), SCINIT (KT), SC1 (KT)
Initializes switches and flags to indicate start of new statement. Determines RECORD-oriented I/O verb and goes to appropriate routine	NUSTAT	TXTEST
Gets next triple of interest, converts to internal code and selects the appropriate routine to process it	SCNOPT	SC3 (KT), TXTEST, SCAN01, CMPERR TXTERR, ZABORT (AA)
Processes FILE option of RECORD-oriented I/O by placing dictionary reference of FILE Declare DCB in the appropriate slot of the parameter list. The parameter list is in STATIC if file constant, WORKSPACE if file parameter	FILOPT	TXTARG, DYNMPL, LAONLY, STDROP, CMPERR, TXTERR, WRKSPC, MVPSCD, ZTXTRF (KT), SYMREG, MV3 (KT)
Establishes the record dope vector (RDV) for the triple operand and places the address in the second slot of the parameter list unless the operand of the INTO triple is A varying string, in which case it places the address of the string dope vector of the operand in the second slot in the parameter list.	INTFRM	TXTARG, CMPERR, DYNMPL, LAONLY, STDROP, LAOSM2, CRDV, TXTERR, ZABORT (AA), WRKSPC, MVPSCD, TXTRF, SYMREG, ZDRFAB (AA), CALLIB, ZDICRF (AA), REFRDV, SCALAR, PNTRDR, BSDRDV

Table NJ. Phase NJ Pseudo-Code RECORD I/O (cont'd)

Statement or Operation Type	Main Processing Routine	Subroutines Used
Processes the operand of the LOCATE triple by establishing the RDV for the triple operand and placing this address in the second slot of the parameter list. It establishes the pointer qualifier of the based variable and saves this, either to be used, or to be overwritten by the operand of a SET triple. It establishes a compiler label and puts this in the third slot of the parameter list in order to tell the library where to return, so that code assigning the pointer value returned in the RDV to the saved pointer operand is avoided. It then initializes the based variables just allocated	LOCOPT	TXTARG, ZDICRF, PNTRDR, SCALAR, LOCRDV, CMPERR
Processes KEYTO option of RECORD-oriented I/O by verifying that its argument is a character string, then placing it in the appropriate parameter list slot, which may be in STATIC or WORKSPACE	KYTOPT	TXTARG, SCALAR, DYNMPL, LAONLY, STDROP, NXTMPD, ZSTUT2 (STRUT2 in LV), LAOSM2, LAOSM1, TXTERR, ZDRFAB (AA), SC5 (KT), WRKSPC, MVPSCD, MV3 (KT), SYMREG
Processes the KEY or KEYFROM option of RECORD-oriented I/O by converting the argument to a character string if it is not already a character string and placing the result in the appropriate parameter list slot; this is either in STATIC or WORKSPACE	KEYOPT	TXTARG, SCALAR, DYNMPL, LAONLY, STDROP, NXTMPD, ZSTUT1 (STRUT1 in LV), LAOSM1, LAOSM2, TMPSEL, TXTERR
Processes the IGNORE option of RECORD-oriented I/O by first checking that the argument is a scalar and then converting to a binary fixed integer if it is not already a binary fixed integer. The address of the argument is placed in the appropriate parameter list slot in STATIC or WORKSPACE	IGNOPT	TXTARG, SCALAR, CINTEG, DYNMPL, LAONLY, STDROP, MVPSCD, WRKSPC, MVTRPL, LAOSM1, ZDRFAB (AA), CMPERR, TMPREF, NXTMPD, MV3A (KT), WRKSPC, SYMREG, MV3 (KT)
Processes the event option of RECORD-oriented I/O by checking that the argument is a scalar EVENT variable and placing its address in the appropriate parameter list slot. The parameter list is either in STATIC or WORKSPACE, depending upon the storage class of the argument.	EVTOPT	TXTARG, DYNMPL, LAONLY, STDROP, NXTMPD, TMPREF, TXTERR, WRKSPC, MVPSCD, ZTXTRF (KT), SYMREF, MV3 (KT)

• Table NJ. Phase NJ Pseudo-Code RECORD I/O (cont'd)

Statement or Operation Type	Main Processing Routine	Subroutines Used
Processes the pointer operand of a SET triple. If part of a READ statement, the address of the pointer variable is placed in the second slot of the parameter list. If part of a LOCATE statement, the pointer operand overwrites the pointer taken from the based variable in the LOCATE statement, to be used in the pointer assignment code produced by ENDIO.	SETOPT	TXTARG, SCALAR, NXTMPD, DYNMPL, TMPREF, STDROP, TXTERR
At end of I/O statement, places REQUEST_CODE (i.e. IODEF) in static constant chain, puts STATIC parameter list in STATIC chain. Creates external Library calling sequence for RECORD-oriented I/O statement as follows: EPRM LA 1, PARM.LIST L 15, RECORD.IO.LIBRARY.ROUT BALR 14,15 EPRM If there is a WORKSPACE parameter list, it updates the MVC or parameter list from STATIC to WORKSPACE. It checks whether a LOCATE statement is being processed, for which it generates pseudo-code to assign the pointer value from the RDV to the pointer variable and to initialize the REFER variable of a self-defining structure. It generates an allocate triple to indicate possible initialization of TASK and/or EVENT variables, and a compiler label triple to mark the end of initialization code for the library. It generates any SELL triples accumulated throughout the statement on SELL chain. It cancels the RECORD-oriented I/O option triple codes from the SCAN TRT interest table. It gets the next triple of interest and goes to NUSTAT to process as a new statement.	ENDIO	ZDICRF (AA), LAONLY, LAOSM1, CALLIB, MVPSCD, ZTXTAB (AA), SELL, SC3 (KT) SYMREG, TMPREF, ZDRFAB, MVTRPL, RCBCMN

●Table NJ. Phase NJ Pseudo-Code RECORD I/O (cont'd)

Statement or Operation Type	Main Processing Routine	Subroutines Used
Indicates presence of NOLOCK option.	NLKOPT	None
Delete the SELL triple encountered during scan of RECORD-oriented I/O statement but puts dictionary reference in the SELL chain so that SELL triple can be regenerated at end of I/O statement	SELL routine at SVSELL or TMPSELL entry point	ZDRFAB (AA), MV3A (KT)
At end of program, releases own modules and turns control over to next requested phase.	PRGEND	RLSCTL

Table NJ1. Phase NJ Routine/Subroutine Directory

Routine/Subroutine	Function
BSDRDV(NK)	Entry point to CRDV routine which marks it as processing a based variable in an INTO or FROM option.
CALLIB	Creates pseudo-code to call library routine; indicates call in dictionary if not previously noted.
CINTEG	Checks whether argument is a binary fixed integer.
CMPERR	Indicates compiler error and ABORT, error code in HOLD register.
CRDV (NK)	Constructs a record dope vector (RDV) entry in WORKSPACE. If the dope vector descriptor bit is on, then the routine generates a library call to generate the RDV. If the variable has static extents and is not a string, the RDV is constructed from information in the RDV dictionary entry. If the variable is a string, then the RDV is constructed from its string dope vector.
DEFER	Indicates compiler error in the case of a deferred feature not detected by earlier phase.
DELETE	Establishes DELETE code as REQUEST_CODE.
DYNMPL (NK)	Establishes a parameter list in workspace if one is not already established. Calculates workspace offset to particular slot requested. Establishes a symbolic working register. Establishes skeleton pseudo-code for LA, ST, and DROP of register into workspace offset.
ENDIO	Handles operations at end of I/O statement.
EVTOPT	Processes EVENT option. (Not implemented in second version.)
FILOPT	Processes FILE option.
IGNOPT	Processes IGNORE option.
INTFRM	Processes INTO/FROM option.
KEYOPT	Processes KEY or KEYFROM option.
LAONLY (NK)	Outputs pseudo-code for LA into symbolic work register of a dictionary reference without any offset modifiers.
LOCRDV (NK)	Entry point to CRDV routine which marks it as processing a based variable of a LOCATE statement.
KYTOPT	Processes KEYTO option.
LAOSM1 (NK)	Establishes pseudo-code for a LA instruction into a symbolic work register with the address of WORKSPACE and a literal offset which is pointed to the argument register.
LAOSM2 (NK)	Generates LA pseudo-code in which both base and offset are in registers.
MVPSCD (NK)	Puts pseudo-code assembled in pseudo-code area into output text block.
MVTRPL (NK)	Invokes SCAN utility to move generated triples into output text block.
NLKOPT	Indicates presence of NOLOCK option.

Table NJ1. Phase NJ Routine/Subroutine Directory (cont'd)

Routine/Subroutine	Function
NUSTAT	Handles operations at start of new statement.
NXTMPD	Invokes SCAN utility to get next triple, which is checked to see if it is a TMPD; if not, it is an error.
PNTRDR	Establishes the seven-byte pointer information slot in a BASED variable dictionary entry.
PRGEND	Releases control to next phase at end of program.
RCBCMN	Commons the dictionary entries of request code blocks.
READ	Establishes READ code as REQUEST_CODE; establishes parameter list size.
REFRDV (NK)	Establishes the address of the RDV dictionary entry in the ARG register when given the data variable dictionary address in INDX1.
REWRIT	Establishes REWRITE code as REQUEST_CODE.
SCALAR	Confirms that dictionary code byte refers to scalar item; ascertains whether item is a constant.
SCAN01	Indicates compiler error in the case of a deferred feature not detected during Read-In.
SCNOPT	Gets next triple of interest, branches to appropriate routine.
SCRHOP	Searches options, inserts RECORD-oriented I/O option entries into SCAN TRT interest table.
SELL (NK)	Generates SELL triples for all dictionary references in the SELL chain.
STDROP (NK)	Outputs pseudo-code to ST contents of symbolic work register into parameter list slot in workspace set up by DYNMPL, and the drop of the symbolic register.
STRTNJ	Initializes phase.
SYMREG (NK)	Establishes symbolic work register.
TMPREF (NK)	Generates the appropriate LA pseudo-code to load the address of the temporary described by TMPD.
TMPSEL (NK)	Adds temporary entry to SELL chain for generation of SELL triple upon completion.
TXTARG	Processes second argument of triple. If dictionary reference, establishes absolute address in INDX1. Returns to LR if zero, i.e., TEMP, LR+4 if dictionary reference. If null, indicates compiler error.
TXTERR	Writes error message.
TXTEST	Converts function code of triple interest TRT table to internal key, and invokes PRGEND if end of program is indicated.
UNLOCK	Establishes UNLOCK code as REQUEST_CODE. (Not implemented in second version.)
WRITE	Establishes WRITE code as REQUEST_CODE.
WRKSPC (NK)	Establishes the requested workspace area, starting on fullword boundary.

• Table NM. Phase NM Pseudo-Code Executable I/O

Statement or Operation Type	Main Processing Routine	Subroutines Used
Processes GET and PUT statements	GET	INSERT, STORAD, INSTFL, GENPC, GENTR, MVTRSP, ENDLST, CALIB, CHAR, INTEG, UTTMPW, SRCERR, SCAN (KT), STRUT1 (LV), STRUT2 (LV)
Processes OPEN and CLOSE statements	OPEN	INSERT, STORAD, INSTFL, GENPC GENTR, MVTRSP, ENDLST, CALIB, CHAR, INTEG, UTTMPW, SRCERR, SCAN (KT), STRUT1 (LV), STRUT2 (LV)

Table NM1. Phase NM Routine/Subroutine Directory

Routine/Subroutine	Function
CALIB (NN)	Generates part of calling sequence and makes dictionary entry for Library routine.
CHAR (NN)	Converts a given argument to character string.
ENDLST (NN)	Completes parameter list and makes dictionary entry for it.
GENPC (NN)	Moves pseudo-code to output.
GENTR (NN)	Moves generated triples to output.
GET	Processes GET and PUT statements.
GET00	Initializes switches for GET/PUT.
GET20	PAGE option.
GET85	Processes end of I/O statement.
INSERT (NN)	Inserts dictionary reference in parameter list.
INSTFL (NN)	Inserts file reference in parameter list.
INTEG (NN)	Converts a given argument to integer.
MVTRSP (NN)	Moves data and format list triples to output.
NMR1	Begins scan for triples of interest.
OPEN	Processes OPEN and CLOSE statements.
OPEN00	Initializes switches for OPEN/CLOSE.
SRCERR (NN)	Makes error dictionary entry.
STORAD (NN)	Generates pseudo-code to store symbolic register in parameter list.
UTTMPW (NN)	Obtains temporary workspace.

• Table NT. Phase NT Pseudo-Code Data and Format

Statement or Operation Type	Main Processing Routine	Subroutines Used
Initializes phase, obtains scratch storage	NT0000	None
Scans text	NT0003	NT0011, NT0014, NT0017, NT0021, NT0023, NT0024, SC2 (KT)
Collects remote format items and saves until end of block	NT0011	None
Associates remote format items with data list items	NT0014	NTUT10
Makes entries for Library routines required for EDIT-directed I/O and copies skeletons for phase NU into scratch storage, then releases phase	NT0017	NTUT20
Identifies type of data list item and enters the type code in a list	NT0021	None
Associates format and data list items and marks INCLUDE matrix	NT0023	NTUT10
Identifies type of format list item and enters the type code in a list	NT0024	None
Sets bits in INCLUDE matrix to represent STREAM I/O conversion requirements at execution time	NTUT10	None
Makes dictionary entry for Library Routine	NTUT20	None

Table NT1. Phase NT Routine/Subroutine Directory

Routine/Subroutine	Function
NT0000	Initializes phase, obtains scratch storage.
NT0001	Initializes phase address slots.
NT0003	Scans text.
NT0011	Collects remote format items.
NT0014	Associates remote format items with data list items.
NT0017	Makes entries for Library routines for EDIT-directed I/O.
NT0021	Identifies types of data list items.
NT0023	Associates format and data list items.
NT0024	Identifies types of format list items.
NT1700	No EDIT-directed I/O, therefore no scan pass.
NTUT10	Sets bits in INCLUDE matrix.
NTUT20	Makes dictionary entry for Library routine

• Table NU. Phase NU Pseudo-Code Data and Format Lists

Statement or Operation Type	Main Processing Routine	Subroutines Used
Generate Library calling sequences for data items in DATA-directed I/O statements	NU0022	INSERT,UT24,UT11,UT23
Generate Library calling sequences for data items in LIST-directed I/O statements	NU0023	INSERT,UT11,UT25,UT14,UT23,UT09
Generate code for data items in EDIT-directed I/O statements	NU0024	UT09,14
Scan text	NU0002	SC1(KT), SC2(KT), SC3(KT)
Generate Library calling sequences for format list items	NU0029,NU0030 NU0033,NU0037, NU0050	UT15,UT18,BCDCNV,UT10

Table NU1. Phase NU Routine/Subroutine Directory

Routine/Subroutine	Function
BCDCNV (NV)	Convert decimal constant to binary.
INSERT	Add an entry to an argument list.
NU0002 (NV)	Scan text.
NU0022	Generate Library calling sequence for DATA-directed data list item.
NU0023	Generate Library calling sequence for LIST-directed data list item.
NU0024 (NV)	Generate cards for EDIT-directed data list item.
NU0029 (NV)	Generate Library call for A or B format item.
NU0030 (NV)	Generate Library call for E or F format item.
NU0033 (NV)	Generate code for R format item.
NU0037 (NV)	Generate Library call for P format item.
NU0050 (NV)	Generate Library call for X, PAGE, SKIP, LINE, C, or COLUMN format item.
UT09	Make dictionary entry for constant in EDIT or LIST list.
UT10	Convert a constant entry to one of specified type.
UT11	Generate Library calling sequence passing argument list.
UT14	Generate code for intermediate result items in EDIT and LIST data lists.
UT15	Make dictionary entry for FED or DED.
UT18 (NV)	Generate an assignment triple.
UT23	Generate Library call code.
UT24	Construct symbol table dictionary entry.
UT25	Set bit in the INCLUDE matrix.

• Table OB. Phase OB Pseudo-Code Compiler Functions

Statement or Operation Type	Main Processing Routine	Subroutines Used
Scans text for BUY, BUY ASSIGN statements and compiler function and compiler pseudo-variables (see Appendix D.8), and transfers to appropriate routine	ST1	SCAN (KT)
Replaces MTF compiler functions (Appendix D.8) by pseudo-code move character instructions, adjusting the target field to controlled or temporary type 2 workspace where necessary	MTFR	BUFIZE, FRSTOP, SC3 (KT)
Replaces ADV compiler functions (Appendix D.8) by pseudo-code instructions to load specified element of a dope vector into a register	ADVR	SC3 (KT)
Replaces SDV compiler functions (Appendix D.8) by instructions to load the maximum length from a string dope vector into a register	SDVR	SC3 (KT)
Replaces compiler pseudo-variable triples and compiler assignment triples by pseudo-code instructions which store the value assigned in specified part of dope vector	ST4	BUFIZE, STACK, MV3A (KT), FRSTOP, DROPRG, USTACK, SC5 (KT)
Remove BUY, BUY ASSIGN, and SELL statements for scalar non-adjustable temporary variables from the text, and allocate storage in the pseudo-code workspace for the temporaries	ST8, ST10, ST7	SC2, SC3 (both in KT)
Generates code to drop a symbolic register, or mark a literal register not wanted	DROPRG	None

• Table OB. Phase OB Pseudo-Code Compiler Functions (continued)

Statement or Operation Type	Main Processing Routine	Subroutines Used
Determines whether the target dictionary reference of MTF function, or ADV or SDV pseudo-variable is controlled or a temporary type 2. If it is, the dictionary reference is replaced by the dictionary reference of the controlled or temporary type 2 workspace, with the appropriate offset, if the target is a structure base element	FRSTOP	SETDVF
Stack and unstack the information specifying the target field of compiler pseudo-variable assignment	STACK, USTACK	None
Calculates the offset of the dope vector of a structure base element from the start of the structure dope vector	SETDVF	None
Place triples from the source text in an internal buffer.	BUFIZE	SC5 (KT)

Table OB1. Phase OB Routine/Subroutine Directory

Routine/Subroutine	Function
ADVR	Replaces ADV compiler functions by pseudo-code instructions to load the specified element of a dope vector into a register.
AT7	Generates pseudo-code.
AT8	Replaces operand by workspace reference.
BUFIZE	Places triples from the source text in an internal buffer.
BY5	Tests length of string.
BY19	Processes string temporary (dope vector only).
DROPRG	Generates code to drop a symbolic register or mark a literal register not wanted.
FRSTOP	Replaces the target field of MTF function or compiler pseudo-variable by controlled workspace where necessary.
MTFR	Replaces MTF compiler functions by pseudo-code move character instructions.
SDVR	Replaces SDV compiler functions by pseudo-code instructions to load the maximum string length into an object register.
SETDVF	Calculates the offset from the start of a structure dope vector to the dope vector of a particular base element.
STACK/USTACK	Stack and unstack information specifying target field of compiler pseudo-variable assignment.
ST1	Scans text for BUY and BUY ASSIGN statements, compiler functions, and compiler pseudo-variables.
ST4, ST6	Replaces compiler pseudo-variables and compiler assignment triples by pseudo code instructions to set the assigned expression, converted if necessary in the specified part of a dope vector.
ST7,ST8,ST10	Remove BUY, BUY ASSIGN, and SELL statements for fixed scalars from the text, and allocate space for the temporary variables in the pseudo-code workspace.

Table OD. Phase OD Pseudo-Code Assignment

Statement or Operation Type	Main Processing Routine	Subroutines Used
Get block of scratch core	SCRCOR	None
Move routines, constants and tables to block	MOVTAB	None

Table OD1. Phase OD Routine/Subroutine Directory

Routine/Subroutine	Function
SCRCOR	Obtains block of scratch core.
MOVTAB	Moves routines, tables and constants into scratch core.

Table OE. Phase OE Pseudo-Code Assignment

Statement or Operation Type	Main Processing Routine	Subroutines Used
Generates pseudo-code for assignment triples	ASS00	ASC00, ASCD00, ASDROP
Generates Library calling sequences for ALLOCATE, FREE, BUY, and SELL triples	ALLOC, FREE, BUY, or SELL	CALIB

Table OE1. Phase OE Routine/Subroutine Directory

Routine/Subroutine	Function
ALLOC (OF)	Processes ALLOCATE triples.
ASC00	Inserts target types for constants.
ASCD00	Controls assignment of real and complex data.
ASDROP	Drops symbolic registers.
ASFB00	Generates code for fixed binary assignments.
ASFD00 (OF)	Generates code for fixed decimal assignments.
ASFL00	Generates code for floating-point assignments.
ASL00	Generates code for label assignments.
ASPO00	Generates code for pointer/offset assignment.
ASAR00	Generates library calling sequence for area assignment.
ASS00	Processes assignment triples.
ASS032	Tests for special assignment triple.
ASTR00 (OF)	Generates code for string and numeric field assignments.
BUY (OF)	Processes BUY triples.
CALIB (OF)	Generates Library calling sequences.
ENABLE	Enables for SIZE prefix option.
FREE (OF)	Processes FREE triples.
GENCNV	Generates convert macro instruction.
GENRX0	Generates RX instruction.
GENSS0	Generates SS instruction.
GETDES	Obtains operand description.
RMNDX	Removes index from operand.
SBGTNR	Obtains next symbolic register.
SELL (OF)	Processes SELL triples.
SPASS (OF)	Processes special assignment triples.

• Table OG. Phase OG Library Calling Sequences

Statement or Operation Type	Main Processing Routine	Subroutines Used
Scans triples and takes action on their values	TRSCAN	EOBIN,TSCSNO,TSCCLB,TSCPRC,FMT001, TSCEOP,TSCEP2,JSCJMP,MOVITM,MOVOUT
Scans pseudo-code deleting IGNORE items and detecting CONVERT items	PCSCAN	CNVFND,MOVITM,MOVOUT
Examines fields of CONVERT, and determines whether the conversion is to be done in-line	IEMOH	MJG201,IEMOI,CODCAL
Generates Library calling sequence	MJG201	MJG203,MJG204,MJG298
Generates in-line code for selected conversions	IEMOI	BITODI,FDTOFB,FIBFLT,DECFLT,PICHAR
Generates in-line code for pictures containing not more than four of the insertion characters (/ , . blank), if the target field is fixed decimal, fixed binary, float decimal or float binary	IEMOL	SILCON, MOVOUT

● Table OG1. Phase OG Routine/Subroutine Directory

Routine/Subroutine	Function
EOBIN	Entered when an end of input block marker is detected.
TSCSNO	Processes SN, SN2, and SL triples.
TSCCLB	Processes CL triples.
TSCPRC	Processes PROC, PROC¹, BEGIN, and BEGIN¹ triples, and sets up counts for work space requirements.
FMT001	Handles the workspace requirements for FORMAT and FORMAT LIST.
TSCEOP	Processes EOP triple.
TSCEP2	Processes EOP2 triples and terminates phase.
TSCJMP	When a JUMP triple is found the routine sets up a counting mechanism and enters PCSCAN.
MOVITM	Moves from input an item which spans blocks.
MOVOUT	Moves an item to the output block.
CNVFND	When a CONVERT is found passes control to IEMOH and outputs pseudo-code generated on return.
MJG201 (OH)	Generates pseudo-code to call the Library conversion package.
CODCAL (OH)	Given a DED generates a code byte used by the in-line conversions.
MJG203 (OH)	Generates pseudo-code to point registers at data.
MJG204 (OH)	Generates pseudo-code to call Library conversion module.
MJG298 (OH)	Sets bits in include card matrix.
BITODI (OI)	Generates in-line code for binary to decimal conversion.
FDTOFB (OI)	Generates in-line code for decimal to binary conversion.
DECFLT (OI)	Generates in-line code for decimal to float conversion.
FIBFLT (OI)	Generates in-line code for fixed binary to float conversion.
PICHAR (OI)	Generates in-line code for picture to character string conversion.
SILCON (OL)	Generates in-line code for pictures containing not more than four of the insertion characters (/ , . blank), if the target field is fixed decimal, fixed binary, float decimal or float binary conversion.

Table OM. Phase OM In-line Data Conversions

Statement or Operation Type	Main Processing Routine	Subroutines Used
Scans text for CNVC macros	TEXTSC	None
Passes control to code generation routines	CNVCDE	PACK,UNPACK,EDIT,EDMK

Table OM1. Phase OM Routine/Subroutine Directory

Routine/Subroutine	Function
CNVCDE	Passes control to the in-line code generation routines.
EDIT	Generates conversion code, based on the ED instruction, for FIXED DEC to PICTURE conversion which includes punctuation and/or zero suppression.
EDMK	Generates conversion code, based on the EDMK instruction, for FIXED DEC to PICTURE conversion which includes a drifting sign.
PACK (ON)	Generates conversion code, based on the PACK instruction, for PICTURE to FIXED DEC conversion when the picture contains only 9's and V, and has only external sign or edit characters.
PTNGEN	Generates the editing constant or mask used by the ED or EDMK in-line instructions.
TEXTSC	Scans text for CNVC macros.
UNPACK (ON)	Generates conversion code, based on the UNPK instruction, for FIXED DEC to PICTURE containing only 9's and V, and with only external sign or edit characters.

Table OP. Phase OP Further In-line Conversions

Statement or Operation Type	Main Processing Routine	Subroutines Used
Initialize and perform test scan to search for convert macros	TEXTSC	CNVCDE
Examine convert macro and select routine to generate in-line code	CNVCDE	BNTOBT, BTTOBN, FLTOBN

Table OP1. Phase OP Routine/Subroutine Directory

Routine/Subroutine	Function
BNTOBT	Generate in-line code for conversion from fixed binary to bit string
BTTOBN	Generate in-line code for conversion from bit string to fixed binary
FLTOBN	Generate in-line code for conversion from float binary to fixed binary

Table OS. Phase OS Constant Conversions

Statement or Operation Type	Main Processing Routine	Subroutines Used
Scans constants chain for double word constants	SCAN1	POOLSC, SCN010, STPTST
Scans constants chain for single word constants	SCAN2	POOLSC, SCN010, STPTST
Scans constants chain for unaligned constants	SCAN3	CONVRT, IADENT, SCN010, STPTST
Scans through constants chain for all constants used to initialize STATIC storage	SCAN4	CONVRT, STPTST
Sets up parameter and branches to the correct conversion routine	CONVRT	ARARD, ARBTD, ARCHD, CHARD, ERROUT, IACONV, IASTRN, IHEVFA, IHEVFB, IHEVFC, IHEVFD, IHEVFE, IHEVKF, IHEVKG, IHEVPA, IHEVPB, IHEVPC, IHEVPD, IHEVPE, IHEVPF, IHEVPG, IHEVPH, UPAA, UPAB, UPBA, UPBB, VSAA, VSCA, VSDA, VSEA, ZEROPT

Table OS1. Phase OS Routine/Subroutine Directory

Routine/Subroutine	Function
ARARD	Handles the linking of routines required for any arithmetic to arithmetic conversions (corresponding Library module IHEDMA).
ARBTD	As above for arithmetic to bit conversion (corresponding Library routines IHEDNB).
ARCHD	Arithmetic to character (IHEDNC).
CHARD	Character to arithmetic (IHEDCN).
CONVRT	Sets up parameters and branches to correct conversion routine.
ERROUT	Handles the output of error messages for the conversion routines.
IACONV	Handles conversion to arithmetic type.
IADENT	Makes dictionary entry in the constant pool, generating a new constant pool block if necessary.
IASTRN	Handles conversion to string type.
IHEVFA (OT)	Converts radix long floating-point binary to packed decimal intermediate.
IHEVFB (OT)	Converts long precision floating-point number to fixed binary.
IHEVFC (OT)	Converts long floating-point number to floating-point variable.
IHEVFD (OT)	Converts fixed point binary integer with scale factor to long precision floating-point intermediate.
IHEVFE (OT)	Converts floating-point number of specified precision floating-point.

Table OS1. Phase OS Routine/Subroutine Directory (cont'd)

Routine/Subroutine	Function
IHEVKF (OU)	Converts packed decimal intermediate to decimal fixed or floating-point numeric field with specified precision.
IHEVKG (OU)	Converts packed decimal intermediate to a sterling numeric field, with specified precision.
IHEVPA (OT)	Converts packed decimal intermediate to long float.
IHEVPB (OU)	Converts packed decimal intermediate to an F format item.
IHEVPC (OU)	Converts packed decimal intermediate to an E format item.
IHEVPD (OT)	Converts packed decimal intermediate to a decimal integer with specified precision and scale factor.
IHEVPE (OT)	Converts an F or E format item to packed decimal intermediate.
IHEVPF (OT)	Converts a decimal integer with specified precision and scale factor to packed decimal intermediate.
IHEVPG (OT)	Converts binary fixed or floating-point constant to long precision floating-point.
IHEVPH (OT)	Converts bit string constant with up to 31 significant bits, to floating-point with long precision.
LDCONP	Points to head of constant chain.
POOLSC	Given a converted constant in scratch storage, scans the existing pool for an identical entry. If such an entry is found, the pool offset and dictionary reference of the entry is moved into the dictionary entry for the constant.
SCAN1	Scans constants chain for double word constants.
SCAN2	Scans constants chain for single word constants.
SCAN3	Scans constants chain for unaligned constants.
SCAN4	Scans constants chain for constants used to initialize static storage.
SCN010	Controls the calling of the conversion routine CONVRT and pool scan routine POOLSC and, if required, IADENT. Also handles the case of a constant given in internal form.
STPTST	Checks for the end of the constant chain.
UPAA (UPAB) (OT)	Produces zero real (imaginary) part for CAD (corresponding Library module IHEUPA).
UPBA (UPBB) (OT)	Produces zero real (imaginary) part for numeric field (IHEUPB).
VSAA (OT)	Convert from bit string to bit string (IHEVSA).
VSCA (OT)	Convert from character string to character string (IHEVSC).
VSDA (OT)	Convert from character string to bit string (IHEVSD).
VSEA (OT)	Convert from character string to pictured character string (IHEVSE).
ZEROPT	Produces a zero real or imaginary part for a constant given in internal form.

• Chart 09. Storage Allocation Logical Phase Flowchart

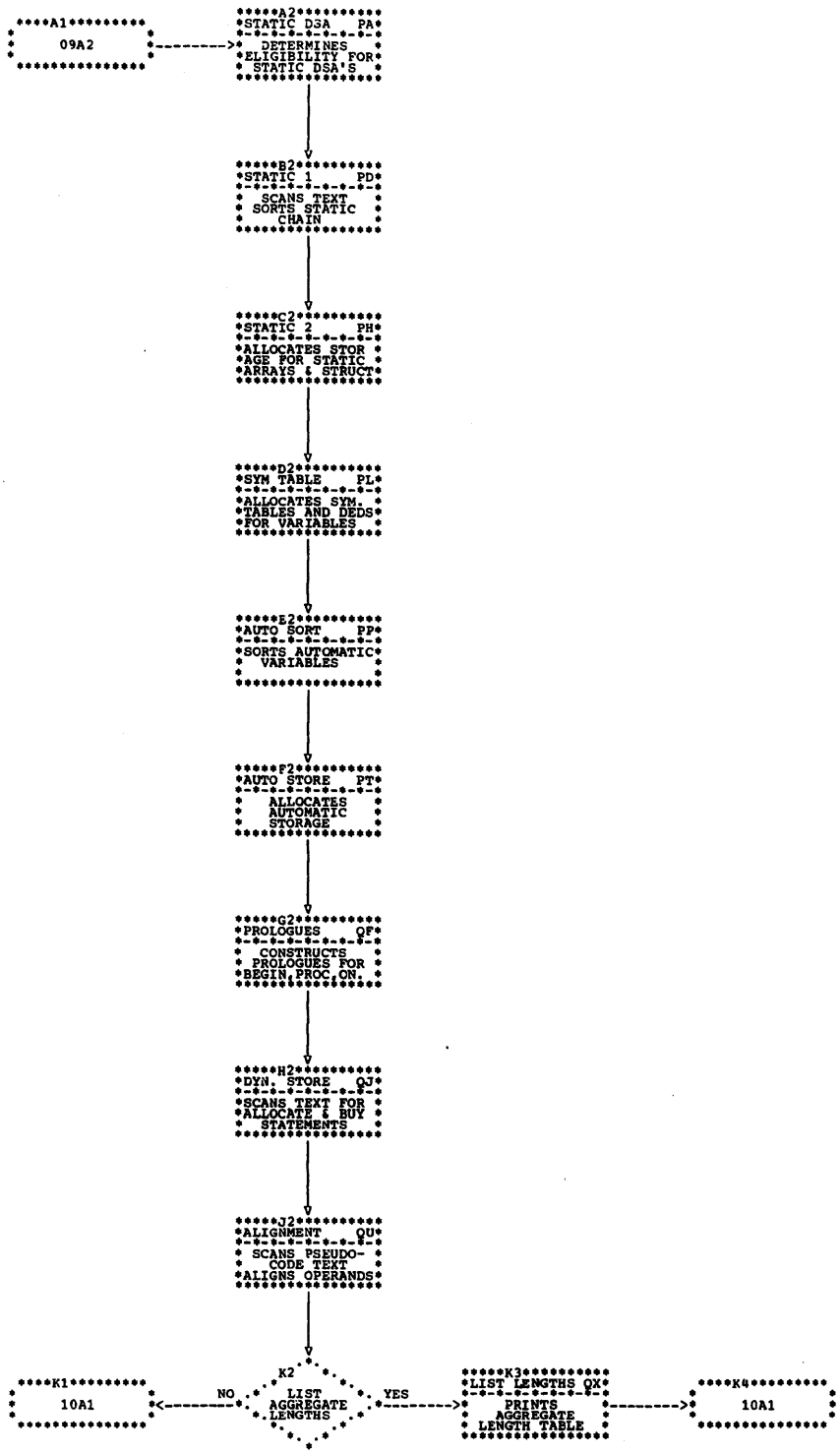

Chart PA. Phase PA Overall Logic Diagram

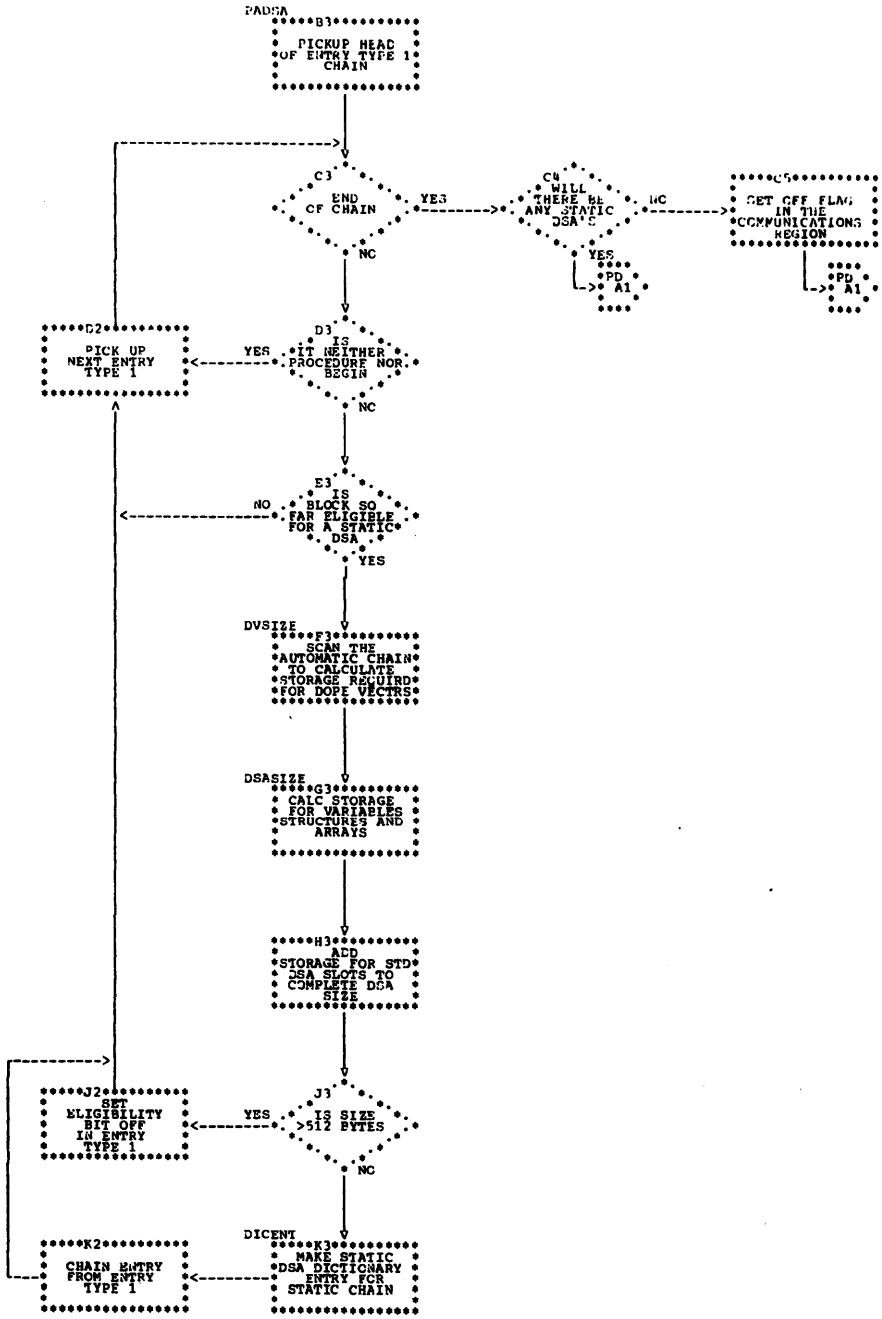

Chart PD. Phase PD Overall Logic Diagram

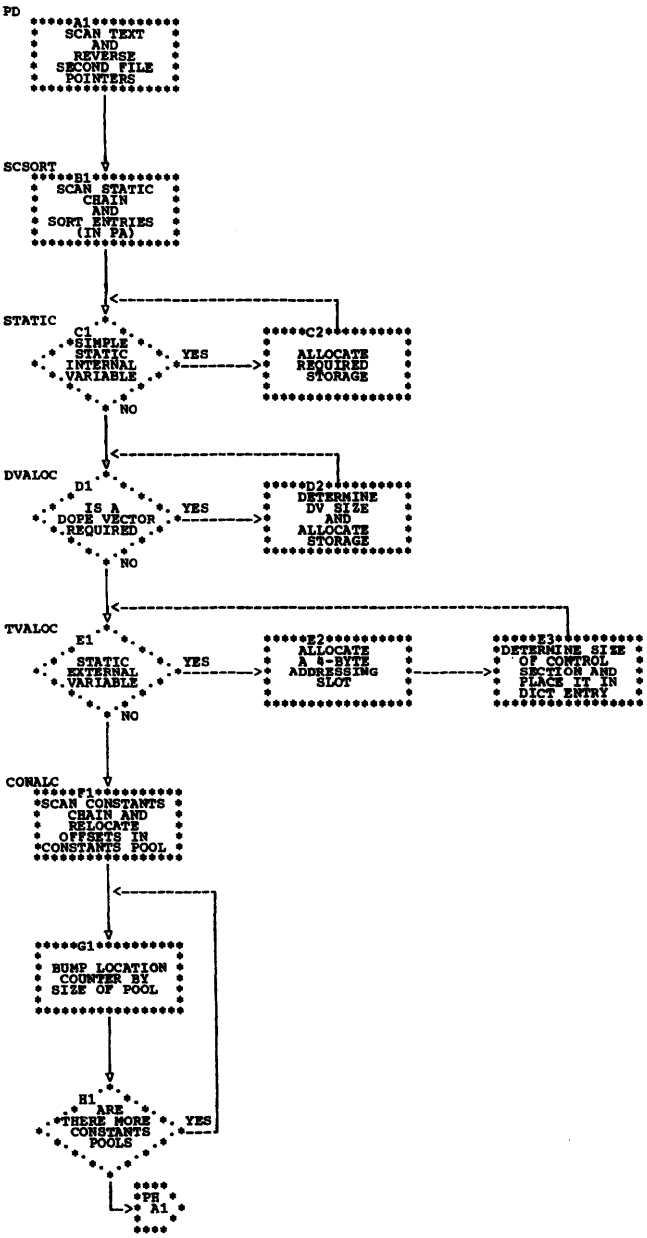

Chart PH. Phase PH Overall Logic Diagram

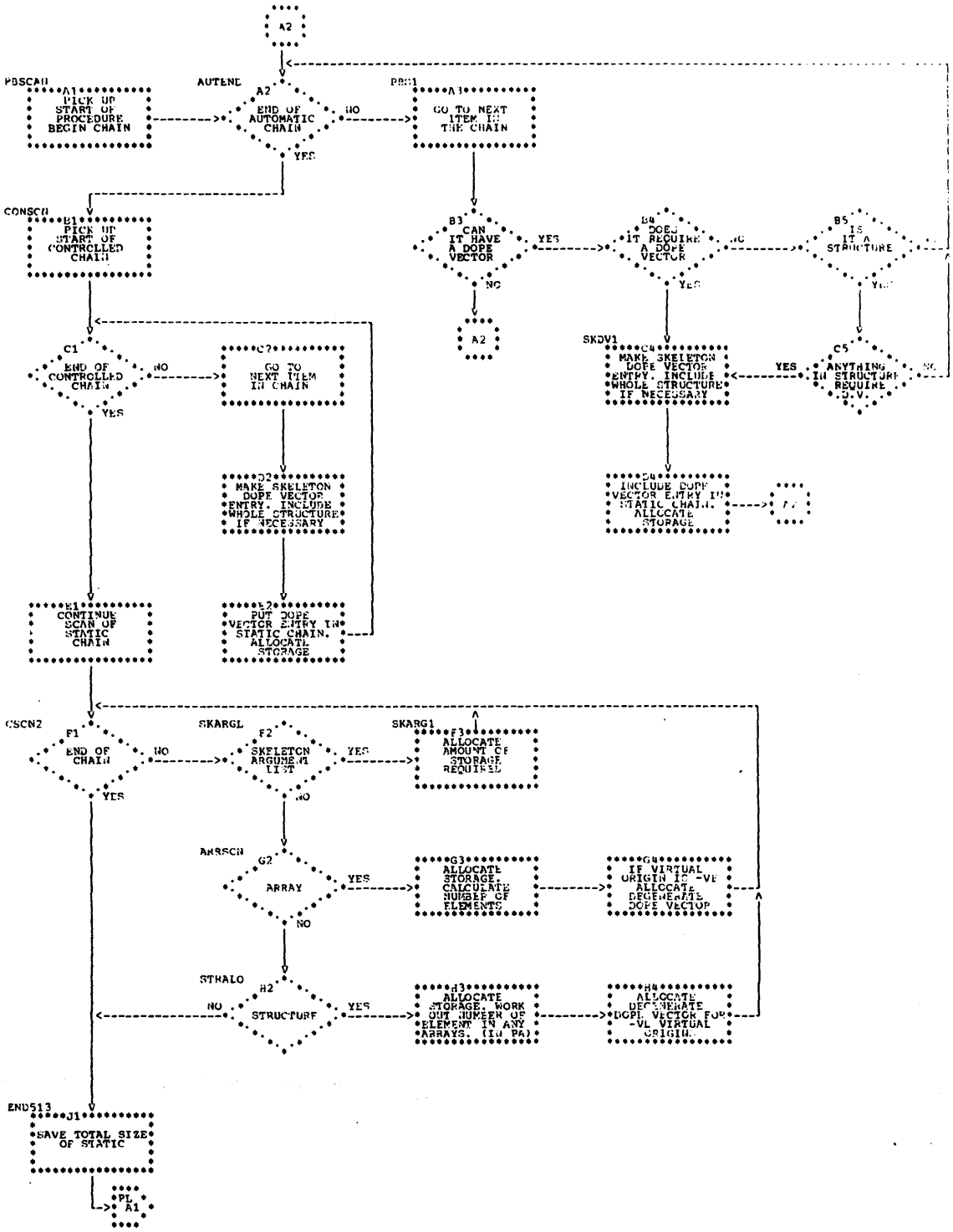

Chart PL. Phase PL Overall Logic Diagram

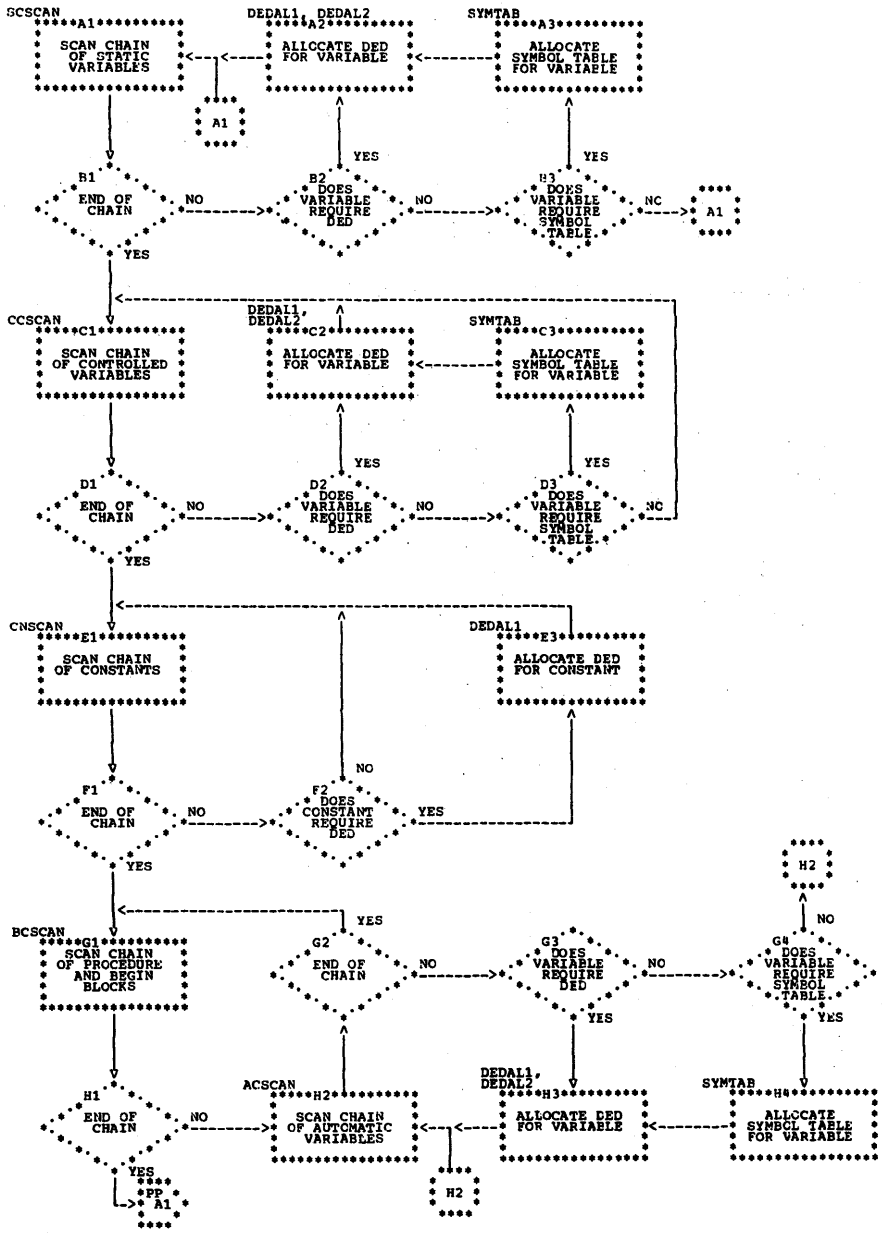

Chart PP. Phase PP Overall Logic Diagram

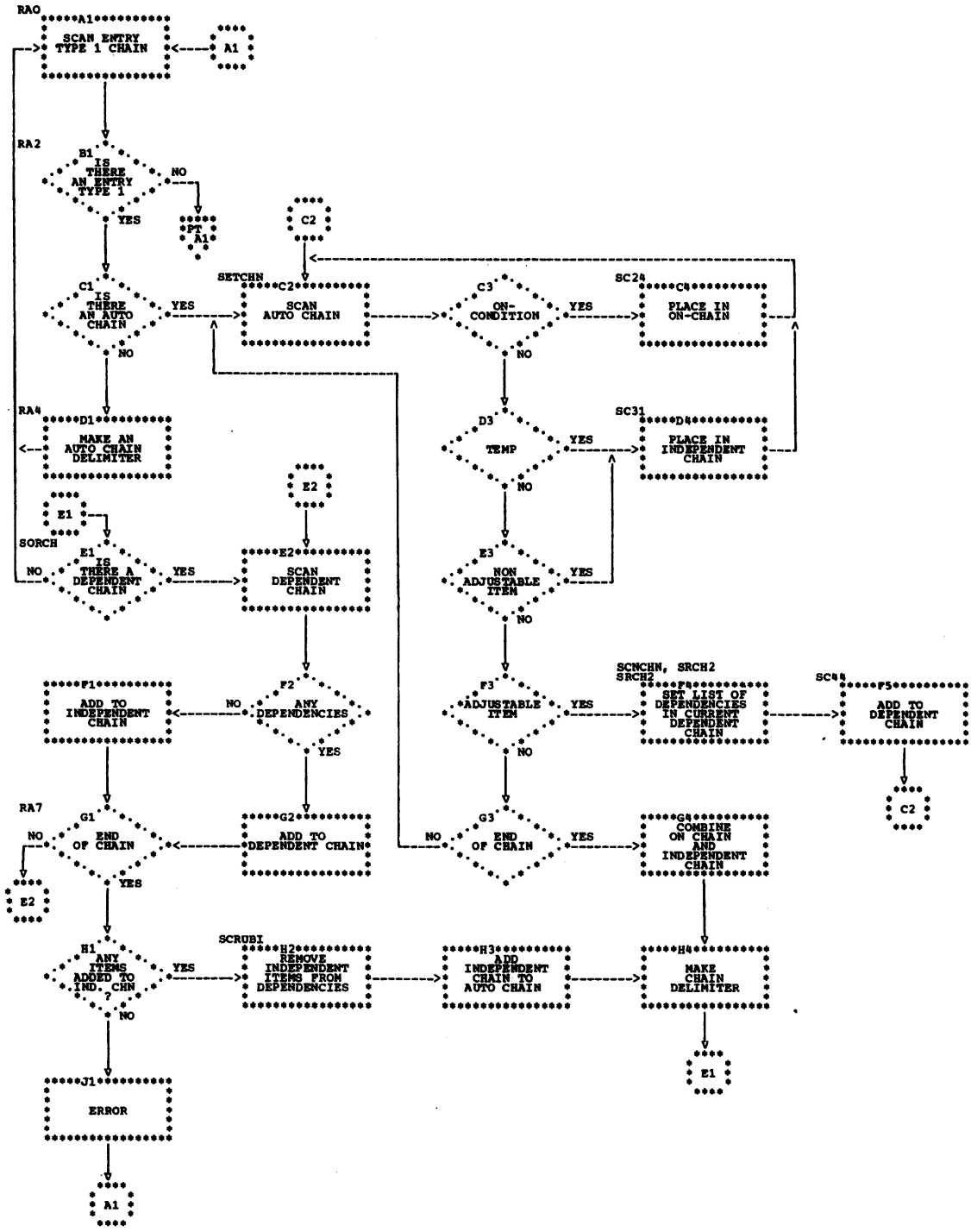

Chart PT. Phase PT Overall Logic Diagram

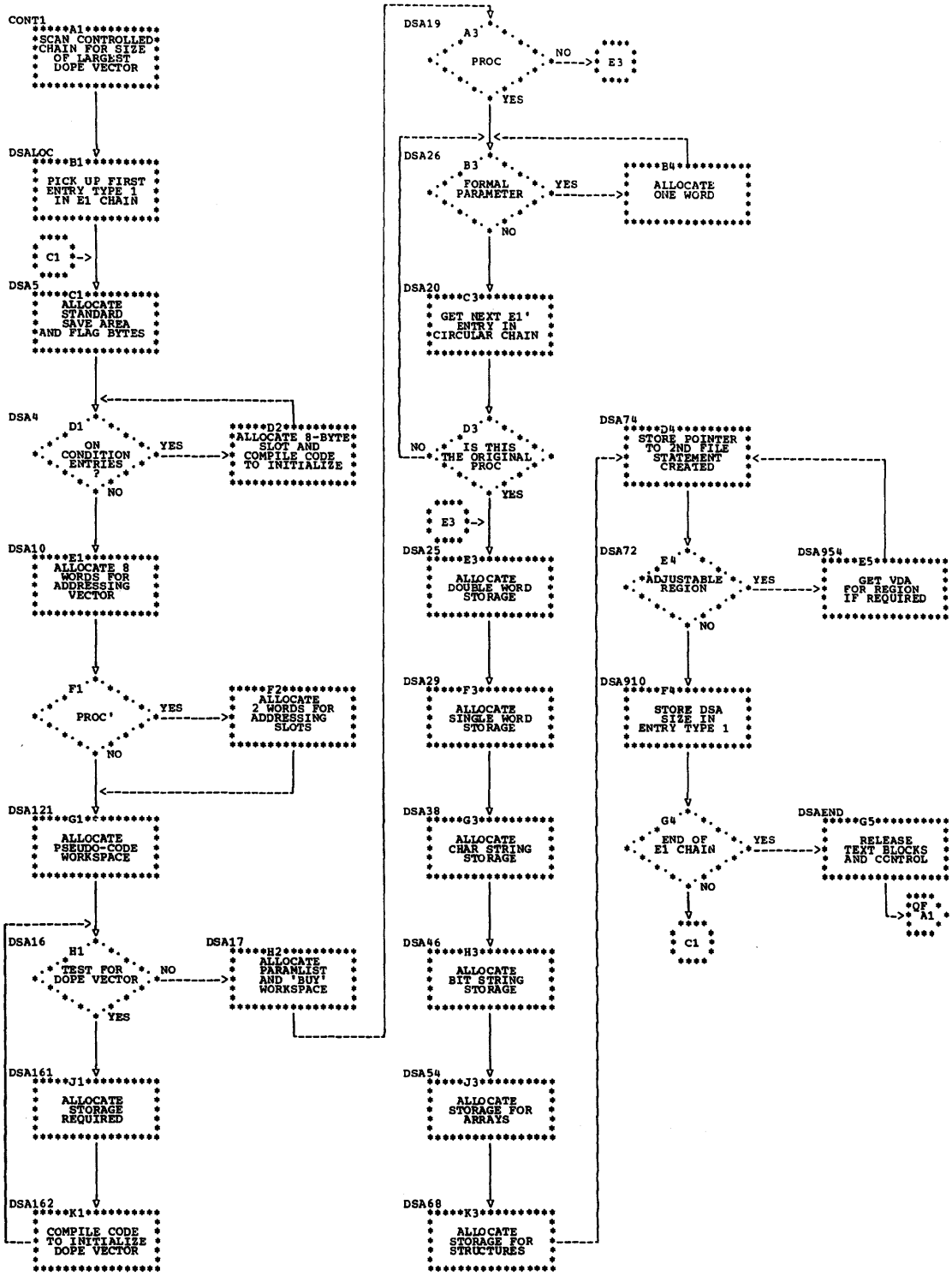

Chart QF. Phase QF Overall Logic Diagram

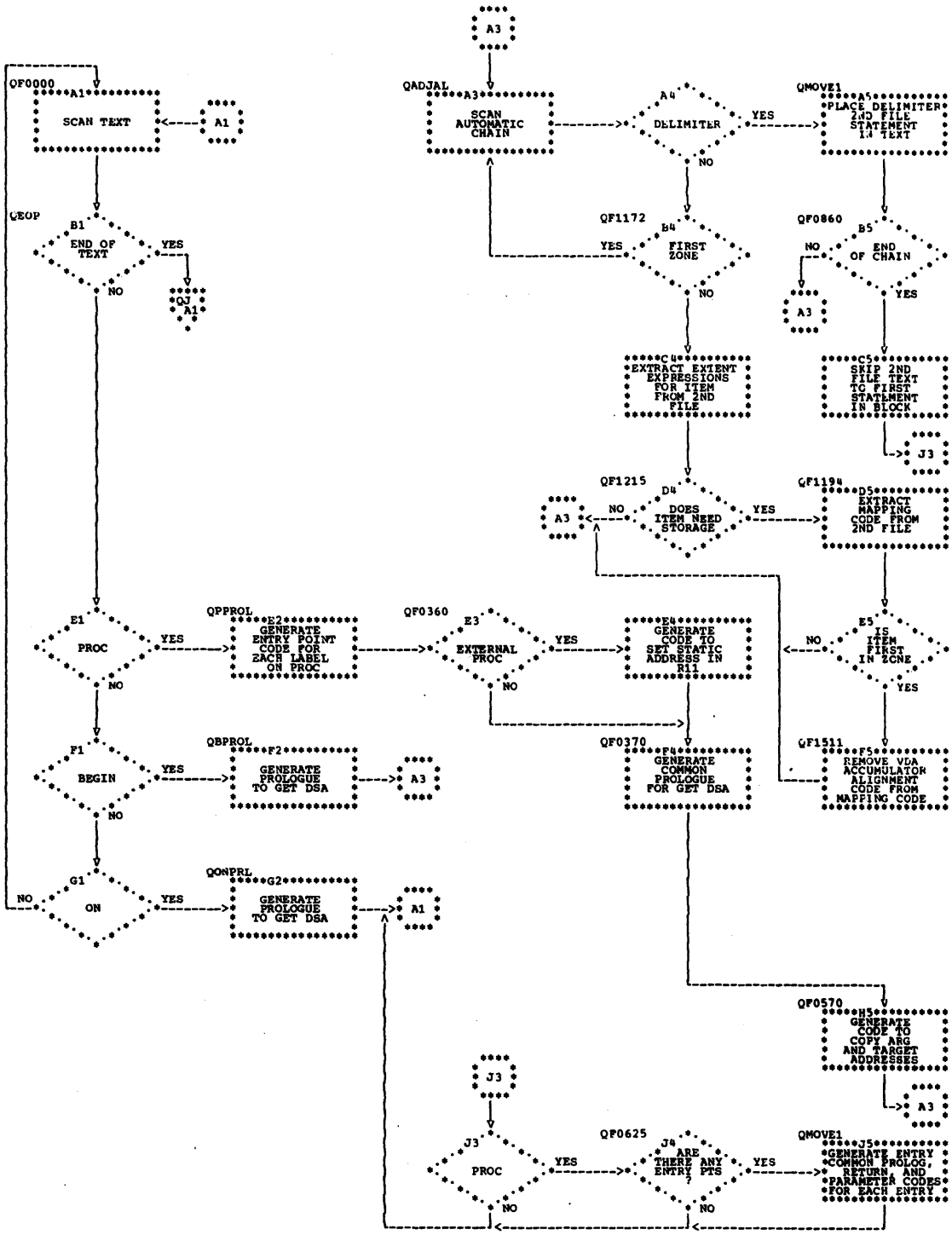

Chart QJ. Phase QJ Overall Logic Diagram

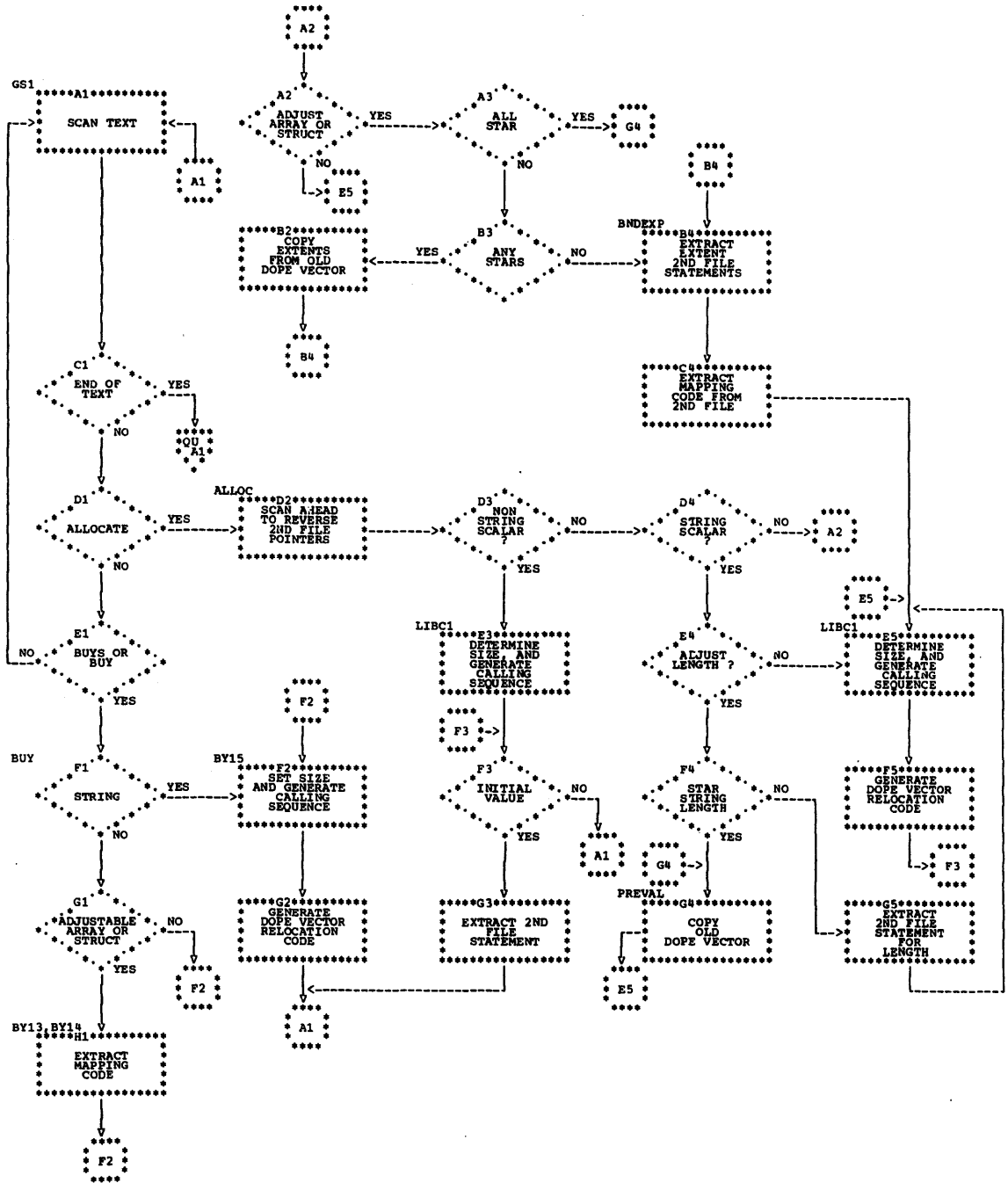

Chart QU. Phase QU Overall Logic Diagram

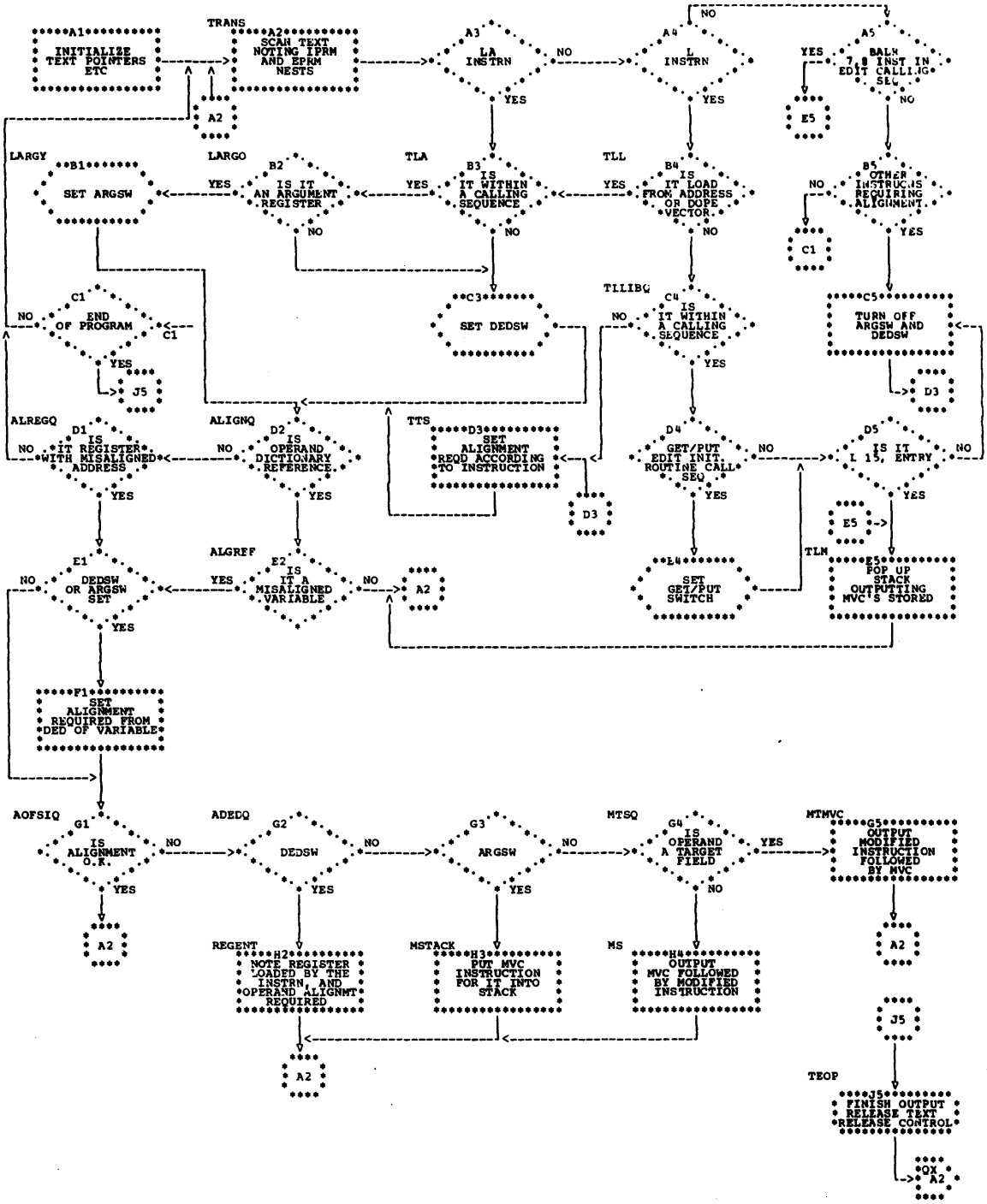

Chart QX. Phase QX Overall Logic Diagram

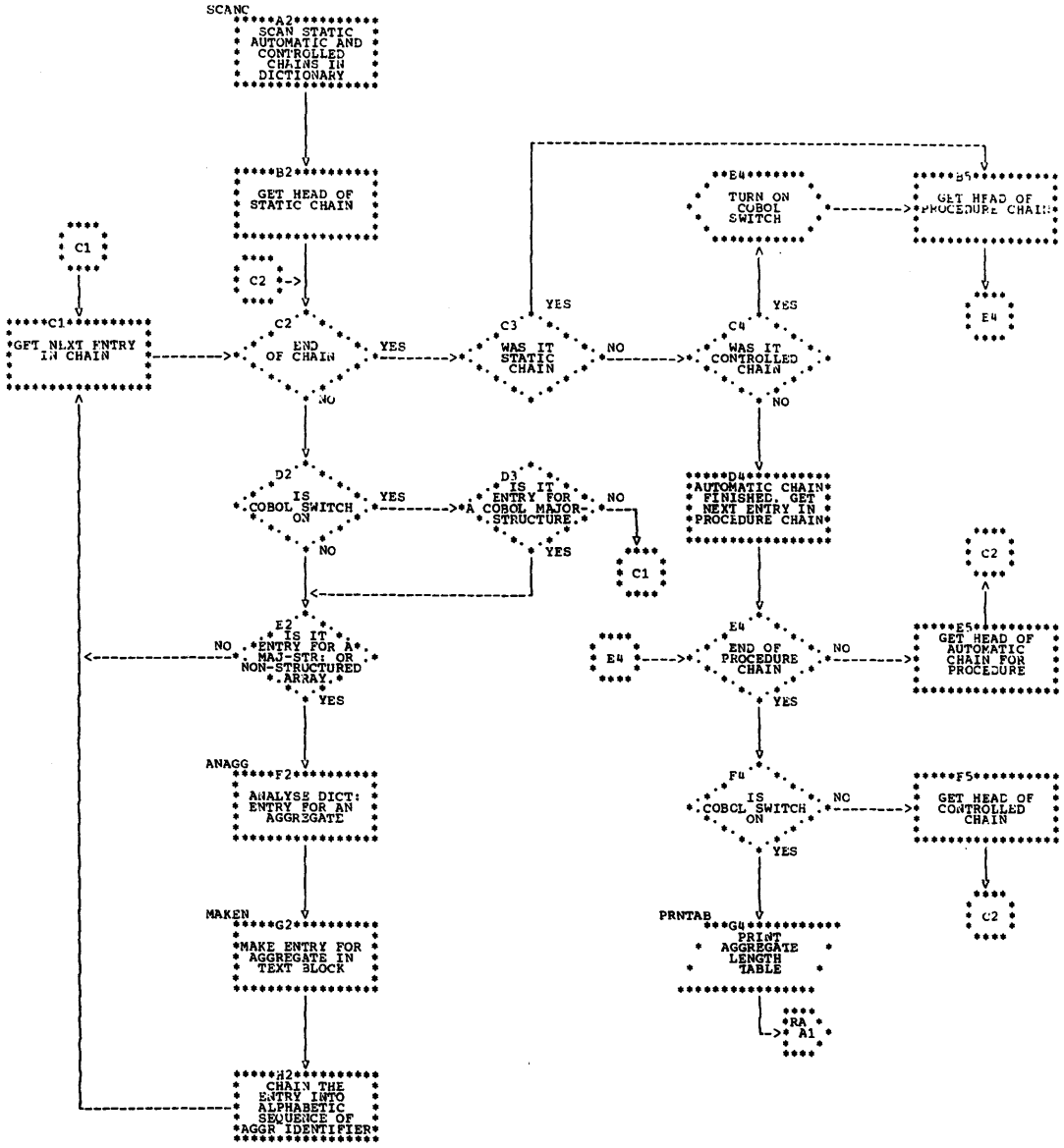

Table PA. Phase PA DSAs in STATIC Storage

Statement or Operation Type	Main Processing Routine	Subroutines Used
Scans Entry Type 1 chain for blocks eligible for STATIC DSAs	PADSA	DSASIZ,DVSIZE
Makes a dictionary entry for each STATIC DSA	DICENT	None
Sorts STATIC chain (called from PD)	SCSORT	None
Scans STATIC chain for INTERNAL arrays; calculates number of elements for those arrays needing initialization. Allocates storage for arrays and, if necessary, for secondary dope vectors	ARRSCN	None

Table PA1. Phase PA Routine/Subroutine Directory

Routine/Subroutine	Function
ARRSCN	Scans STATIC chain for INTERNAL arrays; allocates storage for arrays and secondary dope vectors (called from PH).
DICENT	Makes a dictionary entry for each STATIC DSA.
DSASIZ	Calculates size of DSA excluding Register Allocator Workspace.
DVSIZE	Scans AUTOMATIC chain for variables requiring dope vectors, and calculates size of dope vectors.
PADSA	Determines eligibility of a block for a STATIC DSA.
SCSORT	Sorts STATIC chain (called from PD).

Table PD. Phase PD Storage Allocation Static 1

Statement or Operation Type	Main Processing Routine	Subroutines Used
Reverses second file dictionary pointers	PD	NXBLCK
Sorts STATIC chain	SCSORT (in PA)	None
Allocates storage for simple, non-structured, non-external items	STATIC	SDSA1
Allocates dope vectors for all non-external items	DVALOC	None
Allocates 4-byte addressing slots; calculates control section size for all external items	TVALOC	STRCDV
Allocates storage for constants.	CONALC	None

Table PD1. Phase PD Routine/Subroutine Directory

Routine/Subroutine	Function
CONALC	Allocates storage for constants.
DVALOC	Allocates dope vectors for all non-external items.
NXBLCK	Obtains next text block.
PD	Scans text file and reverses second file pointers.
SDSA1	Allocates a 4-byte address slot for each STATIC DSA.
SCSORT	Sorts STATIC chain.
STATIC	Allocates storage for simple, non-structured, non-external items.
STRCDV	Allocates relative offsets of structure member dope vectors.
TVALOC	Allocates 4-byte addressing slots; calculates control section size for all external items.

Table PH. Phase PH Storage Allocation Static 2

Statement or Operation Type	Main Processing Routine	Subroutines Used
Scans AUTOMATIC chain; allocates dope vector	PBSCAN	AUTO4, SKDV1, SKENT3, STRSCN, TEMPDV
Scans CONTROLLED chain	CONSCN	AUTO4, SKDV1, STRSCN
Allocates storage for skeleton argument lists appearing in STATIC chain	SKARGL	None
Scans STATIC chain for INTERNAL arrays; calculates number of elements for those arrays needing initializing. Allocates storage for arrays and, if necessary, for secondary dope vectors	ARRSCN (in PA)	None
Scans STATIC chain for INTERNAL structures. Calculates number of elements in structured arrays needing initializing. Calculates size of storage for all structures and bumps location counter.	STRALO	None

Table PH1. Phase PH Routine/Subroutine Directory

Routine/Subroutine	Function
ARRSCN (in PA)	Scans STATIC chain for INTERNAL arrays; allocates storage for arrays and secondary dope vectors.
AUTEND	Tests for end of AUTOMATIC chain.
AUTO4	Calculates size of dope vectors for dynamic temporaries and CONTROLLED variables.
CONSCN	Scans CONTROLLED chain.
CSCN2	Tests for end of STATIC chain.
END513	Stores STATIC location counter and releases control.
PBSCAN	Scans AUTOMATIC chain; allocates dope vectors.
PBS1	Gets next item in chain.
SKARGL	Allocates storage for skeleton argument lists appearing in STATIC chain.
SKARG1	Allocates storage required.
SKDV1	Creates skeleton dope vector dictionary entries for non-structured variables in AUTOMATIC and CONTROLLED storage.
SKENT3	Constructs skeleton dope vector dictionary entries for function values.
STRALO	Calculates number of elements in structure arrays to be initialized; calculates size of storage for all structures.
STRSCN	Creates skeleton dope vector dictionary entries for structures in AUTOMATIC and CONTROLLED chains.
TEMPDV	Creates skeleton dope vector dictionary entry for temporary workspace.

able PL. Phase PL Storage Allocation Symbol Table and DEDs

Statement or Operation Type	Main Processing Routine	Subroutines Used
Allocates STATIC storage for all symbol tables and DEDS	IEMPL	BCSCAN, CCSCAN, CNSCAN, SCSCAN
Scans STATIC chain for symbol and DED variables	SCSCAN	DEDAL1, STRSCN, SYMTAB
Scans CONTROLLED chain for symbol and DED variables	CCSCAN	DEDAL1, STRSCN, SYMTAB
Scans PROCEDURE block chain of ENTRY type 1 entries	BCSCAN	ACSCAN, DEDAL1
Scans AUTOMATIC chain for symbol and DED variables	ACSCAN	DEDAL1, STRSCN, SYMTAB
Scans chain of members of particular structure for symbol and DED variables	STRSCN	DEDAL1, SYMTAB
Allocates storage for symbol tables	SYMTAB	DEDAL2
Allocates storage for DEDS	DEDAL (two entry points: DEDAL1, DEDAL2)	None

Table PL1. Phase PL Routine/Subroutine Directory

Routine/Subroutine	Function
ACSCAN	Scans AUTOMATIC chain for symbol and DED variables.
BCSCAN	Scans procedure block chain of ENTRY type 1 entries.
CCSCAN	Scans controlled chain for symbol and DED variables.
CNSCAN	Scans constants chain for DED variables.
DEDAL1 (PM)	Allocates storage for DEDs.
IEMPL	Allocates STATIC storage for symbol tables and DEDs.
SCSCAN	Scans STATIC chain for symbol and DED variables.
STRSCN	Scans chain of members of particular structure for symbol and DED variables.
SYMTAB (PM)	Allocates storage for symbol tables.

Table PP. Phase PP Storage Allocation Sort of AUTOMATIC Chain

Statement or Operation Type	Main Processing Routine	Subroutines Used
Scans BEGIN-ENTRY for ENTRY type 1 entries	RA0	SETCH, SCRUB1, SORCH
Scans AUTOMATIC chain from each ENTRY type 1 entry	SETCH	EXDT, SRCH2
Adds ON conditions to first AUTOMATIC zone	SC24	None
Adds temporaries (type 2) and independent items to first zone	SC31	None
Adds dependent items to subsequent zones	SC44	None
Determines list of dependencies from INITIAL attribute	SC39	SCNCHN, SRCH2
Determines list of dependencies from DEFINED attribute	SC40	SCNCHN, SRCH2
Determines list of dependencies for array bound expressions	SC35	EXDT, SCNCHN
Determines list of dependencies for string length expressions	SC50	SCNCHN, SRCH2
Removes independent item dictionary references upon which items in the AUTOMATIC chain depend.	SCRUB1	None

Table PP1. Phase PP Routine/Subroutine Directory

Routine/Subroutine	Function
EXDT	Scans dimensions tables for second file statements with adjustable bounds.
RA0	Scans BEGIN-ENTRY for entry type 1 entries.
RA1	Tests for end of ENTRY type 1 chain.
RA4	Creates an AUTOMATIC chain delimiter.
RA7	Tests for end of chain.
SCNCHN	Scans current AUTOMATIC chain; determines whether reference belongs to it.
SCRUBI	Removes independent item dictionary references from the stack of dictionary references upon which items in the AUTOMATIC chain depend.
SC24	Adds ON conditions to first automatic zone.
SC31	Adds temporaries (type 2) and independent items to first zone.
SC35	Determines list of dependencies for array bound expressions.
SC39	Determines list of dependencies from INITIAL attribute.
SC40	Determines list of dependencies from DEFINED attribute.
SC44	Adds dependent items to subsequent zones.
SC50	Determines list of dependencies for string length expressions.
SETCHN	Scans AUTOMATIC chain from each ENTRY type 1 entry.
SORCH	Sorts chain in order of dependencies; creates zone delimiter dictionary entries.
SRCH2	Scans second file statements for dictionary references of labels, data items, and structures, which may belong to the current AUTOMATIC chains.

● Table PT. Phase PT Storage Allocation AUTOMATIC Storage

Statement or Operation Type	Main Processing Routine	Subroutines Used
Scans stacked CONTROLLED chain for largest dope vector	MYNAM	DVSIZE
Initializes ENTRY type 1 chain scan and DSA	DSALOC	MKSTAT
Allocates slots for ON conditions	DSA4	MKSTAT
Allocates storage for workspace and for DSA addressing vector	DSA10	None
Scans AUTOMATIC chain and allocates storage for dope vectors	DSA16	COPY, DVSIZE, INITDV, MKSTAT, STDVIN
Allocates BUY workspace	DSA17	None
Allocates storage for parameters	DSA19	None
Allocates storage for double precision variables	DSA25	None
Allocates storage for single precision variables	DSA29	None
Allocates storage for character strings and halfword binary	DSA38	None
Allocates storage for bit strings	DSA46	None
Allocates storage for arrays and secondary dope vectors	DSA54	COPY, INITDV, MKSTAT, SDVCDE
Allocates storage for structures	DSA68	COPY, MKSTAT
Gets VDA and initializes dope vectors for adjustable regions of AUTOMATIC chain	DSA72	COPY, INITDV, MKSTAT, STDVIN
Allocates storage for DEFINED items	DSA98	None

• Table PT1. Phase PT Routine/Subroutine Directory

Routine/Subroutine	Function
CONT1	Scans controlled chain for size of longest dope vector.
COPY	Compiles code to copy skeleton dope vector into real dope vector.
DSALOC	Initializes ENTRY type 1 chain scan and DSA.
DSA4	Allocates slots for ON conditions.
DSA5	Allocates standard save area and flag bytes.
DSA10	Allocates storage and workspace for DSA addressing vector.
DSA16	Scans AUTOMATIC chain and allocates dope vectors.
DSA17	Allocates BUY workspace.
DSA19 (PU)	Allocates storage for parameters.
DSA25 (PU)	Allocates storage for double precision variables.
DSA29 (PU)	Allocates storage for single precision variables.
DSA38 (PU)	Allocates storage for character strings and halfword binary.
DSA46 (PU)	Allocates storage for bit strings.
DSA54	Allocates storage for arrays and secondary dope vectors.
DSA68	Allocates storage for structures.
DSA72	Initializes dope vectors for adjustable regions of AUTOMATIC chain.
DSA74	Stores pointer to skeleton second file statement.
DSA98	Allocates storage for DEFINED items.
DSA161	Allocates storage required for dope vectors.
DSA162	Compiles code to initialize dope vectors.
DSA952	Gets VDA for this region of AUTOMATIC chain if required.
DVSIZE (PU)	Determines size of dope vectors.
INITDV	Compiles code to initialize address slot in dope vector.
MKSTAT	Makes a second file statement.
MYNAM	Scans CONTROLLED chains.
SDVCDE (PU)	Compiles code for secondary dope vectors.
STDVIN	Initializes structure member dope vectors.

Table QF. Phase QF Storage Allocation Prologues

Statement or Operation Type	Main Processing Routine	Subroutines Used
Scans text for statement labels, PROCEDURE statements, BEGIN statements, BEGIN END statements, and end-of-program marker	QF0000	QBEGEP, QBPROL, QEOP, QMOVE, QPROL, QSL
Processes statement label pseudo-code items	QSL	QMOVE
Frees text storage at end of phase; releases control	QEOP	QMOVE
Creates stereotyped prologue for a BEGIN block requiring a dynamic storage area	QBPROL	QADJAL, QFSKIP, QF0201, QMOVE
Creates stereotyped or special prologues for PROCEDURE statements, depending on conditions. Processes statement label pseudo-code items	QPPROL	QADJAL, QFSKIP, QF0201, QMOVE, QONPRL
Creates a compiler label marking the return from a BEGIN block	QBEGEP	QADJAL, QF0201, QMOVE
Creates a prologue for ON block	QONPRL	QADJAL, QFSKIP, QF0201
Assembles code to initialize DSA dope vector data areas, and to allocate variable data areas	QADJAL	QMOVE1
Skips second file statements following a block heading statement	QFSKIP	None
Obtains new buffer and chains it to the previous one	QF0201	None
Moves input text being skipped from input buffer to output buffer	QMOVE	None
Moves a second file statement, pointed at by PAR1, to the prologue being generated	QMOVE1	QMOVE

Table QF1. Phase QF Routine/Subroutine Directory

Routine/Subroutine	Function
QADJAL	Assembles code to initialize DSA dope vector, variable data areas, and to allocate variable data areas.
QBEGEP	Creates a compiler label marking the return from a BEGIN block.
QBPROL (QG)	Creates stereotyped prologue for a BEGIN block requiring a dynamic storage area.
QEOP	Frees text storage at end of phase; releases control.
QFSKIP (QG)	Skips second file statements following a PROCEDURE or BEGIN statement.
QF0000	Scans text for statement labels, PROCEDURE statements, BEGIN statements, BEGIN END statements, and end-of-program marker.
QF0201 (QG)	Moves code to output buffer; obtains new buffer if required.
QF0360	Tests for external procedure.
QF0370	Generates prologue for GET DSA.
QF0570	Generates code to copy argument and target addresses.
QF0625	Tests for entry points.
QF0860	Tests end of chain.
QF1172	Tests end of first region.
QF1194	Extracts mapping code from second file.
QF1215	Tests for storage required.
QF1511	Removes VDA accumulator assignment code from mapping code.
QMOVE	Moves text from input buffer to output buffer.
QMOVE1	Moves second file statement to prologue being generated.
QONPRL (QH)	Creates prologue for ON block.
QPPROL (QG)	Creates stereotyped or special prologues for PROCEDURE statements, depending on conditions.
QSL	Processes statement label pseudo-code items.

Table QJ. Phase QJ Storage Allocation Dynamic Storage

Statement or Operation Type	Main Processing Routine	Subroutines Used
General scan of text for ALLOCATE, BUY and FREE statements	GS1	ALLOC, BUY, BUYP, FREE, TRF1.
Allocates items not requiring dope vector	AL20	AL15, TRF2
Generates code to move skeleton dope vector into workspace for controlled variables	MOVEDV	TRF2
Looks ahead to reverse pointers for ALLOCATE statements	REVPT	GS1, TRF1
Allocates storage for controlled string	AL28	GS1, LIBC1, LIBC2, SCANSF, TRF2
Allocate storage for controlled array	AL27	ABOUND, LIBC1, MOVEDV, PREVAL, SCANSF, TRF2
Allocates storage for controlled structure	AL29	BNDEXP, LIBC1, MOVEDV, NXTREF, NXTVAR, PREVAL, SCANSF, TRF2
Loads Library call parameter register to free allocated storage	FREE	TRF2, TRF3
Moves skeleton dope vector for bought temporary	BUYP	TRF2
Buys storage for temporary array	BY14	SCANSF, TRF2
Buys storage for temporary structure	BY13	LIBC4, NXTREF, NXTVAR, SCANSF, TRF2
Places initial value code line for controlled variables	AL15	NXTRF, SCANSF
Skips scan register over initialization statements	SKIPTX	GS1
Generates code to set a pointer to the previous allocation.	PREVAL	TRF2
Searches dimension tables for adjustable bound expressions	ABOUND	SCANSF
Generates code for temporary variables requiring only a dope vector	STMP	LIBC3, TRF2

Table QJ1. Phase QJ Routine/Subroutine Directory

Routine/Subroutine	Function
ABOUND (QK)	Searches dimension tables for adjustable bound expressions.
ALLOC (QK)	Ascertains the type of allocate statement.
AL15	Places initial value code line for controlled variables.
AL20 (QK)	Allocates items not requiring dope vector.
AL27 (QK)	Allocates storage for controlled arrays.
AL29 (QK)	Allocates storage for controlled structures.
BNDEXP	Generates or extracts code to set the adjustable bounds of structures.
BUY	Ascertains the type of buy.
BUYP	Moves skeleton dope vector for bought temporary.
BY13	Buys storage for temporary structure.
BY14	Buys storage for temporary array.
BY15	Buys storage for temporary string.
FREE (QK)	Loads Library call parameter register to free allocated storage.
GS1	General scan of text for ALLOCATE, BUY, and FREE statements.
LIBC1/LIBC2/LIBC4	Places the library calling sequence for controlled storage in sequence in the text.
MOVEDV (QK)	Generates code to move skeleton dope vector into workspace for controlled variables.
NXTREF (QK)	Obtains the next structure base element reference.
NXTVAR (QK)	Obtains the next varying array base element reference.
PREVAL (QK)	Generates code to set a pointer to the previous allocation.
REVPT	Looks ahead to reverse pointers for ALLOCATE statements.
SCANSF	Places second file statement in the line in the text.
SKIPTX	Skips scan register over initialization statements.
STMP (QK)	Generates code to buy storage for temporary variables which only require a dope vector.
TRF1	Transfers input text to output.
TRF2	Adds text skeletons to the output text.
TRF3	Adds the Library Calling sequence to the output text.

• Table QU. Phase QU Alignment Processor

Statement or Operation Type	Main Processing Routine	Subroutines Used
Tests pseudo-code instructions for misaligned operands and deduces the correct alignment	ALIGNQ	ALREGQ,MVCMAK,REGENT
Generates a move character (MVC) instruction for a misaligned operand	MVCMAK	ABEOT,NEXREG,OUTEST,PSMOVE,REMOVE, SNEXT,TRANS
Skips a pseudo-code item	T3	TNEXT
Processes the load address (LA) pseudo-code instruction	TLA	TRR
Processes the library calling sequence in the pseudo-code	TLTB	ABEOT,T3
Processes the L pseudo-code instruction	TLL	ALIGNQ,ALREGQ,OUTEST,PSMOVE,REMOVE, SNEXT,TRANS,TRR
Processes pseudo-code instructions, other than L and LA, that may have misaligned operands	THT	ALIGNQ,TRRS
Examines a pseudo-code item and passes control to the appropriate processing routine	TRANS	T3,TABS,TDROP,TEOP,THT,TLA,TLIB, TLL,TRR,TSN

• Table QU1. Phase QU Routine/Subroutine Directory

Routine/Subroutine	Function
ABEOT	Outputs termination error message.
ALREGQ	Tests whether or not the register is in the register table.
NEXREG	Gets a symbolic register.
OUTEST	Gets a new output text block if required.
PSMOVE	Fills current output text block and gets a new one.
REGENT	Makes an entry in the register table for a register that has been loaded with the address of a misaligned operand.
REMOVE	Copies text into the output text block.
SNEXT	Accesses next pseudo-code item in the source text.
TABS	Scans absolute code and copies it onto the output text if necessary.
TDROP	Removes dropped registers from the register table.
TEOB	At the end of a source text block, moves out the scanned text and gets the next source text block.
TEOP	At the end of the program, outputs the remaining text, and releases control.
TRR	Deletes an assigned register from the register table.
TSN	Updates the statement number slot in the communications region.

Table QX. Phase QX Print Aggregate Length Table

Statement or Operation Type	Main Processing Routine	Subroutines Used
Scan storage chains in dictionary for aggregate entries	SCANC	ANAGG, PRNTAB
Analyze aggregate dictionary entries and print table entry	ANAGG	ANCOB,EXTENT,FINALA,FIRSTA,FORMAL, GETVO,GETSB,MAKEN,PRHED,SORTEN, VOPLUS

Table QX1. Phase QX Routine/Subroutine Directory

Routine/Subroutine	Function
ANAGG	Analyzes dictionary entries for a major structure or non-structured array.
ANCOB	Finds original major structure dictionary entry for a COBOL major structure.
EXTENT	Calculates length in bytes of a data variable, label, task, event, or area.
FINALA	Calculates address of final basic element of a major structure.
FIRSTA	Calculates address of first basic element of a major structure.
FORMAL	Calculates length of a non-structured array.
GETVO	Gets virtual origin of a dimensioned variable.
GETSB	Sets pointer to BCD in a dictionary entry.
MAKEN	Makes an entry in text block for each aggregate.
PRHED	Prints main heading and sub-heading of table.
PRNTAB	Prints Aggregate Length Table.
SCANC	Scans STATIC, AUTOMATIC and CONTROLLED chains in dictionary for aggregate entries.
SORTEN	Sorts text block entry for aggregate so that the entries are chained in collating sequence order of the aggregate identifiers.
VOPLUS	Calculates address of first or last element of major structure.

● Chart 10. Register Allocation Logical Phase Flowchart

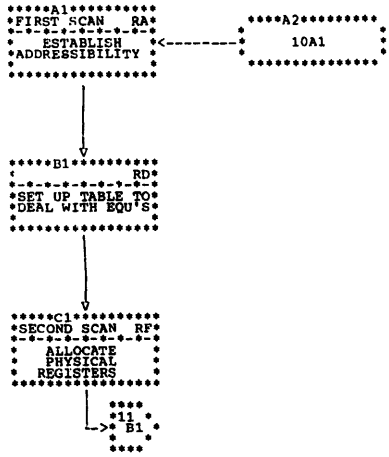

Chart RA. Phase RA Overall Logic Diagram

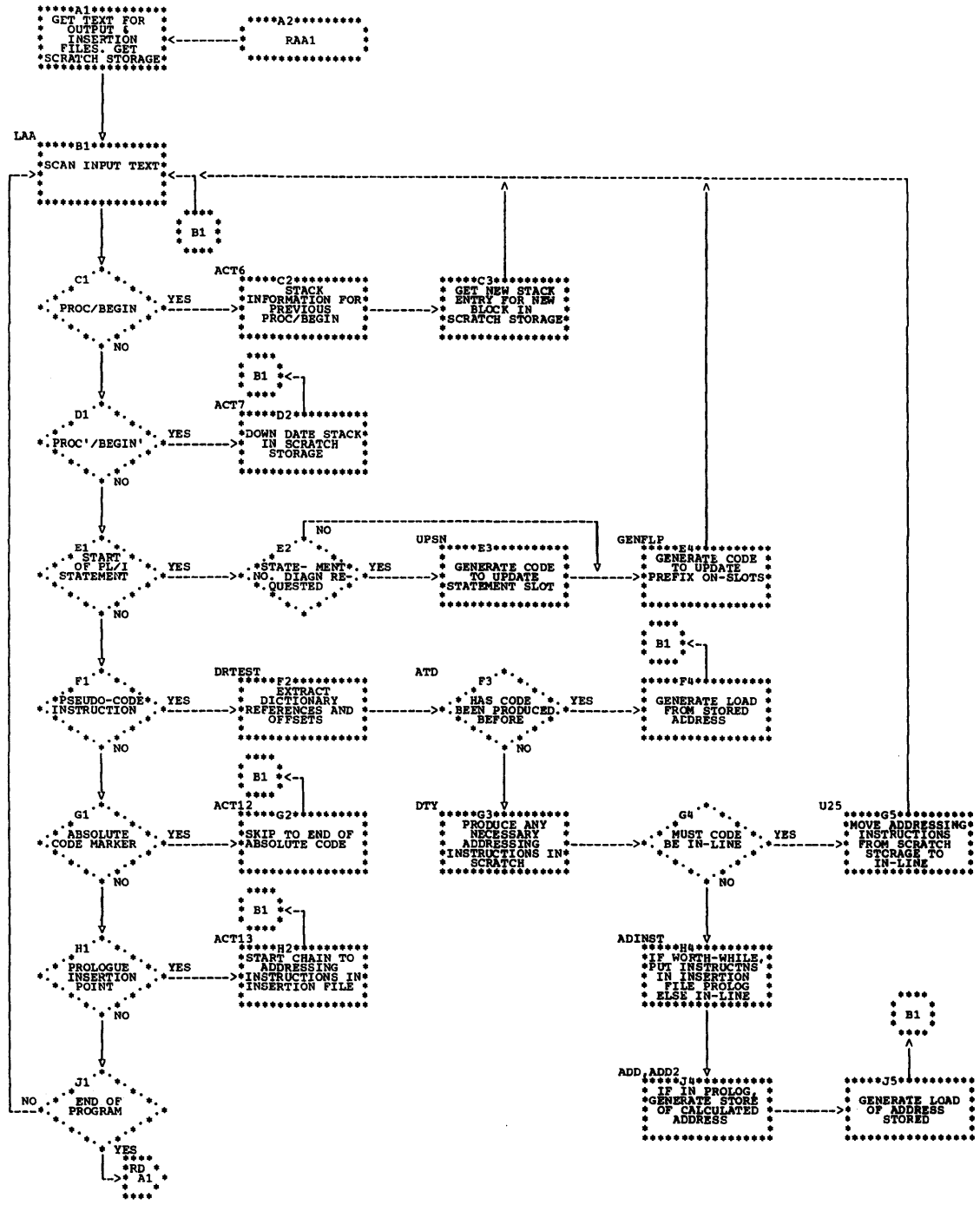

● Chart RD. Phase RD Overall Logic Diagram

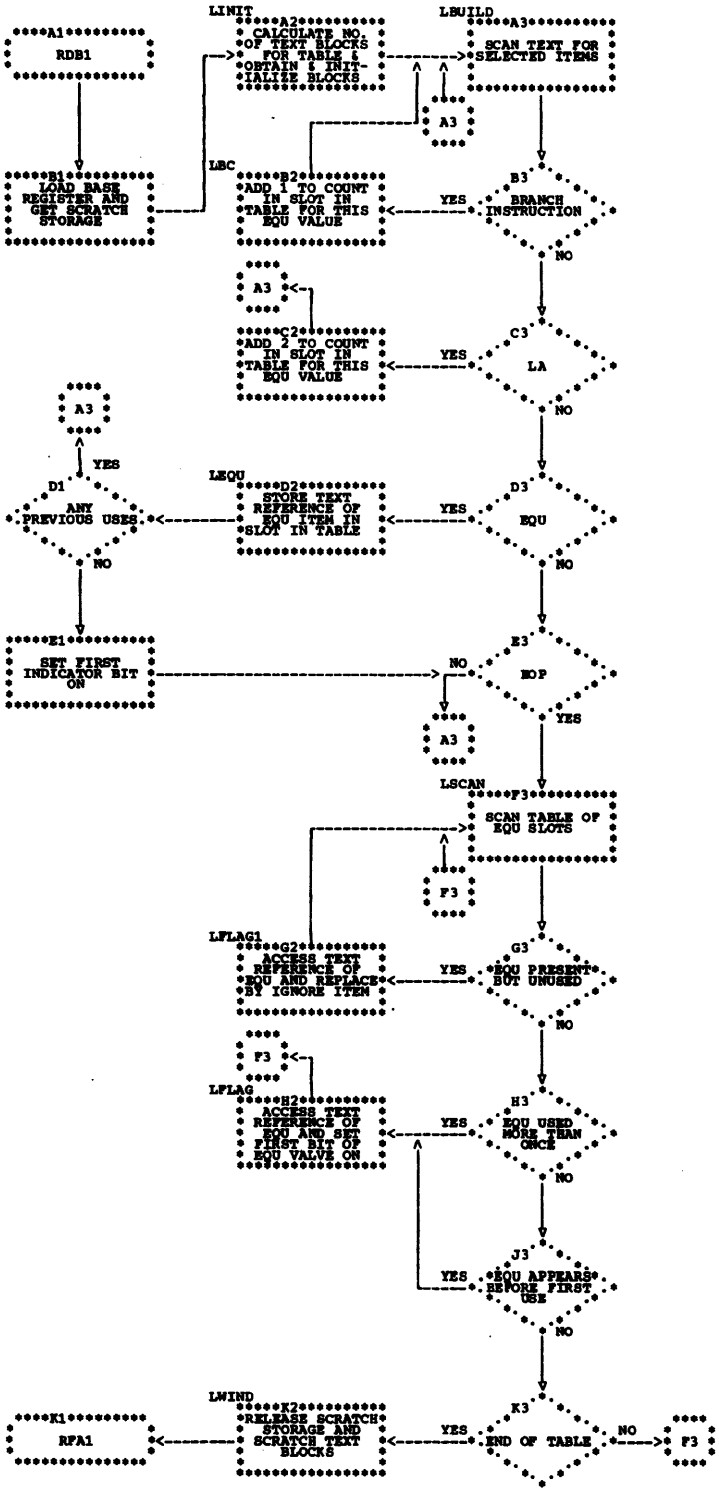

Chart RF. Phase RF Overall Logic Diagram

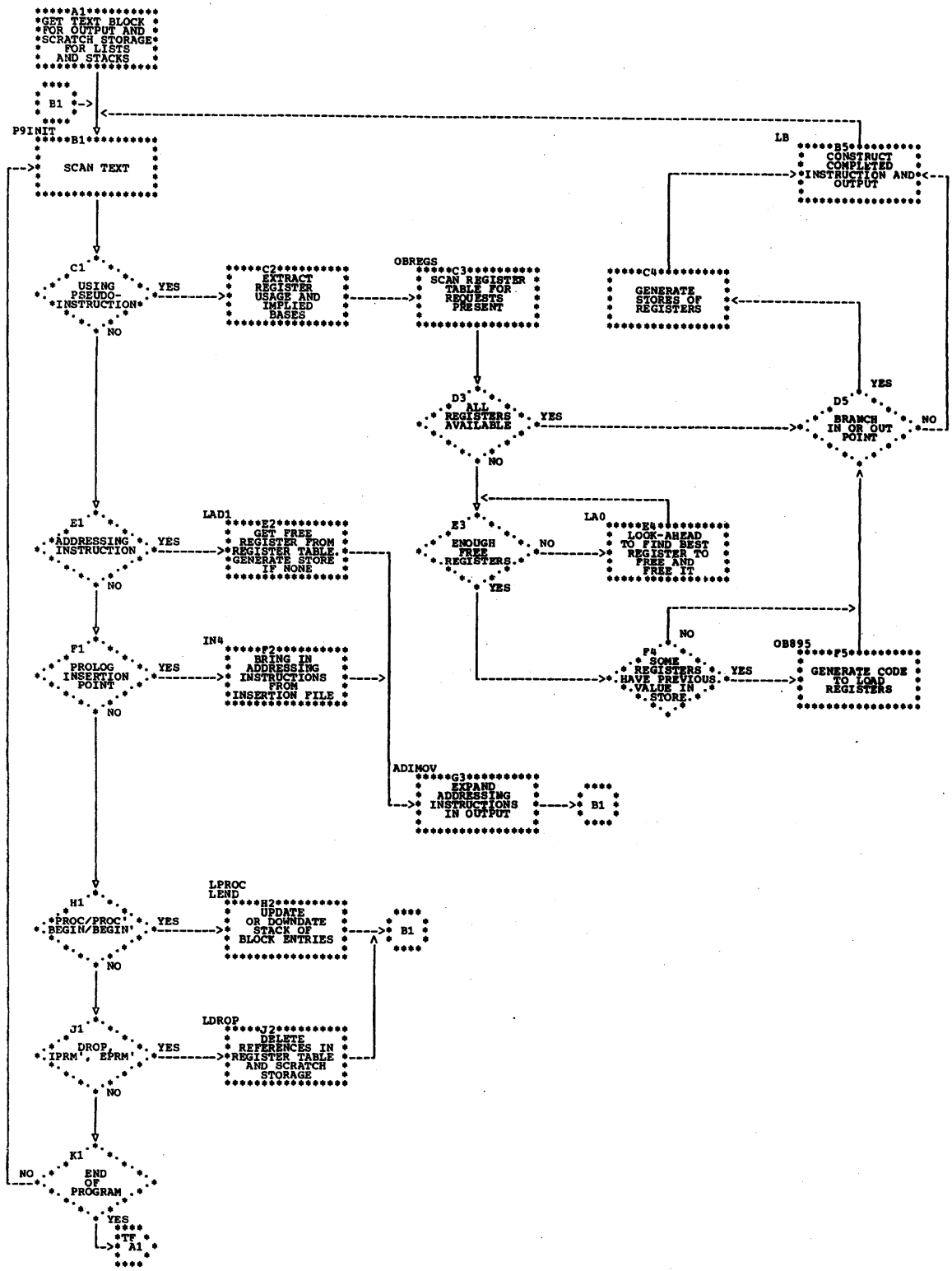

Table RA. Phase RA Register Allocation Addressibility Analysis

Statement or Operation Type	Main Processing Routine	Subroutines Used
Controls scan of source	LAA	ACT1, ACT2, ACT5, ACT8, ACT9, ACT10, ADCBUF, GETSBF
Processes RX, RS, or SI instructions	ACT3	ADTEST, DRTEST
Processes SS instructions	ACT4	ADTEST, DRTEST
Compiles code for start of PL/I Statement: 1. with label, 2. without label, 3. compiler label	ACT15, ACT14, ACT16	ADCBUF, GENFLP, UPSN
Processes PROCEDURE and BEGIN blocks	ACT6	ADCBUF
Processes END statements on PROCEDURE or BEGIN blocks	ACT7	ADCBUF
Adds text to output string	ADCBUF	GETCBF
Adds text to insertion file	ADIBUF	GETIBF
Obtains new source buffer	GETSBF	None
Obtains next output buffer	GETCBF	None
Obtains next insertion file buffer	GETIBF	None
Examines dictionary reference in source	DRTEST	ADINST, DECOMP, SETBLK
Produces recovery code when literal offset greater than 4095 is met	ADTEST	ADCBUF
Creates coded addressing instructions	ADINST	ADCBUF, ADIBUF

Table RA1. Phase RA Routine/Subroutine Directory

Routine/Subroutine	Function
ACT1	Copies non-special three-byte item to output.
ACT2	Copies non-special five-byte item to output.
ACT3	Processes RX, RS, or SI instructions.
ACT4	Processes SS instructions.
ACT5	End of block routine.
ACT6	Processes PROCEDURE and BEGIN blocks.
ACT7	Processes END statements on PROCEDURE or BEGIN blocks.
ACT8	End of source text routine.
ACT9	Action of start of common block of prologue.
ACT10	Action at end of prologue.
ACT12	Copies absolute code to output stream.
ACT13	Creates ADI instruction at prologue insertion point.
ACT14	Compiles code for start of PL/I statement with label.
ACT15	Compiles code for start of PL/I statement without label.
ACT16	Compiles code for start of PL/I statement compiler label.
ADD/ADD2	Generates store of calculated address.
ADCBUF	Adds text to output string.
ADIBUF	Adds text to insertion file.
ADINST	Creates coded addressing instructions.
ADTEST	Produces recovery code when literal offset greater than 4095 is met.
ATD	Tests whether previous offset is out of bounds.
DECOMP	Decodes dictionary reference.
DRTEST (RB)	Examines dictionary reference in source.
DTY	Scans step table and generates addressing instructions.
GENFLP	Generates code to set bits on and off in a prefix ON-slot.
GETCBF	Obtains next output buffer.
GETIBF	Obtains next insertion file buffer.
GETSBF	Obtains next source buffer.
LAA	Scans input text.
L125	Moves addressing instructions to IN-LINE.
SETBLK	Finds block number of referenced item.
UPSN	Generates code to keep the statement number slot in the DSA up to date.

• Table RD. Phase RD Use Determination of all EQUs

Statement or Operation Type	Main Processing Routine	Subroutines Used
Initializes text blocks for tables	LINIT	None
Scans text	LBUILD	LEQV, LBC, LBAL, LOBR, LEOB, LABS, L3BYT, L5BYT, LVARB, LSTAT, L2BYT, LEOP
Processes EQU items	LEQU	FNDIND
Processes BC items	LBC	FNDIND
Processes BAL items	LBAL	LOBR, L5BYT
Processes any other branch item	LOBR	FNDIND
Skips a 2-byte item	L2BYT	None
Skips a 3-byte item	L3BYT	None
Skips a 5-byte item	L5BYT	None
Skips a variable length item	LVARB	None
Processes a statement number item	LSTAT	None
Processes an EOB item	LEOB	None
Scans absolute code	LABS	None
Finds the indicator byte and text reference of an EQU value	FNDIND	None
Ends table build and passes control to second section	LEOP	LSCAN
Scans tables for optimizable EQUs	LSCAN	LFLAG
Flags EQUs in text as optimizable	LFLAG	None

● Table RD1. Phase RD Routine/Subroutine Directory

Routine/Subroutine	Function
FNDIND	Finds indicator byte and text reference of EQU value
LABS	Scans absolute code
LBAL	Process BAL items
LBC	Processes BC items
LBUILD	Scans text
LEOB	Processes EOB items
LEOP	Ends table build and passes control to second section
LEQU	Processes EQU items
LFLAG	Flags EQUs in text as optimizable
LINIT	Initializes text blocks for tables
LOBR	Processes any other branch item
LSCAN	Scans tables for optimizable EQUs
LSTAT	Processes statement number items
LVARB	Skips variable length items
L2BYT	Skips 2-byte items
L3BYT	Skips 3-byte items
L5BYT	Skips 5-byte items

Table RF. Phase RF Register Allocation Physical Registers

Statement or Operation Type	Main Processing Routine	Subroutines Used
Controls scan of text	Z9	ADCBUF, ADIMOV, BR1, BR3, BR4, GETNXT, LBAL, LBALR, LBCTR, LEOB, LEOP, LR1, LR3, LR4, LR6, LR7, LR9, LSHIFT, OBREGS
Processes PROCEDURE or BEGIN statement	LPROC	None
Processes end of PROCEDURE or BEGIN block	LEND	None
Processes requests for registers; allocates physical registers	OBREGS	BRGUSE, LOAD1, STORE1, STORE2, REGUSE
Compiles code to store symbolic registers	STORE2	ADCBUF
Compiles code to store assigned registers	STORE1	ADCBUF
Compiles load of physical registers	LOAD1	ADCBUF
Compiles load register	LOADRG	ADCBUF
Expands coded addressing instructions	ADIMOV	ADCBUF
Adds to output buffer	ADCBUF	None

Table RF1. Phase RF Routine/Subroutine Directory

Routine/Subroutine	Function
ADCBUF	Adds to output buffer.
ADIMOV	Expands coded addressing instructions.
BRGUSE	Tabulates use of base register in look-ahead.
BR1 (RH)	Processes RX branch instructions.
BR3 (RH)	Processes BCT instructions.
BR4 (RH)	Processes RR branch instructions.
FRTEST	Scans list of free registers to make even-odd pair.
GETNXT	Obtains next block.
LAD1 (RH)	Processes AD1 (addressing) instructions.
LB (RH)	Constructs and puts out completed instruction.

Table RF1. Phase RF Routine/Subroutine Directory (cont'd)

Routine/Subroutine	Function
LBAL (RH)	Processes BAL instructions.
LBALR (RH)	Processes BALR instructions.
LBCTR (RH)	Processes BCTR instructions.
LDROP (RH)	Processes DROP pseudo-instruction.
LEND (RH)	Loads end of PROCEDURE or BEGIN block.
LEOB (RH)	Processes end-of-block marker.
LEOP	Processes end-of-program marker.
LOAD1	Compiles load of physical registers.
LOADRG	Compiles load register.
LPROC (RH)	Processes PROCEDURE or BEGIN statement.
LR1 (RH)	Processes instructions in which first and second operands require loading, and the first is altered, e.g., AR.
LR3 (RH)	Processes floating-point instructions.
LR4 (RH)	Processes SS instructions.
LR6 (RH)	Processes instructions where a load of first operand is required, no operands are changed, e.g., ST.
LR7 (RH)	Processes SI instructions.
LR9 (RH)	Processes instructions in which no load of first operand is needed, and it is changed, e.g., LA.
LSHIFT (RH)	Processes shift instructions.
OB560(RG)	Tests whether all registers are available.
OB630 (RG)	Generates stores of registers if branch in or out.
OB895 (RG)	Generates code to load registers.
P9INIT (RH)	Main text scan.
OBREGS (RG)	Processes requests for registers; allocates physical registers.
REGUSE	Tabulates use of registers in look ahead.
STORE1	Compiles code to store assigned registers.
STORE2	Compiles code to store symbolic registers.
W4 (RH)	Extracts ADIs at prologue insertion point.
Z9 (RH)	Controlling scan of text.

● Chart 11. Final Assembly Logical Phase Flowchart

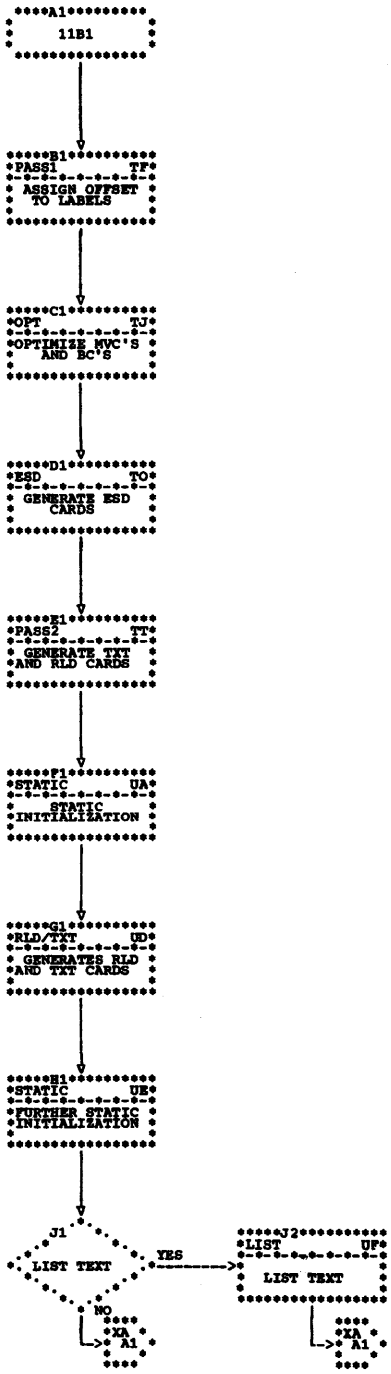

Chart TF. Phase TF Overall Logic Diagram

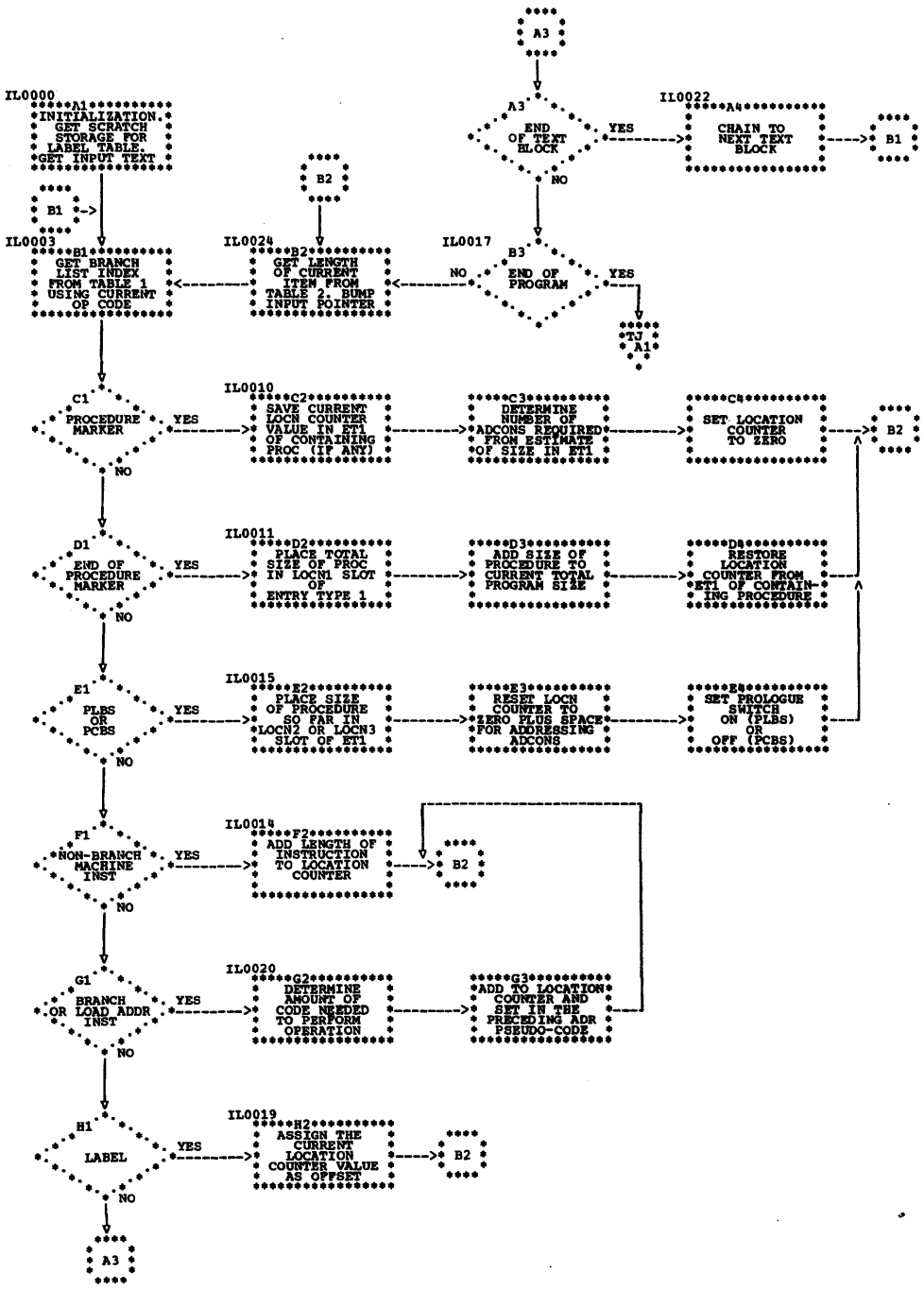

Chart TJ. Phase TJ Overall Logic Diagram

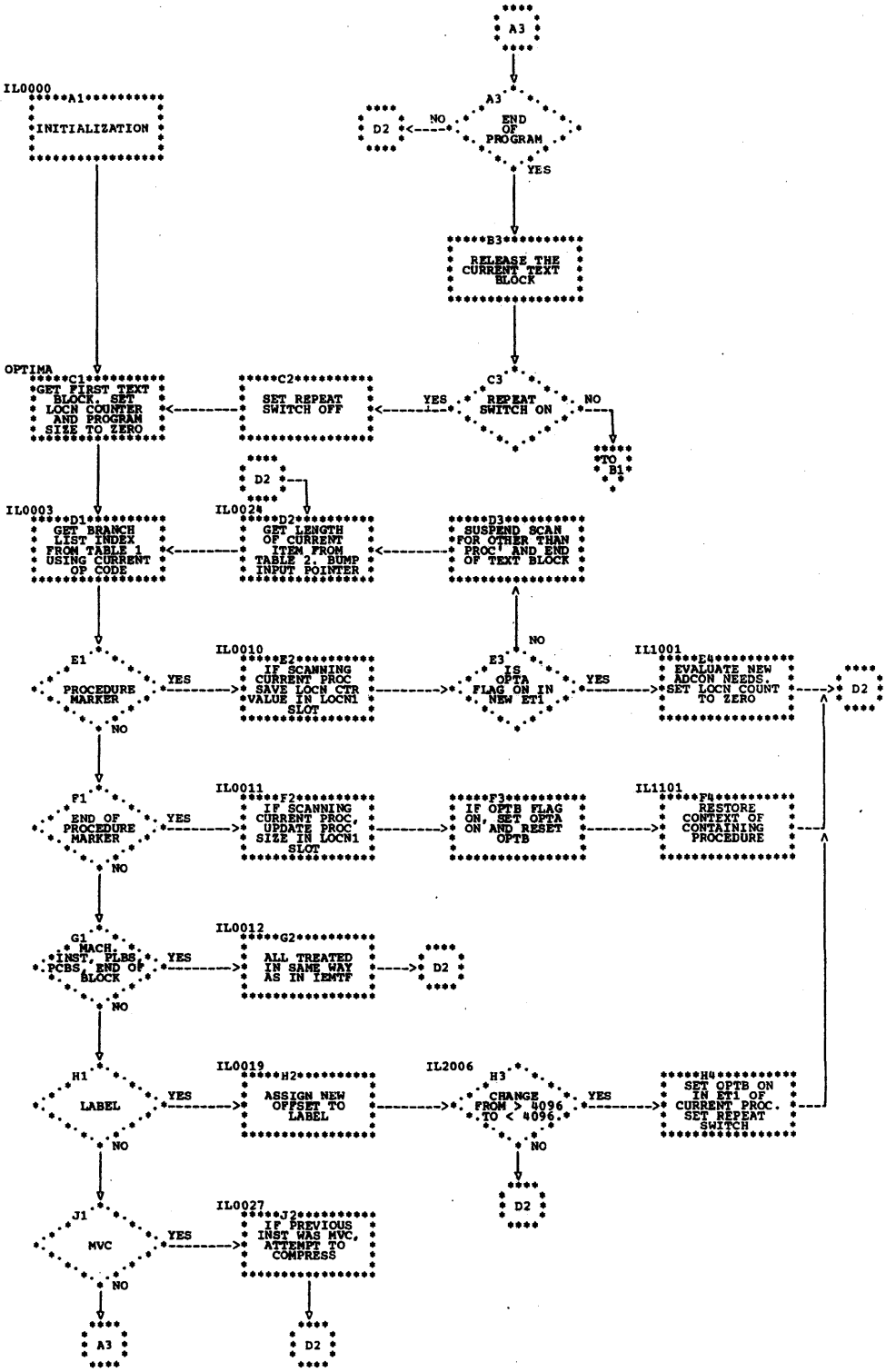

Chart TO. Phase TO Overall Logic Diagram

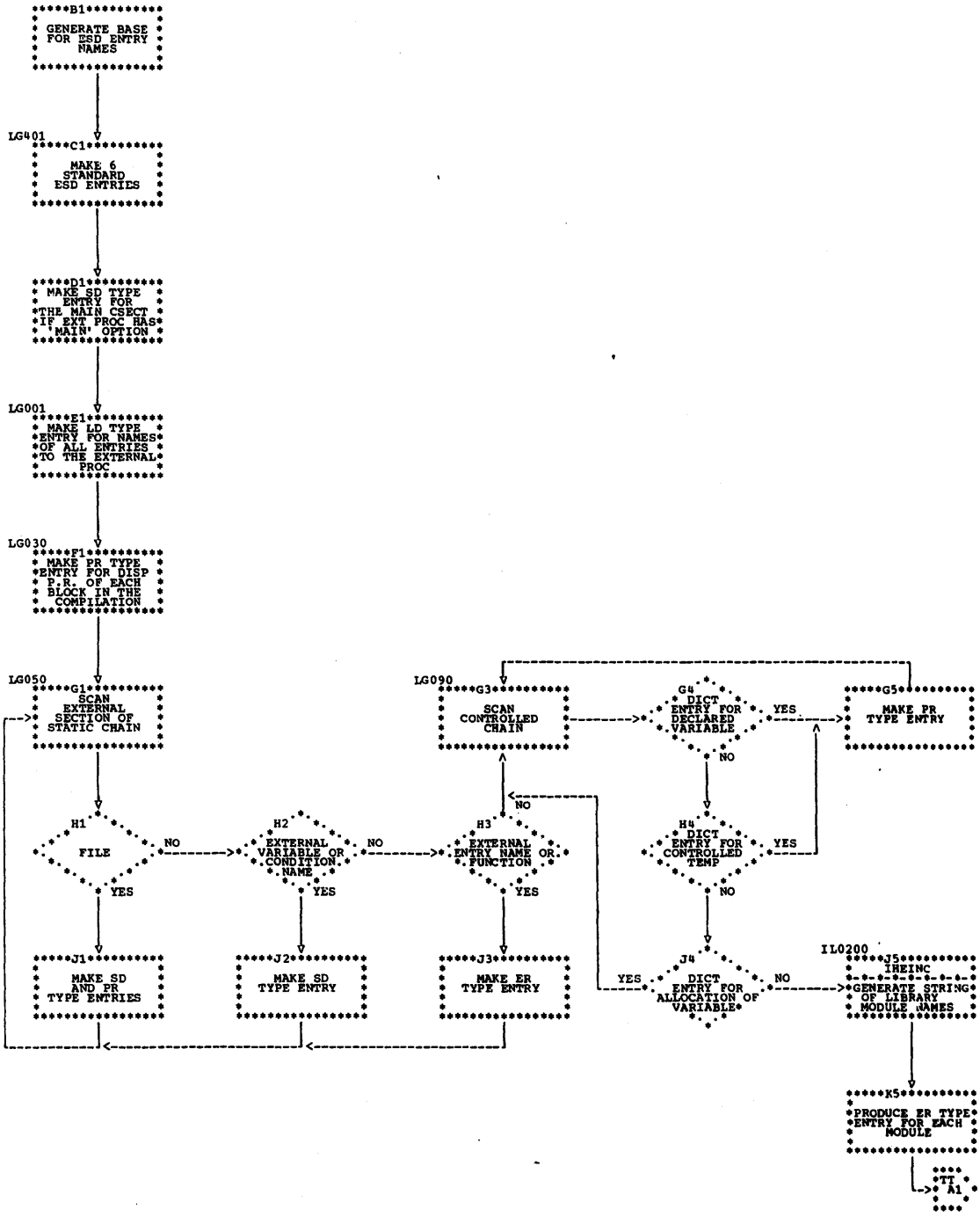

Chart TT. Phase TT Overall Logic Diagram

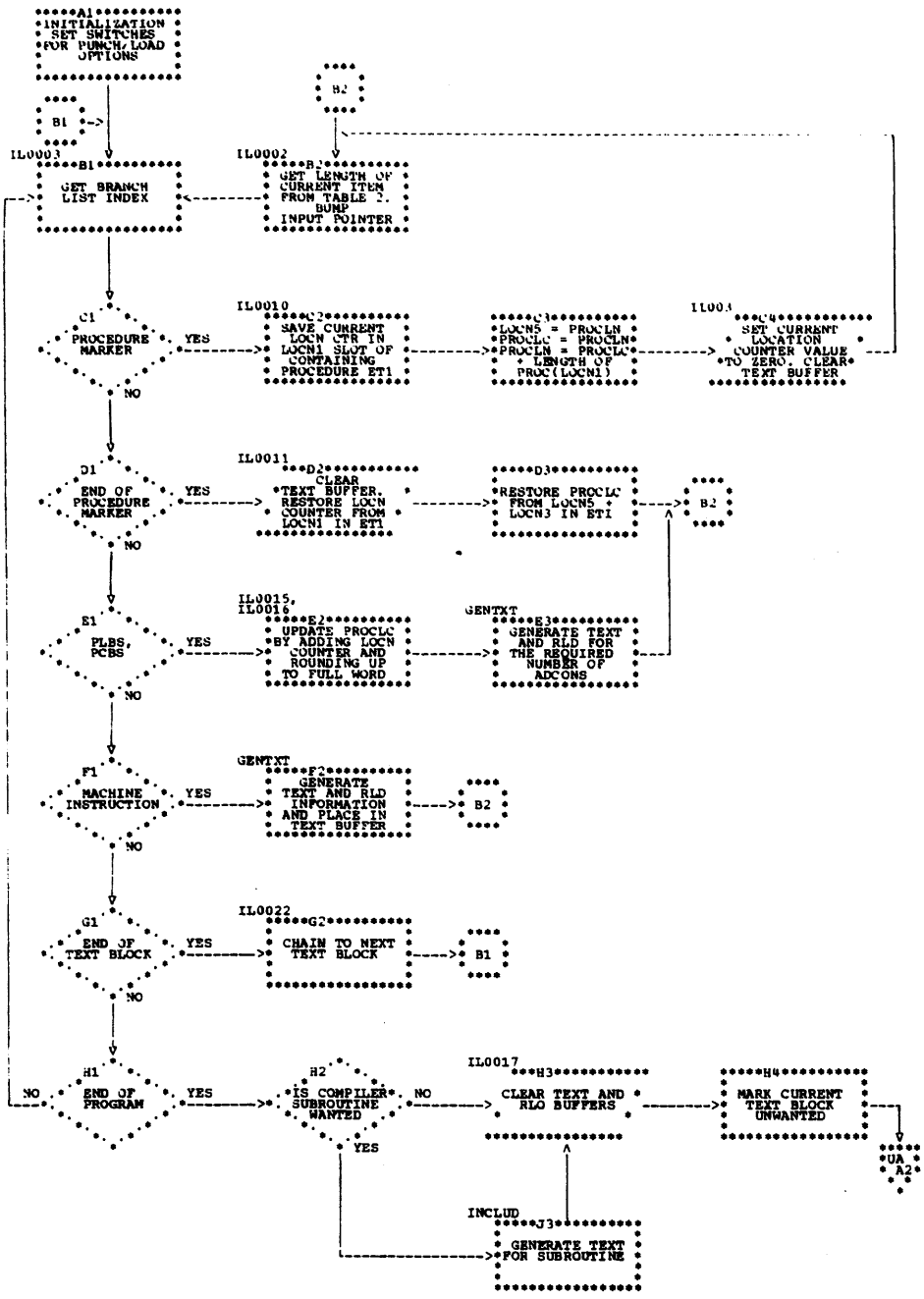

Chart UA. Phase UA Overall Logic Diagram

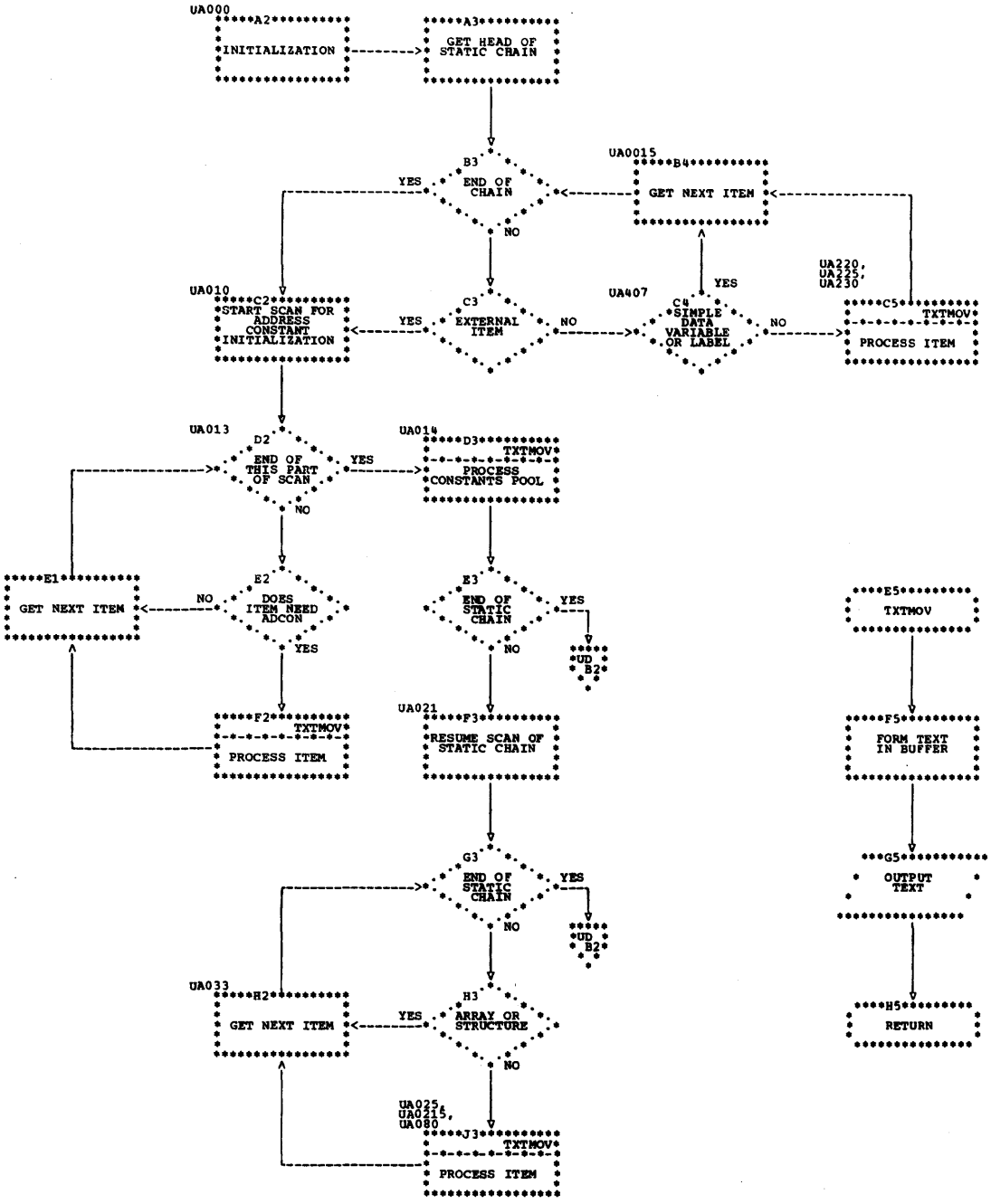

Chart UD. Phase UD Overall Logic Diagram

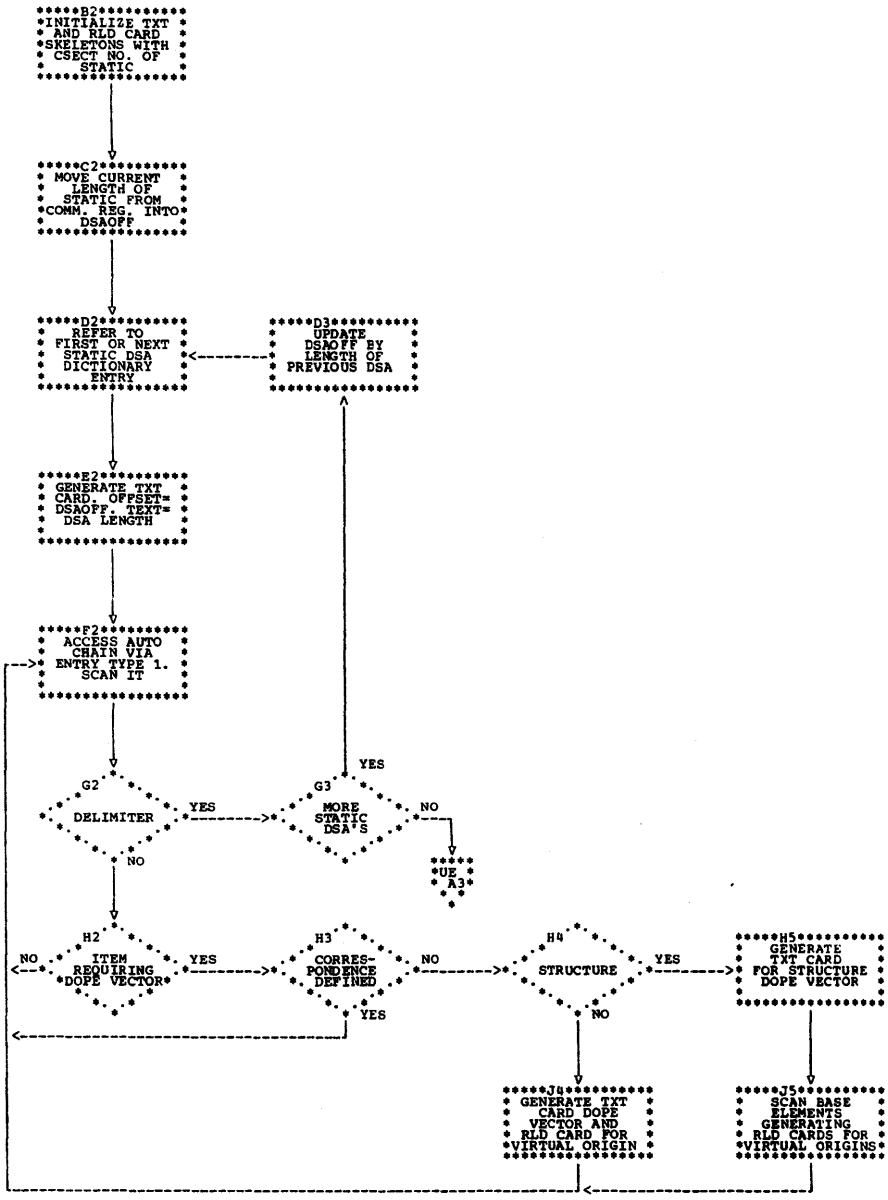

Chart UE. Overall Logic Diagram

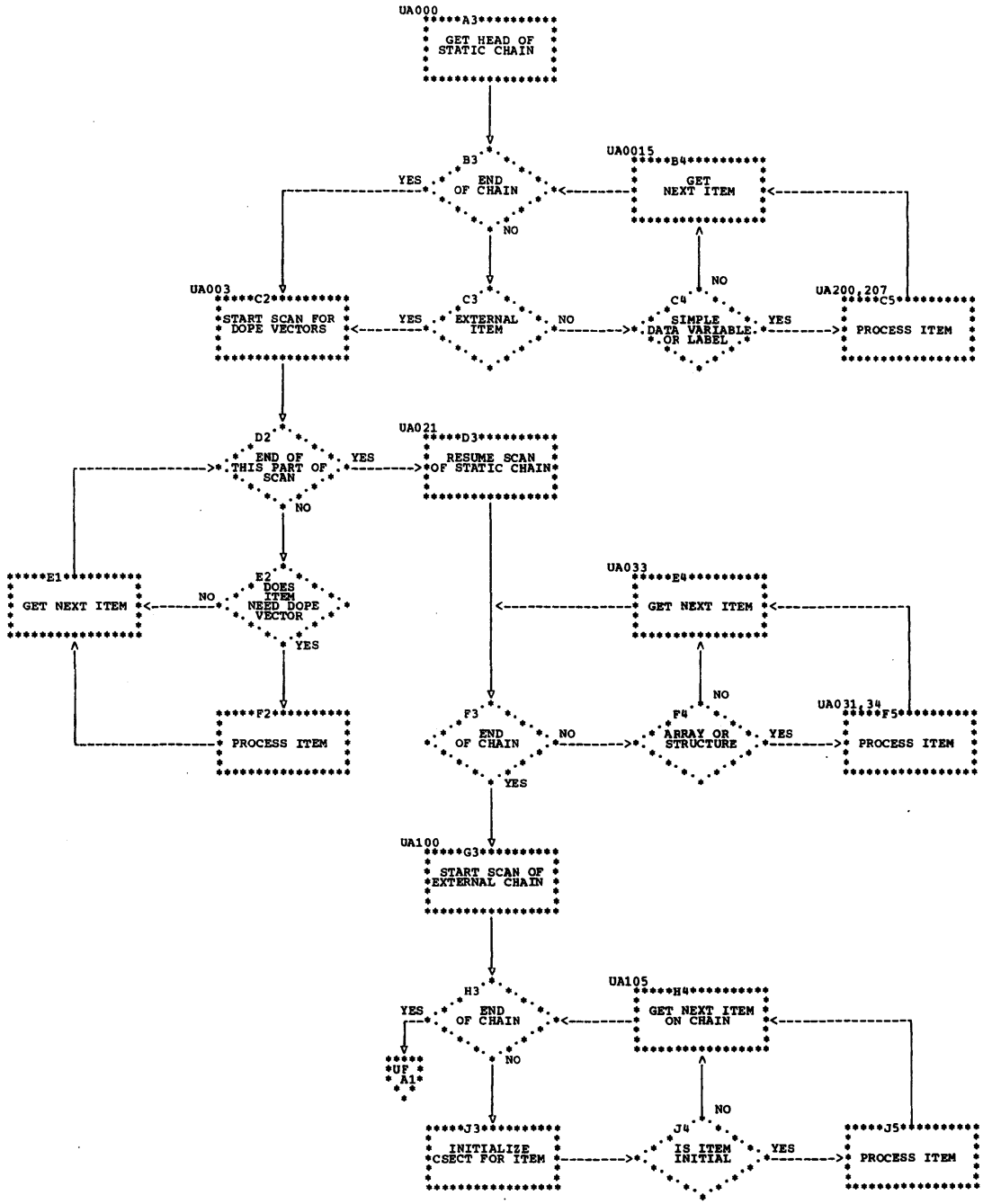

Chart UF. Phase UF Overall Logic Diagram

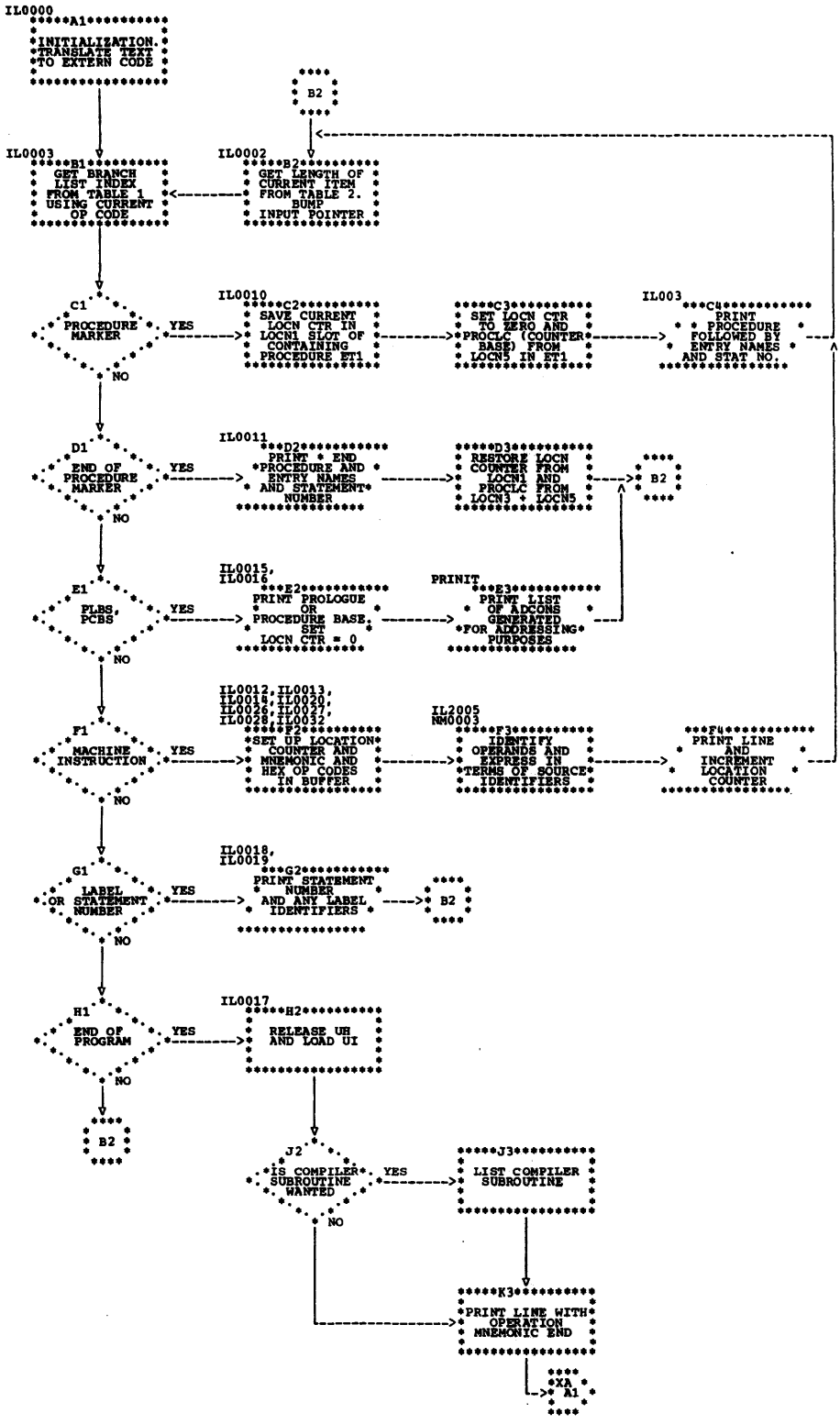

Chart XA. Phase XA Overall Logic Diagram

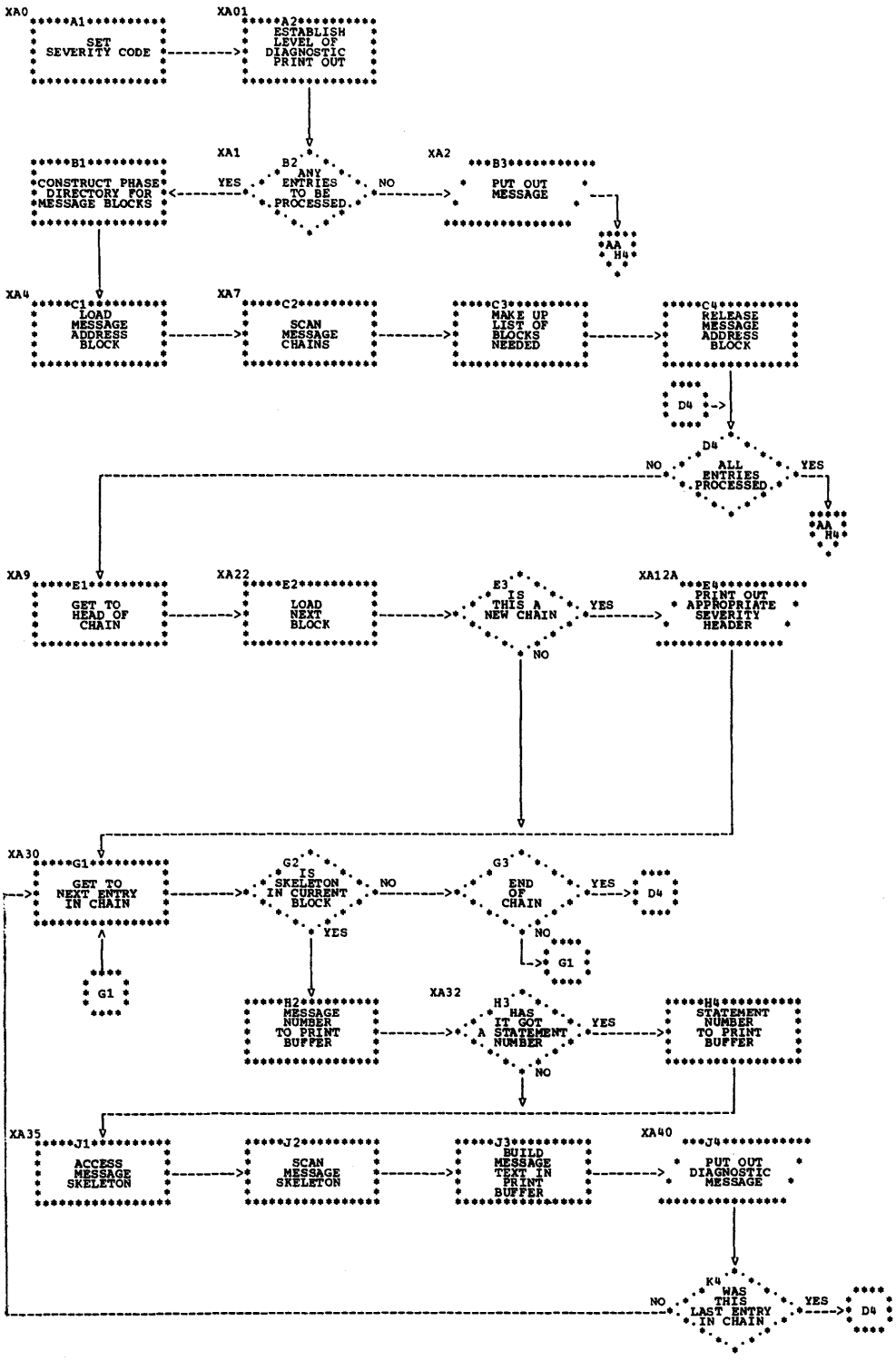

Table TF. Phase TF Final Assembly Pass 1

Statement or Operation Type	Main Processing Routine	Subroutines Used
Scans text	IL0024	None
Assigns offsets to labels	IL0019	FINEQ1, NEXTSL
Increments location counter for machine instructions	IL0014	None
Determines code for instructions which refer to labels	IL0020	FINEQ1
Initializes location counter at start of procedure	IL0010	None
Stores size of procedure and resumes containing procedure	IL0011	None

Table TF1. Phase TF Routine/Subroutine Directory

Routine/Subroutine	Function
FINEQ1	Locates label number table entries.
IL0000	Entry point from compiler control.
IL0003	Entry point to scan from initialization routine.
IL0010	Initializes location counter at start of procedure.
IL0011	Stores size of procedure and resumes containing procedure.
IL0014	Increments location counter for machine instructions.
IL0015	Processes the start of prologues.
IL0017	Releases control.
IL0019	Assigns offsets to labels.
IL0020	Determines code for instructions which refer to labels.
IL0022	Processes end-of-block pseudo-code item.
IL0024	Scans text.
NEXTSL	Determines multiple statement label entries in dictionary.

Table TJ. Phase TJ Final Assembly Optimization

Statement or Operation Type	Main Processing Routine	Subroutines Used
Controls phase	IL0000	OPTIMA
Maintains location counter for machine instructions	IL0014	None
Assigns offsets to labels	IL0019	COMRTN, FINEQ1, NEXTSL
Determines code for instructions which refer to labels	IL0020	FINEQ1
Initialize location counter at start of procedure	IL0010	None
Stores size of procedure for machine instructions	IL0011	None
Reduces number of MVC instructions	IL0027	OFFSET, OSMRTN
Determines offset from a given dictionary reference	OFFSET	None

Table TJ1. Phase TJ Routine/Subroutine Directory

Routine/Subroutine	Function
COMRTN	Determines whether further optimization is possible.
FINEQ1	Locates label number table entries.
IL0000	Controls phase.
IL0003	Entry point to scan loop from initialization.
IL0010	Initializes location counter at start of procedure.
IL0011	Stores size of procedure and resumes containing procedure.
IL0012	Processes machine instructions, etc.
IL0014	Maintains location counter for machine instructions.
IL0019	Assigns offsets to labels.
IL0020	Determines code for instructions which refer to labels.
IL0024	Gets pseudo-code item length and updates text pointer.
IL0027	Elides MVC instructions.
IL1001	Evaluates new ADCON needs. Sets location counter to zero.
IL1101	Restores content of containing procedure.
NEXTSL	Looks for equivalent statement labels.
OFFSET (TK)	Determines offset from a given dictionary reference.
OPTIMA	Scans text.
OSMRTN	Scans ahead for literal offsets.

Table TO. Phase TO Final Assembly External Symbol Dictionary

Statement or Operation Type	Main Processing Routine	Subroutines Used
Constructs first six standard ESD entries	LG401	MOVE, NAME, ERROR
Constructs entries for external procedure labels	LG001	MOVE, ERROR
Constructs PR type entries for each block and procedure	LG030	MOVE, NAME
Constructs entries for external variables and external entry names	LG050	MOVE, ERROR
Constructs entries for controlled variables and task names	LG090	MOVE, NAME, ERROR
Constructs entries for Library conversion modules	IL0200	1HEINC

Table TO1. Phase TO Routine/Subroutine Directory

ROUTINE/SUBROUTINE	FUNCTION
ERROR	Truncates over-length external identifier, generates error message.
LG001	Constructs entries for external procedure labels.
LG030	Constructs PR type entries for each block and procedure.
LG050	Constructs entries for external variables and external entry names.
LG055	Processes ON-conditions and external variables.
LG080	Processes external entry names.
LG085	Processes FILE constants.
LG090	Constructs entries for controlled variables and task names.
LG093	Inserts name in ESD entry for CONTROLLED.
LG401	Constructs first six standard ESD entries.
MOVE	Moves ESD entries to card buffers, and puts out buffer when full.
NAME	Generates names for pseudo-registers.
1HEINC (TQ)	Constructs a string of Library module names.

Table TT. Phase TT Final Assembly Pass 2

Statement or Operation Type	Main Processing Routine	Subroutines Used
Scans text	IL0002	None
Generates text for RR instructions	IL0012	GENTXT
Generates Text for RX non-branch instructions LM, STM, and SI Types	IL0013	EOBRTN, GENTXT, OFFSET
Generates text for shift instructions	IL0027	GENTXT
Generates Text for SS instructions	IL0014	EOBRTN, GENTXT, OFFSET
Sets up trace information and numbers compiler labels	IL0019	GENTXT
Generates text for branch and load address instructions	IL0020	FINEQ1, GENTXT, OFFSET
Initializes location counter at start of procedure	IL0010	PUNCHT
Resumes containing procedure at end of procedure	IL0011	PUNCHT
Moves Text into card image	GENTXT	PUNCHT
Punches cards ensuring that RLD cards follow related TXT card	PUNCHT	CARDOU
Generates text for compiler subroutine	INCLUD	GENTXT

Table TT1. Phase TT Routine/Subroutine Directory

Routine/Subroutine	Function
CARDOU	Directs card image to load file or punch file.
EOBRTN	Chains to next input text block.
FINEQ1	Locates label number table entries.
GENTXT	Moves text into card image.
IL0002	Scans text.
IL0003	Entry point to scan from initialization routines.
IL0010	Initializes location counter at start of procedure.
IL0011	Resumes containing procedure at end of procedure.
IL0012	Generates text for RR instructions.
IL0013	Generates text for RX non-branch branch instructions, LM, STM, and SI type.
IL0014	Generates text for SS instructions.
IL0015	Processes the start of prologues.
IL0016	Processes the end of prologues.
IL0017	End-of-text routine.
IL0019	Sets up trace information and numbers compiler labels.
IL0020	Generates text for branch and load address instructions.
IL0022	End-of-block routine.
IL0027	Generates text for shift instructions.
OFFSET (TU)	Determines offset and relocation pointer from given dictionary reference.
PUNCHT	Punches cards ensuring tnat RLD cards follow related TXT card.

Table UA. Phase UA Final Assembly Initial Values, Pass 1

Statement or Operation Type	Main Processing Routine	Subroutines Used
Scans STATIC chain to beginning of external section	UA001	UA200, UA220, UA230
Initializes scalar variables	UA200	TXTMOV
Initializes BCD for label	UA220	RLDMOV, TXTMOV
Initializes DED for temporary	UA230	TXTMOV
Initializes address constants.	UA010	UA401, UA403, UA404, UA405, UA406
Initializes symbol table entries	UA080	RLDMOV, TXTMOV
Initializes address slots for external variables	UA403	RLDMOV, TXTMOV
Initializes address slots for functions and programmer-defined ON-condition names	UA401	RLDMOV, TXTMOV
Initializes address slots for label constants	UA404	RLDMOV, TXTMOV
Initializes address slots for entry labels	UA405	RLDMOV, TXTMOV
Initializes file attribute entries and files	UA406	RLDMOV, TXTMOV
Initializes constants pool	UA014	RLDMOV, TXTMOV
Initializes dope vector skeletons	UA021	TXTMOV
Initializes argument lists	UA025	RLDMOV, TXTMOV

Table UA1. Phase UA Routine/Subroutine Directory

Routine/Subroutine	Function
OUTPUT (UB)	Moves card images to punch and/or load file.
RLDMOV (UB)	Moves RLD entries to card buffer.
TXTMOV (UB)	Moves TXT entries to card buffer
UA0000	Entry point from compiler control.
UA001	Scans STATIC chain to start of external section, to initialize scalar variables.
UA0015	Return point for branches taken in first scan.
UA010	Initializes address constants.
UA013	Return point for branches taken in second scan.
UA014 (UC)	Initializes constants pool.
UA021	Initializes dope vector skeletons.
UA0215 (UC)	Produces text for dope vector skeleton.
UA025	Initializes argument lists.
UA033	Return point for branches taken in last scan.
UA080 (UC)	Initializes symbol table entries.
UA100 (UC)	Initializes one-word CSECT 'IHEMAIN'.
UA100A	Exit from UA to compiler control and UD.
UA200	Initializes scalar variables.
UA220 (UC)	Initializes BCD for label.
UA225 (UC)	Entry to label routines for label variable BCDs.
UA230 (UC)	Initializes DED and FED for temporary.
UA401	Initializes address slots for functions and programmer-defined ON-condition names.
UA403	Initializes address slots for external variables.
UA404	Initializes address slots for label constants.
UA405	Initializes address slots for entry labels.
UA406	Initializes DECLARE control blocks for files and file attributes entries.
UA407	Makes text for file attributes entry.
UCINIT (UC)	Initializes array variables.
UCUPDT (UC)	Initializes arrays of varying strings.
UC0080 (UC)	Initializes bit arrays.
TIDY (UC)	Completes packing of bit strings in structures or arrays.

Table UD. Phase UD Final Assembly Pseudo-Code Static DSA's

Statement or Operation Type	Main Processing Routine	Subroutines Used
Scans STATIC DSA chain	A1	AUTO
Scans STATIC DSA's AUTOMATIC chain	AUTO	DAT,LAB,STRUC
Initializes dope vectors for data items and label variables (unstructured)	DATLAB	TXTMOV(UB),RLDMOV(UB)
Initializes dope vectors for structures	STRUC	TXTMOV(UB),TLDMOV(UB)

Table UD1. Phase UD Routine/Subroutine Directory

Routine/Subroutine	Function
A1	Scans STATIC DSA chain.
AUTO	Scans STATIC DSAs AUTOMATIC chain.
DATLAB	Initializes dope vectors for data items and labels.
STRUC	Initializes structure dope vectors.
UD000	Entry point
UDEND	Releases control.

Table UF. Phase UE Final Assembly Initial Values, Pass 2

Statement or Operation Type	Main Processing Routine	Subroutines Used
Scans STATIC chain to beginning of external section	UA001	UA200, UA220, UA230
Initializes scalar variables	UA200	TXTMOV (UB)
Scans STATIC chain to initialize internal dope vectors	UA003	UA300, UA320, UA340, UA360, UA365
Initializes dope vectors for internal strings	UA300	RLDMOV (UB), TXTMOV (UB)
Initializes dope vectors for internal data arrays	UA320	RLDMOV (UB), TXTMOV (UB)
Initializes dope vectors for arrays of varying strings	UA340	TXTMOV (UB), UCUPDT (UC)
Initializes dope vectors for internal label arrays	UA360	RLDMOV (UB), TXTMOV (UB)
Initializes dope vectors for internal structures	UA365	UA300, UA320, UA360
Initializes arrays	UA030	RLDMOV (UB), TXTMOV (UB), UCINIT (UC)
Initializes structures	UA040	TXTMOV (UB), UA200, UC0800 (UC), TIDY (UC)
Initializes one word CSECT 'IHEMAIN'	UA100	OUTPUT, RLDMOV, TXTMOV (all in UB)
Initializes CSECT for STATIC external variables	UA1005	OUTPUT (UB), UA030, UA200, UA300, UA320, UA360, UA365, UA401, UA406
Makes up END card and terminates phase	UA120	OUTPUT (UB)
Initializes array variables	UCINIT (UC)	TXTMOV (UB), UC0080 (UC), TIDY (UC)

Table UE1. Phase UE Routine/Subroutine Directory

Routine/Subroutine	Function
AREA	Initializes AREA variables.
EVENT	Initializes EVENT variables.
TASK	Initilizes TASK variables.
UA000	Entry point from UA and compiler control.
UA001	Scans STATIC chain to start of external section, to initialize scalar variables.
UA0015	Return point for branches taken in first scan.
UA003	Scans STATIC chain to initialize all dope vectors for internal variables.
UA021	Start of scan for arrays and structures.
UA030	Initializes arrays.
UA031	Produces RLD entry for label array virtual origin.
UA033	Return point for branches taken in array scan.
UA034	Produces RLD entry for data array virtual origin.
UA040	Initializes structures.
UA100 (UC)	Initializes IHEMAIN CSECT.
UA105	Return point for branches taken in external scan.
UA120	Makes up END card and terminates phase.
UA200	Initializes scalar variables.
UA207	Lists label variables.
UA300	Initializes dope vectors for internal strings.
UA320	Initializes dope vectors for internal data arrays.
UA340	Initializes dope vectors for arrays of varying strings.
UA360	Initializes dope vectors for internal label arrays.
UA365	Initializes dope vectors for internal structures.
UA401	Initializes address slots for functions and programmer-defined ON-condition names.
UA406	Initializes DECLARE control blocks for files and file attributes entries
UA1005	Initializes CSECTs for STATIC external variables.

Table UF. Phase UF Final Assembly Object Listing

Statement or Operation Type	Main Processing Routine	Subroutines Used
Scans Text	IL0002	None
Lists RR instructions	IL0012	PRINIT, RRRTN
Lists RX non-branch instructions	IL0013	BXRTN, PRINIT, PRNTOU, PRNTVF, SECOND
Lists SS instructions	IL0014	EOBRTN, PRINIT, PRNTOU, SSRTN
Lists shift instructions	IL0026	PRINIT, PRNTOU, PRNTVF
Lists LM and STM	IL0027	PRINIT, PRNTOU, PRNTVF, SECOND
Lists SI instructions	IL0028	CHARVF, PRINIT, PRNTOU, PRNTVF SECOND, SSRTN
Lists branch and load address instructions	IL0020	IL0013, NAMEIT, NAMEQU, PRINIT, RRRTN
Lists labels	IL0019	NAMEVF, NEXTEL, NEXTSL, PRNTLC, PRNTOU, PRNTVF, STATMN
Lists procedure names	IL0010	NAMEVF, NEXTEL, PRNTOU, STATMN
Lists ends of procedures	IL0011	NAMEVF, NEXTEL, PRNTOU
Scans ahead for literal offsets; inserts second instruction byte into print image	SECOND	EOBRTN
Generates listing of text for base offset pair	SSRTN, BXRTN	ABSOFF, ADDEND, NAMEIT, NAMEQU, PRNTVF
Names generated label number	NAMEQU	DECINT, FINEQ1
Inserts location counter value, and hexadecimal and mnemonic operation codes in print line	PRINIT	PRNTLC
Moves variable length item into variable field part of print line	PRNTVF	PRNTOU
Lists statement numbers	STATMN	STATNO
Determines name and offset from dictionary reference	NAMEIT	DECINT, HEXINT
Generate listing of compiler subroutine	IL0017	PRNTLC,PRNTVF,PRNTOU

Table UF1. Phase UF Routine/Subroutine Directory

Routine/Subroutine	Function
ABSOFF	Appends literal offsets to operands in variable part of print line.
ADDEND	Appends signed literal offsets to operands.
BXRTN/SSRTN	Generate listing of text for base offset pair.
CHARVF (UG)	Places one character in variable field of print line image.
DECINT (UG)	Converts binary to externally coded decimal.
EOBRTN	Chains to next input block.
FINEQ1	Locates label number table entries.
HEXINT (UG)	Converts binary to externally coded hexadecimal.
IL0000	Entry point from compiler control.
IL0002	Scans text.
IL0003	Entry to scan from initialization routines.
IL0010 (UG)	Lists procedure names.
IL0011 (UG)	Lists ends of procedures.
IL0012	Lists RR instructions.
IL0013	Lists RX non-branch instructions.
IL0014	Lists SS instructions.
IL0015	Processes the start of prologues.
IL0016	Processes the end of prologues.
IL0017 (UI)	End-of-text routine, and compiler subroutine listing.
IL0018	Processes compiler generated label numbers.
IL0019 (UG)	Lists labels.
IL0020	Lists branch and load address instructions.
IL0026	Lists shift instructions.
IL0027	Lists LM and STM.
IL0028	Lists SI instructions.
IL0032	Processes SS decimal instructions.
IL1003 (UG)	Prints "*PROCEDURE" followed by entry names and statement number.
IL2005	Identifies operands.
NAMEIT	Determines name and offset from dictionary entry.
NAMEQU	Names generated label number.
NAMEVF (UG)	Places a variable name in the print line.
NEXTEL (UG)	Scans dictionary for multiple entry labels.

Table UF1. Phase UF Routine/Subroutine Directory (cont'd)

Routine/Subroutine	Function
NEXTSL (UG)	Scans dictionary for multiple statement labels.
NM0003 (UH)	Common return point in naming routine.
PRINIT (UG)	Prints location counter value, hexadecimal, and mnemonic op codes.
PRNTLC (UG)	Converts location counter to hexadecimal; places it in print image.
PRNTOU (UG)	Prints a line.
PRNTVF (UG)	Moves variable length item into variable field part of print line.
RRRTN	Generates RR format listing of text.
SECOND	Scans ahead for literal offsets; inserts second instruction byte into print image.
STATMN (UG)	Lists statement numbers.
STATNO (UG)	Converts statement number to decimal.

Table XA. Phase XA Error Message Editor

Statement or Operation Type	Main Processing Routine	Subroutines Used
Determines whether error messages are to be printed	XA	None
Scans error message text skeletons and prints them out	XA8	XA50, XA70, XA90, XA110, ZUPL

Table XA1. Phase XA Routine/Subroutine directory

Routine/Subroutine	Function
XA	Determines whether error messages are to be printed.
XA0	Sets severity code.
XA01	Establishes which message types to suppress.
XA1	Counts number of error chains to be processed.
XA2	Puts out messages if there are no diagnostics.
XA4	Prints out "COMPILER DIAGNOSTIC MESSAGES".
XA7	First scan of message chains.
XA8	Scans error message text skeletons and prints them.
XA9 (XB)	Scans to head of next non-empty chain.
XA12A	Selects and prints header for messages of given severity.
XA30 (XB)	Gets next entry in message chain.
XA32 (XB)	Builds up first part of message in buffer.
XA35 (XB)	Accesses message skeleton.
XA40 (XB)	Puts out completed message.
XA50 (XB)	Moves message text to print buffer.
XA70 (XB)	Converts binary statement number to character representation, and moves it to print buffer.
XA90 (XB)	Converts binary numeric value to character representation and moves it to print buffer.
XA110 (XB)	Moves identifier from dictionary entry to the print area.
ZUPL	Prints a line on SYSPRINT data set.

This appendix relates the logical phases, physical phases, and modules contained within the physical phases. The compiler name is IEMAA.

PHYSICAL PHASE	MODULES	DESCRIPTION
Compiler Control		
	AA	Controls running of compiler
	AB	Performs detailed initialization
	AC	Writes records on intermediate file SYSUT3
	AD	Performs inter-phase dumping as specified in the DUMP option
	AE	End of read-in phase
	AF	Controls system generation compiler options
	AG	Closes SYSUT3 for output, reopens for input
	AH	Format annotated dictionary dump
	AI,AJ	Format annotated text dump
	AK	Closing phase of compiler
	AL	Controls extended dictionary compilation
	AM	Phase marking
	AN	Controls normal dictionary compilation
	AT	Carries out extra debugging during compiler runs
	BX	48-character set preprocessor
	F1	Checks whether Syntax Check should terminate compilation
	JZ	Builds second half phase directory
Compile-time Processor Logical Phase		
	AS	Resident phase for compile-time processor
	AV	Initialization phase for compile-time processor
BC	BC,BE,BF	Initial scan and translation phase for compile-time processor
BG	BG,BI,BJ	Final scan and replacement phase for compile-time processor
BM	BM,BN	Error message printout phase
	BO,BV	Contain the diagnostic messages
BW		Cleanup phase for compile-time processor
Read-In Logical Phase		
	CA	Read-In phase common routines
	CC	Read-In phase common routines
	CE	Keyword tables
CI	CG,CI	Read-In first pass
	CK	Keyword tables
CL	CL,CM	Read-In second pass
	CN	Keyword tables
CO	CO,CP	Read-In third pass
	CR	Keyword tables
CS	CS,CT	Read-In fourth pass
CV	CV,CW	Read-In fifth pass
Dictionary Logical Phase		
ED	ED	Initialization, subroutine package for Declare Pass 2
EG	EF,EG	Initialization

PHYSICAL PHASE	MODULES	DESCRIPTION
EI	EH,EI,EJ	First pass over DECLARE statements
EL	EK,EL,EM	Second pass over DECLARE statements
EP	EP	Constructs dictionary entries for PROCEDURE, ENTRY and CALL statements
EW	EV,EW	Constructs dictionary entries for LIKE attributes
EY	EX,EY,EZ	Constructs dictionary entries for ALLOCATE and for explicitly qualified based variables.
FA	FA,FB	Checks context of source text
FE	FE,FF	Changes BCD to dictionary references
FI	FI	Checks validity of dictionary references
FK	FK	Rearranges attributes
FO	FO,FP	Constructs dictionary entries for ON-conditions
FQ	FQ	Checks validity of PICTURE chain for PL/I functions and the TRANSLATE and VERIFY functions
FT	FT,FU	Dictionary house-keeping
FV	FV,FW	Merges second file statements into text
FX	FX,FY,FZ	Processes identifiers for cross reference and attribute listing
Pretranslator Logical Phase		
GA	GA	Constructs DECLARE and OPEN control blocks
GB	GB,GC	Modifies I/O statements
GK	GK	Checks parameter matching
GO	GO	Preprocessor for second check on parameters
GP	GP,GQ,GR	Second check on parameters
GU	GU,GV	Processes CHECK condition statements
HF	HF,HG	Processes structure assignments
HK	HK,HL	Processes array assignments
HP	HP	Processes items defined using iSUBs
Translator Logical Phase		
IA	IA,IB,IC	Stacks operators and operands
IG	IG	Processes array and structure arguments and built-in functions
IK	IK	First part of preprocessor for generic functions
IL	IL	Second part of preprocessor for generic functions
IM	IM,IN,IP, IQ	Processes generic functions
IT		Processes function triples
IX	IX	POINTER and AREA checking
JD	JD	Evaluates constant expressions
Aggregates Logical Phase		
JI	JI,JJ	Structure pre-preprocessor
JI	JI,JK,JL	Structure preprocessor
JK	JK,JL,JM	Structure processor
JP	JP	Checks DEFINED chains
Optimization Logical Phase		
KA	KA,KB	Table handling and initialization
KC	KC,KC1	DO temporaries

PHYSICAL PHASE	MODULES	DESCRIPTION
KE	KE,KE1	DO MAP build
KG	KG,KG1	DO examine
KJ	KJ	SUBS TABLE build
KN	KN	Initialization
KO	KO,KP,KQ	Subscript optimization 1 and 2
KT	KT	SCAN utility
KU	KU,KV	Merge patches and loop control
Pseudo-Code Logical Phase		
LB	LB,LC	Generates triples to initialize AUTOMATIC and CONTROLLED scalar variables
LD	LD	Constructs dictionary entries for initialized STATIC scalar variables and arrays
LG	LG,LH	Expands DO loops
LR	LR	Fixed decimal expression optimization and initialization for phase LS
LS	LS,LT,LU	Converts expression triples to pseudo-code
LV	LV	Provides string handling facilities
LW	LW	Initialization for phase LX
LX	LX,LY	Converts string triples to pseudo-code
MA	MA	Constructs pseudo-code for functions
MB	MB,MC	Constructs pseudo-code for pseudo-variables
MD	MD	Scans for ADDR and STRING functions and generates code for each
ME	ME	Constructs pseudo-code for in-line functions
MG	MG,MH	Constructs pseudo-code for in-line functions
MI	MI,MJ	Constructs pseudo-code for in-line functions
MK	MK	Constructs pseudo-code for in-line functions
ML	ML	Processes generic entry names
MM	MM,MN,MO	Processes CALL and function procedure invocations
MP	MP	Reorders BUY and SELL statements
MS	MS,MT	Constructs pseudo-code for subscripts
NA	NA	Generates pseudo-code for branches, RETURN triples, etc.
NG	NG	Generates Library calling sequences for DELAY and DISPLAY statements
NJ	NJ,NK	Generates Library calling sequences for executable RECORD-oriented input/output statements
NM	NM,NN	Generates Library calling sequences for executable STREAM-oriented input/output statements
NT	NT	Pre-processor for NU
NU	NU,NV	Generates Library calling sequences for data/format lists
OB	OB,OC	Processes compiler functions and pseudo-variables
OD		Pseudo-code assignment
OE	OD,OE,OF	Constructs Pseudo-code for assignments
OG	OG,OH,OL, OI	Generates library calling sequences
OM	OM,ON,OO	Generates pseudo-code for data type conversions in-line
OP	OP,OQ	Generates pseudo-code for further in-line conversions
OS	OS,OT,OU	Converts constants to required internal form

PHYSICAL PHASE	MODULES	DESCRIPTION
Storage Allocation Logical Phase		
PA	PA	Puts eligible DSA's into STATIC
PD	PD	First STATIC storage allocation phase
PH	PH	Second STATIC storage allocation phase
PL	PL,PM	Constructs symbol tables and DEDs
PP	PP,PO	Sorts AUTOMATIC chain
PT	PT,PU,PV	Allocates AUTOMATIC storage
QF	QF,QG,QH	Constructs prologues
QJ	QJ,QK,QL	Allocates DYNAMIC storage
QU	QU	Aligns misaligned operands and processes halfword binary operands
QX	QX	Lists lengths of aggregates
Register Allocation Logical Phase		
RA	RA,RB,RC	Processes addressing mechanisms
RD	RD	Flags branches for optimization
RF	RF,RG,RH	Allocates physical registers
Final Assembly Logical Phase		
TF	TF	Assembly first pass
TJ	TJ,TK	Optimization
TO	TO,TP,TQ	Produces ESD cards
TT	TT,TU	Assembly second pass
UA	UA,UB,UC	Final assembly initial values, first pass
UD	UD,UB,UC	Generates RLD and TXT cards to set up dope vectors for STATIC DSAs
UE	UE,UB,UC	Final assembly initial values, second pass
UF	UF,UG,UH	Produces listings
UI	UI,UG,UH	Completes final assembly listings
Error Editor		
XA	XA	Determines whether there are diagnostic messages to be printed
	XA,XB	Constructs the third phase list
	XA,XC	Controls the printing of messages
	XF	Message address blocks
	XG,YY	Contain the diagnostic messages

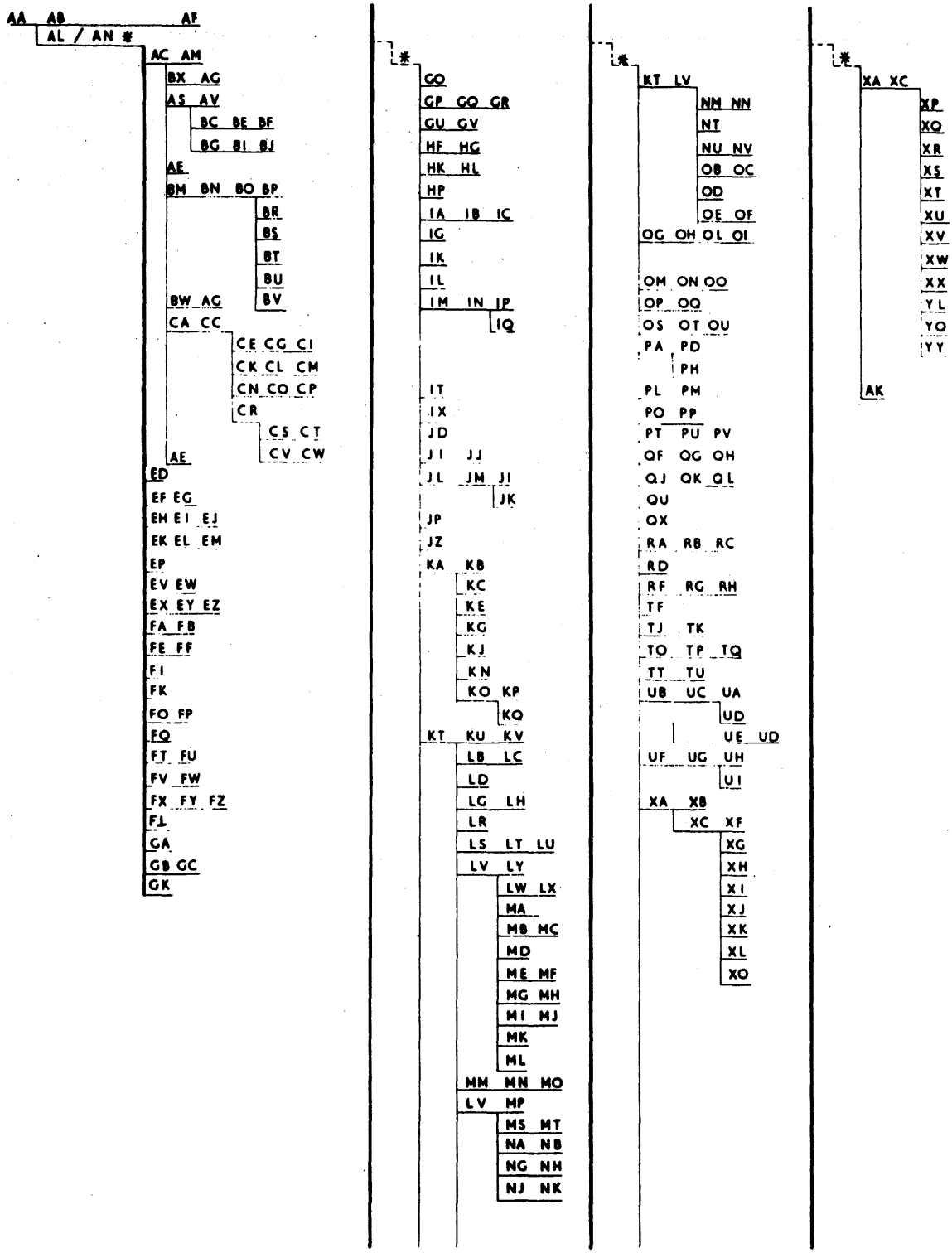

* REPRESENTS COMPILER DEBUGGING ROUTINES, AD, AH, AI, AJ OR AT, WHICH MAY BE IN PERMANENT RESIDENCE IF REQUESTED

● Figure 7. PL/I Phase-in-Storage Map

In this phase-in-storage map, modules on the same horizontal line may be in storage together. Modules on the same vertical line can never be in storage together.

This map represents the 'worst' case, and does not always reflect the order of loading.

APPENDIX B: RESIDENT TABLES

There are three resident tables: the dictionary, the keyword tables, and the phase directory. The dictionary is resident through part of the compilation; the formats of the dictionary entries are fully described in Appendix C. The keyword tables are resident during the read-in logical phase, and the phase directory throughout the compilation.

ORGANIZATION OF KEYWORD TABLES

The read-in phase is divided into five passes containing the modules shown in Figure 8.

Modules CA and CC contain routines which are common to all five passes. Successive blocks of routines overlay the areas used in the first pass by modules CE, CG, and CI. The keyword tables are held in separate modules (CE, CK, CN, and CR) which must each be less than 1,024 bytes (1K) long. In this way it is possible to hold in storage only those keywords which are required for any one pass. The keyword tables are constructed in the following manner.

For ease of searching and modifying a keyword table, it is organized into two levels and by keyword length, as shown in Figure 9.

The KEYWD routine is called by one of the statement scanning routines, and is supplied with a parameter which enables it to decide which set of keywords to look at (e.g., statement identifier, ON condition, miscellaneous). It does this by using the parameter to extract the required relative address (R(A),etc.) from the first level directory. The second level directory provides the KEYWD routine with the means of reaching a table containing keywords of correct length; the KEYWD routine calls the KEYID routine, which scans the next significant item in the source text to obtain the length used in this look-up.

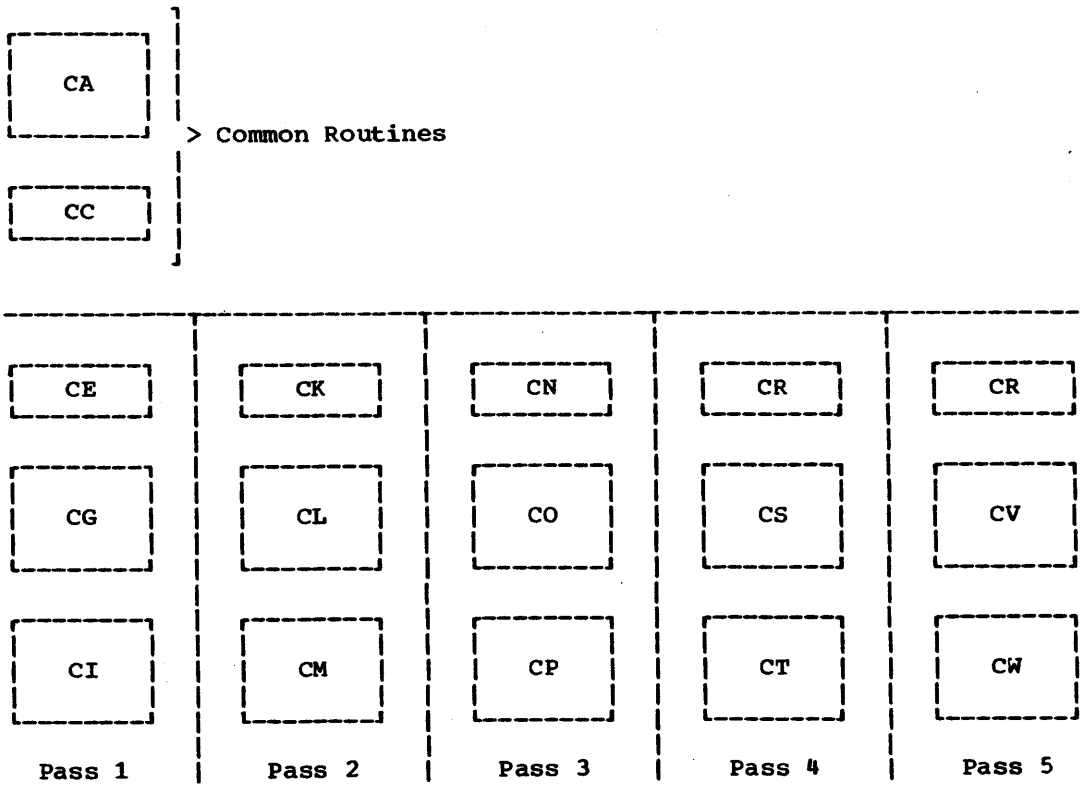

Figure 8. Organization of Read-In Phase

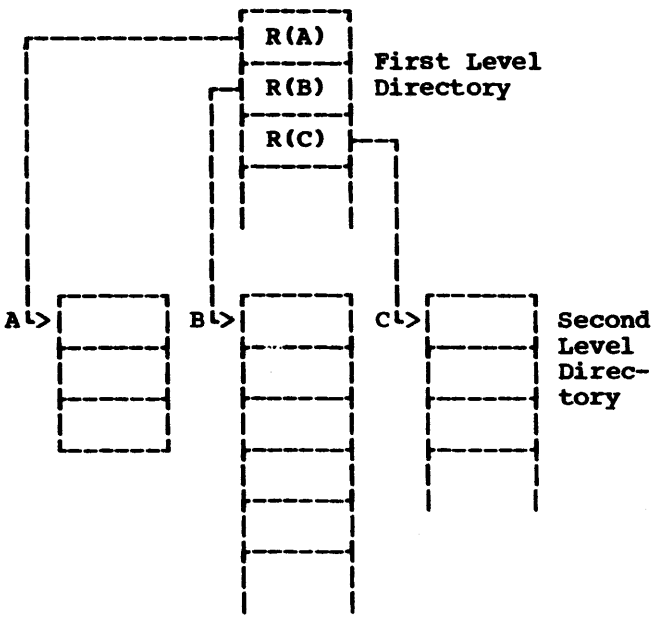

Figure 9. Organization of Keyword Table

Format of First Level Directory

```
FSTLVL DC AL2(STATID - FSTLVL)
       DC AL2(ONID - FSTLVL)
```

Format of Second Level Directory

The second level tables contain relative addresses, which enable the KEYWD routine to reference a third level table containing keywords of the correct length. If one of these entries should contain zero, then KEYWD will interpret this as meaning that no keywords of this length exist in this table.

```
STATID DC FL2'm' where m is smallest
          length in table
       DC FL2'n' where n is largest
          length in table
       DC AL2(STLm-STATID)
       DC AL2(STLn-STATID) where the
          symbols beginning STL are
          the symbolic addresses of
          the corresponding keyword
          tables
```

Format of Third Level Tables

The third level tables have a prefix byte containing the number of entries in this particular table followed by keyword entries. These consist of the keyword in internal code plus the replacement character (keywords recognised as such are replaced by a single code byte).

```
STLm DC FL1'x' where x is number of
        keywords in this table
     DC X'112315' keyword in internal
        code
     DC X'55' replacement in internal
        code
     DC X'393839'
     DC X'5A'
```

Some keywords are not represented by one word (e.g., GO TO, BY NAME) and clearly, the mechanism must be modified to cope with the second word. This modification is achieved by placing a 1-bit into the first bit of the first level by using the OR logical operation. The presence or absence of this bit is tested by the KEYWD routine before the suspected keyword is compared. If the bit is absent, the pass through the routine is quick, as there is no possibility of an extra level search. If the bit is present, the keyword must be compared after the additional bit has been removed by the AND logical operation. If the comparison is equal, the two bytes following the replacement character are used as a relative address to reach the next level table.

Format of Entry Requiring Additional Comparisons

```
       DC X'9726' GO + X'1000'
       DC X'40'
       DC AL2(N XTLVL-*) Relative address
          of next level table
```

The format of these extra level tables is similar to that for the third level. In this way, it is possible for national language keywords to replace single words by two or more words, if so desired.

PHASE DIRECTORY

Because of the number of phases in the compiler, the phase directory is split into halves. The first half is constructed during the initialization of the compiler; also a list of names of the phases in the second half is kept in Phase AA. This list is used to pass status indications (i.e., whether phases are wanted or not wanted) from the first half to the second half. Phase JZ uses the list to construct a new directory for the second half.

The phase directory is constructed by use of the BLDL macro and a build list. The format of the build list is fully described in the publication IBM System/360 Operating System, Supervisor and Data Management Services.

Each entry in the build list is 30 bytes long. On returning from the BLDL macro, two bytes of the name field and ten other bytes of each satisfied entry in the build list are used to construct a 12-byte phase directory entry in the compiler control routines. The build list is destroyed after the initialization process is complete.

The format of a phase directory entry is as follows:

Byte Number	Description
0 - 1	Phase name
2	Status byte
3 - 4	Concatenation number and library identification
5 - 7	TTR of first text record; where TT is the relative track number, and R is the block number on that track. After the phase is loaded, these bytes contain the absolute address of the begining of the phase.
8 - 9	Total amount of storage required
10 - 11	Length of first text record

This appendix describes the formats of dictionary entries during the compilation of a source program. The appendix is organized in the following manner:

1. Dictionary Entry Code Bytes
2. Dictionary Entries for ENTRY Points
3. Code Bytes for ENTRY Dictionary Entries
4. Dictionary Entries for DATA, LABEL, and STRUCTURE Items
5. Code Bytes for DATA, LABEL, and STRUCTURE Dictionary Entries
6. Format of Variable Information
7. Other Dictionary Entries
8. Dimension table
9. Dictionary Entries for Initial Values

1. DICTIONARY ENTRY CODE BYTES

The dictionary is used to communicate a complete description of every element of the source program, the compiled object program, and the compiler diagnostic messages between phases of the compiler; the text describes the operations to be carried out on the elements.

Each type of element has a characteristic dictionary entry, which is identified by a code occupying the first byte of the entry. In general, each type of element has a different code byte, but in order to permit rapid identification of dictionary entries, the code bytes have been allocated on the following basis:

First Half Byte

Bit Position	Bit Value	Meaning
0	0	entry has BCD
	1	entry has no BCD
1*	0	entry is to be chained
	1	entry not to be chained
2	0	not a member of structure
	1	member of structure
3	0	not dimensioned
	1	dimensioned

*This bit only applies to Phase FT which constructs the storage class chains by a sequential scan of the dictionary; later in the compiler, items with this bit on are added to the storage class chains.

Second Half Byte

In the second half byte, the following codes have the meanings shown, unless the first half byte is X'C':

X'7' means label variable
X'C' means task identifier
X'D' means event variable
X'E' means structure
X'F' means data variable

The second and third bytes of every dictionary entry contain the length, in bytes, of the entry. If the entry has BCD (i.e., the first bit of the entry is zero), this length count does not include the BCD; instead, the BCD, which follows the main body of the entry, is preceded by a single byte containing one less than the number of characters of BCD.

Using this general scheme, the code bytes allocated for dictionary entries appear in the following table. Code bytes in the table which have no corresponding description are not allocated.

X'00' Statement label constant
01 Procedure or entry label
02 GENERIC entry label
03 External entry label (entry type 4)
04 Built-in function, e.g., DATE
05 Temporary variable and controlled allocation workspace
06 Built-in GENERIC label, e.g., SIN
07 Label variable
08 File constant
09

0A
0B
0C Task identifier
0D Event variable
0E
0F Data variables (not dimensioned or a structure member)

10
11
12
13
14
15
16
17 Dimensioned label variable
18
19
1A
1B
1C Dimensioned task identifier
1D Dimensioned event variable
1E
1F Dimensioned data variable

20
21
22
23
24
25
26
27 Label variable in structure
28
29
2A
2B
2C Task identifier in structure
2D Event variable in structure
2E Structure item
2F Data variable in structure

30
31
32
33
34
35
36
37 Dimensioned and structured label variable
38
39
3A
3B
3C Dimensioned task identifier in structure
3D Dimensioned event variable in structure
3E Dimensioned structure item
3F Dimensioned and structured data variable

40 Formal parameter type 1
41
42
43
44
45
46
47
48
49
4A
4B
4C
4D ON CONDITION entry
4E
4F

80 ENTRY type 1 -- from a PROCEDURE statement
81 BEGIN statement entries -- entry type 1
82 ENTRY statement -- entry type 1
83 Entry type 5
84 Entry type 3
85 Entry type 2
86 Entry type 6
87 Label variable formal parameter or temporary
88 Constant
89 File formal parameter or file temporary
8A
8B
8C Task identifier formal parameter
8D Event variable formal parameter
8E
8F Data variable formal parameter or temporary

90 Invocation count dictionary entry
91
92
93
94
95
96
97 Dimensioned variable formal parameter or temporary
98 File attribute entry
99
9A
9B
9C Dimensioned task identifier formal parameter
9D Dimensioned event variable formal parameter
9E
9F Dimensioned data variable formal parameter or dimensioned temporary

A0
A1
A2
A3
A4
A5
A6
A7 Structured label variable temporary
A8
A9
AA
AB
AC Structured task identifier temporary

AD	Structured event variable temporary
AE	Temporary or formal parameter structure
AF	Structured data variable temporary
B0	
B1	
B2	
B3	
B4	
B5	
B6	
B7	Dimensioned and structured label variable temporary
B8	
B9	
BA	
BB	
BC	Dimensioned and structured task identifier temporary
BD	Dimensioned and structured event variable temporary
BE	Dimensioned structure formal parameter or temporary
BF	Dimensioned and structured data variable temporary
C0	String dope vector for temporary
C1	DED2 entry
C2	Internal library function, e.g., conversion routines
C3	Compiler label
C4	Prefix ON list item
C5	Parameter lists
C6	Dope vector skeletons
C7	Symbol table entry or DED entry
C8	Error message, table entry, workspace requirement, STATIC DSA, etc.
C9	Record dope vector (RDV) entry
CA	Workspace requirement entry
CB	Select a member from a generic family
CC	AUTOMATIC chain delimiter or Dope Vector Descriptor (DVD) entry
CD	ON condition entry
CE	Label BCD entry
CF	End of information in dictionary block

2. DICTIONARY ENTRIES FOR ENTRY POINTS

Entry type 1 for PROCEDURE, BEGIN, and ENTRY statements

The format of an entry for a PROCEDURE statement is as follows:

Byte Number	Description
1	Code byte X'80'
2-3	Length
4	Level
5	Count
6-7	Dictionary reference to the entry type 1 of the containing block
8-9	Dictionary reference of the dictionary entry for the first label that was attached to the PROCEDURE statement
10-11	Dictionary reference to the entry type 1 of the next PROCEDURE or BEGIN statement in the source program
12-13	The start of the chain of all AUTOMATIC variables
14-15 16-17 18-19	Dictionary references to three dictionary entries indicating storage requirements for workspace
20-21	Dictionary reference of CHECK list set by phase FO. Phase QU re-uses this slot and sets it to the offset from register 9, at which the register allocator workspace is to start.
22-23	Dictionary reference of NOCHECK list
24-25	Dictionary reference of the first symbol table entry for this block
26-28	Size of the DSA for this block, set in storage allocator phase Note: Phase MA moves, into bytes 27 and 28, the dictionary reference of a temporary describing a table to be built at execution time for the TRANSLATE or VERIFY function.
29-31	Offset of the eight words in the DSA used for addressing the DSA
32-34	Offset of the storage used for the parameter list necessary in an ALLOCATE-FREE statement
35-37	Offset of the two-byte switch which is set on entry to a procedure and tested at a RETURN (expression)
38-40	Offset of the four-byte slot

	which will contain the address of the first approximation of the target field (the address of the implied parameter)
41-42	Dictionary reference of the entry type 1 of the first ENTRY statement of the procedure. The entry type 1 for PROCEDURE and ENTRY statements of any one procedure form a circular chain. If there are no ENTRY statements in a procedure this slot will contain the dictionary reference of the PROCEDURE's entry type 1, i.e., of the entry in which the slot occurs
43	OPTIONS code byte
44-57	Eight 2-byte dictionary references to dictionary entries for prefix options. Only those prefix options which are changed within the procedure have a dictionary reference. The remainder are zero. The order of the options in this list is the same as in the options byte. (See "Options Code Byte" in Section 3 below)
60	Options change byte. This byte contains a one bit for each prefix option which is changed within the procedure. Its format is identical with the normal options byte
61-63	Offset of workspace used in BUY statement
64	Optimization byte
65	2*n where n is the number of parameters at this entry point
66 onwards	N dictionary references of formal parameter type 1 entries

The format of an entry for a BEGIN statement is similar to the above for the first 34 bytes. The initial code byte is X'81', and the dictionary reference in bytes 8 and 9 is that of the first label on the original BEGIN statement, if any. If there was no statement label, then the statement number occupies this slot. The presence of a statement number or statement label is indicated by a flag byte in position 35. This is set to SN for a statement number, or to SL for a statement label. Bytes 36-56 contain the same as bytes 44-64 in a PROCEDURE entry type 1.

The format for the entry type 1 derived from an ENTRY statement is as follows:

Byte Number	Description
1	Code byte X'82'
2-3	Length
4	Level
5	Count
6-7	Dictionary reference of the next member in the circular PROCEDURE-ENTRY chain
8-9	Dictionary reference of the dictionary entry for the first label on the original ENTRY statement
10-12	The offset of the apparent entry point
13	2*n where n is the number of parameters
14 onwards	n dictionary references to the formal parameter type 1 entries

The labels on a PROCEDURE or ENTRY statement will be placed in the dictionary according to the following format:

Byte Number	Description
1	Code byte X'01'
2-3	Length
4-5	Hash chain(STATIC chain)
6-8	Pointer to transfer vector
9-10	Statement number. If the label is mentioned in an ON CHECK list, this slot contains the dictionary reference of Label BCD Entry (X'CE'), which has the statement number in bytes 4 and 5
11	Other 1 code byte. (See "First code byte - other 1" in Section 5 below.) The last bit will always be set to one, unless the label is the last label for a particular statement, in which case the last bit will be set to zero.

12-13	Pointer to entry type 2
14-16	Spare bytes for final assembly. The pseudo-code phase dealing with RETURN (expression) will insert into these bytes a code which must be stored in a specific slot in the DSA whenever the procedure is entered via this label. The code is used by the prologue construction phase. Byte 16 in the first label for each PROCEDURE or ENTRY statement will contain the number of labels associated with that statement
17	Block level
18	Block count
19	Count of containing block
20	BCD length-1
21	BCD of label

Entry Type 2

An entry type 2 describes the data attributes of an entry point. The format is as follows:

Byte Number	Description
1	Code byte X'85'.
2-3	Length.
4-5	Dictionary reference of entry type 3
6-8	Offset, i.e., the position of the string dope vector in the DSA of the block to which the entry belongs. This will be zero if the item is not a string.
9	DATA byte (see "DATA Byte" in Section 5 below).
10-12	Data information, which is: 1. with numeric data, the precision and scaling, left justified 2. for strings of fixed maximum length, the binary version of the string length in the two leftmost bytes of the data information 3. for strings of adjustable length, the text reference of a second file statement giving the expression for the string length
13-14	Picture table reference, if required. The storage allocation phase will change this to the dictionary reference of a DED entry, the picture table reference being moved into this reference if necessary

Entry Type 3

Entry type 3 dictionary entries are constructed either from an explicit declaration or from implicit and default rules. Their format is as follows:

Byte Number	Description
1	Code byte X'84'
2-3	Length of entry.
4-5	Dictionary reference of entry type 1 of PROCEDURE or ENTRY statement.
6-7	Dictionary reference of entry type 2. This describes the value returned when the label associated with this entry type 3 is invoked as a function.
8-10	The offset in the DSA of the containing block of the first approximation of the storage for the value returned by this entry point, when it is invoked as a function.
11	The entry code byte. (See "Entry Code Byte" in Section 3 below)
12-13	The dictionary reference of an item in the AUTOMATIC chain of the containing block. Entry type 3 entries feature in the AUTOMATIC chain of the containing block.
14-15	Switch bytes. The pseudo-code phase dealing with RETURN (expression) inserts into these bytes the bit pattern of the code which

	will signify that entry to the procedure was by the label associated with this particular entry type 3. Phase QF will use this to create MVI instructions.
16-17	Dictionary reference of a SETS list. This will be zero if the attribute SETS was not specified. The format of a SETS list is given at the end of this section.
18-19	Dictionary reference of the dictionary entry for the label belonging to this entry type 3.
20	Status byte. This byte will contain X'00' or X'F0'. X'00' indicates that the entry was constructed from an ENTRY declaration which had parameter descriptions. X'F0' indicates the entry was constructed either artificially or from an ENTRY declaration which did not have parameter descriptions.
21	2*n where n is the number of parameters. This is zero if the status byte is X'FF'
22 onwards	If the status byte is X'00' there are n two-byte references of parameter descriptions. A parameter description is a dictionary entry for the particular type of item but without a BCD. If one particular parameter is not described, i.e. if there are two adjacent commas in the ENTRY attribute, then the dictionary reference is zero. When the status byte is X'F0' then an entry type 3 is only 23 bytes long.
22+2n-23+2n	DECLARE statement number

SETS List Format

Byte Number	Description
1	Code byte X'C8'
2-3	Overall length of original BCD entry
4-5	2*n1 where n1 is the number of identifiers in the SETS list. If * was specified, these bytes contain 2*n1+1.
6-5+2*n1	Dictionary references of the identifiers in the SETS list.
6+2*n1	n2, the number of parameters in the SETS list.
7+2*n1 onwards	n2 numbers of one byte each. These are the parameter numbers and will be in ascending order.

Entry Type 4

Entry type 4 dictionary entries describe external entry points. Their format is as follows:

Byte Number	Description
1	Code byte X'03'
2-3	Length
4-5	Hash chain, later used as the STATIC chain
6-8	Offset of the load constant in STATIC
9-11	Offset in the DSA of the declaration block of the storage for the first approximation of the value returned.
12-13	The dictionary reference of an item in the AUTOMATIC chain of the declaring block. Entry type 4 entries are members of the AUTOMATIC chain of the declaring block.
14	The Entry code byte. (See "ENTRY Code Byte" in Section 3 below).
15	The DATA byte. (See "DATA Byte" in Section 5 below)
16-18	Data information which is: a) with numeric data, the precision and scaling, left justified b) for strings of fixed maximum length, the binary version of the string length in the two leftmost bytes of the

	data information c) for strings of adjustable length, the text reference of a second file statement giving the expression for the string length
19-20	Picture table address if required.
21-22	Dictionary reference of a SETS list
23	Status byte. If this byte is X'00' the meaning is the same as the status byte in an entry type 3. If the byte is X'FF' it is implied that no parameters were described
24	2*n where n is the number of parameters. This is zero if the status byte is X'FF'
25	n dictionary references to parameter descriptions as in an entry type 3
25+2*n	Level
26+2*n	Count
27+2*n	BCD length-1
28+2*n onwards	BCD of identifier

Entry Type 5

Entry type 5 dictionary entries describe the entry points which are formal parameters. They have the same format as entry type 4 except that:

Byte 1 is X'83'

Bytes 4 and 5 contain the address of the formal parameter type 1 entry

Bytes 6 to 8 contain the offset in the DSA of the declaring block of the address slot associated with a formal parameter

No BCD is contained in the entry

GENERIC Entry Point

The format for a GENERIC entry point is as follows:

Byte Number	Description
1	Code byte X'02'
2-3	Length
4-5	Hash chain
6-8	Offset 1 Slot
9-10	DECLARE statement number
11	2n, where n is the number of two-byte addresses following
12-11+2n	Pointers to entry type 4 or 5, ENTRY labels, or BUILTIN entries. These entries are made when an identifier is given the attribute GENERIC. The pointers are to the entries which contain specifications of the various possible attributes
12+2n	Level
13+2n	Count
14+2n	BCD length-1
15+2n onwards	BCD

3. CODE BYTES FOR ENTRY DICTIONARY ENTRIES

ENTRY Code Byte

This code byte is used in entry type 3, 4, and 5 dictionary entries. The format is as follows:

Bit Number	Description
0	IRREDUCIBLE
1	REDUCIBLE
2	USES
3	SETS
4	SECONDARY
5	RECURSIVE

6	Has data attribute
7	Not used

Options Code Byte

This code is used in entry type 1 dictionary entries for PROCEDURE statements. The format is as follows:

Bit Number	Description
0	REENTRANT
1	ON Block
2	MAIN
3	TASK
4	RECURSIVE
5	OPTIONS
6	Contains RETURN (expression) statement
7	ENTRY name is passed as argument

Optimization Byte

This code byte is used in entry type 1 dictionary entries.

Format of the Optimzation Byte:

Bit Number	Description
0	Not eligible for DSA in library workspace.
1	Fligible for DSA in STATIC storage.
2	Needs invocation count.
3	Needs current file slot.
4	Contains asynchronous CALL.
5	Indicates ORDER or REORDER option 0 = ORDER, 1 = REORDER. Default is ORDER
6	Not used.
7	Not used.

4. DICTIONARY ENTRIES FOR DATA, LABEL, AND STRUCTURE ITEMS

Label Variables - Obtained from DECLARE Statement

Byte Number	Description
1	Code byte may be X'07', X'17', X'27', X'37', X'87', X'97', X'A7', X'B7'. The last four cases apply when the item occurred in a parameter list in a PROCEDURE or ENTRY statement. In this case, bytes 4 and 5 will contain the dictionary reference of the corresponding formal parameter type 1 entry. In the first four cases, bytes 4 and 5 initially contain the hash chain. After the scan of the dictionary, this slot will be re-used to form another chain, e.g., AUTOMATIC or STATIC chain
2-3	Length
4-5	Initially contains the hash chain. After the dictionary scan, this is re-used to form another chain, e.g., AUTOMATIC or STATIC chain
6-8	Offset inserted by storage allocation phase (as for a data item)
9-10	DECLARE statement number
11	'Other 1' code byte (See "First Code Byte - Other 1" in Section 5 below)
12	'Variable' code byte (See "Variable Byte" in Section 5 below)
13	'Other 2' code byte (See 'Second Code Byte - Other 2" in Section 5 below)
14	'Other 3' code byte (See "Third Code Byte - Other 3" in Section 5 below)
15	'Other 4' code byte (See "Fourth Code Byte - Other 4" in Section 5 below)
16 onwards	Content determined by variable code byte.

	After variable information
2 bytes	Symbol slot
1 byte	Level
1 byte	Count
1 byte	BCD length-1
	BCD

With the exception of the 2-byte symbol slot, the general format is the same as for a structure.

Dictionary Entries for Data Items

The format is as follows:

Byte Number	Description
1	Code byte may be X'0F', X'1F', X'2F', X'3F', X'8F', X'9F', X'AF', or X'BF'. The last four cases apply when the item occurred in a parameter list in a PROCEDURE or ENTRY statement. In this case, bytes 4 and 5 will contain the dictionary reference of the corresponding formal parameter type 1 entry. In the first four cases, bytes 4 and 5 initially contain the hash chain. After the scan of the dictionary this slot will be re-used to form another chain, e.g., AUTOMATIC or STATIC chain
2-3	Length
4-5	See above
6-8	Offset. (See "Format of Variable Information" in Section 6 below)
9-10	DECLARE statement number. If the variable has not been explicitly declared, this number is zero; otherwise, it is the statement number assigned to the DECLARE statement from which the variable was obtained.
11-16	Six code bytes. These are: other 1, variable, other 2, other 3, other 4, and data. (See "Code bytes" in Section 5 below for a description of these bytes.)
17-19	Data information, which is: 1. with numeric data, the precision and scaling, left justified 2. for strings of fixed maximum length, the binary version of the string length in the two leftmost bytes of the data information 3. for strings of adjustable length, the text reference of a second file statement giving the expression for the string length 4. Bit 0 of byte 19 indicates that the temporary is used as an argument for halfword binary temporaries Note: In the case of a temporary data variable for an argument, the first bit of byte number 19 is set to 1 by phase GP. It is set to 0 by phase IM for temporary arguments to built-in functions and pseudo-variables. It is examined by phase QU.
20-21	Symbol slot, containing either zero, or one of the following: 1. If the SYMBOL and DED bits are not on, and the data item has a picture, these bytes contain the dictionary reference of the picture table entry 2. If the DED bit is on and the SYMBOL bit off, this slot points at a DED entry. If the item has a picture, the DED entry will contain the picture table address 3. If the SYMBOL bit is on, the slot will point at a SYMBOL entry. This again will contain the picture address, if specified
22	Variable information. The contents of these bytes are determined by the variable code byte. (See "Format of Variable Information" in Section 6 below)
1 byte	Level
1 byte	Count

1 byte	BCD length-1
	BCD

Major and Minor Structure Entries

These entries do not include base elements, i.e., they do not have any data attributes or LABEL. Their format is:

Byte Number	Description
1	Code byte may be X'2E', X'3E', X'AE', or X'BE'. The last two indicate that there is no BCD attached. When the identifier occurs in the parameter list of a PROCEDURE or ENTRY statement, bytes 4-5 contain the dictionary reference of the formal parameter type 1 entry. In the case of the first two code bytes, bytes 4-5 of the entry initially contain the hash chain. This is later modified by Phase FT
2-3	Length
4-5	See byte number 1
6-8	These bytes are used by the storage allocator; they will finally contain one of the following offsets: 1. For structures which are parameters, or are dynamically defined, the offset from the start of the major structures dope vector or the minor structures dope vector. 2. For major structures, the offset from the start of AUTOMATIC or STATIC of the address slot which will point at the structure dope vector 3. For CONTROLLED structures, only that specified for minor structures in 1 , above 4. For structures in STATIC EXTERNAL the contents depend on the setting of the "dope vector required" bit in the "other 3" code byte. If this bit is off and the item is a major structure, the slot contains the offset from the start of STATIC of the slot which will contain the address of the first byte of the structure. If the dope vector bit is on, the slot contains the offset from the start of STATIC of the address slot which will point at the structure dope vector. The offset slot is not used in either of the above cases for minor structures
9-10	DECLARE number, i.e. the statement number of the DECLARE statement which produced the structure
11-15	Five code bytes. These are: other 1, variable, other 2, other 3, and other 4
16	Variable information. The content is determined by the variable code byte, and will always include the information required for structure members. (The format is described under "Format of Variable Information" in Section 6 below)
	After variable information:
1 byte	Level
1 byte	Count
1 byte	BCD length-1
	BCD

5. CODE BYTES FOR DATA, LABEL, AND STRUCTURE DICTIONARY ENTRIES

The First Code Byte - Other 1

Bit No.	Description	Set By
0	Symbol or requires load constant if label constant	Phase EL, FT, or NU
1	Defined on	Phase EL
2	Mentioned in CHECK list	Phase FO
3	Needs DVD	Various
4	Last member in structure	Phases EL or EW
5	Variable dimensions	Phase EL
6	* dimensions	Phases EL and FT
7	* string length for data item	Phases EL and FT
	--More labels follow for a label constant	Phase EG
	---Major Structure - no member of the structure has a dimension or length attribute which is not *	Phase EY

The Second Code Byte - Other 2

Bit No.	Description	Set by
0	Dynamically defined	Phase EL
1	CONTROLLED major structure with varying strings	Phase EY
2	NORMAL = 0, ABNORMAL = 1	Phases EI and FT
3	Reserved	
4	Formal Parameter	Phase EI
5	INTERNAL = 0, EXTERNAL = 1	Phase EI
6 and	00 = AUTOMATIC or DEFINED or simple parameter	Phase EL
	01 = STATIC	Phase EL
7	11 = CONTROLLED	Phase EL

The Third Code Byte - Other 3

Bit No.	Description	Set by
0	Needs dope vector	Phases EK and EY if variable dimension entries, variable string length, or in CONTROLLED storage; Phase NU when item appears in an argument list
1	Needs DED	Phase NU
2	Needs no storage for the item itself	Phase GP
3	Correspondence defined	Phase FV
4	Chameleon	Phase GP
5	Data Variable UNSAFE	Set by phase KE 1= UNSAFE 0= SAFE This use is local to the K phases
	Sign bit for first offset	Phase PH for STATIC and Phase PT for AUTOMATIC
6	Indication of the state of the value in the first offset 0 = rubbish 1 = good value	Phase PH for STATIC and Phase PT for AUTOMATIC
7	As above but for second address slot	Phase PH

The Fourth Code Byte - Other 4

Bit No.	Description	Set by
0	Usage (i): An explicit alignment declaration has been made	Phase EL (for EW)
	Usage (ii): A constant has been produced for this structure or array	Phase JK
1 and 2	00 = Not temporary 01 = Temporary type 2 10 = Temporary not sold 11 = COBOL temporary	Phase GP, HF, HK, IM, or LB
3	Member of defined structure	Phase FV
4	Packed = 0 Aligned = 1	Phase EL
5	Major structure	Phase EL
6	No dope vector initialization	Phase GP
7	A temporary type 2 which has been incorporated in work-space 1 or RDV required. For COBOL temporaries this bit means RDV required	Phase OB

Variable Byte

Bit No.	Description
0	Second address slot
1	Dimensioned
2	Member of structure
3	Value list for label variables or POS for defined items
4	Initial value if not a structure or LIKE if a structure
5	EXTERNAL slot
6	Defined slot
7	CONTROLLED from ALLOCATE statement

For a detailed explanation of the significance of these bits and a description of the extra slots associated with them, see "Format of Variable Information" in this Appendix.

Data Byte

BIT	0	1	2	3	4	5	6	7	
CAD or NUMERIC FIELD	1	POINTER/ OFFSET *	Sterling NON STERLING	Long Short/ OFFSET	Cad. Numeric Field	Binary Decimal	Float Fixed	Complex Real	1 0
STRINGS	0	Adjustable Length String	Aligned Unaligned	Varying	No Picture Picture	Char Bit	AREA VARI-ABLE*	Not Used	1 0

*AREA, POINTER, and OFFSET data byte settings are:
AREA: X'02' superimposed on the non-pictured CHAR string data byte entry
POINTER: X'40' superimposed on the FIXED BIN data byte entry
OFFSET: X'50' superimposed on the FIXED BIN data byte entry

Note: The LONG bit X'10' is set to 1 for halfword binary and 0 for fullword binary

6. FORMAT OF VARIABLE INFORMATION

Data items, labels, and structures require pointers to various tables if they have certain attributes; for example, if they are dimensioned or defined on a base. Space will be left for information only if the attribute is present. This leads to an addressing problem of how to find the position of the information when the presence of other attributes alter its address.

The problem is resolved by collecting, into one byte, all the attributes which require more than one bit to describe them. This has taken the second place in all the collections of attribute bytes. The presence of a bit in this byte indicates the presence of further information. The offset of this information from the start of the variable information is given by the presence of the bits to the left of the one of interest. Each bit will have a value associated with it. The sum of the values of the bits present and to the left of the one of interest will give the value of the offset. This is achieved in the coding by moving the code byte, masking off the bits to the right of the one being tested and the bit itself, and translating the byte.

The information produced by the presence of the following bits in the variable byte is as follows:

Bit number 0:
The second offset slot is 4 bytes long. The contents of this slot are described in this appendix. The decision to include a second offset slot in a dictionary entry is based on questions about the nature of the identifier. Refer to Figure 10.

|Y| implies that a second offset slot will be given,

|N| that it will not.

Bit number 1:
The dimensioned bit. The slot produced by this is three bytes long. The first byte will contain the number of dimensions, the next two the dictionary reference of the dimension (multiplier) table

Bit number 2:
Member of a structure bit. This slot is ten bytes long and has the following format:

Byte Number	Description
1	Declared level number
2	True level number
3-4	Dictionary reference of the containing structure
5-6	Dictionary reference of the next member in the structure
7	Alignment Note: The value held in this byte corresponds to ELEMENT size (in bits) and would be one of the following:

X'01' - BIT alignment
X'08' - CHAR alignment
X'10' - HALFWORD alignment
X'20' - FULLWORD alignment
X'40' - DOUBLEWORD alignment

8-10 Element length

Bit number 3:
POS for defined items. The two-byte slot will contain the POS value as a binary integer.

Bit number 4:
The initial value or LIKE bit is a four-byte slot.

1. For normal initial value. The first two bytes contain the dictionary reference of the associated 'Initial Value' dictionary entry. The fourth byte contains X'F0'
2. For INITIAL CALL. The first three bytes contain the text reference of a second file statement. The fourth byte contains X'0F'.
3. For initial labels. The first three bytes contain the text reference of a set of second file statements. The fourth byte contains X'FF'. If there is an initial slot but no initial values the fourth byte contains X'00'
4. For LIKE. The first two bytes contain the LIKE chain. The third and fourth bytes contain the dictionary reference of the likened structure

Bit number 5:
The EXTERNAL bit. This 2-byte slot contains the ESD number

Bit number 6:
The DEFINED bit. This 7-byte slot contains the following:

Byte Number	Description
1-2	Defined chain.
3-4	Dictionary reference of base
5-7	The text reference of a second file statement. After the dictionary these bytes will contain X'FFFFFF' if the base is unsubscripted.

Bit number 7:
The CONTROLLED from ALLOCATE bit. This bit is on for dictionary entries for level 1 CONTROLLED data specified in ALLOCATE statements. The two-byte slot contains the dictionary reference of the dictionary entry for the data constructed from the DECLARE statement

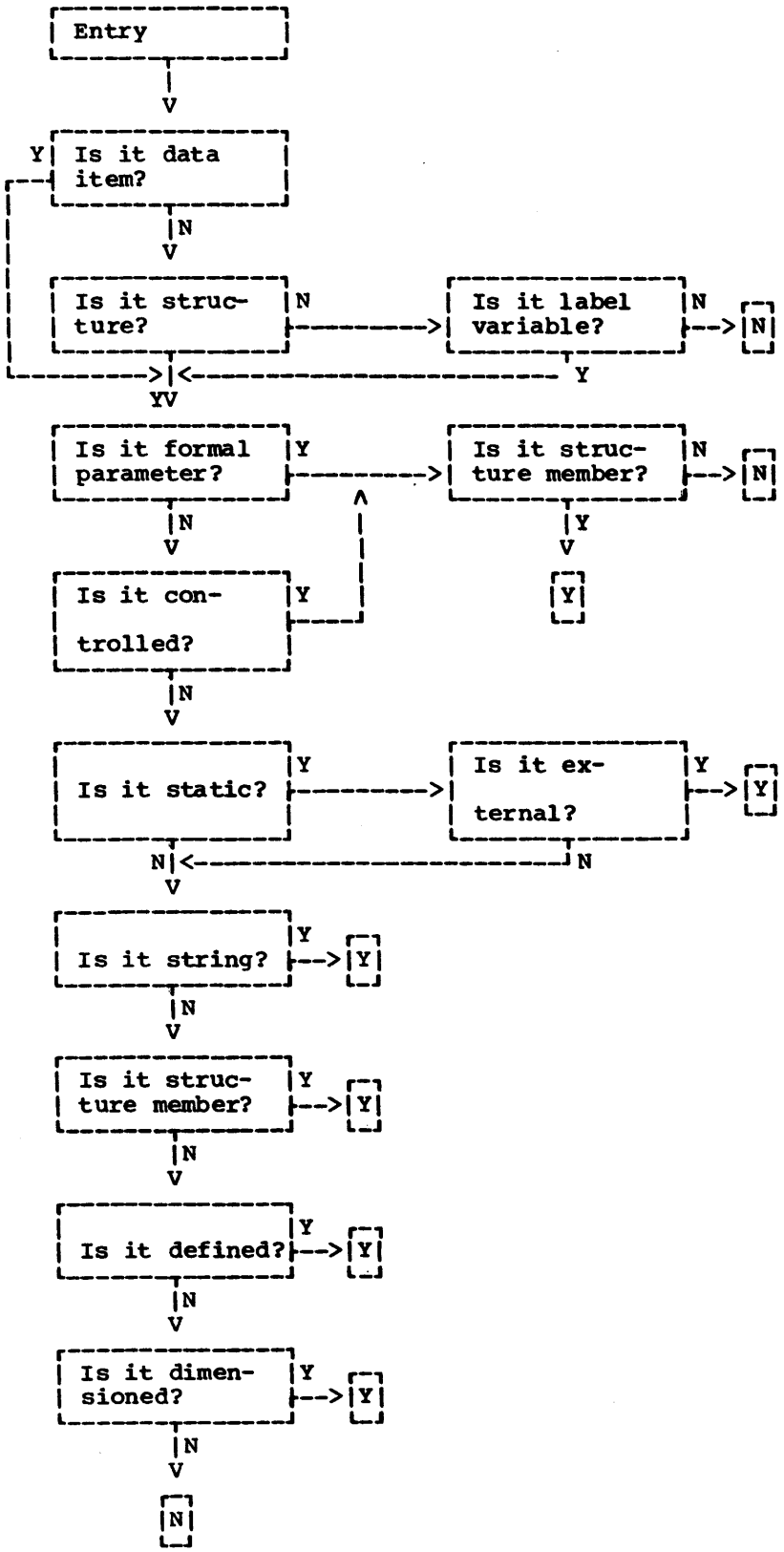

Figure 10. Decision to Include a Second Offset Slot

Uses of the OFFSET1 and OFFSET2 Slots in Data, Label, and Structure Dictionary Entries

The OFFSET1 slot is in bytes 6-8 of the dictionary entry and the OFFSET2 slot is part of the variable information.

STATIC INTERNAL Structures

Major and minor structure entries: OFFSET1 slot not used. OFFSET2 slot contains offset of structure dope vector from start of STATIC INTERNAL control section (if there is a dope vector)

Basic elements: OFFSET1 slot contains offset of virtual origin (in the case of dimensioned items) or offset of item (when not dimensioned) from start of STATIC INTERNAL control section. OFFSET2 slot contains offset of dope vector (if there is one) from start of STATIC INTERNAL control section

AUTOMATIC Structures

Constant dimensions: as for STATIC INTERNAL except that all offsets are relative to start of DSA.

Adjustable dimensions: major and minor structure entries: OFFSET1 slot not used. OFFSET2 slot contains offset of structure dope vector from start of DSA (if there is a dope vector)

Basic elements: OFFSET1 slot not used. OFFSET2 slot contains offset of element's dope vector (if there is one) from the start of the DSA

STATIC EXTERNAL and Parameter Structures

Major structure entry: OFFSET1 slot contains offset of address slot from start of data region. OFFSET2 slot contains size of EXTERNAL control section. (Offset of major structure dope vector = 0.)

Minor structure entries: OFFSET1 slot not used. OFFSET2 slot contains offset of structure's dope vector from start of major structure dope vector.

Basic elements: OFFSET1 slot not used. OFFSET2 slot contains offset of element's dope vector from the start of the EXTERNAL control section

CONTROLLED Structures

Major and minor structures: OFFSET1 slot not used. OFFSET2 slot contains offset of structure dope vector from point to which pseudo register points. (In the case of the major structure, this value will be zero.)

Basic elements: OFFSET1 slot not used. OFFSET2 slot contains offset of element's dope vector relative to address in pseudo-register.

Non-Structured Arrays in STATIC INTERNAL

OFFSET1 slot contains offset of vertical origin of the array relative to start of data region. OFFSET2 slot contains offset of dope vector (if there is one) from the start of the data region.

Non-Structured Arrays in AUTOMATIC

Constant dimensions: as for STATIC INTERNAL

Adjustable dimensions: OFFSET1 slot not used. OFFSET2 slot contains offset of dope vector from start of data region.

STATIC EXTERNAL, CONTROLLED or Parameter Array

OFFSET1 slot contains offset of address slot which contains a pointer to the arrays dope vector. (Not used in the case of CONTROLLED.) OFFSET2 slot is not present.

Non-Structured Scalar Strings in STATIC INTERNAL

OFFSET1 slot contains offset of datum from start of data region. OFFSET2 slot contains offset of dope vector (if there is one) from start of data region.

Non-Structured Scalar Strings in AUTOMATIC

Constant length: as for STATIC INTERNAL

Adjustable length: OFFSET1 slot not used. OFFSET2 slot contains offset of dope vector from start of data region.

Non-Structured Scalar Strings in STATIC EXTERNAL, CONTROLLED or Parameter

OFFSET1 slot contains offset of address slot which points to string dope vector (not used in the case of CONTROLLED). OFFSET2 slot not present.

Non-Structured Non-String Scalars in AUTOMATIC or STATIC INTERNAL

OFFSET1 slot contains offset of datum from start of data region. OFFSET2 slot not present.

Non-Structured Non-String Scalars in STATIC EXTERNAL, CONTROLLED or Parameter

OFFSET1 slot contains offset of address slot which points to datum (not used in the case of CONTROLLED). OFFSET2 slot not present.

7. OTHER DICTIONARY ENTRIES

Label Constants - Extracted by the Read-In Phase

Byte Number	Description
1	Code byte X'00'
2-3	Length up to BCD length-1 byte
4-5	Hash chain - STATIC chain
6-8	Offset
9-10	Statement number (except when the label is mentioned in an ON CHECK list, in which case it gives the chain to the label BCD dictionary entry, code byte X'CE')
11	Other 1 Code Byte (See "First Code Byte - Other 1" in Section 5 above)
12-14	Second Offset Slot
15-16	Spare for Final Assembly
17	Level
18	Count
19	Count of Containing Block
20	BCD Length-1
21 etc.	BCD

Compiler Labels

The format is identical to that of a label constant, except for the omission of the BCD. The code byte is X'C3'. If the compiler label has been constructed for a label variable, then the BCD for the label and its subscript will follow on behind the entry and the total length of the entry is given in bytes 2-3.

Formal parameter type 1 entry

These entries are derived from the PROCEDURE and ENTRY statements, and do not contain any information other than that the identifier is a formal parameter. The format is as follows:

Byte Number	Description
1	Code byte X'40'
2-3	Length
4-5	Hash chain
6-7	These bytes will point to a full description of the identifier after Phase EK, or Phase FA, or Phase FE. These full descriptions are dictionary entries for the type of item they are describing. They do not contain the BCD of the identifier, but in the slot for the hash chain there is the dictionary reference of the corresponding formal parameter type 1 entry.
8	Level

9	Count
10	BCD length-1
11	BCD

For a description of the types of entry pointed to, see "Dictionary entry for parameter descriptions."

Dictionary entry for FILE

For attributes specified in OPEN statement the format is as follows:

Byte Number	Description
1	Code byte X'98'
2-3	Length
4-5	STATIC chain
6-8	OFFSET1
9-10	DECLARE statement number
11 onwards	String of second level markers (without preceding 'C8' code bytes) one for each attribute other than FILE, TITLE and IDENT.

This entry is created by the read-in phase and is referred to only as the argument of an ATTRIBUTES marker.

FILE Constants

Code X'08' is used for file constant entries, which have the following format:

Byte Number	Description
1	Code byte X'08'
2-3	Length
4-5	Hash chain, subsequently EXTERNAL or STATIC chain depending on whether FILE is EXTERNAL or INTERNAL
6-8	OFFSET1 (STATIC or transfer vector offset)
9-10	Declare statement number
11-12	Dictionary reference of attributes entry (zero if none)
13	Code byte (similar to the "other 2" code byte. Only internal/external bit used)
14-15	Dictionary reference of environment string (zero if none)
16	Level
17	Count
18	BCD length-1
19 onwards	BCD

FILE Parameters and Temporaries

Code X'89' is used for file parameters and for file temporaries. The format of the entry will be the same as that for label variables.

FILE Environment Entries

Code X'C8' is used for the environment string.

Byte Number	Description
1	Code byte X'C8'
2-3	Length
4 onwards	Internally coded form of argument of ENVIRONMENT option

Code X'C8' is also used for attributes collected from the DECLARE statement.

Byte Number	Description
1	Code byte X'C8'
2-3	Length
4 onwards	String of second level markers (without preceding code bytes X'C8'), one for each attribute other than FILE, ENVIRONMENT, EXTERNAL, or INTERNAL

Dictionary Entries from Constants

The format is:

Byte Number	Description
1	Code byte X'88'
2-3	Length
4-5	Hash chain
6	DATA byte

7	Data Precision*
8	Scale Factor* *These are the apparent precision and factor derived from the BCD of the constant (see Note 2)
9	Type (see note 1)
10	DATA byte (2)
11	Data Precision (2)**
12	Scale Factor (2)** **These bytes are inserted by the phase requesting conversion. If a picture is required, these bytes are used to contain a picture table reference (see Note 3)
13-14	Dictionary reference - used when a phase requires a constant to be converted into a specific location in storage
15	BCD

Notes:

1. The type byte has the following meaning:

   First and second bits:

   00 - normal BCD constant. The first offset slot must be relocated by the storage allocation phase, to contain the offset of the converted constant from the start of STATIC storage, rather than from the start of the constants pool

   11 - the BCD is replaced by the internal form of the constant. The first offset slot is treated in the same way as for the code 00

   10 or 01 - the constant is required to be converted into a specific location in storage. The second code implies the converted constant should be made negative before being stored

   Sixth bit: 1 indicates that the constant requires a DED.

   Seventh bit: 1 indicates that the constant requires a dope vector.

   Eighth bit: 1 indicates that no conversion is required.

2. After the constants processor the bytes 6 through 8 will contain the offset of the constant from the start of the pool of constants. If a dope vector is requested then the offset of this from the start of the constants pool is eight less than that of the converted constant.

3. Should a DED be required, this will be constructed by Phase PL. The two bytes, precision(2) and scale factor(2), will contain a dictionary reference of a DED dictionary entry. If the constant requires a dope vector then Phase OS will make a dictionary entry for it, and the dictionary reference preceding the BCD will be the dictionary reference of this.

Task Identifiers and EVENT Data

The format of the dictionary entries for task identifiers and EVENT data is, apart from the initial code byte, the same as that for a label variable.

Dictionary Entries for Built-in Functions

The format is:

Byte Number	Description
1	Code byte X'04'
2-3	Length
4-5	Hash chain - later becomes the STATIC chain
6-8	Offset - gives the position in STATIC storage of the load constant for Library routine
9-10	Code bytes - the first code byte contains a value which identifies the built-in function and also provides information about it. It is used mainly by phases IM and MD-MM inclusive. The second code byte contains further information about the built-in function (See "Second Code Byte.")
11-12	DECLARE statement number

13	Level
14	Count
15	BCD length-1
16	BCD

Second Code Byte

The second code byte contains the following information:

Bit Number	Description
0	May be passed as an argument
1	May have an array as an argument
2	Must have an array as an argument
3	Is a pseudo-variable
4	Indicates to which of the two tables the offset refers
5	May have an array (or structure) as an argument, but will return a scalar result

Internal Library Functions

Library routines, other than built-in or GENERIC functions, are known as Internal Library Functions. Their dictionary entry format is as follows:

Byte Number	Description
1	Code Byte X'C2'
2-3	Length
4-5	Hash chain
6-8	Offset
9	Library Code - identifies the particular Library routine required
10	Not used
11-12	Code Bytes - the first code byte contains a value used by phase MG to pick up complete information about the library function. The second code byte contains further information about the function
13	Level
14	Count

BCD entries

BCD entries are used when the LIKE or DEFINED attributes are used. A short dictionary entry with the format given below is used. This is pointed at by the dictionary entry with the attribute.

Byte Number	Description
1	Code Byte X'40"
2-3	Length
4	BCD length-1
5	BCD

Dictionary Entry for Parameter Descriptions

Dictionary entries for parameter descriptions are identical with the normal entry for data variable, label variable, structure, file, or entry points, except for the following details:

Hash chain contains pointer to formal parameter type 1. After Phase FT this pointer is moved to the bytes containing level and count

No BCD is present

No block identification is present for ENTRY or FILE

The code byte for an entry point - referred to as entry type 6 - is X'86'

ON Statements

Entries for ON statements are made by Phase FO, and contain the following:

Byte Number	Description
1	Code Byte X'CD'
2-3	Length
4-5	AUTOMATIC chain

6-8	Offset
9	Code byte as supplied by the Read-In Phase
10	Block level
11	Block count
12	n
13 onwards	n dictionary references of variables or ON condition entries

ON Condition

This entry is made by Phase FO:

Byte Number	Description
1	Code Byte X'4D'
2-3	Length
4-5	Hash chain later used as AUTOMATIC chain
6-8	Offset
9	Code byte as supplied by the read in phase
10	Block level
11	Block count
12	BCD length-1
13 onwards	BCD

CHECK List Entry

This entry is made by Phase FO:

Byte Number	Description
1	Code Byte X'C8'
2-3	Length
4	n where n is the number of dictionary references following
5 onwards	Dictionary references (2n bytes)

PICTURE Entry

The format of an entry in the picture table in the dictionary.

Byte Number	Description
1	Code Byte X'C8'
2-3	Length = L+13
4-5	Contains address of next entry in picture chain
6-8	Usage (1) (Before Phase FQ) Dictionary reference of associated declare or format statement, right adjusted Usage (11) Offset in STATIC storage
9	Code Byte (after Phase FQ) (See Code Byte description)
10	P - the number of digit positions in field in numeric picture.
11	Q - the number of digit positions after V character in numeric picture. Code X'80' represents 0, X'7F' represents -1, and X'81' represents +1.
12	W - apparent length of picture. - length of picture following. (For a non-numeric picture the length is obtained in bytes 12-13.)
14 onwards	Picture.

Byte 9 - Code Byte

Bit Number	Description
0	0 string 1 numeric
1	0 correct 1 error
2	0 not sterling 1 sterling
3	0 short 1 long
4	Not used

5	0 decimal 1 binary
6	0 fixed 1 floating
7	Not used

Dictionary Entry for Workspace Requirement

The format for a dictionary entry for workspace requirement is:

Byte Number	Description
1	Code Byte X'C8' or X'CA'
2-3	Length = 8
4-5	Total workspace required
6-8	Offset

If the code byte is C8 this is the temporary workspace used by pseudo-code (temporary type 1).

Dictionary Entry for Parameter Lists

Dictionary entries for parameter lists have the following format:

Byte Number	Description
1	Code Byte X'C5'
2-3	Length
4-5	STATIC chain
6-8	STATIC offset
9-10	Assembled length
11 onwards	Contains DCA's

Dictionary Entries for Dope Vector Skeletons

Byte Number	Description
1	Code Byte X'C6'
2-3	Length
4-5	STATIC chain
6-8	Offset in STATIC
9-10	Dictionary reference or DECLARE number
11 onwards	Bit pattern of skeleton dope vector

This entry is constructed by Phase PD

Symbol Table Entry

Symbol table entries are made by Phase PL.

Byte Number	Description
1	Code Byte X'C7'
2-3	Length
4-5	STATIC chain
6-8	Offset in STATIC of DED
9-11	Actual DED if not pictured. If a picture is involved, the last two bytes are the dictionary reference of the picture table entry
12-13	Offset in STATIC storage of symbol table entry
14-15	Dictionary reference of next item in the symbol table for this block
16-17	Dictionary reference of item requiring entry in symbol table

Dictionary Entry for AUTOMATIC Chain Delimiter

An entry for AUTOMATIC chain delimiter is made by Phase PP.

Byte Number	Description
1	Code Byte X'CC'
2-3	Length
4-5	AUTOMATIC chain
6-7	Pointer to first second file entry
8-9	Pointer to second second file entry

DED Dictionary Entry

An entry for a DED is created by Phase PL.

Byte Number	Description
1	Code Byte X'C7'
2-3	Length
4-5	STATIC or AUTOMATIC chain
6-8	Offset
9-10	Dictionary reference of variable
11-18	Eight bytes of RDV text
19-20	DECLARE number

The LONG bit X'10' of byte 9 is set to 1 for halfword binary and 0 for fullword binary.

If the DED requires a picture, the last two bytes contain the dictionary reference of the picture table entry.

This entry has the same format as the first eleven bytes of a symbol table entry. No item will require both types of entry. The type required will be chained from the symbol slot in an item.

DED2 Entries

These entries are generated when a DED is required for the conversion of a temporary result.

Byte Number	Description
1	Code Byte X'C1'
2-3	Length = 11
4-5	STATIC chain
6-8	Offset
9-11	Actual DED

Dictionary Entry for FED - Format Element Descriptor

The entry for a FED is made by Phase NV.

The entry is identical with a DED2 entry but with a length of 12, instead of 11. The storage allocated will be word-aligned.

Byte Number	Description
1	Code Byte X'C1'
2-3	Length = 12
4-5	STATIC chain
6-8	STATIC offset
9-12	Actual FED

Label BCD Entries

Label BCD entries are made by Phase FO.

Byte Number	Description
1	Code Byte X'CE'
2-3	Length
4-5	DECLARE number
6-7	Offset of the BCD in STATIC
8-9	Dictionary reference of item requiring BCD

These entries are constructed when a statement label or a PROCEDURE or ENTRY label is mentioned in an ON CHECK list. These entries are also made for EVENT and TASK variables. Phase PD will allocate storage in STATIC for the BCD of the label, and place the offset of this in the above entry.

Dope Vector Entries for Temporaries

This entry is constructed to indicate that a dope vector is required for a temporary result. At this stage the bytes in the entry contain the following:

Byte Number	Description
1	Code Byte X'C0'
2-3	Length
4-5	AUTOMATIC chain
6-8	Offset in the temporary type 1 stack. After Phase QJ this will contain the offset from the start of the DSA
9-10	Dictionary reference of dope vector skeleton entry

11-12	Length of string

Record Dope Vector Entry

This entry is constructed when a variable requires a record dope vector.

Byte Number	Description
1	Code Byte X'C29'
2-3	Length
4-5	STATIC or AUTOMATIC chain
6-8	Offset
9-10	Dictionary reference of variable
11-18	Eight bytes of RDV text
19-20	DECLARE number

Dope Vector Descriptor Entry

This entry is constructed for a structure which requires a dope vector descriptor.

Byte Number	Description
1	Code Byte X'CC'
2-3	Length
4-5	STATIC chain
6-8	Offset
9-10	Dictionary reference of structure
11-12	Chain to RDV entry or DECLARE number
13...	DVD text set up by Phase JK

Format of a Second File Dictionary Entry

Byte Number	Description
1	Code byte X'C8'
2-3	Length of entry
4-5	Statement number of the DECLARE or other statement giving rise to the second file statement
6-7	Dictionary reference of the entry type 1 of the block from which the second file statement was extracted
8-9	Dictionary reference of a three-byte slot in the dictionary.
10	Type of second file statement, i.e. the function it performs. This is the second byte of the dictionary reference used to designate the function in the actual second file statement

Dictionary Entry for a STATIC DSA

This entry is made by phase PA (whenever a block has its DSA in STATIC). The "size of DSA" slot (right-hand two bytes) in the Entry Type 1 is used to contain the dictionary reference in this entry.

Byte Number	Description
1	Code byte X'C8'
2-3	Length = 20
4-5	Dictionary reference of the next STATIC DSA entry, or zero if this is the last entry.
6-7	Offset address slot in STATIC for the DSA (set by phase PD).
8-10	Size of DSA (set by PT and amended by RF).
11-12	Dictionary reference of the Entry Type 1 of the block.
13	Code byte to be put into first byte of DSA.
14-16,	Offset of start of DSA in STATIC (set by phase TO).
17-18	Head of block's automatic chain.
19-20	Not used

Dictionary Entry for an Error Message

Byte Number	Description
1	Code byte X'C8'
2-3	Length
4-5	Chain
6-7	Messages number
8	Flags: Bit 0 on if text to be inserted in message 1 on if statement number

	to be inserted 2 on if a numeric parameter to be inserted 3 on if a dictionary reference to be inserted 4-7 Severity: X'0' Termination X'4' Severe X'8' Error X'C' Warning
9	Variable information in the format shown below: 2 bytes Statement number (if present) 2 bytes Numeric parameter (if present) 2 bytes Dictionary reference (if present)

If text is to be inserted it is contained in a second dictionary entry immediately following the main entry for the message. The format of this second entry is:

Byte Number	Description
1	Code byte X'C8'
2-3	Length
4	Flag: X'00' Text that follows has not been truncated and is 10 bytes or less X'01' Text that follows is not to be truncated and is greater than 10 bytes X'FF' Text that follows has been truncated and is to be printed within quotes.
5	Variable length of text (in compiler internal code).

8. DIMENSION TABLE

Each entry containing dimension information will result in a table being set up. This table is shown in Figure 11.

Code Byte C8	Two-byte length		Flag Byte
Zero byte	No. of dimensions (n)	Two-byte chain address	
VIRTUAL ORIGIN WORD			
One-byte marker	Not used	Lower bound (halfword)	
One-byte marker	Not used	Upper bound (halfword)	
		nth upper bound	
n multipliers			

Note: The one-byte marker is:

00 if bound is fixed point constant; bound is a two-byte binary constant, right-adjusted.

FF if bound is an expression; bound is a three-byte pointer to a second file statement in text.

7F if the bound is inherited and has an MTF function.

3F if the bound is inherited and is covered by a previous MTF function.

FO if the bound is specified by an *.

Figure 11. Dimension Table

9. DICTIONARY ENTRIES FOR INITIAL VALUES

The declaration of a variable with an INITIAL attribute produces these entries:

An INITIAL dictionary entry

and

One or more dictionary entries for constants

and perhaps

A second File Statement for any iteration expression contained in the INITIAL specification.

The INITIAL dictionary entry contains pointers to the constant entries and any Second File Statements, and is of the following format.

Byte Number	Description
1	Code Byte X 'C8'
2-3	Length of entry
4	Prefix options byte
5	INITIAL code byte X '79'
6	Left parenthesis
7 onwards	INITIAL value list (see below)
Final	Right parenthesis

INITIAL Value List

The INITIAL value list contains references to Second File Statements and dictionary entries which are created to correspond to the value in the input text.

The list contains the following code bytes to identify each associated dictionary reference:

X'F1' Constant iteration factor. This is followed by X'00' and the dictionary reference of the constant iteration factor.

X'F3' INITIAL value item. This is followed by X'00' and the dictionary reference of the constant. (The BCD of the constant is expanded by any imposed string replication factor).

X'F5' EOB marker. This is followed by X'00' and the dictionary reference of the next entry on the chain. (This will occur when the scratch core storage allocated for building the entry is not sufficient, and a chain of entries is constructed).

X'F7' Variable iteration factor. This is followed by the text reference of the Second File Statement containing the expression.

APPENDIX D: INTERNAL FORMATS OF TEXT

This appendix describes the internal formats of text at various points during the compilation of a source program. The appendix is organized in the following manner:

1. Text Code Bytes after the Read-In Phase
2. Text Formats after the Read-In Phase
3. Text Code Bytes on Entry to the Translator Phases
4. Format of Triples
5. Text Code Bytes in Pseudo-Code
6. Text Formats in Pseudo-Code
7. Text Formats in Absolute Code
8. Second File Statements, and the Formats of Compiler Functions and Pseudo-Variables
9. Pseudo-Code Phase Temporary Result Descriptors (TMPDs)
10. Library Calling Sequences
11. Descriptions of Terms and Abbreviations used in Text During a Compilation

Note: The internal formats of text during compile-time processing are described in Appendix J.

1. TEXT CODE BYTE AFTER THE READ-IN PHASE

First Level Table (00 to 7F)

	0	1	2	3	4	5	6	7
0	0	@	#	$	BLANK			
1	1	A	J		,	{	DO EQUALS	}
2	2	B	K	S	'		--->	
3	3	C	L	T	(			-
4	4	D	M	U				C¢'
5	5	E	N	V	)		<= ¬>	+
6	6	F	O	W	.			
7	7	G	P	X	ASSIGN	MULTIPLE ASSIGN	>= ¬<	/
8	8	H	Q	Y	:			REFER
9	9	I	R	Z	||		¬=	*
A	_			PSEUDO- VARIABLE	%			¢'
B					|		=	PREFIX -
C				FUNCTION				↑'
D					&		>	PREFIX +
E	SUBSCRIPT					LITERAL CONSTANT		↑'
F					¬		<	**

|<-Digits->|<-----Letters----->|<--------------Operators-------------->|

First Level Table (80 to FF)

	8	9	A	B	C	D	E	F
0	TO	LINE	A	HYBRID QUAL		SN		FL DEC IMAG
1	ALLOCATE		CALL	ENTRY		ASSIGN BY NAME		FL DEC REAL
2	BY		B			SL		FL BIN IMAG
3	FREE		RETURN	PROC		SL'	ON PROC	FL BIN REAL
4	WHILE		P	CHECK		CN		FIX DEC IMAG
5		DISPLAY	GOOB	BEGIN		GET		FIX DEC REAL
6	SNAP	COL	R			CL		FIX BIN IMAG
7		SIGNAL	GO TO	ITDO	WRITE	PUT	END DO	FIX BIN REAL
8	SYSTEM	E		NO CHECK	2nd LEVEL MARKER		END ITDO	INTEGER
9	WAIT	REVERT		DO	READ	UNLOCK	END	STG DEC REAL
A	THEN	F		DATA LIST DO				
B	DELAY		INIT LABEL	IF	LOCATE	REWRITE	END PROG	ON
C	CONTROL VARIABLE			SN2				ARRAY CROSS SECTION
D	EXIT	NULL	DECLARE	ELSE	DELETE	OPEN	END BLOCK	CHAR CONSTANT
E		C	X	NO SNAP				iSUB
F	STOP	ASSIGN		FORMAT		CLOSE	;	BIT CONSTANT

Second Level Table (00 to 7F) (preceded by second level marker byte C8)

	0	1	2	3	4	5	6	7
0		FILE			DECIMAL	OPTIONS	EXTERNAL	AREA
1					BINARY	IRREDUCIBLE	INTERNAL	POINTER
2		LIST			FLOAT	REDUCIBLE	AUTOMATIC	EVENT
3		EDIT	EVENT[1]		FIXED	RECURSIVE	STATIC	TASK
4	TITLE	DATA	PRIORITY		REAL	ABNORMAL[2]	CONTROLLED	CELL
5	ATTRIBUTES	STRING	REPLY		COMPLEX	NORMAL[2]	SECONDARY	BASED
6	PAGESIZE	SKIP			PRECISION 1	USES[2]		OFFSET
7	IDENT	LINE			PRECISION 2	SETS[2]		
8	LINESIZE	PAGE			VARYING	ENTRY	INITVAR 1	
9		COPY			PICTURE(NUM)	GENERIC	INITIAL	INITVAR 2
A	INTO	KEYTO			BIT ATTRIBUTE	BUILTIN	LIKE	
B	FROM	TASKOP			CHAR ATTRIBUTE		DEFINED	
C	SET		IN		DIMS(INTEGERS)		ALIGNED	
D	KEY				LABEL	ORDER	UNALIGNED	
E	NOLOCK	KEYFROM				REORDER	PACKED[2]	
F	IGNORE	FORMAT LIST		BY NAME	DIMS (NON-INTEGER)	RETURNS	POS	PICTURE (CHAR)

[1]The EVENT built-in function and pseudo-variable are known externally by the equivalent name COMPLETION.

[2]Obsolete attribute. The second level marker is used only to ensure correct warning message transmission in Read-In, and does not appear in text at any time.

Second Level Table (80 to FF)

	8	9	A	B	C	D	E	F
0	BUFFERED			MAIN		OVERFLOW	CONVERSION	CONDITION
1	UNBUFFERED							
2	EXCLUSIVE			REENTRANT		UNDERFLOW	STRING-RANGE	NAME
3	KEYED							
4	STREAM			SECONDARY		ZERODIVIDE	AREA	TRANSMIT
5	RECORD						PENDING	
6	BACKWARDS			TASK		FIXED OVERFLOW	ENDFILE	CHECK
7	SEQUENTIAL							
8	DIRECT			ON-BLOCK		SUBSCRIPT RANGE	ON RECORD	
9	PRINT							
A	ENVIRONMENT					ERROR	END PAGE	
B	INPUT							
C	OUTPUT					FINISH	KEY	NOCHECK
D	UPDATE							
E	TRANSIENT					SIZE	UNDEFINED FILE	
F								

2. TEXT FORMATS AFTER THE READ-IN PHASE

In the following statement formats the code bytes SN, SL, SL', POS, and OB have the following meanings:

SN statement number

SL statement label

SL' initial label

POS following SN is a 2-byte statement number
following SL is a 2-byte dictionary reference of statement label or entry type 1

OB prefix options byte, specifying ON conditions enabled for the statement as follows:

BIT	ON CONDITION
0	OVERFLOW
1	UNDERFLOW
2	ZERODIVIDE
3	FIXEDOVERFLOW
4	SUBSCRIPTRANGE
5	SIZE
6	CONVERSION
7	STRINGRANGE

The abbreviation SQUID means an identifier, possibly subscripted and/or qualified.

PROCEDURE Statement

The format of a PROCEDURE statement is as follows:

Byte Number	Description
1	Code byte SN or SL
2-3	POS
4	OB
5	PROCEDURE
6	Block level
7	Block count
8-10	PROCEDURE-BEGIN chain
11-13	DECLARE chain
14-16	ENTRY chain
17	Left parenthesis - optional
18...	Format parameter list - optional
	Right parenthesis - optional
	Attribute marker - optional
	Attribute code - optional
	Attribute list - optional
	Statement terminating semicolon

ENTRY Statement

The format of an ENTRY statement is as follows:

Byte Number	Description
1	Code byte SN or SL
2-3	POS
4	OB
5	ENTRY
6-8	ENTRY chain
9	Block level
10	Block count
11	Left parenthesis - optional
12...	Formal parameter list - optional
	Right parenthesis - optional
	Attribute marker - optional
	Attribute code - optional
	Attribute List - optional
	Statement terminating semicolon

BEGIN Statement

The format of a BEGIN statement is as follows:

Byte Number	Description
1	Code byte SN or SL
2-3	POS
4	OB
5	BEGIN
6	Block level
7	Block count
8-10	PROCEDURE-BEGIN chain
11-13	DECLARE chain
14	Statement terminating semicolon

END Statement

The format of an END statement is as follows:

Byte Number	Description
1	Code byte SN or SL
2-3	POS
4	OB
5	END1, END2, or END3 - END1 ends a PROCEDURE or BEGIN block; END2 ends an iterative DO block; END3 ends a non-iterative DO block
6	Block level for the containing block
7	Block count for the containing block
8	Statement terminating semicolon

IF Statement

The format of an IF statement is as follows:

Byte Number	Description
1	Code byte SN or SL
2-3	POS
4	OB
5	IF
6...	Expression
	THEN
	Statement or Group
	ELSE - optional
	Statement or Group optional

Note: The semicolon preceding the ELSE has been deleted

DO Statement

The format of a DO statement is as follows:

Byte Number	Description
1	Code byte SN or SL
2-3	POS
4	OB
5	DO or ITDO
6	CV
7	BKC
8...	Squid
	DO equals
	Expression
	TO
	Expression
	BY
	Expression
	WHILE
	Expression
	Statement terminating semicolon

ON Statement

The ON statement takes one of the following formats:

1.

Byte Number	Description
1	Code byte SN or SL
2-3	POS
4	OB
5	ON
6	ON Condition
7	SNAP or NOSNAP
8	Statement or block

2.

Byte Number	Description
1	Code byte SN or SL
2-3	POS
4	OB
5	ON
6	ON Condition
7	System
8	SNAP or NOSNAP

ASSIGN Statement

The format of the ASSIGN statement is as follows:

Byte Number	Description
1	Code byte SN or SL
2-3	POS
4	OB
5	ASSIGN or ASSIGN BY NAME
6...	Squid
	Comma - optional, may be repeated

	Squid - optional, may be repeated
	Variable number of bytes - optional, may be repeated
	ASSIGN
	Expression
	Statement terminating semicolon

WAIT Statement

The WAIT statement has the following format:

Byte Number	Description
1	Code Byte SN or SL
2-3	POS
4	OB
5	WAIT
6	Left parenthesis
7...	Identifier
	Left parenthesis - optional
	Expression - optional
	Right parenthesis - optional
	Comma
	Further optional parentheses and expressions
	Right parenthesis
	Left parenthesis - optional
	Expression - optional
	Right parenthesis - optional
	Statement terminating semicolon

CALL Statement

The CALL statement has the following format:

Byte Number	Description
1	Code byte SN or SL
2-3	POS
4	OB
5	CALL
6-8	CALL chain
9	Identifier
10	Left parenthesis
11	Expression
12...	Right parenthesis
	Left parenthesis
	Argument List
	Right parenthesis
	Statement terminating semicolon

GO TO Statement

The format of the GO TO statement is as follows:

Byte Number	Description
1	Code byte SN or SL
2-3	POS
4	OB
5	GO TO
6...	Squid
	Statement terminating semicolon

SIGNAL and REVERT Statements

The SIGNAL and REVERT statements have the following format:

Byte Number	Description
1	Code byte SN or SL
2-3	POS
4	OB
5	SIGNAL or REVERT
6	ON Condition
7	Statement terminating semicolon

DISPLAY Statement

The format of the DISPLAY statement is as follows:

Byte Number	Description
1	Code byte SN or SL
2-3	POS
4	OB
5	DISPLAY
6	Left parenthesis
7...	Expression
	Right parenthesis
	Left parenthesis - optional
	Squid - optional
	Right parenthesis - optional
	Statement terminating semicolon

DELAY Statement

The format of the DELAY statement is as follows:

Byte Number	Description
1	Code byte SN or SL
2-3	POS
4	OB
5	DELAY
6	Left parenthesis
7...	Expression
	Right parenthesis
	Statement terminating semicolon

RETURN Statement

The format of the RETURN statement is as follows:

Byte Number	Description
1	Code byte SN or SL
2-3	POS
4	OB
5	RETURN
6	Left parenthesis - optional
7...	Expression - optional
	Right parenthesis - optional
	Statement terminating semicolon

STOP, EXIT, and Null Statements

The format of STOP, EXIT and Null statements is as follows:

Byte Number	Description
1	Code byte SN or SL
2-3	POS
4	OB
5	Statement identifier
6	Statement terminating semicolon

INITIAL Label DECLARE Statements

The format of INITIAL label DECLARE statements is as follows:

Byte Number	Description
1	Code byte SN or SL
2-3	POS
4	OB
5	INITIAL Label DECLARE
6-8	DECLARE chain
9...	INITIAL label
	Statement terminating semicolon

DECLARE and ALLOCATE Statements

The format of DECLARE and ALLOCATE statements is as follows:

Byte Number	Description
1	Code byte SN or SL
2-3	POS
4	OB
5	DECLARE or ALLOCATE
6-8	DECLARE chain or ALLOCATE chain
9...	Declaration list
	Statement terminating semicolon

FORMAT Statements

The format of the FORMAT statement is as follows:

Byte Number	Description
1	Code byte SN or SL
2-3	POS
4	OB
5	FORMAT
6...	Format list
	Statement terminating semicolon

Format items are replaced by one-byte codes

OPEN and CLOSE Statements

The format of OPEN and CLOSE statements follows.

Byte Number	Description
1	Code byte SN or SL
2-3	POS
4	OB
5	OPEN or CLOSE
6...	File group list
	Statement terminating semicolon

READ, WRITE, GET, PUT, REWRITE, UNLOCK, and DELETE Statements

The format of READ, WRITE, GET, PUT, REWRITE, UNLOCK, and DELETE statements is as follows:

Byte Number	Description
1	Code byte SN or SL
2-3	POS
4	OB
5	Statement identifier
6...	Option list
	Statement terminating semicolon

3. TEXT CODE BYTES ON ENTRY TO THE TRANSLATOR PHASES

	0	1	2	3	4	5	6	7
0	DICT. REF.	FILE		COMPILER FUNCTION		FILE'		COMPILER FUNCTION'
1					COMMA	{	DO EQUALS	}
2		LIST		COMPILER FUNCTION CALL	FCOMMA	LIST'		COMPILER FUNCTION CALL'
3		EDIT	EVENT		(	EDIT'		-
4	TITLE	DATA	PRIORITY	COMPILER PSEUDOVAR	COMPILER FUNCTION COMMA	DATA'		COMPILER PSEUDOVAR'
5	ATTRIBUTES	STRING	REPLY		)	STRING'	≤	+
6	PAGESIZE	SKIP		ERROR	COMPILER ASSIGN			NDX
7	IDENT	LINE	BUY CHAMELEON	BUY ASSIGN	ASSIGN	MULTIPLE ASSIGN	≥ ¬<	/
8	LINESIZE	PAGE		ARCO	DROP	TMPD	LEFT	OFS
9		COPY			||	LD	¬=	*
A	INTO	KEYTO		PSEUDOVAR	BUYB CALSEQ	TT		PSEUDOVAR'
B	FROM	TASK	LIST MARK	END LIST MARK	|	JMP	=	PREFIX -
C	SET	RPL	IN	FUNCTION	CNVA	RPL'		FUNCTION'
D	KEY			ARGUMENT MARK	&		>	PREFIX +
E	NOLOCK	KEYFROM	DEFINED SUBSCRIPT	SUBSCRIPT	CNVB	LITERAL CONSTANT	DEFINED SUBSCRIPT'	SUBSCRIPT'
F	IGNORE	FORMAT LIST			¬	FORMAT LIST'	<	**

	8	9	A	B	C	D	E	F
0	TO	LINE	A		TO'	SN		
1	ALLOCATE		CALL				CALL'	EIO
2	BY	PAGE	B		BY'	SL		
3	FREE		RETURN	PROC				PROC'
4	WHILE	SKIP	P		WHILE'	CN	P'	
5		DISPLAY	GOOB	BEGIN	SORT	GET		BEGIN'
6	SNAP	COL	R		SNAP'	CL		
7		SIGNAL	GOTO	ITDO	WRITE	PUT	END DO	ITDO'
8	SYSTEM	E			SYSTEM'	E'	END ITDO	
9	WAIT	REVERT		DO	READ	UNLOCK	END	DO'
A	THEN	F	G			F'	G'	
B	DELAY			IF	LOCATED	REWRITE	END PROG	IF' OR ON
C	CV		SELL	SN2	CV'			ARRAY CROSS SECTION
D	EXIT	NULL	BUY	ELSE	DELETE	OPEN	END BLOCK	
E		C	X	NOSNAP		C'	END PROG 2	NOSNAP'
F	STOP	ASSIGN	BUYS	FORMAT		CLOSE	;	FORMAT

4. FORMAT OF TRIPLES

The triples produced as output from the translator phase each consist of five bytes, an operator followed by two two-byte fields. Each of the two-byte fields may be occupied by an operand, which may be a dictionary reference, a code byte or code bytes, or a numeric parameter. Two zero bytes in place of a dictionary reference operand imply that the operand is the result of previous operations, and that its type and location are described in a TMPD in the text.

The number of operands and the fields which they occupy depend upon the type of triple. The following table contains this information for all the triples used in the compiler.

TRIPLE TYPE	HEX CODE	FIELD 1	FIELD 2
KEYED	03	-	-
TITLE	04	-	OPERAND
ATTRIBUTES	05	-	OPERAND
PAGESIZE	06	-	OPERAND
IDENT	07	-	OPERAND
LINESIZE	08	-	OPERAND
INTO	0A	-	OPERAND
FROM	0B	-	OPERAND
KEY	0D	-	OPERAND
IGNORE	0F	-	OPERAND
FILE	10	-	OPERAND
LIST	12	-	-
EDIT	13	-	-
DATA	14	-	-
STRING	15	-	OPERAND
SKIP	16	-	OPERAND
LINE	17	-	OPERAND
PAGE	18	-	-
COPY	19	-	-
KEYTO	1A	-	OPERAND
TASK	1B	-	-
RPL	1C	-	-
IN	1D	-	OPERAND
KEYFROM	1E	-	OPERAND
FORMAT LIST	1F	-	-
UP	20	-	OPERAND
GIVING	21	-	OPERAND
DOWN	22	-	OPERAND
EVENT	23	-	OPERAND
PRIORITY	24	-	-
REPLY	25	-	OPERAND
BUY CHAMELEON	27	-	OPERAND
MSA	28	OPERAND 1	OPERAND 2
MTA	29	OPERAND 1	OPERAND 2
DEFINED SUBSCRIPT	2E	OPERAND	-
NULL-FUNCTION	2F	-	-
COMPILER FUNCTION	30	OPERAND	-
COMPILER FUNCTION CALL	32	OPERAND	-
COMPILER PSEUDO-VARIABLE	34	OPERAND	-
BUY ASSIGN	37	OPERAND 1	OPERAND 2
ARCO	38	-	-
SUBO	39	OPERAND 1	OPERAND 2
PSEUDO-VARIABLE	3A	OPERAND	-
SSUB	3B	OPERAND1	OPERAND2
FUNCTION	3C	OPERAND	-
SSB'	3D	OPERAND	-
SUBSCRIPT	3E	OPERAND	-
NOP	3F	-	-
PTCH	40	OPERAND 1	OPERAND 2
COMMA	41	-	*

*This triple may have two operands in format lists.

FUNCTION COMMA	42	-	OPERAND
COMPILER FUNCTION COMMA	44	-	OPERAND
ACT	45	OPERAND 1	OPERAND 2
COMPILER ASSIGN	46	OPERAND 1	OPERAND 2
ASSIGN	47	OPERAND 1	OPERAND 2
DROP	48	-	OPERAND
CONCATENATE	49	OPERAND 1	OPERAND 2
BUY B	4A	-	OPERAND
OR	4B	OPERAND 1	OPERAND 2
AND	4D	OPERAND 1	OPERAND 2
NOT	4F	-	OPERAND
LIST'	52	-	-
EDIT'	53	-	-
DATA'	54	-	-
STRING'	55	-	-
STMPD	56	OPERAND 1	OPERAND 2
MULTIPLE ASSIGN	57	OPERAND 1	OPERAND 2
TMPD	58	OPERAND 1	OPERAND 2
JMP	5B	OPERAND 1	OPERAND 2
RPL'	5C	-	-
LITERAL CONSTANT	5E	-	OPERAND
FORMAT LIST'	5F	-	-
UP'	60	-	-
DO EQUALS	61	OPERAND 1	OPERAND 2
DOWN'	62	-	-
ERROR	63	-	-
UPSIDE-DOWN COMMA	64	OPERAND 1	OPERAND 2
LESS/EQUAL	65	OPERAND 1	OPERAND 2
GREATER/EQUAL	67	OPERAND 1	OPERAND 2
LEFT	68	OPERAND 1	OPERAND 2
NOT EQUAL	69	OPERAND 1	OPERAND 2
EQUAL	6B	OPERAND 1	OPERAND 2
GREATER	6D	OPERAND 1	OPERAND 2
DEFINED SUBSCRIPT'	6E	OPERAND	-
LESS	6F	OPERAND 1	OPERAND 2
COMPILER FUNCTION'	70	OPERAND	-
COMPILER FUNCTION CALL'	72	OPERAND	-
MINUS	73	OPERAND 1	OPERAND 2
COMPILER PSEUDO-VARIABLE'	74	OPERAND	-
PLUS	75	OPERAND 1	OPERAND 2
COMR	76	-	OPERAND
DIVIDE	77	OPERAND 1	OPERAND 2
OFS	78	OPERAND	-
MULTIPLY	79	OPERAND 1	OPERAND 2
PSEUDO-VARIABLE'	7A	OPERAND	-
PREFIX MINUS	7B	-	OPERAND
FUNCTION'	7C	OPERAND	-
PREFIX PLUS	7D	-	OPERAND
SUBSCRIPT'	7E	OPERAND	-
EXPONENTIATE	7F	OPERAND 1	OPERAND 2
TO	80	-	-
ALLOCATE	81	-	OPERAND
BY	82	-	-
FREE	83	-	OPERAND
WHILE	84	OPERAND	-
*CV	85	-	OPERAND
SNAP	86	-	OPERAND
DELAY	8B	-	OPERAND
CV	8C	OPERAND 1	OPERAND 2
EXIT	8D	-	-
STOP	8F	-	-
LINE	90	-	OPERAND
END ALLOCATE	91	-	-
PAGE	92	-	-
SKIP	94	-	OPERAND

DISPLAY	95	-	OPERAND
COLUMN	96	-	OPERAND
SIGNAL	97	-	OPERAND
E	98	-	-
REVERT	99	-	OPERAND
F	9A	-	-
C	9E	-	-
A	A0	-	OPERAND
CALL	A1	-	OPERAND
B	A2	-	OPERAND
RETURN	A3	-	OPERAND
P	A4	-	OPERAND
GO OUT OF BLOCK	A5	-	OPERAND
R	A6	-	OPERAND
GO TO	A7	-	OPERAND
GOLN	A8	-	OPERAND
BUYT	A9	-	OPERAND
BUYX	AA	-	OPERAND 2
BSELL	AB	OPERAND 1	OPERAND 2
SELL	AC	-	OPERAND
BUY	AD	-	OPERAND
X	AE	-	OPERAND
BUYS	AF	-	OPERAND
PROC	B3	-	OPERAND
BEGIN	B5	-	OPERAND
ITERATIVE DO	B7	OPERAND	-
DO	B9	OPERAND	-
IF	BB	OPERAND 1	OPERAND 2
SN2	BC	-	OPERAND
NOSNAP	BE	-	OPERAND
FORMAT	BF	-	OPERAND
TO'	C0	-	OPERAND
BY'	C2	-	OPERAND
WHILE'	C4	OPERAND 1	OPERAND 2

WRITE	C7	-	-
READ	C9	-	-
CV'	CC	OPERAND 1	OPERAND 2
STATEMENT NUMBER	D0	OPERAND 1	OPERAND 2
CLN1	D1	-	OPERAND
STATEMENT LABEL	D2	OPERAND 1	OPERAND 2
CLN2	D3	-	OPERAND
COMPILER NUMBER	D4	-	OPERAND
GET	D5	-	-
COMPILER LABEL	D6	-	OPERAND
PUT	D7	-	-
E'	D8	-	-
UNLOCK	D9	-	-
F'	DA	-	-
REWRITE	DB	-	-
OPEN	DD	-	-
C'	DE	-	-
CLOSE	DF	-	-
CALL'	E1	-	-
P'	E4	-	-
END PROG	EB	-	-
END BLOCK	ED	-	-
END PROG 2	EE	-	-
END I/O	F1	-	-
PROC'	F3	-	OPERAND
BEGIN'	F5	-	OPERAND
ITERATIVE DO'	F7	-	OPERAND
DO'	F9	-	OPERAND
IF' OR ON	FB	-	OPERAND
PREFMT	FD	-	-
FORMAT'	FF	-	-

5. TEXT CODE BYTES IN PSEUDO-CODE

	0	1	2	3	4	5	6	7	8	9	A	B	C	D	E	F
0	DCV0	OSM1	BGPE	BLBS	LCR	LCDR	LCER	LM	BCTA'	LH	LA	CLI	CLC	TR		INST
1	DCV1	OSM2	EOB	BLBS'	BCR	SPM	CLR	SLA	BC	CH	CL	MVI	MVC	TRT		MVCL
2	DCV2	ALLOC	PCC	BUYS	HER	LTR	ALR	SLDA	DCF	AH	AL	NI	MVN	PACK		
3	DCV3	DCA3	CHSM	PINS	HDR	LTER	SLR	SLDL	BCTA	SH	SL	OI	MVO	UNPK		
4	DCV4	DCA4	ADR	RWA	BCTR	LTDR		SLL	BCT	MH	STC	SSM	MVZ	IGNORE		
5	DCV8	FREE	SN3	APRM	NR	LNR	LPR	SRA	N	STH	ST	TM	NC			
6	DROP	BUY	BCIN	USNG	OR	LNER	LPER	SRDA	O	QLA	EX	XI	OC	CONV		
7	EQU	SELL	STOP	EDIT	XR	LNDR	LPDR	SRDL	X	STD	STE	LA'	XC	CONV'		
8	PROC	PROC'	BGNP	FMT LST	LR	LDR	LER	SRL	L	LD	LE	DCF2	ZAP	USSL		
9	BEGIN	BEGIN'	BGNP'	FMT	CR	CDR	CER	STM	C	CD	CE	BCT'	CP	DRPL		
A	PASS	ADV	DROB'	FMT'	AR	ADR	AER	BXH	A	AD	AE	MDRP	AP	CNVA		
B	EOP	PLBS	PLBS'	EDIT'	SR	SDR	SER	BXLE	S	SD	SE		SP	SINL		
C	ECP2	PCBS	PSLD	ERROR	MR	MDR	MER	SL1	M	MD	ME	SN2	MP	CNVC1		IGN2
D	IPRM	IPRM'	ABS	PFMT	DR	DDR	DER	SN	D	DD	DE	OSM3	DP	CNVC2		IGN4
E	EPRM	EPRM'	ABS'		SVC	AWR	AUR	CL1	IC	AW	AU	EQU'	ED	CNVC3		IGN5
F	ITDO	ITDO'	ALIGN		BALR	SWR	SUR	CN	BAL	CVB	CVD	BSW	EDMK	CNVC4		IGN8

6. TEXT FORMATS IN PSEUDO-CODE

Pseudo-code Design

Pseudo-code is essentially a symbolic representation of machine code, designed in such a way that it is possible to directly transform it into executable machine code by an assembly process.

A unit consists of a one-byte operation code followed by, normally, a two or four-byte field and on the other occasions by a variable length field. The bit pattern of the operation code indicates the type of unit which it heads.

By having most units either three or five bytes long, the scanning of pseudo-code is a fairly straightforward process.

The format of the various pseudo-code units is as follows:

Three-byte unit: this consists of a one-byte operation code followed by a two-byte literal offset, and it appears immediately after the symbolic representation of the instruction to which if refers.

Five-byte unit: there are four basic five-byte units which have the following formats.

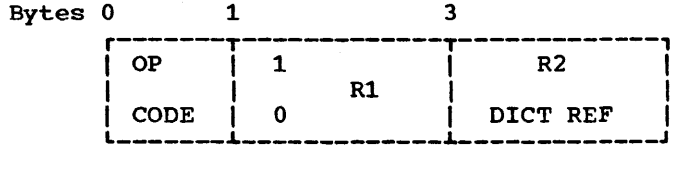

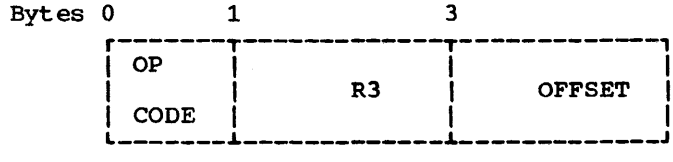

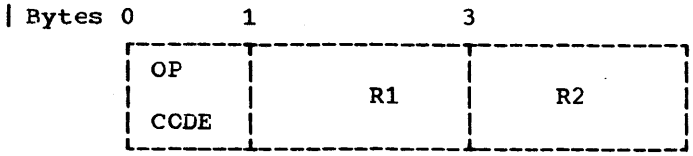

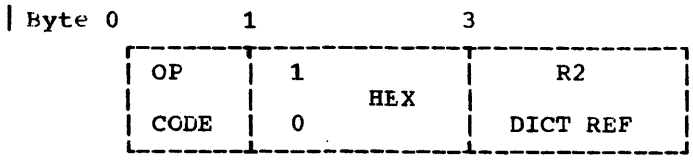

Using these units with, if necessary, a three-byte unit, it is possible to symbolically represent any possible RR, RX, RS or SI instruction.

Variable length unit: the format of this is:

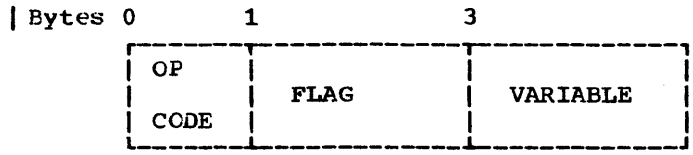

With a specially designed variable field described by a two-byte flag, it is possible to represent any SS instruction with this unit.

The first byte of the two-byte flag indicates the format of the variable field and the second gives the length of the total unit.

RX Instructions

The following examples illustrate the basic forms of an RX instruction and the way in which they are represented in pseudo-code.

L R1,JOE

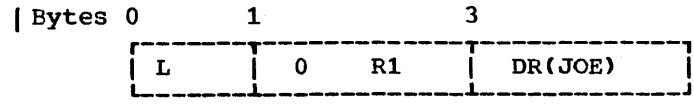

L R1, JOE+24

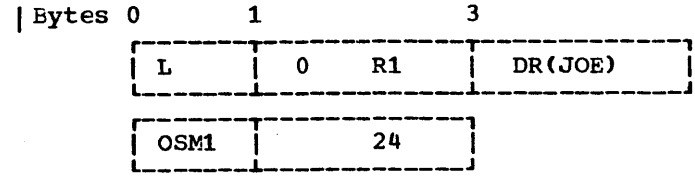

L R1,JOE(R3)

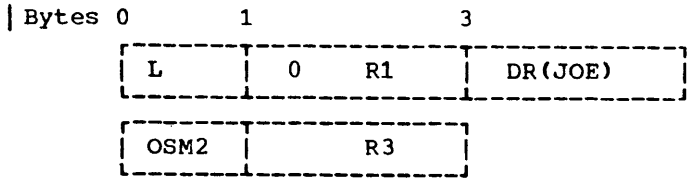

L R1,JOE+24(R3)

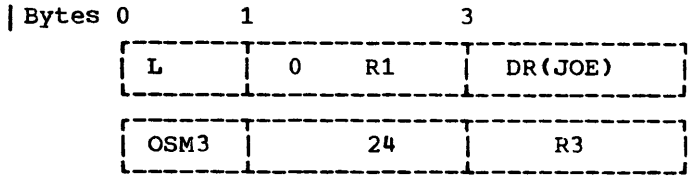

Alternatively, JOE might be a base register in which case the dictionary reference would be replaced by a symbolic register. The two forms are distinguished by setting the flag bit of the first symbolic register equal to one when a base register is intended.

L R1,0(R3,R2)

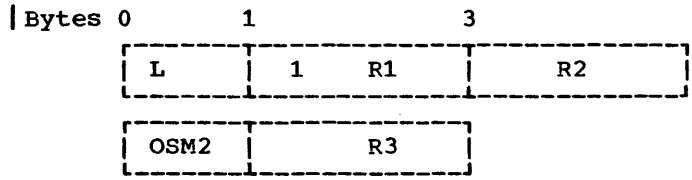

When a branch instruction is generated which branches to a compiler generated EQU value, bit two of the second byte is set to one to indicate that the second field is in fact an EQU value.

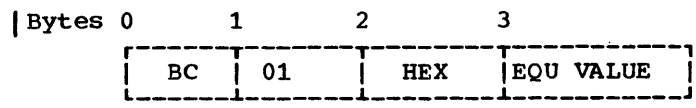

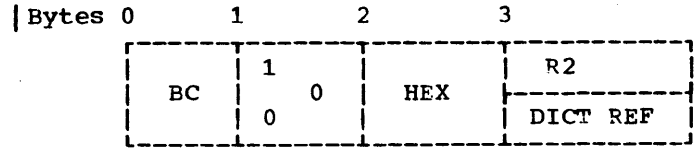

RS Instructions

The following examples illustrate the basic forms of an RS instruction and the way in which they are represented in pseudo-code:

```
BXH R1,R2,ALPHA

| Bytes 0        1              3
        ┌──────┬──────────────┬──────────────┐
        | BXH  |  0     R1    |  DR(ALPHA)   |
        └──────┴──────────────┴──────────────┘

        ┌──────┬──────────────┐
        | OSM2 |       R2     |
        └──────┴──────────────┘
```

```
BXH R1,R2,ALPHA+24

| Bytes 0        1              3
        ┌──────┬──────────────┬──────────────┐
        | BXH  |  0     R1    |  DR(ALPHA)   |
        └──────┴──────────────┴──────────────┘

        ┌──────┬──────────────┬──────────────┐
        | OSM3 |       24     |      R2      |
        └──────┴──────────────┴──────────────┘
```

Alternatively, ALPHA might be a base register in which case the dictionary reference would be replaced by a symbolic register as in the RX instruction.

```
SLA R1,6

| Bytes 0        1              3
        ┌──────┬──────────────┬──────────────┐
        | SLA  |       R1     |      6       |
        └──────┴──────────────┴──────────────┘
```

RR Instructions

The following example illustrates the form of an RR instruction and the way in which it is represented in pseudo-code.

```
AR R1,R2

| Bytes 0        1              3
        ┌──────┬──────────────┬──────────────┐
        | AR   |       R1     |      R2      |
        └──────┴──────────────┴──────────────┘
```

SI Instructions

The following examples illustrate the basic forms of an SI instruction and the way in which they are represented in pseudo-code:

```
CLI BETA,X'FF'

| Bytes 0        1              3
        ┌──────┬──────────────┬──────────────┐
        | CLI  |  0     FF    |  DR(BETA)    |
        └──────┴──────────────┴──────────────┘

CLI BETA+4,X'FF'

| Bytes 0        1              3
        ┌──────┬──────────────┬──────────────┐
        | CLI  |  0     FF    |  DR(BETA)    |
        └──────┴──────────────┴──────────────┘

        ┌──────┬──────────────┐
        | OSM1 |       4      |
        └──────┴──────────────┘
```

Alternatively, BETA might be a base register in which case the dictionary reference would be replaced by a symbolic register.

SS Instructions

Basically, an SS instruction consists of two base registers and a length byte. Since this does not conform to the format of other items of pseudo-code, it is necessary to represent an SS instruction with a variable length field, the length of which is specified in the second of two flag bytes immediately following the operation code.

This variable form of pseudo-code will be used to convey items of information internally between compiler phases, at the same time maintaining the items in the guise of pseudo-code.

Variable Length Item FLAG

The first bit of the FLAG indicates whether or not the unit represents a machine instruction. In the former case, the format of the instruction is:

```
| Bytes
  0     1     2       3     4     6     8     10
  ┌────┬────┬────────┬────┬────┬────┬────┬────┐
  |OP  |    |        |    |    |    |    |    |
  |    |FLAG|LENGTH  | F1 | F2 | F3 | F4 | F5 |
  |CODE|    |        |    |    |    |    |    |
  └────┴────┴────────┴────┴────┴────┴────┴────┘
```

The format of the FLAG is:

Bit	Zero	One
0	Always zero	
1	F2=dict. ref.	F2=sym reg.
2	F3=dict. ref.	F3=sym reg.
3	F4 not present	F4 present
4	F5 not present	F5 present
5-7	Not used	

The FI field is identical to the length field in the SS machine instruction. The field contains one or two lengths which are each one less than the corresponding lengths used in Assembler Language. The F4 and F5 fields contain literal offsets.

Compiler Function (Bit 1=1)

In compiler functions, the format of the FLAG depends on the operation code. Thus:

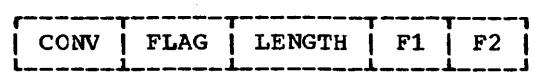

The format of the FLAG is:

Bits	Both Zero	Both One
0		Always one
1 and 2	F1=dict. ref.	F1=TMPD operand
3 and 4	F2=dict. ref.	F2=TMPD operand
5-7	Not used	

The FLAG in the IGNORE item does not contain any information.

The following examples illustrate the basic forms of an SS instruction and the ways in which they are represented in pseudo-code.

MVC ALPHA(7),BETA

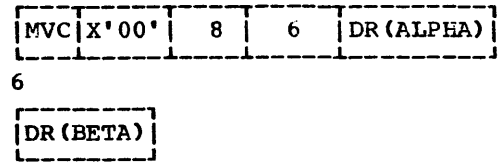

ZAP ALPHA+3(14), BETA(6)

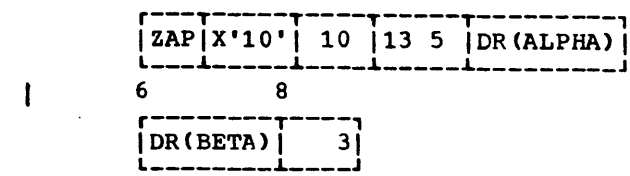

MVC ALPHA(6), BETA+11

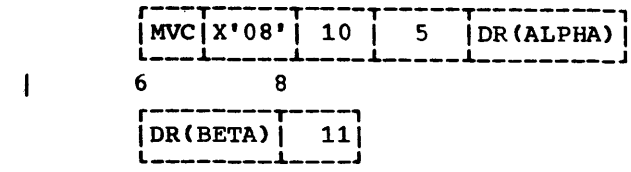

AP ALPHA+3(14),BETA+11(6)

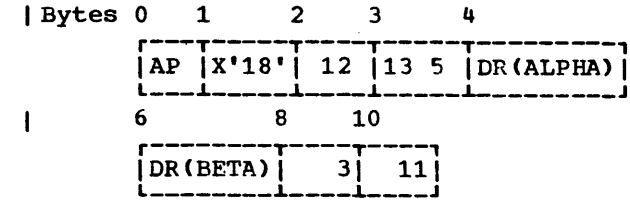

Alternatively, ALPHA and/or BETA might be base registers, in which cases, the dictionary references would be replaced by symbolic registers and the FLAG byte would be set accordingly:

MVO ALPHA(14), 11(6,R1)

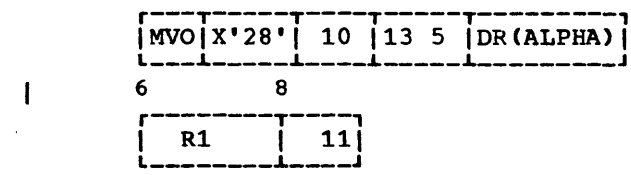

Pseudo-code Format between IEMRA and IEMRF

Fields that may hold a dictionary reference or register number have, at this time, the possibility of holding a literal offset. The presence of an offset is indicated by the first bit of the field being set to one, and earlier flags being set to 'register.'

7. TEXT FORMATS IN ABSOLUTE CODE

Where a standard set of assigned registers is to be used for a section of code, e.g. in the construction of prologues, or during the generation of addressing instructions, it is possible to generate instructions with registers in absolute code, instead of the normal pseudo-code two-byte symbolic registers. (See "Text Formats in Pseudo-Code" in this Appendix.)

Sections of absolute code are preceded by ABS markers and followed by ABS' markers. The operation codes are the same as the normal pseudo-code instructions (see "Text Code Bytes in Pseudo-Code" in this Appendix), but the instruction formats differ, as shown in the following examples:

RR Instructions

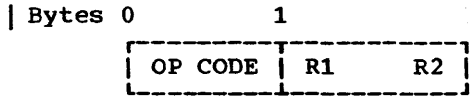

RX Instructions

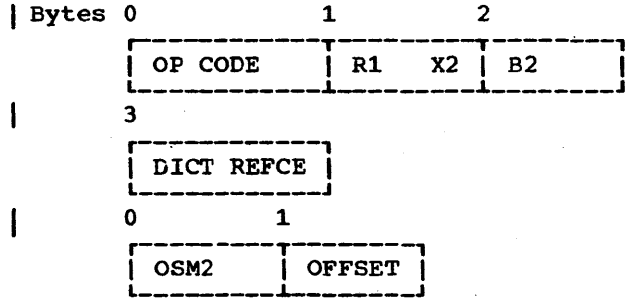

SS Instructions

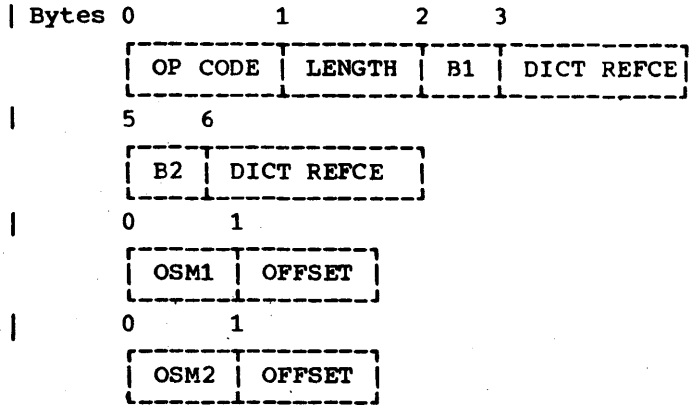

RS Instructions

Shift Instructions

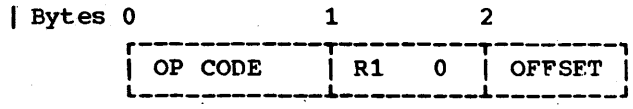

Other Instructions

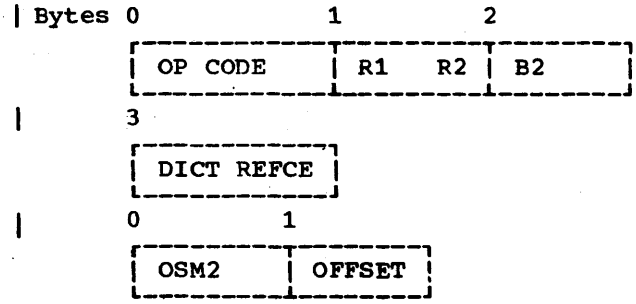

SI Instructions

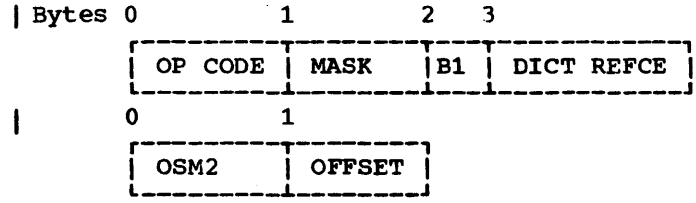

Note that the OSM1/OSM2 markers and their following offsets are all optional; note also that the OSM2 byte does not have a register following it, as in normal pseudo-code, but a literal offset.

The first bit (bit 0) of the byte containing the base is used as a flag. If this bit is a one, the following two bytes contain, in their low order position, a twelve bit offset, instead of a dictionary reference.

After Phases RA and RF all instructions in the text will be in absolute code.

8. SECOND FILE STATEMENTS, AND THE FORMATS OF COMPILER FUNCTIONS AND PSEUDO-VARIABLES

Second File Statements

Any expression occurring in an attribute must be put into a form which is acceptable to the translator phase. This means that it must look like a source statement. To comply with this, all expressions dealing with array bounds, string lengths, DEFINING, and INITIAL value iteration factors are converted into assignments to function references. These functions have a special meaning. They are not entered in the dictionary, and their dictionary references are to a region in the communications area. The pseudo-code physical phase dealing with each particular function generates in-line code instead of a function reference.

All the statements of this type are generated in the source text after the end of the original source program. They form a second program and are referred to later as the "second file."

The statements generated have the following overall format:

Byte Number	Description
1	Code byte SN2
2-3	Dictionary reference
4	Options byte
5	Statement type markers
6 onwards	Statement body

The dictionary reference is the reference of a second file dictionary entry. This is described in Appendix C. The options byte is that for the options operative in a prologue, i.e. no interruptions are accepted.

Array Bounds

The format of the second file statement for array bounds is as follows:

Byte Number	Description
1	Assignment statement marker
2	Code Byte X'00'
3-4	ADV code X'0002'
5	Compiler pseudo-variable
6	Left parenthesis
7	Code byte X'00'
8-9	Dictionary reference of array
10	Triple operator code byte X'44'
11	Code byte X'5E'
12	Code byte X'00'
13	Code byte X'00' for lower bound, X'01' for higher bound
14	Number of the dimension whose bound is referenced
15	Right parenthesis
16	Triple operator code X'46'
17...	Expression for bounds
	Statement terminating semicolon

Multiplier Function

Multiplier function statements are used to denote copying of a section of one dope vector into another. The format is:

Byte Number	Description
1	Assignment statement marker
2	Code byte X'00'
3-4	MTF code bytes X'0010'
5	Compiler call marker
6	Left parenthesis
7	Code byte X'00'

8-9	Dictionary reference 1
10	Triple operator code byte X'44'
11	Code byte X'00'
12-13	Dictionary reference 2
14	Triple operator code byte X'44'
15	Code byte X'5E'
16	Code byte X'00'
17-18	Offset 1
19	Triple operator code byte X'44'
20	Code byte X'5E'
21	Code byte X'00'
22-23	Offset 2
24	Triple operator code byte X'44'
25	Code byte X'5E'
26	Code byte X'00'
27-28	Length
29	Right parenthesis
30	Statement terminating semicolon

This statement requires the number of bytes specified by the length to be moved from the dope vector of the item at dictionary reference 2, starting at an offset of offset 2, to the dope vector of the item at dictionary reference 1, starting at an offset of offset 1.

String Length statement

The string length statement is used to initialize the maximum length slot in a string dope vector. The format is:

Byte Number	Description
1	Assignment statement marker
2	Code byte X'00'
3-4	SDV code X'0004'
5	Compiler pseudo-variable
6	Left parenthesis
7	Code byte X'00'
8-9	Dictionary reference
10	Right parenthesis
11	Triple operator Code X'46'
12...	Expression
	Statement termination semicolon

The dictionary reference is that of the item whose dope vector is being initialized. If the expression is defining the length of a string being returned by an internal function, then the dictionary reference is that of the entry type 2 belonging to the label. In Figure 6 the reference is to B or C depending on whether the statement appeared in a PROCEDURE/ENTRY statement, or an ENTRY attribute. If the item is a data item, an external procedure, or a formal parameter entry point, then the dictionary reference of that particular item appears in the statement.

INITIAL value statements

INITIAL value statements are used to initialize a vector of storage used to contain iteration factors. It is implied that the value of the expression must be converted to type integer. The format is as follows:

Byte Number	Description
1	Assignment statement marker
2	Code byte X'00'
3-4	IDV code
5	Compiler pseudo-variable
6	Left parenthesis
7	Code byte X'00'
8-9	Dictionary reference
10	Right parenthesis
11	Triple operator code X'46'
12...	Expression
	Statement terminating semicolon

The dictionary reference is to the item being initialized. The integer is the number of assignment statements of this type, and for this variable, that have been generated before this one.

Second File Statements for BASED and OFFSET

A statement is generated for a variable which is declared BASED with its associated pointer given, and for a variable which is an OFFSET with its associated base given. The format of the statement is similar to that of the INITIAL value statement except:

Byte Number	Description
3-4	PEXP code (BASED) X'0016' or BVEXP code (OFFSET) X'0017'
12	Expression (which must be a single dictionary reference of the associated pointer or base)

The dictionary reference in bytes 8-9 is that of the BASED or OFFSET variable.

Second File Statements for DEFINED

Second file statements are generated when an expression is associated with DEFINED, but the expression does not contain any iSUBs. The format is:

Byte Number	Description
1	Compiler assignment statement marker
2	Code byte X'00'
3-4	ADF code; X'0011' for base only X'0012' for subscripted base X'0013' for base with iSUB's
5	Pseudo-variable marker
6	Left parenthesis

Base7and subscript list

Right parenthesis

Statement terminating semicolon

9. PSEUDO-CODE PHASE TEMPORARY RESULT DESCRIPTORS (TMPD)

Temporary Description Stack

All information on temporary results is contained in this stack. Each item in the stack consists of 10 bytes. A maximum of 200 items is allowed.

Byte 1	Flag 1	describes the addressing method contained in bytes 5 through 10. 2 bits in this byte are also used during the release of temporary results
Byte 2	Code 2	describes the radix, scale, mode, string type etc. of the temporary result. The format of this byte is identical to the similar byte in the dictionary and the DED used by the Library subroutines. routines. (See "Data Byte" in Appendix C.)
Bytes 3-4	P,Q	describes the precision and scaling of arithmetic type results
Bytes 5-6	BASE	in one of the following forms: 1. "Reg by value" register containing the result - no index or offset is allowed. 2. "Reg by value" register containing the base address of the result stack 3. Offset from beginning of current temporary storage for results held in the temporary storage stack 4. Dictionary reference which specifies the base address of the result of a subscript calculation
Byte 7-8	NDX	in one of the following forms: 1. Symbolic indexing register for BASE type 2 and 4. 2. The number of bytes required in the temporary core stack for BASE type 1

Bytes 9-10 OFS — which is a literal offset to be inserted in the base address. When used with BASE type 1 the actual temporary offset is the sum of the offsets and the number of bytes required in the stack is the sum of the contents of OFS and NDX

Strings are described in the following ways:

If the string is of fixed length less than 256 bytes, it is given storage in the core stack. This type of string has a dictionary entry if it is passed to a subroutine.

If the string is of variable length or longer than 256 bytes, the storage is bought and sold when required. This type of string always has a dictionary entry.

If the string has no dictionary entry, it is described by the usual CODE bytes, the temporary core offset in BASE, and the byte length in NDX.

If the string has a dictionary entry, it is described by the usual CODE bytes and the dictionary reference IN BASE. The dictionary entry describes the location of the string which may be either the temporary area offset and size for the first type, or a BUY statement for the second type.

The 'top' of the stack is indicated by two pointers: PSTK and LSTK. PSTK points to the 'physical' top of the stack, which is the last item added. LSTK points to the 'logical' top of the stack, which is the next item to be released. The difference is necessary because the temporary storage stack may not be released in the same order as the description stack. When an item in the description stack is released, the corresponding temporary storage may not be at the top of the stack storage. As the storage stack is always released in order, the description is flagged and the LSTK is reduced by 1 item. When the corresponding temporary core is released from the top of the storage stack, the description is completely removed from the 'physical' stack.

FLAG	F5	F6	Whether F7 applicable	Comments
X'00'	Dictionary reference	-	Yes	
X'02'	Dictionary reference	-	No	STRUT2 output -- must SELL dictionary ref.
X'04'	Dictionary reference	-	No	REPEAT function result.
X'05'	Dictionary reference[1]	Dictionary reference[2]	No	SUBSTR function result.
X'20'	Dictionary reference	Index register	Yes	Arithmetic subscript, or SDV for varying string subscript.
X'41'	Symbolic register	Dictionary reference	Yes	Non-adjustable fixed string subscript, with DROP in STRUT2.
X'49'	Symbolic register	Dictionary reference	Yes	Non-adjustable fixed string subscript, without DROP in STRUT2.
X'80'	Register	-	No	Item in register -- F7 cannot exist.
X'C0'	Workspace offset	-	Yes	
X'C1'	Workspace offset	Dictionary reference	Yes	SDV for adjustable fixed string subscript.
X'C5'	Workspace offset	Dictionary reference	No	SUBSTR pseudo-variable result.

Notes
1. Since F6 cannot be used for both an index register and a dictionary reference, bits 2 and 7 of the FLAG byte cannot both be 1.
2. Many other bit configurations in the FLAG byte are meaningful and could be used for future applications.

Figure 12. Temporary Descriptions in Pseudo-Code -- Use of TMPD Triple Fields F5 and F6

Temporary Descriptions in Pseudo-Code

Descriptions are passed between pseudo-code phases using two or three TMPD triples, with the following formats:

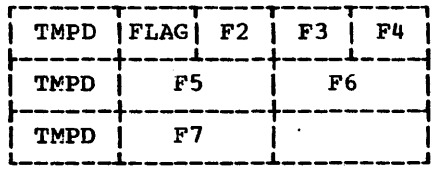

1. FLAG describes the use of fields F5, F6, and F7.

Bit Number	Value	Meaning
0 and 1	00	F5 contains a dictionary reference
	11	F5 contains a temporary workspace offset
	01	F5 contains symbolic register with address of item
	10	F5 contains register with value of item
2	0	F6 does not contain index register
	1	F6 contains index register
3	0	Two TMPD triples are used
	1	Three TMPD triples are used, and F7 contains an offset
4	0	Normal setting. String utility STRUT2 drops symbolic register in F5 if used for input
	1	String utility STRUT2 does not drop symbolic register
5	0	Normal setting
	1	Result of an invocation of SUBSTR or REPEAT
6	0	No SELL is required
	1	User of this description must SELL dictionary reference in F5. Set by string utilities for adjustable string result
7	0	F6 does not contain a dictionary reference
	1	F6 contains a dictionary reference

2. CODE contains the data byte (describing type, radix, scale, mode, etc.)

3. F3 and F4 contain:
   a. Precision and scale factor of coded arithmetic type data
   b. String length for coded non-adjustable strings (maximum length for varying strings)
   c. Picture dictionary reference for data with picture

4. F5 and F6 are at present used as shown in Figure 12.

5. F7 can be used by adding X'10' to the FLAG byte in all cases which give a meaningful result (see Figure 12).

10. LIBRARY CALLING SEQUENCES

Internal library routines are used for such things as data type conversion, where there is no explicit reference to the routine in the PL/I source program. The arguments are handed to the routines in registers. In pseudo-code form, assigned registers are used, and special markers, IPRM and IPRM' are used to indicate the calling sequence to the register allocator phase. Internal library calls appear in pseudo-code as:

```
IPRM
L       1,(ARGUMENT1)
L       2,(ARGUMENT2)
--------------------
L       15,IHE----(Routine Name)
BALR    14,15
IPRM'
```

The second byte of the IPRM item is used as a flag byte. The settings are as follows:

Bit 0 — Must be zero

Bit 1 — END, or RETURN statement not in BEGIN block calling sequence

Bit 2 — END statement calling sequence

External library routines calls correspond to explicit references to functions or I/O statements in the PL/I source program. The arguments to the routines are placed in workspace, and register 1 is set to point to the first argument. For pseudo-code form the calling sequence is preceded by an EPRM marker and followed by an EPRM' marker. Thus, the library calling sequence appears as:

```
MVC      WSP(N),(ARGUMENT1)
-------------------------
EPRM     1,WSP
L        15,IHE----(Routine Name)
BALR     14,15
EPRM'
LA      1,WSP
```

The second byte of the EPRM is used as a flag byte. The setting is as follows:

Bit 0 — A calling sequence to a PL/I procedure

11. DESCRIPTIONS OF TERMS AND ABBREVIATIONS USED IN TEXT DURING A COMPILATION

The table in this section gives first, the term or abbreviation; second, the phase in which the term is used; and third, a brief description of the meaning of the term or abbreviation. The key to the code used is:

R — After the Read-In Phase
PS — During the Pseudo-Code Phase
T — A triple or translator input code byte

Term or Abbreviation	Used In Phase	Description
A	R,T	Character string format item
ABS	PS	Indicates the start of absolute code (Appendix D7)
ABS'	PS	Indicates the end of absolute code
ADI	PS	Addressing instruction (used between phases RA and RF)
ADR	PS	The two byte operand contains a register for use by final assembly for addressing branch destinations beyond 4096 bytes from the program base
ADV	PS	Used in 2nd file assignment statements to indicate that the expression has been calculated and that the following code is only concerned with assignment to the variable, or its dope vector, which is the subject of the second file statement
ALIGN	PS	Indicates that 4 byte alignment is required in the code at this point
ALLOCATE	R,T,PS	Replaces the keyword ALLOCATE
APRM	PS	Indicates the library calling sequence for VDA or controlled storage
ARCO	T,PS	Provides space to allow insertion of argument conversion triple
AREA	R	Replaces keyword AREA
ARGUMENT MARK	R	Marker used by phases GK and GP to indicate he start of a function argument
ARRAY CROSS SECTION	R,T	Replaces the PL/I '*' used to specify an array cross section
ASSIGN	R,T	Marker which precedes an assignment statement
ASSIGN BYNAME	R	Precedes an assignment statement with the BY NAME option
ATTRIBUTES	R,T	Marker which precedes a dictionary entry containing the attributes which have been specified on an OPEN or CLOSE statement
AUTOMATIC	R	Replaces the keyword AUTOMATIC
B	R,T	Bit string format item
BACKWARDS	R	Replaces keyword BACKWARDS BEGIN

BASED	R	Replaces keyword BASED
BEGIN'	T,PS	Triple which terminates the BEGIN block triples
BGPE	PS	Indicates the end of the complete prologue for a begin block
BGNP	PS	Indicates the start of code for a BEGIN block with no prologue
BGNP'	PS	Indicates the end of code for a begin block with no prologue
BIT ATTRIBUTE	R	Replaces the keyword BIT
BIT CONST	R	Marker preceding a BIT string constant
BINARY	R	Replaces the keyword BINARY
BLBS	PS	Indicates the start of the prologue for a BEGIN block
BLBS'	PS	Indicates the end of the prologue for a BEGIN block
BUFFERED	R	Replaces keyword BUFFERED
BUILTIN	R	Replaces the keyword BUILTIN
BUY	T,PS	Code byte or triple which indicates that a temporary variable is required
BUY ASSIGNMENT	T	Triple which indicates assignment to a temporary variable, and which implies that the workspace for the temporary variable must be obtained before the assignment
BUYB	T	Triple or code byte which indicates that a scalar temporary is required for an aggregate argument to a generic scalar built in function
BUY CHAMELEON	T	Marker which indicates that workspace is required for a temporary variable of chameleon data type i.e. the data type is taken from the expression assigned to the variable
BUYS	T,PS	Code byte or triple which indicates that a temporary variable is required, and that initialization code exists between this triple and the BUY triple
BY	R,T	Replaces the keyword BY
BY'	T	Triple which indicates the end of a BY expression
BY NAME	R	Replaces the keyword BY NAME
C	R,T	Complex decimal format item
C'	T	Triple which indicates the end of a C format item
CALL	R,T	CALL statement marker
CALL'	T	Triple internal to phase IA which marks the end of a CALL statement
CELL	R	Replaces the keyword CELL
CHAR ATTRIBUTE	R	Replaces the keyword CHARACTER
CHAR CONSTANT	R	Marker preceding a character string constant
CHECK	R	Replaces the keyword CHECK
CHSM	PS	A special offset marker. Used only in absolute code to indicate that the offset may require changing
CL	R,T,PS	Compiler label marker
CLN1	T	Compiler label number triple, referred to

		once only in the current statement
CLN2	T	Compiler label number triple, referred to at any point
CLOSE	R,T	Replaces the keyword CLOSE
CN	R,T,PS	Compiler statement number. Can precede compiler inserted statements
CNVC1,--4	PS	Convert compiler functions 1=Drop all registers 2=Drop target register 3=Drop source register 4=Do not drop register
COL	R,T	Replaces the keyword COLUMN
COMA	T	Triple indicating an individual subscript in a subscript list
COMPLEX	R	Replaces the keyword COMPLEX
COMPILER ASSIGN	T	Code byte or triple indicating assignment
COMPILER FUNCTION	T	Code byte or triple used to indicate the start of a compiler function call argument list
COMPILER FUNCTION'	T	Triple indicating the end of a compiler function argument list
COMPILER FUNCTION CALL	T	Code byte or triple used to indicate the start of a compiler function call argument list
COMPILER FUNCTION CALL'	T	Triple indicating the end of a compiler function call argument list
COMPILER FUNCTION COMMA	T	Triple used to indicate the argument of compiler function, or Pseudo-Variable
COMPILER PSEUDO-VARIABLE'	T	Triple indicating the end of a compiler pseudo-variable argument list
COMPILER PSEUDO-VARIABLE	T	Code byte or triple used to indicate the start of a compiler pseudo-variable argument list
COMR	T	Triple indicating an individual subscript held in a register
CONDITION	R	Replaces the keyword CONDITION
CONTROLLED	R	Replaces the keyword CONTROLLED
CONTROL VARIABLE	R,T	Marker which indicates the control variable of a DO loop
CONVERSION	R	Replaces the keyword CONVERSION
COPY	R,T	Replaces the keyword COPY
CONTROL VARIABLE'	T	Triple which indicates the end of a control variable expression
DATA	R,T	Replaces the keyword DATA
DATA'	T	Triple indicating the end of a data directed I/O list
DATA LIST DO	R	Replaces the keyword DO in an iterative clause in a data list
DCF2	PS	Causes output of 'ERROR STOP' and the four bytes following in the pseudo-code item
DECIMAL	R	Replaces the keyword DECIMAL
DECLARE	R	Replaces the keyword DECLARE
DEFINED	R	Replaces the keyword DEFINED
DEFINED SUBSCRIPT	T	Marker which precedes the parenthesized iSUB subscript list of a defined array

DELAY	R,T	Replaces the keyword DELAY
DELETE	R,T	Replaces the keyword DELETE
DICTIONARY REFERENCE	T	Marker indicating that the following two bytes contain a symbolic dictionary reference
DIRECT	R	Replaces the keyword DIRECT
DISPLAY	R	Replaces the keyword DISPLAY
DO	R,T	Replaces the keyword DO, in a non-iterative DO group
DO EQUALS	R,T	Marker which replaces the PL/I'=' in the iterative DO statement (DO I=)
DROB	PS	Indicates to the register allocation phases that a base register used for addressing a controlled variable should be dropped
DROP	T	Triple used in optimization indicating the drop of an index register
DROP	PS	Indicates that a symbolic or assigned register in the operand field of the instruction is no longer required
DRPL	PS	Indicates the end of the use of a list of symbolic registers which have appeared in an USSL item
E	R,T	Floating decimal format item
EDIT	R,T	Replaces the keyword EDIT
EDIT'	T	Triple indicating the end of an edit directed I/O list
EIO	T	Code byte or triple which indicates the end of an I/O statement
ELSE	R,T	Replaces the keyword ELSE
END	R,T	Replaces the END keyword at the end of a BEGIN or PROCEDURE block
END BLOCK	R,T,	Indicates the end of a text block
END DO	R,T	Replaces the END keyword at the end of a non-iterative DO group
ENDFILE	R	Replaces the keyword ENDFILE
END ITDO	R,T	Replaces the END keyword at the end of an iterative DO loop
END LIST MARK	R	Marker used by phases GK and GP to indicate the end of a function argument list
END PROG	R,T,PS	Marks the end of program
END PROGRAM2	T,PS	Triple which marks the end of the second file text i.e. prologue initialization text, which is placed after the source program text
ENTRY	R	Replaces the keyword ENTRY
EPRM	PS	Indicates the start of an external library calling sequence. (Appendix D10)
EPRM'	PS	Indicates the end of an external library calling sequence
EQU	PS	Indicates that the two byte operand field contains a label. The label is considered to be attached to the following pseudo-code item
EQU'	PS	As for EQU, but indicates that control may enter from a different statement.

ERROR	R	Replaces the keyword ERROR
ERROR	T	Code byte or triple which marks the position of an erroneous source statement which has been deleted
ERROR	PS	Indicates the presence of a source program error
EVENT	R,T	Replaces the keyword EVENT
EXCLUSIVE	R	Replaces keyword EXCLUSIVE
EXIT	R,T	Replaces the keyword EXIT
EXTERNAL	R	Replaces the keyword EXTERNAL
F	R,T	Fixed decimal format item
F'	T	Triple which indicates the end of an F format item
F COMMA	T	Triple used to indicate the arguments of a function or pseudo variable
FILE	R,T	Replaces the keyword FILE
FILE	T	Triple indicating the end of a file list
FINISH	R	Replaces keyword FINISH
FIXED	R	Replaces the keyword FIXED
FIX BINARY IMAGINARY	R	Marker which precedes a fixed binary imaginary constant
FIX BINARY REAL	R	Marker which precedes a fixed binary real constant
FIX DECIMAL IMAGINARY	R	Marker which precedes a fixed decimal imaginary constant
FIX DECIMAL REAL	R	Marker which precedes a fixed decimal real constant.
FIXED OVERFLOW	R	Replaces keywords FIXED OVERFLOW
FLOAT	R	Replaces the keyword FLOAT
FLOAT BINARY IMAGINARY	R	Marker which precedes a float binary imaginary constant
FLOAT BINARY REAL	R	Marker which precedes a float binary real constant
FLOAT DECIMAL IMAGINARY	R	Marker which precedes a float decimal imaginary constant
FLOAT DECIMAL REAL	R	Marker which precedes a float decimal real constant
FORMAT	R,T	Replaces the keyword FORMAT
FORMAT'	T	Triple which marks the end of a remote format statement
FORMAT LIST	R,T	Precedes a format list
FORMAT LIST'	T	Triple indicating the end of a format list
FREE	R,T,PS	Replaces the keyword FREE
FROM	R,T	Replaces the keyword FROM
FUNCTION	T	Code byte or triple indicating the start of a function argument list
FUNCTION	R	Marker which precedes the parenthesized argument list (if present) of an entry name in a function reference or CALL statement
GENERIC	R	Replaces the keyword GENERIC
GET	R,T	Replaces the keyword GET
GOOB	R,T	GOTO out of block statement marker
GOLN	T	Indicates a branch to a label number
GOTO	R,T	GOTO in block statement marker

IDENT	R,T	Replaces the keyword IDENT
IF	R,T	Replaces the keyword IF
IF'	T	Triple which terminates an IF expression
IGN 2..8		Ignore markers used by Final Assembly when code has been made redundant. The final digit indicates length to be ignored.
IGNORE	R,T	Replaces the keyword IGNORE
IGNORE	PS	Pseudo-code item which indicates that the number of bytes appearing in the length count must be ignored
IN	R/T	Replaces the keyword IN
INITIAL	R	Replaces the keyword INITIAL
INITIAL LABEL	R	Marker which precedes elements of arrays of labelvariables which are initialized by being attached to statements
INITVAR	R	Replaces the keyword INITIAL(iteration factors)
INPUT	R	Replaces keyword INPUT
INST	PC	Defines a store generated by register allocator which may be deleted by phase TF if unused
INTEGER	R	Marker which precedes an internal binary integer constant
INTERNAL	R	Replaces the keyword INTERNAL
INTO	R,T	Replaces the keyword INTO
IPRM	PS	Indicates the end of an internal library calling sequence
ITDO	R,T,PS	Replaces the keyword DO in an iterative DO loop
ITDO'	T,PS	Triple which terminates an iterative DO expression
JMP	T	Triple indicate the presence of pseudo-code. The number of bytes of pseudo-code is specified in the first operand
KEY	R,T	Replaces the keyword KEY
KEYED	R	Replaces keyword KEYED
KEYFROM	R,T	Replaces the keyword KEYFROM
KEYTO	R,T	Replaces the keyword KEYTO
LABEL	R	Replaces the keyword LABEL
LEFT	T	Triple indicating a temporary result for a pseudo-variable
LIKE	R	Replaces the keyword LIKE
LINE	R,T	Replaces the keyword LINE
LINESIZE	R,T	Replaces the keyword LINESIZE
LIST	R,T	Replaces the keyword LIST
LIST'	T	Triple indicating the end of a list directed I/O list
LIST MARK	T	Marker used by Phases GK and GP to indicate the start of function argument list
LITERAL CONSTANT	R,T	Indicates that the following two bytes contain a fixed binary constant
LOCATE	R,T	Replaces the keyword LOCATE
MAIN	R	Replaces keyword MAIN
MDRP	PC	Defines a register which will be

		multiply dropped. Phase RA no-ops all DROP's for this register except the last
MULTIPLE ASSIGN	R,T	Marker indicating multiple assignment (Replaces PL/I',')
MVCL	PC	Defines a character move greater than 256 bytes. This is expanded by phase QF
NAME	R	Replaces the keyword NAME in the context of ON NAME
NEW PAGE	R	Replaces the keyword NEW PAGE
NOCHECK	R	Replaces the keyword NOCHECK
NO SNAP	R,T	Replaces the keyword NOSNAP
NOSNAP'	T	Triple which indicates the end of a NOSNAP list
NULL	R,T	Null statement marker
NULL-FUNCTION	T	Enables TMPD's to be passed in text by phases LB and LG before the evaluation phase LS
OFFSET	R	Replaces the keyword OFFSET
OPEN	R,T	Replaces the keyword OPEN
OFS	T	Triple indicating offset used in optimization of DO loops
ON	R,T	Replaces the keyword ON
OPTIONS	R	Replaces the keyword OPTIONS
ON RECORD	R	Replaces the keyword RECORD in the context ON RECORD
OSM1	PS	Indicates that the two byte operand field contains an index register
OSM2	PS	Indicates that the two byte operand field contains a leteral offset
OSM3	PS	Indicates the presence of a literal offset and an index register
OUTPUT	R	Replaces keyword OUTPUT
OVERFLOW	R	Replaces keyword OVERFLOW
P	AR,T	Picture format item
P'	T	Triple which indicates the end of a P format item
PAGE	R,T	Picture format item
PAGESIZE	R,T	Replaces the keyword PAGESIZE
PASS	PS	POINTER Assignment
PCBS	PS	Indicates the end of the complete prologue for a procedure block
PCC	PS	Follows a PROC or BEGIN marker. Used to carry the prefix change byte for the block.
PFMT	PS	PICTURE format
PICTURE	R	Replaces the keyword PICTURE
PINS	PS	Indicates the prologue insertion point
PLBS	PS	Indicates the start of the prologue for a procedure block which is common to all entry points
PLBS'	PS	Indicates the end of the prologue of a procedure block which is common to all entry points
POINTER	R	Replaces the keyword POINTER
PRECISION1	R	Indicates a precision which has been written in the source program as '(10)', which may be either fixed or float

PRECISION2	R	Indicates a precision which has been written in the source program as '(5,2)' which implies fixed
PRINT	R	Replaces keyword PRINT
PRIORITY	R,T	Replaces the keyword PRIORITY
PSEUDO-VARIABLE	R	Marker which precedes the parenthesized argument list to a pseudo-variable
PSEUDO-VARIABLE	T	Code byte or triple indicating the start of a pseudo-variable argument list
PSEUDO-VARIABLE'	T	Triple indicating the end of a pseudo-variable argument list
PSLD	PS	Indicates a pseudo-code instruction for use by the final assembly listing phase
PROC	R,T PS	Replaces the keyword PROCEDURE
PROC'	T.PS	Triple which terminates the procedure block triples
PTCH	T	Patch triple. Used by optimization phase to overwrite a triple in text at a point where code is to be inserted. The code to be inserted and the overwritten triple are held in a table in text blocks
PUT	R,T	Replaces the keyword PUT
R	R,T	Remote format statement marker
READ	R,T	Replaces the keyword READ
REAL	R	Replaces the keyword REAL
RECORD	R	Replaces the keyword RECORD
RECURSIVE	R	Replaces the keyword RECURSIVE
REENTRANT	R	Replaces the keyword REENTRANT
REPLY	R,T	Replaces the keyword REPLY
RETURN	R,T	Replaces statement marker
REVERT	R,T	Replaces the keyword REVERT
REWRITE	R,T	Replaces the keyword REWRITE
RPL	T	Code byte or triple indicating the start of a format list replication factor expression
RPL'	T	Triple indicating the end of a format list replication factor expression
RWA	PS	Indication of an addressing vector for use by the register allocator when the number of symbolic registers in use exceeds the amount of work space which has been allocated
SECONDARY	R	Replaces keyword SECONDARY
SECOND LEVEL MARKER	R	A code byte which immediately precedes all code bytes appearing in the second level table
SELL	T,PS	Code byte or triple which indicates that a temporary variable is no longer required
SET	R,T	Replaces the keyword SET
SETS	R	Replaces the keyword SETS
SEQUENTIAL	R	Replaces the keyword SEQUENTIAL
SIGNAL	R,T	Replaces the keyword SIGNAL
SIZE	R	Replaces the keyword SIZE

SKIP	R,T	Replaces the keyword SKIP
SL	R,T,PS	Statement label marker. Precedes all labelled statements
SN	R,T,PS	Statement number marker. Precedes all unlabelled statements
SN2	R,T,PS	Marker which precedes a second file statement (See Appendix D.8)
SN3	PS	Indicates the start of a second file statement which is concerned with initializing array, or structure, or string dope vectors. Similar to SN2 (Appendix D.8) except that there is no associated entry
SNAP'	T	Triple which indicates the end of a snap list
STATIC	R	Replaces the keyword STATIC
STERLING DECIMAL REAL	R	Marker which precedes a sterling decimal constant
STOP	R,T	Replaces the keyword STOP
STREAM	R	Replaces keyword STREAM
STRING	R,T	Replaces the keyword STRING
STRING'	T	Triple indicating the end of a string list used with list directed I/O
STRINGRANGE	R	Replaces the keyword STRINGRANGE
SUB	R	Replaces the keyword SUB used in iSUB DEFINING marker preceding a BIT
SUBSCRIPT	R,T	Marker which precedes the parenthesized subscript list of an array
SUBSCRIPT'	T	Triple indicating the end of a subscript list
SUBSCRIPT-RANGE	R	Replaces keyword SUBSCRIPTRANGE
SSB'	T	Supersubs prime triple. Similar to SUBS'. Used by Optimization phases in conjunction with SSUB
SSUB	T	Supersubs triple. Similar to SUBS. Used by Optimization phases
SYSTEM	R,T	Replaces the keyword SYSTEM
SYSTEM'	T	Triple which indicates the end of a system list
TASK	R,T	Replaces the keyword TASK
THEN	R,T	Replaces the keyword THEN
TITLE	R,T	Replaces the keyword TITLE
TMPD	T	Triple indicating a temporary expression result
TO	R,T	Marker replacing TO in the iterative DO statement
TO'	T	Triple which indicates the end of a TO expression
TRANSMIT	R	Replaces the keyword TRANSMIT
UNBUFFERED	R	Replaces the keyword UNBUFFERED
UNDEFINEDFILE	R	Replaces the keyword UNDEFINEDFILE
UNDERFLOW	R	Replaces keyword UNDERFLOW
UNLOCK	R,T	Replaces the keyword UNLOCK
UPDATE	R	Replaces keyword UPDATE
USES	R	Replaces the keyword USES
USNG	PS	Indicates the

		presence of an assigned register
USSL	PS	Indicates a list of symbolic registers which need not be saved on branch and branch and link instructions
VARYING	R	Replaces the keyword VARYING
WHILE	R,T	Replaces the keyword WHILE
WHILE'	T	Triple which indicates the end of a WHILE expression
WRITE	R,T	Replaces the keyword WRITE
X	R,T	Spacing format item
ZERODIVIDE	R	Replaces the keyword ZERODIVIDE

The (F) Compiler requires main storage for the following purposes :

Compiler processing phases

Print buffers

Compiler control routines

Dictionary area

Text area

Input/Output buffers

Input/Output routines (BSAM)

The main storage required by each phase of the compiler need be contiguous only for each control section.

During the read-in phases a minimum of two dictionary blocks and two text blocks is available in storage simultaneously.

During the optimization logical phase, a minimum of three dictionary and five text blocks are available in storage simultaneously.

During the rest of the compilation four dictionary blocks and four text blocks are available in storage simultaneously.

The dictionary and text block size is chosen according to the amount of main storage available to the compiler. The SIZE option, interpreted at invocation time, provides the value used to determine the block size. The space needed for large I/O buffers is subtracted from SIZE and the space remaining is used when determining text and dictionary block size, as detailed in the publication IBM System/360 PL/I (F) Programmer's Guide. A table contained in Phase AB is searched, using the SIZE option as an argument. When the correct entry is found, the block size is extracted.

The first table shows the relationship between the compiler requirements and the text and dictionary block sizes. The second table details the storage allocation in each environment.

Environment	Dictionary/Text Block Size	Compiler Requirements
A	1K	44K - 56K
B	2K	56K - 72K
C	4K	72K - 132K
D	8K	132K - 168K
E	16K	168K

Compiler Requirements and Dictionary/Text Block Relationship

Storage Allocation	DURING READ-IN PHASE					AFTER READ-IN PHASE				
	ENVIRONMENT					ENVIRONMENT				
	A	B	C	D	E	A	B	C	D	E
OS Dynamic Storage										
TIOT	228	228	228	228	228	228	228	228	228	228
SPIE	32	32	32	32	32	32	32	32	32	32
LOAD	40	40	40	40	40	40	40	40	40	40
OS Temporary Storage										
End of Volume	800	800	800	800	800	800	800	800	800	800
Data Management	4894	4894	4894	4894	4894	4894	4894	4894	4894	4894
Compiler Control	12266	12266	12266	12266	12266	12266	12266	12266	12266	12266
Phase Area	16384	16384	16384	16384	16384	12288	12288	12288	12288	12288
Text Area	2048	8192	16384	32768	65536	4096	8192	16384	32768	65536
Dictionary Area	2048	8192	16384	32768	65536	4096	8192	16384	32768	65536
Scratch Storage	4096	4096	4096	4096	4096	4096	4096	4096	4096	4096
I/O Buffers	1538	1538	1538	1538	1538	1538	1538	1538	1538	1538
TOTALS	44374	56662	73038	105814	171340	44374	52566	68950	101718	167254

Initially, four text and four dictionary blocks are allocated to the compiler (two each are allocated when only 44K bytes of storage are available to the compiler. This is then expanded to four of each at the end of the read-in phase). If the text and/or dictionary expands to fill these blocks, more main storage is allocated as blocks. This process continues until the spill point is reached (i.e., until all the main storage available to the compiler has been used). If still more main storage is required, the spill file (SYSUT1) is opened, and blocks are written out.

The communications region is an area specified by the control routines (see Appendix L), and used to communicate necessary information between the various phases of the compiler. The communications region is resident in the first dictionary block throughout the compilation.

Note: The use of the communications region during compile-time processing is described in Appendix J.

The tables below give the following information for each location of the communications region: name of location; offset (i.e., relative address); use (i.e., stages of compilation during which the location is in use); and a description of the contents. Certain locations are used in one capacity during part of the compilation, and then re-used in a different capacity during another part of the compilation. In these cases, one location will have two table entries: details of alternative usage appear in the columns headed $Name_2$, Use_2, etc.

Table 1. Communications Region

Name	Offset (Dec.)	Use	Description
SAVE0	0	ALL PHASES	Register save area
SAVE1	SAVE0+4	ALL PHASES	Register save area
SAVE2	SAVE0+8 ETC.	ALL PHASES	Register save area
.	.	.	.
.	.	.	.
.	.	.	.
.	.	.	.
SAVE15	SAVE0+60	ALL PHASES	Register save area
ZTV	64	ALL PHASES	Control phase base
ZTRAN1	68	ALL PHASES	External to internal translate table
ZTRAN2	ZTRAN1+4	ALL PHASES	Internal to external translate table
ZNXTD	76	ALL PHASES	Next available dictionary location
ZERRD	80	ALL PHASES	
ZERRS	ZERRD+4	ALL PHASES	First locations of error chains
ZERRW	ZERRD+8	ALL PHASES	
ZERRC	ZERRD+12	ALL PHASES	
ZDNXT	ZERRD+16	ALL PHASES	
ZSNXT	ZDNXT+4	ALL PHASES	Current ends of error chains
ZWNXT	ZDNXT+8	ALL PHASES	
ZCNXT	ZDNXT+12	ALL PHASES	
ZMYNAM	112	ALL PHASES	Name of last phase entered
DICTP	116	ALL PHASES	
ZCNCHR	118	ALL PHASES	Source column containing control character
ZPROCH	120	ALL PHASES	Chain of created procedures
ZSTAT	124	ALL PHASES	Current statement number
PAR1	128	ALL PHASES	Parameter word 1
PAR2	PAR1+4 ETC.	ALL PHASES	Parameter word 2
.	.	.	.
.	.	.	.
.	.	.	.
PAR8	PAR1+28	ALL PHASES	Parameter word 8
CORLFT	160	ALL PHASES	Amount of core left for compilation
LKNAME	164	PHASE VE	Member name of module produced by compilation
ZOBSAD	172	ALL PHASES	Address of overflow block
TERMSW	176	ALL PHASES	Compilation terminating switch
OFDNAM	178	ALL PHASES	
SPLNAM	180	ALL PHASES	Name of phase in control when spill file is opened
ZOBNUM	182	ALL PHASES	Overflow block number
SCNOP	184	ALL PHASES	Phase directory scan switch
SCCNF	185	ALL PHASES	On if in second half of compiler
ZDROLF	186	ALL PHASES	Overlay switch
AREA	187	ALL PHASES	Code word for dummy routines (phase AD)
ZM91	188	ALL PHASES	(used for Model 91 systems)
PERRSW	189	ALL PHASES	Print error switch
BERSW	190	ALL PHASES	*process error byte
IOERSW	191	ALL PHASES	I/O error switch
ZPAGE	192	ALL PHASES	Number of lines in page
ZLINE	194	ALL PHASES	Number of characters in a line
ZOPT	196	ALL PHASES	Code word of loading of optimizing phases
PARMLEN	197	ALL PHASES	Length of options field in * - process card
MAXFON	198	ALL PHASES	Number of offset slots in a dictionary block
ZDICTSP	200	ALL PHASES	Useful dictionary block size

Note: If a program interrupt occurs both LKNAME and CORLFT are overwritten by the interrupt PSW.

Table 1. Communications Region (cont'd)

Name	Offset (Dec.)	Use	Description
ZNXTOF	204	ALL PHASES	Offset of next dictionary entry
FONOF	208	ALL PHASES	Offset of offset slots in dictionary block
FSTDRF	212	ALL PHASES	Dictionary reference of last dictionary entry
ERCODE	224	ALL PHASES	Error message codes
MCSIZE	228	ALL PHASES	M/CSIZE this run
CCCODE	232	ALL PHASES	Control card requests (see table 4 below)
HDR	236	ALL PHASES	Address of phase directory
TLR	240	ALL PHASES	Timer last read
TRT	244	ALL PHASES	Total run time
ARINT	248	ALL PHASES	Arithmetic interrupt
BR2	252	ALL PHASES	Second base for control phase
STARTX	256	ALL PHASES	Start of text
DICTSZ	260	ALL PHASES	Dictionary block size
TXTSZ	264	ALL PHASES	Space available in text block
RDSIZE	268	ALL PHASES	SIZE of read area
INCOD	272	ALL PHASES	Interrupt code
ARMASK	273	ALL PHASES	Arithmetic error mask
LOCK	274	ALL PHASES	Dictionary lock slot
ZNXTLC	276	ALL PHASES	End of current text
ZSHIFT	280	ALL PHASES	Number of bits in dictionary reference offset
ZMASK	284	ALL PHASES	Mask to remove block numbers
ZMASK1	ZMASK + 2	ALL PHASES	Mask to remove offset
ZSOR	288	ALL PHASES	Input record source
ZMAG	290	ALL PHASES	Input record margin
CCCODEE	292	ALL PHASES	Control card requests
ZCOMM	304	ALL PHASES	

Table 2. Communications Region

Name	Dec. Offset	Use		Description	$Name_2$	Use_2		$Description_2$
		Start	End			Start	End	
ZCALLC	ZCOMM+ 0	Read in	BCD to Dict. Ref.	Start of CALL chain				
ZLABTB	+ 4	Read in	Initial	Start of label chain				
ZATTID	+8			Pointer to attribute tidy-up area	ZPCOP			
ZALLCH	+12	Read in	ALLOCATE + Attribute	Start of ALLOCATE chain				
ZFLAG1	+16	Read in	Dictionary	Flag bytes, mainly used for optional phase marking (see table 3 below)	ZSYSOT	Pseudo code	Pseudo code	Dict. Ref. SYSOUT
ZFLAG2	+17							
ZFLAG3	+18							
ZELAG4	+19							
ZFLAG5	+20							
ZFLAG6	+21	FU	QU	Unaligned (see Table 3)				
UNUSED	+21 TO +23							
ZSCRCH	+24	PD	PL	Address of scratch core kept across phases				
UNUSED	+25 TO +27							
ZHASH	+28	Dictionary	Dictionary	Start of hash table	ZINCL	PC.	End	INCLUDE card pointer
	+32	Not used	Not used		ZEQTA3	Final	Assy.	Assigned offset table
ZFATTB	+36	Dictionary	Declare pass 2	Start of factored attribute	ZLCONS ZEOCS	Strge	Alloc	Last constant in STATIC. End of STATIC
ZCDIMC	+40	Dictionary	Pre-translator	Start constant dimension	ZSMREG	Trans-lator	Pseudo code	Current symbolic register
Z2FILE	+44	Dictionary	End	Start of second file				
ZDLFST	+48	Dictionary	Storage allocator	Defined storage area	ZFSTEX	Strge alloc	End	First external item
ZDCBLD	+52	Dictionary	Dictionary	Dictionary build area	ZPRSIZ	Final	Assy.	Size of compiled program
ZMPSTK	+56	Dictionary	Translator	Program map stack	ZSICSZ	Final	Assy.	STATIC INTERNAL size
ZUPIC	+60	Dictionary	Picture processor	Start of picture chain	ZSTALC	Final	Assy.	Storage location counter
ZPROC1	+64	Dictionary	End	Start of entry type 1 chain				
ZSTACH	+68	Dictionary	End	Start of STATIC chain (6)				
ZVDIMC	+74	Dictionary	Translator	Start of variable dimension chain				
ZCONCH	+78	Dictionary	ALLOCATE	Start of constants chain				
ZDEFCH	+80	Dictionary	Dictionary	Chain of defined items	ZCITEM	Pre trans.	End	Chain of CONTROLLED items
ZLIKCH	+82	Dictionary	Dictionary	Chain of LIKE items	ZEQMAX	Pseudo code	End	Max. label number

Table 2. Communications Region (cont'd)

Name	Dec. Offset	Use		Description	$Name_2$	Use_2		$Description_2$
		Start	End			Start	End	
ZPOLCH	+84	Dictionary	Dictionary	Chain of POOL items	ZOSMRG	Pseudo code	Pseudo code	End of optimization symbolic registers
ZDCOM1	ZCOMM+86	Dictionary	Dictionary	Latest dict. ref.	ZCOBOL	GB	JI	Head of COBOL structure chain
ZDCOM2	+90	Dictionary	Dictionary	Flags for dictionary build interface (8 bytes)				
ZDSA	ZCOMM+94	PA	UD	Head of STATIC DSA chain				
ZCPOFF	ZCOMM +100	PD	UA	Offset of first constants pool within static internal.				
MACRON	ZCOMM +336	BW	TP	Macro reqd count (halfword)				
SOURCN	ZCOMM +338	CI	TP	Source reqd count (halfword)				
STMNTN	ZCOMM +340	CI	TP	Source stmt count (halfword)				
INSTRN	ZCOMM +342	TJ	TP	Object instn count (halfword)				
BYTESN	ZCOMM +344	TO	TP	Object byte count (fullword)				
ZSAV	ZCOMM +360	Resident Control	Resident Control	Register save area (18 fullwords)				

NOTE: Bytes ZCOMM+60 to ZCOMM+332 are used internally within the Read-in phase and cannot be assumed to be zero at exit from that phase.
Bytes ZCOMM+336 to ZCOMM+344 are not available for re-use
Bytes ZCOMM+104 to ZCOMM+131 are used by the generic phase IM. They are cleared before exit from the phase.

Table 3. Communications Region. Bit Usage in ZFLAGS

BYTE NAME	OFFSET	BIT (HEX)	BIT NAME	DESCRIPTION Bits are set on, on encountering:-
ZFLAG1	ZCOMM+16	80	ZDEFFL	DEFINED attribute
		40	ZAWAFL	ALLOCATE statement
		20	ZSECFL	Second File statement
		10	ZDIMFL	Dimension attribute
		08	ZCHKFL	CHECK/NOCHECK prefix
		04	ZONFL	ON, SIGNAL or REVERT statement
		02	ZSTRFL	Structure
		01	ZDECFL	DECLARE statement
ZFLAG2	+17	80	ZLIKFL	LIKE attribute
		40	ZINTST	STATIC INITIAL
		20	ZOPCFL	OPEN/CLOSE statement
		10	ZGTPFL	GET/PUT statement
		08	ZGOTFL	GO TO statement
		04	ZTEPFL	TASK/EVENT/PRIORITY options, REPLY statement
		02	ZPICFL	PICTURE attribute/format item
		01	ZISBFL	iSUB defining
ZFLAG3	+18	80	ZCONTG	UNALIGNED(NONSTRING) attribute
		40	ZSETFL	SETS attribute
		20	ZOSSFL	DELAY, DISPLAY, WAIT statement
		10	ZARGFL	Argument list
		08	ZINLFL	INITIAL Label
		04	ZDIOFL	DATA directed I/O
		02	ZRECIO	RECORD I/O
		01	ZINTAC	AUTO/CTL initialization
ZFLAG4	+19	80	ZFREE	FREE statement
		40	STM256	More than 256 statements
		20	FILEFL	Files present
		10		Spare
		08	ZPUTFL	PUT DATA
		04	ZGETFL	GET DATA
		02	ZPTRFL	Pointer Qualifier
		01	ZRODFL	STATIC DSA Entry
ZFLAG5	+20	80	ZFTASK	TASK/EVENT/PRIORITY option on a CALL statement
		40	ZDENFL	Set by FT
		20	ALCSLM	ALLOCATE, with second level marker
		10		Spare
		08		Spare
		04		Spare
		02		Spare
		01		Spare
ZFLAG6	+21	80	ZUNAFL	ON for unaligned data: set by FU
		40		Spare
		20		Spare
		10		Spare
		08		Spare
		04		Spare
		02		Spare
		01		Spare

Table 4. Communications Region. Bit usage in CCCODE.

Byte	Bit	
0	0	DUMP 1 wanted 0 not wanted
	1	1 abort has occurred
	2	LIST 1 not wanted 0 wanted
	3	LOAD 1 not wanted 0 wanted
	4	DECK 1 not wanted 0 wanted
	5	EXTREF 1 not wanted 0 wanted
	6	XREF 1 not wanted 0 wanted
	7	ATR 1 not wanted 0 wanted
1	0	1 means U-format 0 means F-format records on input
	1	1 if track overflow is present
	2	Severity code
	3	Severity code
	4	Severity code
	5	Severity code where 0000=FLAGW 0001=FLAGE 0010=FLAGS
	6	CHAR 48 1 not wanted 0 wanted
	7	MACRO 1 not wanted 0 wanted
2	0	SOURCE 1 not wanted 0 wanted
	1	CHK 1 not wanted 0 wanted
	2	BCD 1 BCD input 0 EBCDIC input
	3	SOURCE2 1 wanted 0 not wanted
	4	OPT 1 wanted 0 not wanted
	5	1 AE required
	6	1 program check has occurred
	7	1 means first record has been read
3	0	STMT 1 not wanted 0 wanted
	1	MACDCK 1 not wanted 0 wanted
	2	COMP 1 not wanted 0 wanted
	3	1 macro phase now running
	4	1 batch record found 0 batch record not found
	5	1 EOF record found 0 EOF record not found
	6	not used requirement
	7	NEST 1 wanted 0 not wanted

For full details of the system generation process, see IBM System/360 Operating System: System Generation, Form C28-6554.

During the system generation process, a control section named IEMAF (see Figure 13) is assembled containing a table consisting of a bit string field that is fourteen bytes in length, immediately followed by seven fixed-point values aligned on full-word boundaries. The first five fixed-point values are related to the compiler options LINECNT, SIZE, SORMGIN (start), SORMGIN (end), and PAGECTL (control column) respectively. The remaining two fixed-point values are spare fields not currently in use. Bits 0 to 25, 28 to 46 and 51 to 53 in the string are used to specify the default status of the options. (Note: bit 51 is used for both default and delete.) Bits 54 to 81, and 83 to 102 in the string are used to specify whether an option keyword is to be deleted or not. A "1" in the bit string means "yes" and a "0" means "no". The remaining bits in the string are spare bits not currently in use. Figure 14 shows the bit identification table associated with the control section.

```
IEMAF    START
         DC B'0 0 0 0 0 0 0 0  0 0 0 0 0 0 0 0 '     DEFAULT
         DC B'0 0 0 0 0 0 0 0  0 0 0 0 0 0 0 0 '     SWITCHES
         DC B'0 0 0 0 0 0 0 0  0 0 0 0 0 0 0 0 '
         DC B'0 0 0 0 0 0 0 0 0 0  0 0 0 0 0 0 '     DELETE
         DC B'0 0 0 0 0 0 0 0 0 0  0 0 0 0 0 0 '     SWITCHES
         DC B'0 0 0 0 0 0 0 0 0 0  0 0 0 0 0 0 '
         DC B'0 0 0 0 0 0 0 0 0 0 0  0 0 0 0 0 '     SPARE SWITCHES
         DC F'60'
         DC F'999999'
         DC F'2'
         DC F'72'
         DC F'0'
         DC F'0'
         DC F'0'
```

•Figure 13. The IEMAF Control Section

Bit	Parameter	Bit	Paramter	Bit	Parameter
0	ATR	38	NONEST	75	DELETE=SOURCE2
1	NOATR	39	COMP	76	DELETE=NOSOURCE2
2	BCD	40	NOCOMP	77	DELETE=OPT
3	EBCDIC	41	OBJIN	78	DELETE=LINECNT
4	CHAR60	42	OBJOUT	79	DELETE=LINELNG
5	CHAR48	43	MACDCK	80	DELETE=SIZE
6	DECK	44	NOMACDCK	81	DELETE=SORMGIN
7	NODECK	45	EXTDIC	82	Not used
8	EXTREF	46	NOEXTDIC	83	DELETE=STMT
9	NOEXTREF	47	Not used	84	DELETE=NOSTMT
10	FLAGW	48	Not used	85	DELETE=MACRO
11	FLAGE	49	Not used	86	DELETE=NOMACRO
12	FLAGS	50	Not used	87	DELETE=COMP
13	LIST	51	DEFAULT/DELETE	88	DELETE=NOCOMP
14	NOLIST		(Bit always 0)	89	DELETE=OBJIN
15	LOAD	52	LIB=REAL	90	DELETE=OBJOUT
16	NOLOAD	53	LIB=COMPLEX	91	DELETE=PAGECTL
17	XREF	54	DELETE=ATR	92	DELETE=MACDCK
18	NOXREF	55	DELETE=NOATR	93	DELETE=NOMACDCK
19	SOURCE	56	DELETE=BCD	94	DELETE=EXTDIC
20	NOSOURCE	57	DELETE=EBCDIC	95	DELETE=NOEXTDIC
21	SOURCE2	58	DELETE=CHAR60	96	DELETE=OPLIST
22	NOSOURCE2	59	DELETE=CHAR48	97	DELETE=NOOPLIST
23	OPT=0	60	DELETE=DECK	98	DELETE=NEST
24	OPT=1	61	DELETE=NODECK	99	DELETE=NONEST
25	OPT=2	62	DELETE=EXTREF	100	DELETE=SYNCHKE
26	Not used	63	DELETE=NOEXTREF	101	DELETE=SYNCHKS
27	Not used	64	DELETE=FLAGW	102	DELETE=SYNCHKT
28	SYNCHKE	65	DELETE=FLAGE	103	Not used
29	SYNCHKS	66	DELETE=FLAGS	104	Not used
30	SYNCHKT	67	DELETE=LIST	105	Not used
31	OPLIST	68	DELETE=NOLIST	106	Not used
32	NOOPLIST	69	DELETE=LOAD	107	Not used
33	STMT	70	DELETE=NOLOAD	108	Not used
34	NOSTMT	71	DELETE=XREF	109	Not used
35	MACRO	72	DELETE=NOXREF	110	Not used
36	NOMACRO	73	DELETE=SOURCE	111	Not used
37	NEST	74	DELETE=NOSOURCE		

•Figure 14. Bit Identification Table

APPENDIX H: CODE PRODUCE FOR PROLOGUES AND EPILOGUES

The mechanism of dynamic storage management is described in the publication IBM System/360 Operating System, PL/I Subroutine Library Program Logic Manual.

Part of the code required to implement the storage management is generated as prologue and epilogue code by the compiler. This Appendix contains annotated examples of prologues and epilogues for PROCEDURE, BEGIN, and ON blocks.

PROLOGUES AND EPILOGUES

Example in PL/I

```
A:I: PROCEDURE(X,Y);
     DECLARE Y CONTROLLED;
       .
       .
       .
     ON OVERFLOW C=0;
       .
       .
       .
B: BEGIN;
       .
       .
       .
   END;
       .
       .
       .
AB:IJK: ENTRY(Y,Z)
       .
       .
       .
     RETURN(EXPRESSION)
       .
       .
       .
   END;
```

```
A        BC    15,16,(0,15)          BRANCH ROUND FOLLOWING CONSTANTS
         DC    A11(1)                LENGTH OF BCD
         DC    C'A'                  BCD OF ENTRY POINT
SIZDSA   DC    F' SIZE OF DSA'
STATIC   DC    A(STATIC CONTROL      ADDRESS OF STATIC INTERNAL CONTROL SECTION
               SECTION)              (ONLY COMPILED FOR EXTERNAL AND ON PROLOGUES)
         STM   14,11,12,(13)         SAVE STANDARD REGISTERS IN SAVE AREA OF
         *                           CALLER'S DSA
         LR    10,15                 SET UP FIRST PROLOGUE BASE
         BAL   8,GETDSA(0,10)        CALL ROUTINE TO GET DSA
         MVI   SWITCH(13),X'X1'      INSERT RETURN (EXPRESSION) SWITCH
*                                    (ONLY COMPILED IF THERE IS A RETURN (EXP)
*                                    AND THE ENTRY LABELS HAVE DIFFERENT DATA
*                                    ATTRIBUTES)
         BC    15,COPRAM1(0,10)      BRANCH TO COPY OVER PARAMETERS
```

```
I         BC    15,10(0,15)           BRANCH ROUND FOLLOWING CONSTANTS
          DC    AL1(1)                LENGTH OF BCD
          DC    C'I'                  BCD OF ENTRY POINT
ADPRIM    DC    A(A)                  FIRST PROLOGUE BASE ADDRESS
          STM   14,11,12(13)          SAVE STANDARD REGISTERS IN SAVE AREA OF
*                                     CALLER'S DSA
          L     10,ADPRIM(0,15)       SET UP FIRST PROLOGUE BASE
          LA    8,IP(0,10)            SET RETURN REGISTER
GETDSA    L     11,STATIC(0,10)       SET UP STATIC DATA POINTER (ONLY IN
*                                     EXTERNAL PROCEDURES AND ON PROLOGUES)
          L     0,SIZDSA(0,10)        GR0=SIZE OF DSA
          L     15,32,(0,11)          LOAD GR15 WITH ENTRY POINT OF IHESADA
*                                     (UNLESS DSA IS IN STATIC, WHEN ENTRY POINT OF
*                                     COMPILER'S 'GET DSA' ROUTINE WILL BE LOADED)
          BALR  14,15                 CALL ROUTINE TO GET A NEW DSA
          LR    14,13                 POINT GR14 AT NEW DSA
          LA    0,7,(0,0)             SET LOOPING VALUE = 7
          SR    15,15                 CLEAR INDEXING REGISTER
LOOP      A     14,0(0,11)            BUMP GR14 BY 4096
          ST    14,ADVEC+4(15,13)     STORE GR14 IN ADDRESSING VECTOR
          LA    15,4(0,15)            BUMP INDEX REGISTER
          BCT   0,LOOP(0,10)
          BCR   15,8                  BRANCH ON RETURN REGISTER
IP        MVI   SWITCH(13),X'X2'      INSERT RETURN (EXP) SWITCH
COPRAM1   L     14,0(0,1)             PICK UP FIRST ARGUMENT ADDRESS AND
          ST    14,X(0,13)            STORE IN X IN DSA
          L     14,4(0,1)             PICK UP SECOND ARGUMENT ADDRESS
          LA    0,10(0,0)
          SR    14,0                  POINT GR14 AT PSEUDO-REGISTER OFFSET OF
          LH    14,0(0,14)            ARGUMENT AND PICK IT UP
          ST    14,Y(0,13)            STORE OFFSET IN Y IN DSA
          L     14,8(0,1)             PICK UP ADDRESS OF TARGET FIELD
          ST    14,TARGET(0,13)       AND STORE IN DSA
          L     10,A...A(0,11)        LOAD GR10 FROM TRANSFER VECTOR SLOT
*                                     FOR ENTRY POINT A IN STATIC.
          BAL   8,COMMON(0,10)        BRANCH AND LINK TO COMMON PROLOGUE
*         BCR   15,10                 BRANCH TO THE APPARENT ENTRY POINT
*                                     FOR A
COMMON    MVI   96(13),X'80'          SET DSA TASKING FLAG (ONLY COMPILED
*                                     IF TASKING IN COMPILATION)
          BALR  10,0                  SET UP COMMON PROLOGUE BASE
          LA    9,ADDAREA(0,13)       SET GR9 TO POINT TO ADDRESSING AREA
*                                     AT END OF DSA
          ST    9,ADVEC(0,13)         AND STORE IN ADDRESSING VECTOR.


*****
*
*               THE FOLLOWING CODE APPEARS
*         ONLY IN THE CASE OF RECURSIVE PROCEDURES
*
          L     14,PR...A(12)         LOAD GR14 WITH THE CURRENT DISPLAY
*                                     VALUE FOR A
          ST    14,92(0,13)           STORE IN DISPLAY UPDATE IN DSA
          LA    14,PR...A(12)
          SR    14,12                 GR14 = OFFSET OF DISPLAY PSEUDO-REGISTER
          ST    14,88(0,13)           STORE IN DISPLAY UPDATE IN DSA
*
*****



*               INITIALIZE ON SLOTS (IF ANY)
          MVI   0(13),X'8F'           IDENTIFY DSA.


*               COPY SKELETON DOPE VECTORS (IF ANY) FROM STATIC INTERNAL
*         CONTROL SECTION TO REAL DOPE VECTORS IN DSA. (THERE IS ALWAYS A
```

```
*        SKELETON FOR A REAL DOPE VECTOR), AND RELOCATE THE ADDRESSES WITH THE
*        ADDRESS OF THE DSA FOR THOSE DOPE VECTORS REFERRING TO VARIABLES
*        IN THE DSA.



*             FOR EACH VDA (VARIABLE DATA AREA) REQUIRED BY THE
*        PROCEDURE THE CODE BETWEEN THE LABELS VDA1 AND VDA2 IS
*        GENERATED



VDA1     SR    7,7                    CLEAR STORAGE ACCUMULATOR AC1
         SR    0,0                    CLEAR SECONDARY DOPE VECTOR STORAGE
*                                     ACCUMULATOR AC2


*             FOR EACH VARIABLE IN THE VDA, THE FOLLOWING CODE IS
*        GENERATED (BETWEEN LABELS VAR1 AND VAR2).


VAR1     EVALUATE EXTENT EXPRESSIONS (DIMENSIONS AND STRING LENGTHS) AND
*        STORE RESULTS IN DOPE VECTOR IN DSA.
*        ALIGN ACCUMULATOR AC1 ON CORRECT BOUNDARY FOR VARIABLE
*        BUMP ACCUMULATOR AC2 BY SIZE OF SECONDARY DOPE VECTOR (IF VARIABLE
*        IS DIMENSIONED AND VARYING).
*        RELOCATE ADDRESS IN VARIABLES DOPE VECTOR RELATIVE TO START OF
*        VDA.
VAR2     BUMP ACCUMULATOR AC1 BY SIZE OF STORAGE REQUIRED FOR VARIABLE
         AR    0,7                    ADD AC1 AND AC2
         L     15,36(0,11)            LOAD GR15 WITH ENTRY POINT IHESADB
         BALR  14,15                  GET VDA
         LA    1,8(0,1)               BUMP VDA POINTER PAST FLAG AND CHAIN SLOTS
         AR    7,1                    POINT GR7 AT FIRST SECONDARY DOPE VECTOR.
         L     14,DV..VAR(0,13)       FOR EACH VARIABLE IN REGION, RELOCATE
         AR    14,1                   ADDRESS IN DOPE VECTOR.
         ST    14,DV..VAR(0,13)
*        FOR EACH DIMENSIONED VARYING ITEM IN REGION, INITIALIZE
VDA2     SECONDARY DOPE VECTORS.
         LA    10,PROCBASE            SET UP PROCEDURE BASE
                                      CODE (IF ANY) TO SET UP SOME ADDRESSING MECHANISMS IN
                                      ADVANCE FOR USE IN PROCEDURE
         BCR   15,8                   RETURN FROM COMMON PROLOGUE.
         CNOP  0,4
AB       BC    15,8(0,15)             BRANCH ROUND BCD OF ENTRY POINT
         DC    AL1(2)
         DC    C'AB'
         STM   14,11,12(13)           SAVE REGISTERS IN CALLER'S SAVE AREA
         L     10,PROBAS(0,15)        SET UP FIRST PROLOGUE BASE
         BAL   8,GETDSA(10)           BRANCH AND LINK TO GET DSA AND TO SET
*                                     UP ADDRESSING VECTOR
         MVI   SWITCH(13),X'X3'       SET UP RETURN (EXP) SWITCH IF THERE IS
*                                     RETURN (EXP) AND DATA ATTRIBUTES OF
*                                     ENTRY LABELS DIFFER
         BC    15,COPRAM2(0,8)        BRANCH TO COPY OVER PARAMETERS
IJK      BC    15,12(0,15)            BRANCH ROUND FOLLOWING CONSTANTS
         DC    AL1(3)                 LENGTH OF BCD
         DC    C'IJK'                 BCD OF ENTRY POINT
PROBAS   DC    A(A)                   FIRST PROLOGUE BASE
         STM   14,11,12(13)           SAVE REGISTERS IN CALLER'S SAVE AREA
         L     10,PROBAS(0,15)        SET UP FIRST PROLOGUE BASE
         BAL   8,GETDSA(0,10)         BRANCH TO GET DSA AND SET UP
*                                     ADDRESSING VECTOR
         MVI   SWITCH(13),X'X4'       SET RETURN (EXP) SWITCH
COPRAM2  L     14,0(0,1)              PICK UP FIRST ARGUMENT ADDRESS
         LA    0,10(0,0)
```

```
         SR    14,0
         LH    14,0(0,14)              PICK UP PSEUDO-REGISTER OFFSET OF
         ST    14,Y(0,13)              ARGUMENT AND STORE IN DSA.
         L     14,4(0,1)               PICK UP ADDRESS OF SECOND ARGUMENT
         ST    14,Z(0,13)              AND STORE IN Z
         L     14,8(0,1)               PICK UP ADDRESS OF TARGET FIELD
         ST    14,TARGET(0,13)         AND STORE IN DSA
         L     10,A...A(0,11)          LOAD GR10 WITH ADDRESS OF FIRST BYTE
*                                      OF PROCEDURE
         BAL   8,COMMON(0,10)          BRANCH AND LINK TO COMMON PROLOGUE
         BC    15,AE...AB(0,10)        BRANCH TO APPARENT ENTRY POINT AB
*        THIS IS THE APPARENT ENTRY POINT OF A.


*        THE FOLLOWING IS AN ON BLOCK PROLOGUE WHICH IS COMPILED FOR ALL
*        ON BLOCKS EXCEPT IF BLOCK SPECIFIES SYSTEM

         STM   14,11,12(13)            SAVE REGISTERS
         LR    10,15                   SET PROLOGUE BASE

         L     11,STATIC(0,10)         SET UP STATIC INTERNAL DATA POINTER
         L     15,32(0,11)             LOAD GR15 WITH ADDRESS OF IHESADA
         L     0,SIZDSA(0,10)          LOAD GR0 WITH SIZE OF DSA
         BALR  14,15                   CALL IHESADA TO GET A DSA
         LR    14,13
         LA    0,7(0,0)
         SR    15,15
LOOP     A     14,0(0,11)              SET UP ADDRESSING VECTOR IN
         ST    14,ADVEC+4(15,13)       DSA
         LA    15,4(0,15)
         BCT   0,LOOP(0,10)
         BC    15,COMMON(0,10)         BRANCH TO INITIALIZE DSA
         DC    F'SIZE OF DSA'
         DC    A(STATIC INTERNAL CONTROL SECTION)
COMMON   BALR  10,0
*        CODE IS GENERATED HERE FOLLOWING SAME PATTERN AS FOR
*        A BEGIN PROLOGUE (SEE BELOW) COMMON SECTION.
         LA    10,ONSTART
ONSTART


*        EPILOGUE FOR AN ON BLOCK
         L     15,IHESAFA(0,11)        LOAD GR15 WITH ENTRY POINT TO EPILOGUE
         BALR  14,15                   ROUTINE AND BRANCH AND LINK TO IT


*        PROLOGUE FOR A BEGIN BLOCK
B        LA    14,BEND                 SET UP RETURN REGISTER
         BALR  15,0                    SET UP ENTRY POINT ADDRESS
         CNOP  0,4
         STM   14,11,12(13)            SAVE REGISTERS IN CONTAINING BLOCK'S DSA
         BALR  9,0                     SET UP PROLOGUE BASE
         L     15,32(0,11)             LOAD GR15 WITH ENTRY POINT TO IHESADA
         L     0,SIZDSA(0,9)
         BALR  14,15                   GET A DSA
         LR    14,13
         LA    0,7(0,0)
         SR    15,15
LOOP     A     14,0(0,11)
         ST    14,ADVEC+4(15,13)       SET UP ADDRESSING VECTOR FOR DSA
         LA    15,4(0,15)
         BCT   0,LOOP(0,9)
         BC    15,COMMON(0,9)
         DC    F'SIZE OF DSA'
         LA    9,ADDAREA(0,13)         SET GRG TO POINT TO ADDRESSING AREA
```

```
        ST    9,ADVEC(0,13)          AT END OF DSA AND STORE IN ADDRESSING
*                                    VECTOR
*       THE CODE GENERATED HERE IS THE SAME AS THAT FOR A PROCEDURE PROLOGUE
        EXCEPT THAT A DIFFERENT CODE BYTE IS MOVED TO THE FIRST BYTE OF THE
*       DSA; GR10 IS NOT RESET; AND THE BCR 15,8 IS NOT GENERATED.


*       EPILOGUE OF A BEGIN BLOCK
        L     15,IHESAFA             LOAD GR15 WITH ENTRY POINT OF
        BALR  14,15                  EPILOGUING ROUTINE AND CALL IT
BEND


*       RETURN (EXP) STATEMENT EXAMINES THE LOCATION 'SWITCH' IN THE DSA
*       SET BY THE PROLOGUE TO DETERMINE THE CONVERSION REQUIRED ON
*       THE EXPRESSION. IT THEN ASSIGNS THE CONVERTED EXPRESSION TO
*       THE TARGET FIELD FOR WHICH THE LOCATION 'TARGET', IN THE DSA,
*       POINTS TO EITHER ITS DOPE VECTOR (IN THE CASE OF A STRING)
*       OR THE STORAGE. ROUTINE IHESAFA IS THEN INVOKED.
*       END STATEMENT (WHICH IS THE SAME AS A RETURN STATEMENT)
        L     15,IHESAFA
        BALR  14,15
```

DSA OPTIMIZATION

In compilations specifying OPT=1, if a PROCEDURE or BEGIN block has a DSA which requires less than 512 bytes of storage, such storage may, under certain conditions, be obtained from STATIC storage or from library workspace. To obtain a STATIC DSA, the block must satisfy these conditions:

1. The block must not be re-entrant or recursive
2. The block must not be nested (at any depth) within an ON block
3. The block must not have the MAIN or TASK options

A block which is ineligible for a STATIC DSA, and whose DSA will never be active when any new DSA is required, is allocated its DSA from library workspace.

Each block requiring a DSA either in STATIC or in library workspace calls one of two compiled subroutines, instead of IHESAD, to allocate the storage. Either or both subroutines, if required, are compiled onto the end of the program, and are prefixed by the comments 'STATIC PROLOGUE SUBROUTINE' and 'DYNAMIC PROLOGUE subroutine' respectively. Entry may be made to the STATIC prologue subroutine at one of several points.

Any block using one of these prologue subroutines will also use a compiled Epilogue subroutine, which will be called for the END statement of the block, or for a RETURN statement without an expression. (The same Epilogue subroutine serves both STATIC and library workspace DSAs.) If there is any core to be freed, the Epilogue subroutine will call IHESAFA. The Epilogue subroutine is also compiled onto the end of the program, and always immediately precedes the STATIC Prologue subroutine if this is present.

The address of the Dynamic Prologue subroutine and the Epilogue subroutine are placed in the STATIC internal control section, at offsets 40 and 48 from the start respectively. Since the STATIC Prologue subroutine always follows the Epilogue subroutine, which is of fixed length, a third address slot is not required for it.

Listings of the Dynamic and Static Prologue and the Epilogue subroutines

```
*       DYNAMIC PROLOGUE SUBROUTINE

        L       5,PR..IHEQLWF(12)
        LTR     5,5
        BC      8,90(15)
        L       6,PR..IHEQINV(12)
        LTR     6,6
        BC      4,90(15)
        LR      13,5
        SR      2,2
        L       3,PR..IHEQSLA(12)
        ST      13,PR..IHEQSLA(12)
        ST      3,4(13)
        TM      0(3),X'80'
        BC      1,52(15)
        L       3,4(3)
        B       36(15)
        ST      13,8(3)
        L       4,PR..IHEQINV(12)
```

```
LA      4,1(4)
ST      4,PR..IHEQINV(12)

        ST      4,84(13)
        ST      2,80(13)
        ST      2,8(13)
        MVI     76(13),X'00'
        ST      2,96(13)
        BR      14
        L       15,32(11)
        BR      15

*       END SUBROUTINE

*       EPILOGUE SUBROUTINE

        TM      1(13),X'80'
        BC      8,60(15)
        L       2,80(13)
        LTR     2,2
        BC      7,60(15)
        C       13,PR..IHEQSLA(12)
        BC      7,60(15)
        L       13,4(13)
        ST      13,PR..IHEQSLA(12)
        TM      0(13),X'80'
        BC      1,50(15)
        L       13,4(13)
        B       34(15)
        ST      2,8(13)
        LM      14,11,12(13)
        BR      14

        L       15,A..IHESAFA
        BR      15

*       END SUBROUTINE

*       STATIC PROLOGUE SUBROUTINE

        L       4,PR..IHEQINV(12)
        LTR     4,4
        BC      11,86(15)
        L       7,PR..IHEQLWO(12)
        MVC     80(4,3),80(7)
        LA      4,1(4)
        ST      4,PR..IHEQINV(12)
        ST      4,84(3)
        MVI     76(3),X'00'
        ST      3,8(13)
        LR      13,3
        L       3,PR..IHEQSLA(12)
        ST      3,4(13)
        ST      13,PR..IHEQSLA(12)
        SR      2,2
        ST      2,80(13)
        ST      2,8(13)
        ST      2,96(13)
        BR      14

*       END SUBROUTINE
```

APPENDIX I: DIAGNOSTIC MESSAGES

The messages produced by the PL/I (F) Compiler are explained in the publication IBM System/360 Operating System, PL/I (F) Programmer's Guide. The following table associates a message number with the particular phase and module in which the corresponding message is generated.

Message Number	Logical Phase	Module
IEM0001I	Read In	CA
IEM0002I	Read In	CA
IEM0003I	Read In	CA,CP
IEM0004I	Read In	CA
IEM0005I	Read In	CA,CL
IEM0006I	Read In	CA
IEM0007I	Read In	CA
IEM0008I	Read In	CA
IEM0009I	Read In	CA
IEM0010I	Read In	CA
IEM0011I	Read In	CA
IEM0012I	Read In	CA
IEM0013I	Read In	CA
IEM0014I	Read In	CA
IEM0015I	Read In	CA
IEM0016I	Read In	CA
IEM0017I	Read In	CA
IEM0018I	Read In	CA
IEM0019I	Read In	CA
IEM0020I	Read In	CA
IEM0021I	Read In	CA
IEM0022I	Read In	CA
IEM0023I	Read In	CA
IEM0024I	Read In	CA
IEM0025I	Read In	CA
IEM0026I	Read In	CA
IEM0027I	Read In	CA
IEM0028I	Read In	CG
IEM0029I	Read In	CA
IEM0031I	Read In	CA,CL,CT
IEM0033I	Read In	CC
IEM0035I	Read In	CC
IEM0037I	Read In	CC
IEM0038I	Read In	CC
IEM0039I	Read In	CC
IEM0040I	Read In	CC
IEM0043I	Read In	CC
IEM0044I	Read In	CC
IEM0045I	Read In	CC
IEM0046I	Read In	CC
IEM0048I	Read In	CG
IEM0050I	Read In	CL,CP
IEM0051I	Read In	CL,CP
IEM0052I	Read In	CO
IEM0053I	Read In	CO
IEM0054I	Read In	CO
IEM0055I	Read In	CP
IEM0057I	Read In	CC
IEM0058I	Read In	CC
IEM0059I	Read In	CP
IEM0060I	Read In	CP
IEM0061I	Read In	CP
IEM0063I	Read In	CO
IEM0064I	Read In	CC
IEM0067I	Read In	CL
IEM0069I	Read In	CG
IEM0070I	Read In	CG
IEM0071I	Read In	CG
IEM0072I	Read In	CG
IEM0074I	Read In	CG
IEM0075I	Read In	CG
IEM0076I	Read In	CG
IEM0077I	Read In	CG
IEM0078I	Read In	CG
IEM0080I	Read In	CG
IEM0081I	Read In	CG
IEM0082I	Read In	CI
IEM0083I	Read In	CG
IEM0084I	Read In	CG
IEM0085I	Read In	CI
IEM0090I	Read In	CI
IEM0094I	Read In	CI
IEM0095I	Read In	CI
IEM0096I	Read In	CG,CI
IEM0097I	Read In	CI
IEM0099I	Read In	CI
IEM0100I	Read In	CI
IEM0101I	Read In	CM
IEM0102I	Read In	CI
IEM0103I	Read In	CI
IEM0104I	Read In	CC
IEM0105I	Read In	CC,CG
IEM0106I	Read In	CI,CV
IEM0107I	Read In	CI
IEM0108I	Read In	CI
IEM0109I	Read In	CG,CI
IEM0111I	Read In	CI
IEM0112I	Read In	CI
IEM0113I	Read In	CG,CM
IEM0114I	Read In	CI
IEM0115I	Read In	CL
IEM0116I	Read In	CI
IEM0117I	Read In	CM
IEM0118I	Read In	CL
IEM0119I	Read In	CM
IEM0120I	Read In	CM
IEM0121I	Read In	CO
IEM0122I	Read In	CO
IEM0123I	Read In	CM
IEM0124I	Read In	CO
IEM0125I	Read In	CI
IEM0126I	Read In	CI
IEM0127I	Read In	CI
IEM0128I	Read In	CO
IEM0129I	Read In	CL
IEM0130I	Read In	CL
IEM0131I	Read In	CO
IEM0132I	Read In	CO
IEM0134I	Read In	CP
IEM0135I	Read In	CG,CI
IEM0136I	Read In	CO
IEM0138I	Read In	CP
IEM0139I	Read In	CP

IEM0140I	Read In	CO
IEM0141I	Read In	CP
IEM0144I	Read In	CO
IEM0145I	Read In	CO
IEM0147I	Read In	CO
IEM0149I	Read In	CL,CM
IEM0150I	Read In	CL
IEM0151I	Read In	CO
IEM0152I	Read In	CO
IEM0153I	Read In	CO
IEM0154I	Read In	CA
IEM0158I	Read In	CO
IEM0159I	Read In	CO
IEM0163I	Read In	CT
IEM0166I	Read In	CL
IEM0172I	Read In	CL
IEM0180I	Read In	CT
IEM0181I	Read In	CL
IEM0182I	Read In	CL,CS, CT,CV
IEM0185I	Read In	CT
IEM0187I	Read In	CT
IEM0191I	Read In	CT
IEM0193I	Read In	CT
IEM0194I	Read In	CT
IEM0195I	Read In	CT
IEM0198I	Read In	CT
IEM0202I	Read In	CL
IEM0207I	Read In	CG
IEM0208I	Read In	CG
IEM0209I	Read In	CC
IEM0211I	Read In	CL
IEM0212I	Read In	CP
IEM0213I	Read In	CP
IEM0214I	Read In	CP
IEM0216I	Read In	CP
IEM0217I	Read In	CP
IEM0220I	Read In	CT
IEM0221I	Read In	CT
IEM0222I	Read In	CT
IEM0223I	Read In	CT
IEM0224I	Read In	CT
IEM0225I	Read In	CT
IEM0226I	Read In	CT
IEM0227I	Read In	CT
IEM0228I	Read In	CT
IEM0229I	Read In	CT
IEM0230I	Read In	CS,CT
IEM0231I	Read In	CT
IEM0232I	Read In	CT
IEM0233I	Read In	CV
IEM0235I	Read In	CS
IEM0236I	Read In	CS
IEM0237I	Read In	CS
IEM0238I	Read In	CV
IEM0239I	Read In	CS
IEM0240I	Read In	CV
IEM0241I	Read In	CV
IEM0242I	Read In	CV
IEM0243I	Read In	CV
IEM0244I	Read In	CV
IEM0245I	Read In	CV
IEM0247I	Read In	CW
IEM0254I	Read In	CC
IEM0255I	Read In	CG
IEM0510I	Dictionary	EH
IEM0511I	Dictionary	EH
IEM0512I	Dictionary	EH
IEM0513I	Dictionary	EG
IEM0514I	Dictionary	EG
IEM0515I	Dictionary	EG
IEM0516I	Dictionary	EG
IEM0517I	Dictionary	EG
IEM0518I	Dictionary	EG
IEM0519I	Dictionary	EG
IEM0520I	Dictionary	EG
IEM0521I	Dictionary	EG
IEM0522I	Dictionary	EG
IEM0523I	Dictionary	EG
IEM0524I	Dictionary	EH
IEM0525I	Dictionary	EI
IEM0527I	Dictionary	EJ
IEM0528I	Dictionary	EH,EI,EJ
IEM0529I	Dictionary	EI
IEM0530I	Dictionary	EI
IEM0532I	Dictionary	EI
IEM0533I	Dictionary	EI
IEM0534I	Dictionary	EI
IEM0535I	Dictionary	EI
IEM0536I	Dictionary	EI
IEM0537I	Dictionary	EI
IEM0538I	Dictionary	EJ
IEM0539I	Dictionary	EJ
IEM0540I	Dictionary	EJ
IEM0541I	Dictionary	EJ
IEM0542I	Dictionary	EJ
IEM0543I	Dictionary	EL,EK,EM
IEM0544I	Dictionary	EL,EK,EM
IEM0545I	Dictionary	EL,EK,EM
IEM0546I	Dictionary	EL,EK,EM
IEM0547I	Dictionary	EL,EK,EM
IEM0548I	Dictionary	EL,EK,EM
IEM0549I	Dictionary	EL,EK,EM
IEM0550I	Dictionary	EL,EK,EM
IEM0551I	Dictionary	EK,EL,EM
IEM0552I	Dictionary	EL,EK,EM
IEM0553I	Dictionary	EL,EK,EM
IEM0554I	Dictionary	EL,EK,EM
IEM0555I	Dictionary	EL,EK,EM
IEM0556I	Dictionary	EL,EK,EM
IEM0557I	Dictionary	EL,EK,EM
IEM0558I	Dictionary	EL,EK,EM
IEM0559I	Dictionary	EL,EK,EM
IEM0560I	Dictionary	EL,EK,EM
IEM0561I	Dictionary	EL,EK,EM
IEM0562I	Dictionary	EK,EL,EM
IEM0563I	Dictionary	EK,EL,EM
IEM0564I	Dictionary	EK,EL,EM
IEM0565I	Dictionary	EK,EL,EM
IEM0566I	Dictionary	EK,EL,EM
IEM0567I	Dictionary	EP
IEM0568I	Dictionary	EP
IEM0569I	Dictionary	EP
IEM0570I	Dictionary	EP
IEM0571I	Dictionary	EK
IEM0572I	Dictionary	EL
IEM0573I	Dictionary	EL
IEM0576I	Dictionary	EL
IEM0577I	Dictionary	EL
IEM0578I	Dictionary	EL
IEM0579I	Dictionary	EP
IEM0580I	Dictionary	FI
IEM0589I	Dictionary	EW
IEM0590I	Dictionary	EW
IEM0591I	Dictionary	EW
IEM0592I	Dictionary	EW
IEM0593I	Dictionary	EW
IEM0594I	Dictionary	EW

IEM0595I	Dictionary	EW	IEM0698I	Dictionary	FI
IEM0596I	Dictionary	EW	IEM0699I	Dictionary	FI
IEM0597I	Dictionary	EW	IEM0700I	Dictionary	FI
IEM0598I	Dictionary	EW	IEM0701I	Dictionary	FI
IEM0599I	Dictionary	EW	IEM0702I	Dictionary	FI
IEM0602I	Dictionary	FV,FW	IEM0703I	Dictionary	FI
IEM0603I	Dictionary	FV,FW	IEM0704I	Dictionary	FI
IEM0604I	Dictionary	FV,FW	IEM07051	Dictionary	FI
IEM06052	Dictionary	FV,FW	IEM0706I	Dictionary	FI
IEM0606I	Dictionary	FV,FW	UEM0707I	Dictionary	FI
IEM0607I	Dictionary	FV,FW	IEM0715I	Dictionary	EJ
IEM0608I	Dictionary	FV,FW	IEM0718I	Dictionary	FO
IEM0609I	Dictionary	FV,FW	IEM0719I	Dictionary	FO
IEM0610I	Dictionary	FV,FW	IEM0720I	Dictionary	FO
IEM0611I	Dictionary	FV,FW	IEM0721I	Dictionary	FO
IEM0612I	Dictionary	FV	IEM0722I	Dictionary	FO
IEM0613I	Dictionary	FW	IEM0723I	Dictionary	FO
IEM0614I	Dictionary	FW	IEM0724I	Dictionary	FO
IEM0623I	Dictionary	FV,FW	IEM0725I	Dictionary	FO
IEM0624I	Dictionary	FV,FW	IEM0726I	Dictionary	FO
IEM0625I	Dictionary	FV,FW	IEM0727I	Dictionary	FO
IEM0626I	Dictionary	FV,FW	IEM0728I	Dictionary	FO
IEM0628I	Dictionary	FV,FW	IEM0729I	Dictionary	FO
IEM0629I	Dictionary	FV,FW	IEM0730I	Dictionary	FQ
IEM0630I	Dictionary	FV,FW	IEM0731I	Dictionary	FQ
IEM0631I	Dictionary	FV,FW	IEM0732I	Dictionary	FQ
IEM0632I	Dictionary	FV,FW	IEM0733I	Dictionary	FQ
IEM0633I	Dictionary	EY	IEM0734I	Dictionary	FQ
IEM0634I	Dictionary	EY	IEM0735I	Dictionary	FQ
IEM0636I	Dictionary	EY	IEM0736I	Dictionary	FQ
IEM0637I	Dictionary	EY	IEM0737I	Dictionary	FQ
IEM0638I	Dictionary	EY	IEM0739I	Dictionary	FQ
IEM0640I	Dictionary	EY	IEM0740I	Dictionary	FQ
IEM0641I	Dictionary	EY	IEM0741I	Dictionary	FQ
IEM0642I	Dictionary	EY	IEM0742I	Dictionary	FQ
IEM0643I	Dictionary	EY	IEM0745I	Dictionary	FQ
IEM0644I	Dictionary	EY	IEM0746I	Dictionary	FQ
IEM0645I	Dictionary	EY	IEM0747I	Dictionary	FQ
IEM0646I	Dictionary	EY	IEM0748I	Dictionary	FQ
IEM0647I	Dictionary	EY	IEM0749I	Dictionary	FQ
IEM0653I	Dictionary	FE	IEM0750I	Dictionary	FQ
IEM0655I	Dictionary	FE	IEM0751I	Dictionary	FQ
IEM0656I	Dictionary	FE	IEM0752I	Dictionary	FQ
IEM0657I	Dictionary	FE	IEM0754I	Dictionary	FQ
IEM0658I	Dictionary	FE	IEM0755I	Dictionary	FQ
IEM0660I	Dictionary	FE	IEM0756I	Dictionary	FQ
IEM0661I	Dictionary	FE	IEM0758I	Dictionary	FQ
IEM0662I	Pretranslator	GV	IEM0759I	Dictionary	FQ
IEM0673I	Dictionary	FE	IEM0760I	Dictionary	FQ
IEM0674I	Dictionary	FF	IEM0761I	Dictionary	FQ
IEM0675I	Dictionary	FF	IEM0762I	Dictionary	FQ
IEM0676I	Dictionary	FF	IEM0769I	Pretranslator	GB
IEM0677I	Dictionary	FE	IEM0770I	Pretranslator	GB
IEM0682I	Dictionary	FI	IEM0771I	Pretranslator	GB
IEM0683I	Dictionary	FI	IEM0778I	Pretranslator	GB
IEM0684I	Dictionary	FI	IEM0779I	Pretranslator	GB
IEM0685I	Dictionary	FI	IEM0780I	Pretranslator	GB
IEM0686I	Dictionary	FI	IEM0781I	Pretranslator	GB
IEM0687I	Dictionary	FI	IEM0782I	Pretranslator	GB
IEM0688I	Dictionary	FI	IEM0786I	Pretranslator	GK
IEM0689I	Dictionary	FI	IEM0787I	Pretranslator	GK
IEM0690I	Dictionary	FI	IEM0791I	Pretranslator	GK
IEM0691I	Dictionary	FI	IEM0792I	Pretranslator	GP,GQ,GR
IEM0692I	Dictionary	FI	IEM0793I	Pretranslator	GP,GQ,GR
IEM0693I	Dictionary	FI	IEM0794I	Pretranslator	GP,GQ,GR
IEM0694I	Dictionary	FI	IEM0795I	Pretranslator	GP,GQ,GR
IEM0695I	Dictionary	FI	IEM0796I	Pretranslator	GP,GQ,GR
IEM0696I	Dictionary	FI	IEM0797I	Pretranslator	GP,GQ,GR
IEM0697I	Dictionary	FI	IEM0798I	Pretranslator	GP,GQ,GR

IEM0799I	Pretranslator	GP,GQ,GR	IEM3052I	Compiler Control	AL/AN
IEM0800I	Pretranslator	GP,GQ,GR	IEM3842I	Compiler Control	AL/AN
IEM0801I	Pretranslator	GP,GQ,GR	IEM3843I	Compiler Control	AL/AN
IEM0802I	Pretranslator	GP,GQ,GR	IEM3845I	Compiler Control	AL/AN
IEM0803I	Pretranslator	GP,GQ,GR	IEM3846I	Compiler Control	AL/AN
IEM0804I	Pretranslator	GP,GQ,GR	IEM3847I	Compiler Control	AL/AN
IEM0805I	Pretranslator	GP,GQ,GR	IEM3848I	Compiler Control	AL/AN
IEM0808I	Pretranslator	GR			

IEM0806I	Pretranslator	GP,GQ,GR
IEM0807I	Pretranslator	GP,GQ,GR
IEM0816I	Pretranslator	GU,GV
IEM0817I	Pretranslator	GU,GV
IEM0818I	Pretranslator	GU,GV
IEM0819I	Pretranslator	GU,GV
IEM0820I	Pretranslator	GU,GV
IEM0821I	Pretranslator	GU,GV
IEM0823I	Pretranslator	GU,GV
IEM0824I	Pretranslator	GU
IEM0825I	Pretranslator	GU,GV
IEM0826I	Pretranslator	GU,GV
IEM0832I	Pretranslator	HF,HG
IEM0833I	Pretranslator	HF,HG
IEM0834I	Pretranslator	HF,HG
IEM0835I	Pretranslator	HF,HG
IEM0836I	Pretranslator	HF,HG
IEM0837I	Pretranslator	HF,HG
IEM0838I	Pretranslator	HF
IEM0848I	Pretranslator	HF,HG
IEM0849I	Pretranslator	HF,HG
IEM0850I	Pretranslator	HF,HG
IEM0851I	Pretranslator	HF,HG
IEM0852I	Pretranslator	HF,HG
IEM0853I	Pretranslator	HF,HG
IEM0864I	Pretranslator	HK,HL
IEM0865I	Pretranslator	HK,HL
IEM0866I	Pretranslator	HK,HL
IEM0867I	Pretranslator	HK,HL
IEM0868I	Pretranslator	HK,HL
IEM0869I	Pretranslator	HK,HL
IEM0870I	Pretranslator	HK,HL
IEM0871I	Pretranslator	HK,HL
IEM0872I	Pretranslator	HK,HL
IEM0873I	Pretranslator	HK,HL
IEM0874I	Pretranslator	HK,HL
IEM0875I	Pretranslator	HK,HL
IEM0876I	Pretranslator	HK,HL
IEM0877I	Pretranslator	HK,HL
IEM0878I	Pretranslator	HK,HL
IEM0879I	Pretranslator	HK,HL
IEM0880I	Pretranslator	HK,HL
IEM0881I	Pretranslator	HK,HL
IEM0882I	Pretranslator	HK
IEM0896I	Pretranslator	HP
IEM0897I	Pretranslator	HP
IEM0898I	Pretranslator	HP
IEM0899I	Pretranslator	HP
IEM0900I	Pretranslator	HP
IEM0901I	Pretranslator	HP
IEM0902I	Pretranslator	HP
IEM0903I	Pretranslator	HP
IEM0906I	Pretranslator	HP
IEM0907I	Pretranslator	HP
IEM1024I	Translator	IA
IEM1025I	Translator	IA
IEM1026I	Translator	IA
IEM1027I	Translator	IA
IEM1028I	Translator	IA
IEM1029I	Translator	IA
IEM1030I	Translator	IA
IEM1040I	Translator	IM
IEM1051I	Translator	IM
IEM1056I	Translator	IM
IEM1057I	Translator	IM
IEM1058I	Translator	IM
IEM1059I	Translator	IM
IEM1060I	Translator	IM
IEM1061I	Translator	IM
IEM1062I	Translator	IM
IEM1063I	Translator	IM
IEM1064I	Translator	IM
IEM1065I	Translator	IM
IEM1066I	Translator	IM
IEM1067I	Translator	IM
IEM1068I	Translator	IM
IEM1070I	Translator	IM
IEM1071I	Translator	IM
IEM1072I	Translator	IM
IEM1073I	Translator	IM
IEM1074I	Translator	IM
IEM1076I	Translator	JD
IEM1082I	Translator	IX
IEM1088I	Aggregates	JK
IEM1089I	Aggregates	JK
IEM1090I	Aggregates	JK
IEM1091I	Aggregate Preprocessor	JI
IEM1092I	Aggregates	JK
IEM1104I	Aggregates	JP
IEM1105I	Aggregates	JP
IEM1106I	Aggregates	JP
IEM1107I	Aggregates	JP
IEM1108I	Aggregates	JP
IEM1110I	Aggregates	JP
IEM1111I	Aggregates	JP
IEM1112I	Aggregates	JP
IEM1113I	Aggregates	JP
IEM1114I	Aggregates	JP
IEM1115I	Aggregates	JP
IEM1120I	Aggregates	JP
IEM1121I	Aggregates	JP
IEM1122I	Aggregates	JP
IEM1123I	Pseudo-code	LD
IEM1125I	Pseudo-code	LD
IEM1200I	Pseudo-code	KT
IEM1210I	Do loop optimization	KC
IEM1211I	Do loop optimization	KE
IEM1220I	Do loop optimization	KU
IEM1223I	Do loop optimization	KO
IEM1224I	Do loop optimization	KA
IEM1569I	Pseudo-code	LG-ON
IEM1570I	Pseudo-code	LG
IEM1571I	Pseudo-code	LG
IEM1572I	Pseudo-code	LG
IEM1574I	Pseudo-code	LG
IEM1575I	Pseudo-code	LG
IEM1588I	Pseudo-code	MD
IEM1600I	Pseudo-code	LS,LT,LU
IEM1601I	Pseudo-code	LS
IEM1602I	Pseudo-code	LS,LT,LU
IEM1603I	Pseudo-code	LS,LT,LU
IEM1604I	Pseudo-code	LS,LT,LU
IEM1605I	Pseudo-code	LS,LT,LU
IEM1606I	Pseudo-code	LS,LT,LU
IEM1607I	Pseudo-code	LS,LT,LU
IEM1608I	Pseudo-code	LS,LT,LU
IEM1609I	Pseudo-code	LS,LT,LU
IEM1610I	Pseudo-code	LW
IEM1611I	Pseudo-code	LW
IEM1612I	Pseudo-code	LW
IEM1613I	Pseudo-code	LS,LT,LU
IEM1614I	Pseudo-code	LW
IEM1615I	Pseudo-code	ME
IEM1616I	Pseudo-code	ME
IEM1617I	Pseudo-code	MB
IEM1618I	Pseudo-code	MB

IEM1619I	Pseudo-code	MB
IEM1620I	Pseudo-code	MB
IEM1621I	Pseudo-code	MB
IEM1622I	Pseudo-code	MB,ME
IEM1624I	Pseudo-code	MB
IEM1625I	Pseudo-code	MB
IEM1626I	Pseudo-code	ME
IEM1627I	Pseudo-code	ME
IEM1628I	Pseudo-code	ME
IEM1629I	Pseudo-code	ME
IEM1630I	Pseudo-code	MG,MH
IEM1631I	Pseudo-code	MI,MJ
IEM1632I	Pseudo-code	MI,MJ
IEM1633I	Pseudo-code	ME
IEM1634I	Pseudo-code	ME
IEM1635I	Pseudo-code	ME
IEM1636I	Pseudo-code	ME
IEM1637I	Pseudo-code	ME
IEM1638I	Pseudo-code	ME
IEM1639I	Pseudo-code	MF
IEM1640I	Pseudo-code	MM,MN
IEM1641I	Pseudo-code	MM,MN
IEM1642I	Pseudo-code	MM,MN
IEM1643I	Pseudo-code	MM,MN
IEM1644I	Pseudo-code	MM,MN
IEM1645I	Pseudo-code	MM,MN
IEM1648I	Pseudo-code	MM,MN
IEM1649I	Pseudo-code	MM,MN
IEM1650I	Pseudo-code	MM,MN
IEM1651I	Pseudo-code	MM,MN
IEM1652I	Pseudo-code	MM,MN
IEM1654I	Pseudo-code	MM,MN
IEM1655I	Pseudo-code	MN
IEM1656I	Pseudo-code	ME
IEM1657I	Pseudo-code	MM
IEM1658I	Pseudo-code	MN
IEM1670I	Pseudo-code	MP
IEM1671I	Pseudo-code	MP
IEM1680I	Pseudo-code	MS
IEM1687I	Pseudo-code	MS
IEM1688I	Pseudo-code	MS
IEM1689I	Pseudo-code	MS
IEM1692I	Pseudo-code	MS
IEM1693I	Pseudo-code	MS
IEM1695I	Pseudo-code	MA
IEM1696I	Pseudo-code	MA
IEM1750I	Pseudo-code	MS
IEM1751I	Pseudo-code	MS
IEM1752I	Pseudo-code	NA
IEM1753I	Pseudo-code	NA
IEM1754I	Pseudo-code	NA
IEM1790I	Pseudo-code	OG,OM
IEM1793I	Pseudo-code	OE
IEM1794I	Pseudo-code	OE
IEM1795I	Pseudo-code	OE
IEM1796I	Pseudo-code	OE
IEM1797I	Pseudo-code	OE
IEM1800I	Pseudo-code	OS
IEM1801I	Pseudo-code	OS
IEM1802I	Pseudo-code	OS
IEM1803I	Pseudo-code	OS
IEM1804I	Pseudo-code	OS
IEM1805I	Pseudo-code	OS
IEM1806I	Pseudo-code	OS
IEM1807I	Pseudo-code	OS
IEM1808I	Pseudo-code	OS
IEM1809I	Pseudo-code	OS
IEM1810I	Pseudo-code	OS
IEM1811I	Pseudo-code	OS
IEM1812I	Pseudo-code	OS
IEM1813I	Pseudo-code	OS
IEM1814I	Pseudo-code	OS
IEM1815I	Pseudo-code	OS
IEM1816I	Pseudo-code	NJ
IEM1817I	Pseudo-code	NJ
IEM1818I	Pseudo-code	NJ
IEM1819I	Pseudo-code	NJ
IEM1820I	Pseudo-code	NJ
IEM1821I	Pseudo-code	NJ
IEM1822I	Pseudo-code	NJ
IEM1823I	Pseudo-code	NJ
IEM1824I	Pseudo-code	NM
IEM1825I	Pseudo-code	NG
IEM1826I	Pseudo-code	NG
IEM1827I	Pseudo-code	NG
IEM1828I	Pseudo-code	NG
IEM1829I	Pseudo-code	NG
IEM1830I	Pseudo-code	NG
IEM1831I	Pseudo-code	NJ
IEM1832I	Pseudo-code	NM
IEM1833I	Pseudo-code	NM
IEM1834I	Pseudo-code	NM
IEM1835I	Pseudo-code	NM
IEM1836I	Pseudo-code	NM
IEM1837I	Pseudo-code	NM
IEM1838I	Pseudo-code	NM
IEM1839I	Pseudo-code	NM
IEM1840I	Pseudo-code	NM
IEM1841I	Pseudo-code	NM
IEM1843I	Pseudo-code	NM
IEM1844I	Pseudo-code	NM
IEM1845I	Pseudo-code	NM
IEM1846I	Pseudo-code	NM
IEM1847I	Pseudo-code	NM
IEM1848I	Pseudo-code	NM
IEM1849I	Constant Conversions	OS
IEM1850I	Constant Conversions	OS
IEM1860I	Pseudo-code	NU
IEM1861I	Pseudo-code	NU
IEM1862I	Pseudo-code	NU
IEM1870I	Pseudo-code	NU
IEM1871I	Pseudo-code	NU
IEM1872I	Pseudo-code	NU
IEM1873I	Pseudo-code	NU
IEM1874I	Pseudo-code	NU
IEM1875I	Pseudo-code	NV
IEM2304I	Storage Allocation	PD
IEM2305I	Storage Allocation	PD
IEM2352I	Storage Allocation	PD
IEM2650I	Register Allocation	RA
IEM2660I	Register Allocation	RD
IEM2661I	Register Allocation	RD
IEM2700I	Register Allocation	RF,RG,RH
IEM2701I	Register Allocation	RF,RG,RH
IEM2702I	Register Allocation	RF,RG,RH
IEM2703I	Register Allocation	RF,RG,RH
IEM2704I	Register Allocation	RF,RG,RH
IEM2705I	Register Allocation	RF,RG,RH
IEM2706I	Register Allocation	RF,RG,RH
IEM2707I	Register Allocation	RF,RG,RH
IEM2708I	Register Allocation	RF,RG,RH
IEM2709I	Register Allocation	RF,RG,RH
IEM2710I	Register Allocation	RF,RG,RH
IEM2711I	Register Allocation	RF,RG,RH
IEM2712I	Register Allocation	RF,RG,RH
IEM2817I	DCB Generation	GA

IEM2818I	DCB Generation	GA
IEM2819I	DCB Generation	GA
IEM2820I	DCB Generation	GA
IEM2821I	DCB Generation	GA
IEM2822I	DCB Generation	GA
IEM2823I	DCB Generation	GA
IEM2824I	DCB Generation	GA
IEM2825I	DCB Generation	GA
IEM2826I	DCB Generation	GA
IEM2827I	DCB Generation	GA
IEM2828I	DCB Generation	GA
IEM2829I	DCB Generation	GA
IEM2830I	DCB Generation	GA
IEM2831I	DCB Generation	GA
IEM2832I	DCB Generation	GA
IEM2833I	Final Assembly	TF
IEM2834I	Final Assembly	TF
IEM2835I	Final Assembly	TF
IEM2836I	Final Assembly	TF
IEM2837I	Final Assembly	TF
IEM2852I	Final Assembly	TJ
IEM2853I	Final Assembly	TJ
IEM2854I	Final Assembly	TJ
IEM2855I	Final Assembly	TJ
IEM2865I	Final Assembly	TO
IEM2866I	Final Assembly	TO
IEM2867I	Final Assembly	TO
IEM2868I	Final Assembly	TO
IEM2881I	Final Assembly	TT
IEM2882I	Final Assembly	TT
IEM2883I	Final Assembly	TT
IEM2884I	Final Assembly	TT
IEM2885I	Final Assembly	TT
IEM2886I	Final Assembly	TT
IEM2887I	Final Assembly	TT
IEM2888I	Final Assembly	TT
IEM2897I	Final Assembly	UA
IEM2898I	Final Assembly	UA
IEM2899I	Final Assembly	UC
IEM2900I	Final Assembly	UC
IEM2913I	Final Assembly	UF
IEM3088I	Dictionary, Declare Pass 2	EL
IEM3136I-3149I	Dictionary, Declare Pass 2	EL
IEM3151I	Dictionary, Declare Pass 2	EL
IEM3153I	Dictionary, Declare Pass 2	EL
IEM3154I	Dictionary, Declare Pass 2	EL
IEM3156I	Dictionary, Declare Pass 2	EL
IEM3162I	Dictionary, Declare Pass 2	EL
IEM3167I-3173I	Dictionary, Declare Pass 2	EL
IEM3176I-3190I	Dictionary, Declare Pass 2	EL
IEM3199I-3213I	Dictionary, Declare Pass 2	EL
IEM3584I	48 Character Preprocessor	BX
IEM3840I	Compiler Control	AA
IEM3841I	Compiler Control	AA
IEM3842I	Compiler Control	AA
IEM3843I	Compiler Control	AA
IEM3844I	Compiler Control	AA
IEM3845I	Compiler Control	AA
IEM3846I	Compiler Control	AA
	Optimization	KA
IEM3847I	Compiler Control	AA
IEM3848I	Compiler Control	AA
IEM3849I	Compiler Control	AA
IEM3850I	Compiler Control	AA
IEM3851I	Compiler Control	AA
IEM3852I	Compiler Control	AA
IEM3853I	Compiler Control	AA
IEM3855I	Compiler Control	AA
IEM3856I	Compiler Control	AA
IEM3857I	Compiler Control	AA
IEM3858I	Compiler Control	AA
IEM3859I	Compiler Control	AA
IEM3860I	Compiler Control	AA
IEM3861I	Compiler Control	AA
IEM3862I	Compiler Control	AA
IEM3863I	Compiler Control	AA
IEM3864I	Compiler Control	AA
IEM3865I	Compiler Control	AA
IEM3866I	Compiler Control	AA
IEM3872I	Compiler Control	AA
IEM3873I	Compiler Control	AA
IEM3874I	Compiler Control	AA
IEM3875I	Compiler Control	AB
IEM3876I	Compiler Control	AA
IEM3877I	Compiler Control	AB
IEM3878I	Compiler Control	AA
IEM3880I	Compiler Control	AA
IEM3887I	Compiler Control	AA
IEM3888I	Compiler Control	AB
IEM3889I	Compiler Control	AB
IEM3890I	Compiler Control	AA
IEM3891I	Compiler Control	AA
IEM3892I	Compiler Control	AA
IEM3893I	Compiler Control	AA
IEM3894I	Compiler Control	AA
IEM3895I	Compiler Control	AA
IEM3896I	Compiler Control	AA
IEM3897I	Compiler Control	AA
IEM3898I	Compiler Control	AA
IEM3899I	Compiler Control	AL
IEM3900I	Compiler Control	AB
IEM3901I	Compiler Control	AB
IEM3902I	Compiler Control	AB
IEM3902I	Compiler Control	AB
IEM3903I	Compiler Control	AB
IEM3904I	Compiler Control	AA
IEM3905I	Compiler Control	AA
IEM3906I	Compiler Control	AA
IEM3907I	Compiler Control	AA
IEM3908I	Compiler Control	AA
IEM3909I	Compiler Control	AL
IEM3910I	Compiler Control	AB
IEM3911I	Compiler Control	AB
IEM3912I	Compiler Control	AB
IEM3913I	Compile-time Processor	AB
IEM3914I	Compile-time Processor	AB
IEM4106I	Compile-time Processor	AS
IEM4109I	Compile-time Processor	AS
IEM4112I	Compile-time Processor	AS
IEM4115I	Compile-time Processor	AS
IEM4118I	Compile-time Processor	AS
IEM4121I	Compile-time Processor	AS,BC,BG
IEM4124I	Compile-time Processor	BC,BG
IEM4130I	Compile-time Processor	BG
IEM4133I	Compile-time Processor	BC

IEM4134I Compile-time Processor BC
IEM4136I Compile-time Processor BC
IEM4139I Compile-time Processor BC
IEM4142I Compile-time Processor BC
IEM4143I Compile-time Processor BC
IEM4148I Compile-time Processor BC
IEM4150I Compile-time Processor BC
IEM4151I Compile-time Processor BC
IEM4152I Compile-time Processor BC
IEM4153I Compile-time Processor BC
IEM4154I Compile-time Processor BC
IEM4157I Compile-time Processor BC
IEM4160I Compile-time Processor BC
IEM4163I Compile-time Processor BC
IEM4166I Compile-time Processor BC
IEM4169I Compile-time Processor BC
IEM4172I Compile-time Processor BC
IEM4175I Compile-time Processor BC
IEM4176I Compile-time Processor BC
IEM4178I Compile-time Processor BC
IEM4184I Compile-time Processor BC
IEM4187I Compile-time Processor BC
IEM4188I Compile-time Processor BC
IEM4190I Compile-time Processor BC
IEM4193I Compile-time Processor BC
IEM4196I Compile-time Processor BC
IEM4199I Compile-time Processor BC
IEM4202I Compile-time Processor BC
IEM4205I Compile-time Processor BC
IEM4208I Compile-time Processor BC
IEM4211I Compile-time Processor BC
IEM4212I Compile-time Processor BC
IEM4214I Compile-time Processor BC
IEM4215I Compile-time Processor BC
IEM4217I Compile-time Processor BC
IEM4220I Compile-time Processor BC
IEM4223I Compile-time Processor BC
IEM4226I Compile-time Processor BC
IEM4229I Compile-time Processor BC
IEM4232I Compile-time Processor BC
IEM4235I Compile-time Processor BC
IEM4238I Compile-time Processor BC
IEM4241I Compile-time Processor BC
IEM4244I Compile-time Processor BC
IEM4247I Compile-time Processor BC
IEM4248I Compile-time Processor BC
IEM4250I Compile-time Processor BC
IEM4253I Compile-time Processor BC
IEM4254I Compile-time Processor BC
IEM4256I Compile-time Processor BC
IEM4259I Compile-time Processor BC
IEM4262I Compile-time Processor BC
IEM4265I Compile-time Processor BC
IEM4271I Compile-time Processor BC
IEM4277I Compile-time Processor BC
IEM4280I Compile-time Processor BC
IEM4283I Compile-time Processor BC
IEM4286I Compile-time Processor BC
IEM4289I Compile-time Processor BC
IEM4292I Compile-time Processor BC
IEM4295I Compile-time Processor BC
IEM4296I Compile-time Processor BC
IEM4298I Compile-time Processor BC
IEM4299I Compile-time Processor BC
IEM4301I Compile-time Processor BC
IEM4304I Compile-time Processor BC
IEM4307I Compile-time Processor BC
IEM4310I Compile-time Processor BC
IEM4313I Compile-time Processor BC
IEM4319I Compile-time Processor BC
IEM4322I Compile-time Processor BC
IEM4325I Compile-time Processor BC
IEM4326I Compile-time Processor AV
IEM4328I Compile-time Processor BC
IEM4331I Compile-time Processor BC
IEM43321 Compile-time Processor BC
IEM4334I Compile-time Processor BC
IEM4337I Compile-time Processor BC
IEM4340I Compile-time Processor BC
IEM4343I Compile-time Processor BC
IEM4346I Compile-time Processor BC
IEM4349I Compile-time Processor BC
IEM4352I Compile-time Processor BC
IEM4355I Compile-time Processor BC
IEM4358I Compile-time Processor BC
IEM4361I Compile-time Processor BC
IEM4364I Compile-time Processor BC
IEM4367I Compile-time Processor BC
IEM4370I Compile-time Processor BC
IEM4373I Compile-time Processor BC
IEM4376I Compile-time Processor BC
IEM4379I Compile-time Processor BC
IEM4382I Compile-time Processor BC
IEM4283I Compile-time Processor BC
IEM4391I Compile-time Processor BC
IEM4394I Compile-time Processor BC
IEM4397I Compile-time Processor BC
IEM4400I Compile-time Processor BC
IEM4403I Compile-time Processor BC
IEM4406I Compile-time Processor BC
IEM4407I Compile-time Processor BC
IEM4409I Compile-time Processor BC
IEM4412I Compile-time Processor BC
IEM4415I Compile-time Processor BC
IEM4421I Compile-time Processor BC
IEM4433I Compile-time Processor BG
IEM4436I Compile-time Processor BG
IEM4439I Compile-time Processor BG
IEM4448I Compile-time Processor BG
IEM4451I Compile-time Processor BG
IEM4452I Compile-time Processor BG
IEM4454I Compile-time Processor BG
IEM4457I Compile-time Processor BG
IEM4460I Compile-time Processor BG
IEM4463I Compile-time Processor BG
IEM4469I Compile-time Processor BG
IEM4472I Compile-time Processor BG
IEM4473I Compile-time Processor BG
IEM4475I Compile-time Processor BG
IEM4478I Compile-time Processor BG
IEM4481I Compile-time Processor BG
IEM4484I Compile-time Processor BG
IEM4499I Compile-time Processor BG
IEM4502I Compile-time Processor BG
IEM4504I Compile-time Processor BG
IEM4505I Compile-time Processor BG
IEM4506I Compile-time Processor BG
IEM4508I Compile-time Processor BG
IEM4511I Compile-time Processor BC
IEM4514I Compile-time Processor BG
IEM4517I Compile-time Processor BG
IEM4520I Compile-time Processor BG
IEM4523I Compile-time Processor BG
IEM4526I Compile-time Processor AS
IEM4529I Compile-time Processor BC,BG
IEM4532I Compile-time Processor AS

| IEM4535I Compile-time Processor AS
IEM4547I Compile-time Processor AV
IEM4550I Compile-time Processor BG
IEM4553I Compile-time Processor BG
IEM4559I Compile-time Processor BG
IEM4562I Compile-time Processor BG
IEM4570I Compile-time Processor BG
IEM4572I Compile-time Processor BG
IEM4574I Compile-time Processor BG
IEM4576I Compile-time Processor BG
IEM4578I Compile-time Processor BG
IEM4580I Compile-time Processor BG

APPENDIX J: COMPILE-TIME PROCESSOR

This appendix describes, for the Compile-time Processor Logical Phase, the internal formats of text and tables, communication region use, Operating System interfaces and compiler control interfaces.

1. INTERNAL FORMATS OF TEXT

The internal format of text used by the compile-time processor is EBCDIC. As source input is read into storage, non-macro text is moved directly into text blocks after translation to internal format. Encoded compile-time statements and line numbers are also placed in text blocks.

Format of a Dictionary Entry

The compile-time processor uses a set of chained dictionary entries. Hashing techniques are used to add an item to the dictionary or to search for an entry. A compile-time processor dictionary item is a variable-length item with the following skeletal format:

The fields defined in this skeleton have the following meaning and usage:

LENGTH: The length of the EBCDIC name. If the item has no name (e.g., a constant) this field is zero.

PROC NO.: The number assigned to the procedure in which the identifier was declared. Each procedure is assigned a unique number. The identifiers in the non-procedural text are given the procedure number 1. The built-in function SUBSTR is given the procedure number 0.

HASH-CHAIN-POINTER: The dictionary address of the next item on this hash chain. This address is zero if no item follows.

TYPE: A byte which gives the attributes of the entry. The bits (if on) have been assigned the following meanings:

BIT	MEANING
0	fixed
1	character
2	bit
3	entry
4	label
5	INCLUDE identifier
6	iterative DO
7	constant

VALUE/VALUE-POINTER: If the item is fixed, this contains the value proper stored as a five-digit packed decimal number. Otherwise it contains a pointer to the value stored in IVBs. The definition of value for the various kinds of entries is given below. For a fixed macro variable, this contains the value. For a character variable, it contains a pointer to IVBs containing the value. For a procedure, it points to the text-block location of the code.

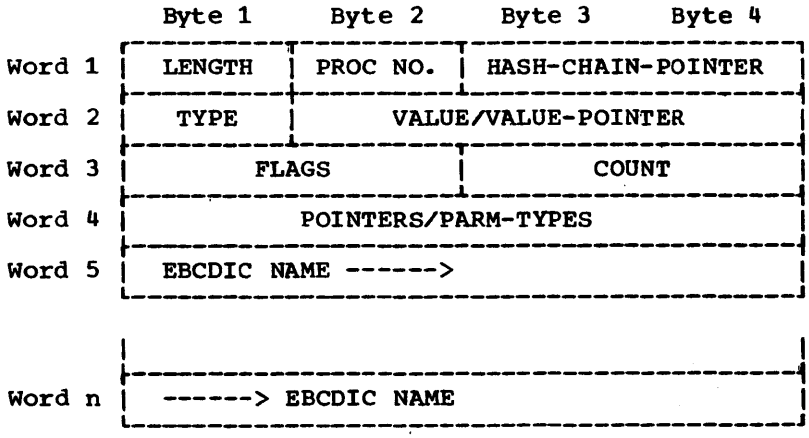

For a label, it points to the text-block location of the label. If references to the label are found before the label is discovered, the value pointer temporarily points to a chain of IVBs with a description of every GOTO transferring to this label. This information is processed and discarded when the label is found. For an INCLUDE identifier, it points to the beginning of the included text.

FLAGS: This set of bits provides additional information about the use of the item. They are used as follows:

BIT	MEANING
0	special entry bit
1	DECLARE encountered (Phase BC)
2	procedure body encountered (Phase BC)
3	parameter
4	used to indicate a procedure called by Phase II scan.
5	DECLARE encountered (Phase BG)
6	unused
7	ACTIVATE bit
8	"in-use" bit
9	"indirect reference" bit
10	"undefined" bit for multiple declarations
11	left-hand side (LHS bit)

This field occupies a half-word.

COUNT: For a procedure entry, this field contains a count of the number of parameters for the procedure. For INCLUDE identifier it is zero initially, and subsequently contains the initial line number assigned to the included text.

POINTERS/PARAM-TYPES: For a procedure, the field contains an encoding of the type information for each formal parameter. Two bits are reserved for each parameter. One indicates fixed; the other indicates character. If neither bit is set, this indicates that the entry declaration did not specify attributes for the parameters.

For a label, word 4 contains two pointers to dictionary items. One points to the dictionary entry for the immediately embracing iterative DO. The second half-word contains a pointer to the dictionary entry for the immediately embracing INCLUDE. This provides a method of checking the legality of GOTOs.

For an INCLUDE identifier, only the pointer to the immediately embracing INCLUDE is kept.

During Phase I, word 4 is used for labels and simple variables to hold two pointers. These form a bi-directional chain of all labels and variables having the same procedure number which have been used but not defined. This information is used only in Phase I and can therefore be overlaid.

EBCDIC NAME: A variable length field, containing the EBCDIC name of the item. If the item has no name, this field is not included.

Format of an Identifier Value Block (IVB)

To hold character and bit string values, some text blocks are organised into sub-blocks of 32 bytes each. Of these 32 bytes, 27 are used to hold values or parts of values. The first byte is used to hold a copy of the last character in the preceding IVB. This copy is made to facilitate backup. The last four bytes consist of a condition code of one byte followed by a 3-byte chain pointer. A set of these sub-blocks, chained together, is used to hold a value. The condition byte is 27 for all except the last sub-block in a value. In this last condition code byte the first bit is set to 1 to indicate "end-of-value." The remaining bits are a count of the significant bytes in the sub-block. There is a maximum of 27 significant bytes in an IVB.

The chain address is used to point to the next sub-block in a value. The meaning of the chain address in the last sub-block in a chain depends on how the chain is being used.

These small chained sub-blocks are referred to as "identifier value blocks," or IVBs.

Text blocks are allocated to hold IVBs as the need arises. Those IVBs not currently in use are chained together into an availability chain and are re-used when needed.

An example of a character string value held in IVBs is shown. The character string, which starts with AB and ends with CD, is 28 characters long. Two IVBs are thus required to hold the value. The string AB...C is put into the first IVB, while the last character, D, is put into another IVB. The condition code byte of

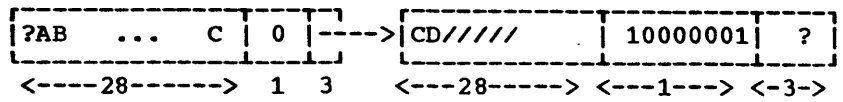

the first IVB is 27. The second condition code byte is 10000001. The first "1" indicates end-of-value, while 0000001 is a count of the significant characters in the IVB.

Besides holding character-string values, IVBs are used in many places by the compile-time processor to hold information which must be chained from a dictionary entry and which is of indefinite length. These uses are noted elsewhere.

Instruction Codes for the Compile-time processor

Compile-time statements are handled in two parts. During Phase BC, each statement is recognized and syntax checked. An encoded form of the statement is then placed into the current text block. During Phase BG these encoded statements are executed by an interpreter.

All expressions are encoded in postfix Polish. A stack is used during Phase II to hold all operands. Conversions are done in Phase BG.

Thus the expression (A+B)||C, for example, is turned into

```
A B + C||
```

To be more explicit, it is turned into the instructions

```
PUSH A;

PUSH B

ADD;

PUSH C;

CONCAT
```

The PUSH operator pushes its operand onto the phase II stack. This stack consists of 150 full words in scratch storage. The first byte of each call is a status byte; the last three bytes hold the value if the item is FIXED, a pointer if the item is CHARACTER or BIT, or an indirect reference to a dictionary entry if the indirect bit is on.

The bits of the status byte have the following meaning if set to one:

BIT	MEANING
0	FIXED
1	CHARACTER
2	BIT
3	Indirect reference (i.e., points to a dictionary entry)
4	Character string value does not "belong" to the stack and should not be erased when stack is popped. (Shared with Phase BG scan.)

Bits 6-8 are unused by the interpreter. They are reserved for Phase BG scan.

All instructions generated by the Phase BC code generators begin with an operation byte. Depending on the operation, it may be followed by zero or more bytes of information which are intrinsically part of the instruction. Each instruction may have either or both of the characteristics STACK and FIXED. The definition of these characteristics follows:

1. STACK. These instructions consist only of the one-byte operator. They take their operands, if any, from the Phase II stack. These operators correspond in general to the PL/I arithmetic and string operators. Depending on whether they are unary or binary, they use the top one or two items on the stack. Before these operands are used, they are converted, if necessary, in place to the required type. After the items are used they are popped from the stack. The result of the operation is pushed onto the stack.

   The conversion, the popping, and the pushing are all implied for a stack operator.

2. FIXED LENGTH. These operations are followed by a fixed number of bytes -- usually two. These bytes, which usually refer to a dictionary entry, serve as the operand(s) of the instruction.

The table below shows the operations that are to encode macro instructions. The operand description indicates only the general operand type for a variable-length item. The count byte is omitted.

MNEMONIC	TYPE	OPERAND DESCRIPTION	FUNCTION
ADD	STACK	BINARY; OPERANDS, RESULT FIXED	A+B
SUB	STACK	BINARY; OPERANDS, RESULT FIXED	A-B
MUI	STACK	BINARY; OPERANDS, RESULT FIXED	A*B
DIV	STACK	BINARY; OPERANDS, RESULT FIXED	A/B
UNMIN	STACK	UNARY; OPERAND, RESULT FIXED	-B
UNPLS	STACK	UNARY; OPERAND, RESULT FIXED	+B
ASSIGN[1]	STACK FIXED	UNARY; B CONVERTED TO TYPE OF A	A=B (assignment)
NOT	STACK	UNARY; OPERAND, RESULT BIT	¬B
AND	STACK	BINARY; OPERANDS, RESULT BIT	A&B
OR	STACK	BINARY; OPERANDS, RESULT BIT	A|B
CONCAT	STACK	BINARY; OPERANDS, RESULT CHAR	A||B
EQU[2]	STACK	BINARY; OPERANDS, RESULT VARY	A=B (equality)
GT[2]	STACK	BINARY; OPERANDS, RESULT VARY	A>B
LT[2]	STACK	BINARY; OPERANDS, RESULT VARY	A<B
INC	FIXED	Two-byte dictionary reference	INCLUDE A
ABORT	FIXED	One-byte code	ABORT processing
TRA	FIXED	Two-byte dictionary reference	Transfer to label
TRAC	FIXED	Two-byte dictionary reference	Transfer to label
TRAF[3]	STACK FIXED	Two-byte dictionary reference	Transfer to label if top of stack false.
INV[5]	STACK FIXED	Two-byte dictionary reference and a one-byte argument count	Invokes the procedure
TRAI[4]	FIXED	two two-byte dictionary references	Transfer out of INCLUDE
PUSH	FIXED	Two-byte dictionary reference	Push A onto stack
PUSHI	FIXED	Two-byte dictionary reference	Push address of A onto stack
UPDT	FIXED	Three-byte line count	Put line count into LINCNT
ENTM	FIXED	no operand	Enter interpreter
RTNS	FIXED	no operand	Return to Phase II scan
ENB	FIXED	Two-byte dictionary references	ACTIVATE A
DSB	FIXED	Two-byte dictionary references	DEACTIVATE A
DCL	FIXED	Dictionary reference	DECLARE A
NOPD	FIXED	Dictionary reference	No-ops the DECLARE, once executed

MNEMONIC	TYPE	OPERAND DESCRIPTION	FUNCTION
CVT[6]	FIXED	Dictionary reference	Convert to RETURNS attribute
RETN[7]	FIXED	Dictionary reference	Return from procedure A

[1]The ASSIGN operator does not push a result. The expression result is found on the PDS and is popped; the dictionary reference for the left hand side is the single argument.

[2]Operand conversion for EQU, GT, and LT is as specified in IBM System/360 Operating System: PL/I Language Specifications.

[3]The TRAF uses and pops the top operand on the stack. It is treated as a bit string for conditional transfers.

[4]This handles GOTOs out of included text. At this point CLNUP is performed. The arguments are (a) the dictionary entry for the label to which control is to pass; and (b) the dictionary entry for the current INCLUDE.

[5]The arguments for the invocation are contained on the stack. The dictionary reference is to the procedure entry.

[6]This converts the top of the stack to the attributes specified in the RETURNS attribute for the procedure A.

[7]This terminates the invocation of procedure A and converts the value on the top of the stack to the attribute specified on the PROCEDURE statement.

2. COMMUNICATIONS REGION USE

The region from offset 0 to offset 304 (ZCOMM) is used as a general communications region throughout the compiler, including the compile-time processor. The region from ZCOMM to ZCOMM+463 is also used by the compiler; however, during the compile-time processor phase, this region is used exclusively by the compile-time processing. The details of this usage are shown below.

Name	Dec. Offset	Length	Contents
STATUS	ZCOMM	1	Byte 1: Bit 0 not used 1 PROCSW -- processing macro procedure Note: 2 FINDBIT -- SRHDIC has found dictionary item Condition 3 ERSW -- diagnostic produced in Phase II Settings 4 EFSW -- end of file encountered (input) "1" = set 5 LEVBIT -- processing IVB "0" = off 6 INCSW -- processing included text 7 PH2SW -- in Phase II
STA2	ZCOMM+1	1	Byte 2: Bit 0 OLDINC -- processing already listed INCLUDE 1 SKPSW -- indicates entry to END from PRCSCN 2 NOPERCENTSW -- look ahead for % completed 3 SYSOPN -- SYSLIB DCB is open 4 MACRO -- indicates current macro action 5 PR2SW -- indicates in macro procedure 7 ARG -- indicates that Phase II is looking for arguments of activated procedure
SUBSTRDR	ZCOMM+2	2	Holds dictionary reference of 0 level SUBSTR entry
TOKPTR	ZCOMM+4	4	Address of character being scanned, text reference or absolute, right justified
INCPTR	ZCOMM+8	4	Save area for TOKPTR
INBUF	ZCOMM+12	4	Absolute address of input buffer, right justified
OUTBUF	ZCOMM+16	4	Absolute address of output buffer, right justified
PDSPTR	ZCOMM+20	4	Absolute address to top of pushdown stack, right justified
ENDBUF	ZCOMM+24	4	Absolute address to last significant character in input buffer, right justified
WHERE	ZCOMM+28	4	Address of next available byte in output buffer, text reference or absolute, right justified
IVBPTR	ZCOMM+32	4	Text reference to next free IVB, right justified
LINCNT	ZCOMM+36	4	Holds current line number, right justified
TEMPTR	ZCOMM+40	2	Dictionary reference to top of "in-use" temporary stack
DCENTY	ZCOMM+42	2	Dictionary reference for chaining dictionary items
CURINC	ZCOMM+44	2	Dictionary reference to INCLUDE entry being processed
CURDO	ZCOMM+46	2	Dictionary reference to DO entry being processed
PROCNO	ZCOMM+48	1	Current procedure number, right justified
NXTPC	ZCOMM+49	1	Next available procedure number, right justified
DPHCNT	ZCOMM+50	2	Current depth count
CODE	ZCOMM+52	1	Code for token type
LENGTH	ZCOMM+54	2	Number of signifiant characters in TOKBUF, right justified
MXDPTH	ZCOMM+56	2	Integer value of depth of replacement, right justified
INDEX	ZCOMM+58	2	Hash table index for dictionary routines

Name	Dec. Offset	Length	Contents
ATTR	ZCOMM+60	2	"Type" byte for dictionary routines
GRSAVE	ZCOMM+64	4	Save area for GRG
NEWIVB	ZCOMM+68	4	Pointer to IVB chain to be freed or obtained
VALUE	ZCOMM+72	4	Type and value/value pointer for dictionary entries
PREINB	ZCOMM+76	4	Pointer to header information for INBUF
BUFSRT	ZCOMM+80	4	Pointer to left margin in INBUF
INIVB	ZCOMM+84	1	Current busy block number
OUTIVB	ZCOMM+85	1	Current busy block number
TXTBLK	ZCOMM+86	1	Current busy block number
INVBAB	ZCOMM+88	4	Current block used in absolute address calculation
OUTIVBAB	ZCOMM+92	4	Current block used in absolute address calculation
TXTBLKAB	ZCOMM+96	4	Current block used in absolute address calculation
MTABC	ZCOMM+100	4	Address of translate table for TOKSCN and FINDPC
TXTEST	ZCOMM+104	4	Length of text block adjusted for chain address
BUF1	ZCOMM+108	4	Pointer to first INCLUDE buffer
BUF2	ZCOMM+112	4	Pointer to second INCLUDE buffer
LIBDCB	ZCOMM+116	4	Pointer to DCB for SYSLIB data set
USRDCB	ZCOMM+120	4	Pointer to DCB for user data sets
MAXLCT	ZCOMM+124	4	Maximum line count used so far
PRCWHR	ZCOMM+128	4	Pointer to next byte in which to put procedure text
DCENTYAB	ZCOMM+132	4	Absolute address of dictionary entry
SCHK	ZCOMM+136	4	Pointer to level 1 SUBSTR entry
PROCCL	ZCOMM+140	2	Dictionary reference of procedure check list
OUTERCL	ZCOMM+142	2	Dictionary reference of outer check list
PROCCLDR	ZCOMM+144	2	Dictionary reference for PROCCL cell
OUTRCLDR	ZCOMM+146	2	Dictionary reference for OUTERCL cell
DECIDR	ZCOMM+148	4	Dictionary reference of dictionary entry for DECIMAL 1
CURPRC	ZCOMM+152	4	Pointer to current procedure entry on PDS
TOKBUF	ZCOMM+164	32	32-byte buffer, characters inserted left justified

Name	Dec. Offset	Length	Contents
HASTB	ZCOMM+300	128	64 two-byte dictionary references to hash chains for named items
CONSCH	ZCOMM+428	2	Dictionary reference to constant chain
SPECCH	ZCOMM+430	2	Dictionary reference to special chain -- debugging only

3. COMPILE-TIME PROCESSOR, OPERATING SYSTEM, AND COMPILER CONTROL INTERFACES

Although the compile-time processor makes considerable use of the Operating System facilities, it usually does so indirectly through the compiler control. However, those Operating System services required to support the INCLUDE facility are invoked directly. Since included text is required to be a member of a partitioned data set, it is those data management facilities which support BPAM which are used. Specifically the macros OPEN, FIND, CLOSE, READ and CHECK are used by various parts of the INCLUDE handler. Details of these macros can be found in IBM System/360 Operating System, Supervisor and Data Management Services.

The root phase is invoked by the compiler control if the MACRO option is specified. All subsequent communication between the compile-time phases and the compiler control is done by way of cells in the communications region. This includes the parameters passed to the F service routines, the decoded options which are tested, and the cells set to indicate the status of source margins and mode (EBCDIC) of the output.

Specifically, the following cells in the communications region are either used or set:

PAR1

PAR2

ZTV

ZMYNAM

MCSIZE

CCCODE

TXTSZ

ZSOR -- column number in which to begin scan of input text

ZMAG -- column number in which to end scan of input text

ZTRAN1

The following compiler control routines are referenced:

ZUPL	RELESE
ZURD	RLSCTL
ZUGC	ZTXTRF
ZUTXTC	ZTXTAB
ZURC	ZCHAIN
ZABORT	ZALTER
ZLOADW	ZDABRF
ZDICRF	ZEND
ZUERR	ZUBW
ZDRFAB	

The purpose of these routines is to permit the user to build, scan and otherwise manipulate tables in text blocks without any concern for physical block boundaries, status of text blocks or maintaining pointers to first, last and current table entries. The routines also handle text, which is assumed to be a special type of table.

The user may:

1. Define a table by using the IEMKTCA macro to set up a TCA (task communication area) control block. The address of the TCA is always passed to a table handling routine and identifies the table concerned. Most TCAs will be held in the local communications region in phase KA.

2. Add new entries to the end of a table. Table entries may be of fixed or varying lengths. For fixed length entries, the length is held in the TCA for the table. For varying length entries, the TCA contains information enabling the routine to determine the length of the entry. Fixed length entries may be built in storage and moved into the table by the routines, or space allocated for an entry by the routines and the entry built directly into the table. For varying length entries, the entry must be built in storage and moved into the table by the routines.

3. Scan a table either forwards or backwards. The user requests the address and text reference of the 'next' table entry. The user may position a scan to the start or end of a table, or to some intermediate point.

4. Reference individual table entries at random. This may be done while a sequential scan of the table is being performed, and will not affect the scan.

5. Specify that a table is to be deleted.

6. Specify that entries are to be 'locked in'. This means that the absolute address of a table entry will remain valid until the entry is explicitly or implicitly unlocked, or the table is deactivated. (See 7). If an entry is not 'locked in', any subsequent call to the table handling routines may render the absolute address returned for the entry invalid. The current entry of a sequential scan, either creating or reading, is automatically 'locked in'.

   A randomly referenced entry is only locked by an explicit lock request.

   A current scan entry may be unlocked explicitly by deactivating the table, or implicitly by making or requesting the next entry, or repositioning the scan.

   A random entry may be explicitly unlocked, or implicitly unlocked by another random reference to the same table specifying lock.

   All locks are released when a table is deactivated. The total number of locked entries for all tables must not exceed four at any one time.

7. Activate or deactivate a table. All tables are initially deactivated. Tables are always activated implicitly, initially by a request to add an entry to the table, and subsequently by any valid request for an operation to be performed on that table.

   A table may be deactivated by an explicit request. Deactivation causes all locked entries to be unlocked, and renders all absolute addresses of entries in that table invalid. Sequential scans are not otherwise affected.

   A table is implicitly deactivated by a request to free the table (as in 5), or if the table contains no locked entries and any call is made to the table handling routines.

DESCRIPTION AND FORMAT OF MACRO-INSTRUCTIONS

The IEMKTCA Macro

This macro is used to set up a TCA (table control area) control block describing a table to be processed by the table handling routines. The macro has two functions:

1. Sets up global variables describing tables which are used by the IEMKTAB macro to generate appropriate linkages to the table handling routines.

2. Used with the R operand to set up a TCA control block the address of which is passed to the table handling routines to identify the table. The 'table identifier' is the same as the 'table2 identifier' used in IEMKTAB macro instructions. It must also be the label of a fullword containing, at execution time, the address of the TCA set up by a IEMKTCA macro instruction with the R operand.

Format:

```
                                                    (F)
table identifier IEMKTCA [,R,]ET=                   (V)
                                                    (T)
  [,L=entry length][,OPS=[S][R]]

    [,NPTRS=no of scan pointers.]
    [,DLF=displacement to length field]
```

Description of Parameters

Parameter	Description
ET=entry type T - text	This parameter indicates the type of entry contained in the table, as follows: F - fixed length entries V - variable length entries
L=entry length	This parameter is required if ET=F is coded, and indicates the length of an entry.
OPS=operations	This parameter indicates the type of operations to be performed on the table, as follows: s - sequential scans will be performed R - random references will be made
NPTRS=n	This parameter permits more than one sequential scan of one table to be made at one time. 'n' indicates the maximum number of sequential scans which will be in progress at any one time. An individual scan is identified by coding PTR=n in the SET, SETZ or SCAN operation (see IEMKTAB) macro). The default value is n=1 if OPS=S or RS is coded, or OPS is omitted, otherwise n=0. If ET=T is coded, this parameter must be omitted and only one scan is permitted.
DLF=disp. to length field	This indicates the displacement from the first byte of the entry to the two byte field containing the length of the entry. It must must be coded if ET=V is coded.
R	This parameter is supplied only if actual code is to be generated from the macro instruction. It provides a label for the TCA which may be used in an A type address constant having the label identifier as its label.

Example of use:

```
TABLE1 DC A(ATAB1)

TABLE1 DTCA ATAB1,ET=F, L=8, OPS=S
```

Note: the label on the IFMKTCA macro-instruction statement is not made the label of any generated statement, so no multiple definition will result. Its only use is to provide a link between the two macros IEMKTCA and IEMKTAB.

The IEMKTAB Macro

This macro specifies operations to be performed on a table or tables. The table to be operated on is always specified by supplying the address of its TCA.

Format:

[label] IEMKTAB code, parameters

Note: 'code' specifies the type of operation, and the parameters depend on this as shown below:

Code	Parameters
BLDC	Table Identifier, address of entry skeleton [,AATO=] [,SATO=]
BLDT	Table Identifier [,AATO=] [,SATO=]
DR	Table Identifier, SA=[,AATO=] [,OPT=(L)(N)]
ULDR	(Table Identifier,...) or Table Identifier
SET	Table Identifier, SA=[,PTR=n]
SETZ	Table Identifier [,OPT=(B)(F)] [,PTR=n]
SCAN	Table Identifier [,AATO=] [,SATO=] [,OPT=(B)(F)] [,PTR=n][,ETA=] [,TRTAB=,FBTO=] [,PSATO=]
FREE	(Table Identifier,...) or Table Identifier
DEACT	(Table Identifier,...) or Table Identifier
TEST	Table Identifier, NTA=

Notes:

The 'Table Identifier' operand must appear in the label field of a IEMKTCA macro-instruction physically preceding the IEMKTAB macro-instruction. The last three operands of the SCAN operation (TRTAB, FBTO, PSATO) only apply to text tables ET = T in IEMKTCA).

Description of Keyword Parameters

Keyword Parameter	Description
AATO	A register designation or address of a fullword in which the returned absolute address is to be placed.
SATO	Address of a three byte field in which the returned symbolic address is to be placed.
SA	Address of a three byte area containing a symbolic address.
OPT	Options applying to this operation. The option letters may appear in any order.
PTR	Specifies the pointer which identifies the current record of the scan. 'n' must not exceed the number specified in the NPTRS parameter of the IEMKTCA macro-instruction. C indicates the end of table pointer for creating new entries.
ETA	Specifies the address of a routine to be given control when the end of a table is detected during a sequential scan.
TRTAB	Address of translate table for selective scan.
FBTO	Location or register in which non-zero function byte from translate operation is to be placed.
PSATO	Address of a three byte area into which the symbolic address of the previous entry is to be placed.
NTA	Address of routine to receive control if table is null.

Note: A register designation (absolute expression in parentheses) identifying general registers 2-9 may be used in the AATO, SATO, SA, ETA, FBTO, PSATO and NTA operands.

Description of Table Handling Operations

Operation	Description
BLDC	Adds an entry to the end of a table. The entry is built in storage by the user and moved to the table by the table handling routines. The routines return the symbolic and absolute addresses of the new entry.
BLDT	The table handling routines allocate space for a new entry at the end of the specified table, and return the absolute and symbolic addresses of the space. The user builds his entry in the space allocated. This operation can only be specified if ET=F was coded in the IEMKTCA macro-instruction.
DR	Direct (random) reference. The entry is identified by the SA parameter. The absolute address of the entry is returned. If OPT=L is specified, the entry is locked in.
ULDR	The last directly referenced entry for this table that specified OPT=L, is unlocked.
SET	The sequential scan is positioned at the entry identified by the SA parameter. The next SCAN operation causes the absolute address of this entry to be returned. PTR=n (see SETZ).
SETZ	The sequential scan is positioned to tbe beginning of the table if the OPT parameter is omitted or OPT=F is coded, or to the end of the table if OPT=B is coded. The next SCAN operation returns the absolute address of the first or last table entry to be returned. The PTR=n parameter indicates which sequential scan is meant if more than one is in progress at one time. 'n' may not exceed the number specified in the NPTRS parameter of the IEMKTCA macro-instruction. PTR=1 is assumed if the parameter is omitted. OPT=B may not be coded if ET=V or T is coded in the IEMKTCA macro-instruction for the table.
SCAN	The symbolic and absolute addresses of the next entry in the table are returned. If a SET or SETZ was the last operation, the next entry is that pointed to by the SET or SETZ operations. The options F or B indicate: F a forward scan is required. This is the default. B a backward scan is required. This may only be specified if ET=F is coded in the IEMKTCA macro-instruction.

Selective Scanning Facilitiy

This facility is available for text tables only (ET=T in IEMKTCA macro-instruction). The TRTAB operand identifies a 256 byte translate table which is used to translate the code byte of the entry. If the result is zero, the scan continues until the routine exits to the ETA address. If the result is non-zero, it is placed in the register or location identified by the FBTO operand, and control returns to the user, the AATO and SATO operands identifying the selected entry.

Code	Description
FREE	One or more tables are completely freed and deactivated. The next operation on the table must be a BLDC or BLDT.
DEACT	The table or tables are deactivated. All locked entries are unblocked and all absolute addresses of entries rendered invalid.
TEST	Tests for a null table. If table is null, control is passed to routine identified by NTA pointer.

APPENDIX L: CONTROL ROUTINES

Entry to the various compiler control routines is via a transfer vector. Details of the transfer vector appear below.

Hex. Offset	Name	Description
8	ZUPL	Print a line
C	ZURD	Read a card
10	ZUGC	Get scratch storage
14	ZUTXTC	Get text block
18	ZURC	Release scratch storage
20	ZABORT	Dump and go to error message routines
24	ZLOADW	Load and return to caller
28	ZDICAB	Make dictionary entry. Absolute address returned
2C	ZDICRF	Make dictionary entry. Dictionary reference returned
30	ZUERR	Make error message entry
34	ZDRFAB	Convert dictionary reference to absolute address
38	ZLOADX	Load with overlay and return to caller
40	REQUEST	Give a list of phase names required or not wanted for this compilation
44	RELESE	Release all named phases
48	RLSCTL	Release all named phases and pass to next phase
4C	ZDUMP	Dump specified main storage and continue
50	ZTXTRF	Converts absolute address to text reference
54	ZTXTAB	Convert text reference to absolute address
58	ZCHAIN	Find next block in chain
5C	ZALTER	Change text block status
60	ZDABRF	Convert absolute address to dictionary reference
64	ZNALRF	Make unaligned dictionary entry. Reference returned
68	ZNALDB	Make unaligned dictionary entry. Absolute address returned
6C	ZEND	Terminate job
70	ZULF	Write on load file
74	ZUSP	Write on punch
78	ZUBW	Write on auxiliary storage
80	RLSCTLX	Release all named phases and hand control to the next phase, after having loaded it with overlay
84	RECONS	Reconstitute instructions in IEMAL
88	DYNAMIC	Pass control to the dynamic dump routines, if required
8C	IEMAL/ IEMAN	Address of second control phase

COMPILER CONTROL ROUTINES

Name	Hex. Offset	Details
RELESE	44	Description Deletes list of phases Parameters Passed PAR1 byte 0 unused 1-3 address of list of phases to be deleted. The list of phase names, each of two characters, is terminated by the name ZZ Parameters Returned None
RFQEST	40	Description Marks phases as 'wanted' or 'not wanted' Parameters Passed PAR1 byte 0 unused 1-3 address of list of phases to be marked as 'wanted' PAR2 byte 0 unused 1-3 address of list of phases to be marked as 'not wanted' Parameters Returned None Notes A phase list containing only 'ZZ' is effectively a null list. During module AM phases of the compiler are all marked as either normally loaded or not loaded. A phase which is normally not loaded is only loaded if it has previously been marked as 'wanted'. A phase which is normally loaded will always be loaded unless it has previously been marked as 'not wanted'

Name	Hex. Offset	Details
RLSCTL	48	Description Deletes a list of loaded phases and passes control to next phase Parameters Passed PAR1 byte 0 unused 1-3 address of list of phases to be deleted before next phase is loaded PAR2 byte 0 unused 1-3 (a) zero, if next phase is to be taken from compiler control phase directory (b) address of phase name to be loaded next Parameters Returned (to next phase) PAR1 byte 0 unused 1-3 address of new phase load point Notes List of phases given by the address in PAR1 is deleted. Then the next phase is selected and loaded and control is passed to a point two bytes from the load point of the new phase
RLSCTLX	80	Description Releases all named phases and passes control to next phase. The next phase may be loaded more than once Parameters Passed PAR1 byte 0 unused 1-3 address of list of phases to be deleted before next phase is loaded PAR2 byte 0 unused 1-3 (a) zero of next phase is to be taken from compiler control phase directory (b) address of phase to be loaded next Parameters Returned (to next phase) PAR1 byte 0 unused 1-3 address of load point of new phase Notes 1. List of phases given by the address in PAR1 is deleted. The next phase is selected and loaded and control is passed to a point two bytes from the load point of the new phase 2. The entry point RLSCTLX does not cause the compiler control routines to advance the pointer in the table of phases still to be loaded, and does not cause the phase to be marked as already loaded once

Name	Hex. Offset	Details
ZABORT	20	Description Deletes currently loaded phases (after dumping if DP specified in parameter) and passes control to Error Editor Parameters Passed None Parameters Returned None
ZALTER	5C	Description Changes text block status Parameters Passed PAR1 byte 0 unused 1 text block number 2-3 unused PAR2 bytes 0-2 unused 3 status required bits 0-3 unused 4 X'4' 'busy' 5 X'3' 'wanted' 6 X'2' 'not wanted' 7 X'1' 'free' Parameters Returned PAR2 is unaltered and may be used in successive calls without reloading Notes 1. Terminology: 'busy' - lock into storage i.e., address preserved 'Wanted' - information required, do not spill unless necessary 'Not wanted' - information required, block may be spilt 'Free' - information no longer required

Name	Hex. Offset	Details
ZCHAIN	58	Description Finds next text block in chain Parameters Passed PAR1 byte 0 unused 1 current block number 2-3 unused PAR2 bytes 0-2 unused 3 status required for old block Parameters Returned PAR1 byte 0 unused 1-3 text reference of start of new block PAR2 byte 0 unused 1-3 absolute address of start of new block Note The new text block is marked as busy
ZDABRF	60	Description Converts absolute address to dictionary reference Parameters Passed PAR1 bytes 0-1 unused 2-3 any reference in the same dictionary block PAR2 byte 0 unused 1-3 absolute address to be converted Parameters Returned PAR1 bytes 0-1 unused 2-3 dictionary reference corresponding to absolute address Notes 1. No check is made that this address is the start of a dictionary entry, or that it is any other specific point 2. No check is made that the address is in the same block as the dictionary reference passed. If this is the case, that is, the parameters passed are in error, the dictionary reference returned may not correspond to the address

Name	Hex. Offset	Details
ZDICAB	28	Description Makes aligned dictionary entry and returns absolute address Parameters Passed PAR1 byte 0 unused 1-3 address of entry (as built by calling phase) PAR2 bytes 0-1 unused 2-3 length of entry (binary) Parameters Returned PAR1 byte 0 unused 1-3 dictionary entry address PAR4 bytes 0-1 unused 2-3 reference to some point in the same dictionary block Notes 1. The entry built is constructed complete with code byte and length fields. The length passed in PAR2 is the length of the complete entry 2. ZDICRF performs the same function and returns more information, with no loss in efficiency
ZDICRF	2C	Description Makes an aligned dictionary entry and returns its dictionary reference and absolute address Parameters Passed PAR1 byte 0 unused 1-3 address of entry PAR2 bytes 0-1 unused 2-3 length of entry (binary) Parameters Returned PAR1 bytes 0-1 unused 2-3 dictionary reference of entry PAR4 byte 0 unused 1-3 dictionary entry address Notes See ZDICAB

Name	Hex. Offset	Details
ZDRFAB	34	Description Converts dictionary reference to absolute address Parameters Passed PAR1 bytes 0-1 unused 2-3 dictionary reference Parameters Returned PAR1 byte 0 unused 1-3 absolute address
ZDUMP	4C	Description Dumps specified storage and continues Parameters Passed PAR1 byte 0 X'00' 1-3 unused PAR3 bytes 0-3 either (a) zero or (b) address of a page heading to be printed Parameters Returned None Notes 1. The areas to be dumped, and the editing to be done on them, is given in the DUMP parameter to the compilation 2. The dump is only produced if the two character name in ZMYNAM matches one of the phase names specified in the DUMP parameter 3. The message "PHASE zz COMPLETED" is printed if 'P' is included in the DUMP parameter even thougth control is returned to the point of invocation in the phase 4. The registers printed by the dump routine are not necessarily as when control was passed from the calling phase
ZEND	6C	Description Terminates compilation immediately Parameters Passed None Parameters Returned None

Name	Hex. Offset	Details
ZLOADW	24	Description Loads phase and returns control to calling phase Parameters Passed PAR1 byte 0 unused 1-3 address of name of phase to be loaded Parameters Returned PAR1 byte 0 unused 1-3 address of phase load point Notes 1. Control is returned to calling phase, not to phase just loaded 2. The entry point ZLOADW causes the phase loaded to be marked as such, and therefore cannot be loaded again (see ZLOADX)
ZLOADX	38	Description Loads phase and control is returned to calling phase Parameters Passed PAR1 byte 0 unused 1-3 address of name of phase to be loaded Parameters Returned PAR1 byte 0 unused 1-3 address of phase load point Notes 1. Control is returned to calling phase, not to phase loaded 2. The phase loaded may be loaded again, since it is not marked as loaded by this entry point (see ZLOADW)

Name	Hex. Offset	Details
ZNALAB	68	Description Makes unaligned dictionary entry and returns absolute address Parameters Passed PAR1 byte 0 unused 1-3 address of entry PAR2 bytes 0-1 unused 2-3 length of entry (binary) Parameters Returned PAR1 byte 0 unused 1-3 dictionary entry address PAR4 bytes 0-1 unused 2-3 reference to some point in the same dictionary block Notes 1. The entry is constructed exactly as it will appear in the dictionary, complete with code byte and length field 2. ZNALRF performs the same function and returns more information, with no loss in efficiency
ZNALRF	64	Description Makes unaligned dictionary entry and returns its dictionary reference and absolute address Parameters Passed PAR1 byte 0 unused 1-3 address of entry PAR2 bytes 0-1 unused 2-3 length of entry (binary) Parameters Returned PAR1 bytes 0-1 unused 2-3 dictionary reference of entry PAR4 bytes 0 unused 1-3 dictionary entry address Notes 1. See ZNALAB

Name	Hex. Offset	Details
ZTXTAB	54	Description Converts text reference to absolute address Parameters Passed PAR1 byte 0 X'80' if status of block to remain unchanged not X'80' - text block set to busy 1-3 text reference to be converted Parameters Returned PAR1 byte 0 unused 1-3 absolute address corresponding to text reference
ZTXTRF	50	Description Converts absolute address to text reference Parameters Passed PAR1 byte 0 unused 1 block number of text block containing absolute address 2-3 unused PAR2 byte 0 unused 1-3 address to be converted Parameters Returned PAR1 byte 0 unused 1-3 text reference corresponding to absolute address Notes 1. This routine is of use in only a few cases since it requires to be passed the block number containing the absolute address, and only returns the offset from the start of the block. This offset can be calculated, if the text block is scanned sequentially, by subtracting the address of the start of the block
ZUBW	78	Description Writes on backing storage Parameters Passed PAR1 byte 0 unused 1-3 address of output record PAR2 bytes 0-1 unused 2-3 length of record (binary) Parameters Returned None

Name	Hex. Offset	Details
ZUERR	30	Description Inserts diagnostic messages in dictionary Parameters Passed PAR5 bytes 0-1 unused 2-3 numeric parameter, if any (halfword binary) PAR6 byte 0 unused 1-2 message number (hexadecimal) 3 bit 0 on if text to be inserted 1 on if statement number to be inserted 2 on if numeric parameter to be inserted 3 on if dictionary reference to be inserted 4-7 severity code of message X'0' Termination X'4' Severe X'8' Error X'C' Warning PAR7 either: byte 0 unused 1-3 address of text to be inserted or: byte 0-1 unused 2-3 dictionary reference to be inserted PAR8 bytes 0-1 unused 2-3 length of text to be inserted Parameters Returned None Notes 1. When the message is printed the numeric parameter is converted to decimal and inserted into the message. PAR5 is unused if bit 2 of byte 3 in PAR6 is off 2. If bit 1 is on, the statement number is taken from the ZSTAT slot in the communications region at the time ZUERR is called 3. Bits 0 and 3 are mutually exclusive and if both are on in a call to ZUERR, the routine aborts 4. If bit 3 is on, the dictionary reference from PAR7 is inserted into the message dictionary entry. The error message phases pick up the BCD from the dictionary entry, indicated by the reference, and insert it into the message 5. If bit 0 is on, text is picked up from the address given in PAR7. This text is in compiler internal representation. The length of the text is taken from PAR8. The maximum length of text inserted into a message is 10 characters. If the length given is greater than 10 the text is truncated to 10 characters. If the text has been truncated it is enclosed in quotes in the message

Name	Hex. Offset	Details
ZUGC	10	Description Gets scratch storage Parameters Passed PAR1 bytes 0-3 count of 512 byte blocks of storage required Parameters Returned PAR1 byte 0 unused 1-3 address of allocated scratch storage PAR2 bytes 0-1 unused 2-3 bytes of storage allocated
ZULF	70	Description Writes record to object module file (SYSLIN) Parameters Passed PAR1 byte 0 unused 1-3 address of 72 byte area containing record to be written Parameters Returned None Notes 1. If an uncorrectable I/O error occurs on this data set the option LOAD is switched off, a message is produced, and the compilation continues without producing an object module 2. The last 8 bytes of the record will contain: bytes 73-76 name of object module, taken from ZPRNAM in the communications region. This is set from the first four characters of the first entry label of the external procedure 77-80 sequence number

Name	Hex. Offset	Details
ZUPL	08	Description Puts record out to SYSPRINT Data Set Parameters Passed PAR1 byte 0 unused 1-3 address of area defining print line PAR3 bytes 0-3 zero if no secondary heading to be printed or address of area defining secondary heading line Parameters Returned None Notes 1. Paging action is performed automatically 2. Format of area containing print line is: byte 0 x'00' 1 total length of area (binary) 2 ASA control character 3 line to be printed-EBCDIC, variable length, maximum 132 characters
ZURC	18	Description Releases scratch storage got by ZUGC Parameters Passed PAR1 bytes 0-3 count of entries to ZUGC to be released (binary) Parameters Returned None Note The routine frees all the storage that was allocated by the last n calls to ZUGC, where n is given by PAR1
ZURD	0C	Description Reads record from SYSIN Parameters Passed PAR1 byte 0 unused 1-3 address of area into which record is to be placed Parameters Returned PAR2 bytes 0-1 unused 2-3 length of record returned (binary)

Name	Hex. Offset	Details
ZUSP	74	Description Puts record out to SYSPUNCH Parameters Passed PAR1 byte 0 unused 1-3 address of 72 byte area containing record to be written Parameters Returned None Notes 1. The relevant option is PUNCH. See ZULF for other notes
ZUTXTC	14	Description Gets new text block and optionally chains it to a current block Parameters Passed PAR1 byte 0 unused 1-3 text reference to a current block if new one is to be chained PAR2 bytes 0-2 unused 3 X'00' no chaining or X'8n' chaining where n is status required for current block Parameters Returned PAR1 byte 0 unused 1-3 text reference to new block PAR2 byte 0 unused 1-3 absolute address of start of new block Notes 1. The new block is set to a status of 'busy' 2. See ZALTER for definition of status of blocks

Indexes to program logic manuals are consolidated in the publication IBM System/360 Operating System: Program Logic Manual Master Index, Form Y28-6717. For additional information about any subject listed below, refer to other publications listed for the same subject in the Master Index.

abbreviations used during compilation 439-448
abnormal termination 23
absolute addresses, conversion 15
absolute code, instruction formats 433-434
accumulator register 64
additions to text 40
adjustable bounds 34
ADV (see array dope vector)
aggregate length table 65
aggregates logical phase 46
aggregates, RDV for CONTROLLED or BASED 57
aliasing, of variables 47
alignment, by structure processor 46
ALLOCATE chain 29
annotated dictionary dump 25
annotated text dump 25
AREA 25
argument markers 52
arithmetic registers 51
array bounds 32
array dope vector (ADV) 39
array multipliers, calculated in structure processor 46
arrays
  of string dope vectors 46
  of strings, calculations with VARYING attribute 46
assigned registers 67
ASSIGNMENT triples 59
ATR option 39
attribute collection area 35
  scanned for SETS 37
attribute list, scanned 34
attributes
  consistency 29
  consistency analyzed 31
  dictionary entries 28
  inconsistent 34
  invalid 34
  syntax checking in read-in phase 31
  test for consistency 32
  when printed 40
AUTOMATIC chain 38
  housekeeping 39
  in structure processor 46
  scan in pseudo-code phase 51
  VDA 63
auxiliary storage 17
  spilling 15

base registers 67
based variable expression (BVEXP) 39
BASED variables, RDV 57
batch compilation 26
BCD, translation 26
BEGIN statements, count 29
BLDL 26
BLDL macro 23
  phase directory construction 386
block control 21
block control area 22
block header chains 33
block nesting levels 30
block size
  determination of 15
  dictionary 15
  selection 22
  SIZE option 22
  text 15
bound slot 39
boundary alignment, by structure processor 46
build list 23
  phase directory construction 386
built-in function handler 28
built-in functions
  EMPTY 42
  generic 33
  non-generic 33
  NULL 42
  NULLO 42
  scan for 54
  TRANSLATE 52,277
  VERIFY 53,277
BUY ASSIGN statements, scan in pseudo-code phase 59
BUY statement 42
  scan in pseudo-code phase 59
BUY triples, in pseudo-code phase 55
BVEXP (see based variable expression)
BXH instruction, used to generate pseudo-code 47
BXLE instruction, used to generate pseudo-code 47
BY NAME option, in pretranslator phase 40

CALL chain 29
calling program 21
cards, control 26.1,86
catalogued procedures 15
CCCODE 26
chains 26
  ALLOCATE 29
  AUTOMATIC 38-39
    housekeeping 39
    in structure processor 46
    scan in pseudo-code phase 51
    VDA region 63
  block header 33
  CALL 29
  circular 33
  COBOL, in preprocessor 46
  constants 38,60-61
  constructed by read-in 29
  CONTROLLED 39

in structure processor 46
DECLARE statements 29,35
DEFINED scan 47
error 69
hash 33
picture 34
validity check 38
PROCEDURE-ENTRY BEGIN 29
STATIC 39,61
in structure processor 46
scan of external section 68
SUBS TABLE 49
symbol variables 62
type 1 entry 68
chamelon dummy argument 45
chamelon temporaries 41-42
character translation 21
CHAR48 option 24
check, syntax 26.1,161
CHECK lists, formal parameters 38
circular chains
extended 34
initialized 33
cleanup phase 27
CLOSE statements, parameter list 57
closing routine 26
CNVC macro 60
COBOL chain, mapped in preprocessor phase 46
COBOL option, in ENVIRONMENT string 41
code byte
for TASK option 41
GOOB 37
GOTO 37
statement introduction 37
text string 17
code
for prologues and epilogues 460-465
library call 46
compiler completion 23
dictionary 26
comments, removed from input text 29
common data space 48
commoning of subscripts 48-49
communication between phases 17,21
communication with control program 15
communications region
contents 17
Control Code word 17
dictionary block 17
initialization 21
of dictionary 17
options 17
tables 451-457
use 21
ZPRNAM 67
compare action 44
compare weight 44
compilation
as a job step 15
bypassed 28
termination 70
compile-time processor 15
communications region 479-482
constants 30
control interfaces 482
identifiers 30
internal formats of text 474-478
logical phase 27
operators 30
output string 30
SOURCE option 23
compiler control 21-26.1
compiler control modules 21,24-26.1
compiler control phases, tables 75-86
compiler control routines 15
compiler functions, scan in pseudo-code phase 59
compiler logic, guide to 71
compiler organization and control diagram 20
compiler read routine 28
compiler
as part of operating system 15
completion code 23
functions 32
initialization 21
invocation by calling program 21
output data sets 15
phases 15
pseudo variables 32
purpose 15
storage requirements 15
completion code 23
concatenation, in 48 character set 27
consistency of attributes 29
consistency of options 29
constant chain 60-61
constants pool 60
constants
chain 38
contextual use 31
conversion to binary 37
count 37
dictionary entries 28
in compile-time processor string 30
marker 37
contextual
constants 31
identifiers 31
pictures 31
control
diagram 20
of dictionary block 21
of text block 21
control cards 26.1,86
control blocks
DECLARE 41
OPEN 41
Control Code word 17,26
control module 21,24
control of workspace 15
control program 15
control routines 28
compiler 15
debugging 15
diagnostic messages 23
entry 21
initialization 15
input/output 15
input/output 23
program interruptions 15
storage allocation 15
storage dumping 15
table Of 488-501
ZUBW 27

ZURD 27
control tables 86
control variables in pseudo-code phase 52
CONTROLLED chain
scan 39
in structure processor 46

CONTROLLED variables, RDV 57
CONV macro 60
CONV pseudo-code macro 59
conversion
  absolute addresses 15
  constants to internal form 60
  input characters 28
  symbolic references 15
  of built-in functions 42
  of character codes 30
  of constants 37
  of precision data 34
  of replication factors 52
  to EBCDIC 28
  to internal code 28
  to triples 44
  48 to 60 character symbols 26.1
CONVERT pseudo-code macro 60
correction of syntactical errors 29
correspondence defining 47
count stack 37
count, of constants 37

Data Element Descriptor (DED) 37
  for symbol variables 62
data flow diagram 16
data sets
  compiler output 15
  data flow diagram 16
  INCLUDE 27
  input/output 15
  input/output usage table 24
  interface with compiler phases 23
  opening 21
  SYSIN 15
  SYSLIN 15
  SYSPRINT 15
  SYSPUNCH 15
  SYSUT1 15
  SYSUT3 15
  TRACEOUT 26
DD statement 15
debugging
  control routines 15
  features 26
DECLARE chain 29
DECLARE control block 41
DED (see Data Element Descriptor)
default rules, in dictionary entries 34
DEFINED chain check 46
DEFINED chain, scan 47
DEFINED data 39
DEFINED items, in aggregates phase 47
defined references 39
defined slot 36,39
defining
  dynamic 39
  static 39
  validity of 39
detection of syntactical errors 29
diagnostic message chain 30
diagnostic messages 15
  allocation to phases 466-473
  parameters in dictionary chain 30
diagnostics
  for invalid characters 28
  syntax errors 28

dictionary
  accessing 31
  annotated dump 25
  areas 31
  BCD entries 26
  codes 26
  communications region 17
  constant chain 60
  constructing 31
  default rules 34
  diagnostic message chain 30
  diagnostic messages 23
  dump 26
  embryo entry 29
  extended 26
  hash table 31
  identifiers 31
  normal extended 21
  normal size 26
  organization 17
  resident table 384
  search 31
dictionary block
  as communications region 17
  control 21
  release 28
  size 15
  space allocation 21
dictionary entries
  attributes 28
  AUTOMATIC chain 38
  code bytes 387
  constants 28
  copy made 36
  data byte 38
  defined data 39
  definition of types 32
  diagram for internal entry point 33
  dimension table 412
  dope vector descriptor 47
  dummy reference 35
  entry points 32
  expanded 39
  for file conditions 38
  for file constants 41
  for ON conditions 37
  for STATIC DSAs 61
  format 17
  formats
    AUTOMATIC chain delimiter 409
    BCD entries 407
    built-in-functions 406-407
    CHECK list 408
    code bytes 397-400
    compiler labels 404
    constants 405-406
    data items 395-396
    DED 410
    DED2 410
    dope vector skeletons 409
    dope vectors for temporaries 410-411
    DVD 411
    ENTRY code byte 393-394
    entry points 389-393
    entry type 1 389-391
    emtry type 2 391
    entry type 3 391-392
    entry type 4 392-393

entry type 5 393
error message 411-412
EVENT data 406
FED (Format Element Descriptor) 410
files 405
formal parameters 404
GENERIC entry 393
internal library functions 407
label BCD entries 410
label constants 404
label variables 394-395
ON condition 408
ON statements 407-408
optimization code byte 394
options code byte 394
parameter descriptions 407
parameter lists 409
pictures 408-409
RDV 411
second code byte 407
SETS list 392
STATIC DSA 411
structure entries 396
symbol table entries 409
task identifiers 406
variable information 400-401
wprkspace requirements 409
GENERIC 42
INITIAL value list 413
INITIAL values 412-413
internal formats 387-413
iterative DO-loops 28
labels 30
LIKE referemce 36
optimization 34
options code byte 34
picture table 34
pictures 38-39
RDV and DVD 62
record dope vector 47
REVERT statements 38
SIGNAL statements 38
skeleton dope vector 61
statement labels 29
symbol table 62
dictionary logical phase 31
dimensions, inherited 38
DISPLAY statements, parameter list 56
DO group stack 52
DO MAP
chain 48
table 48
DO statements, count 29
DO-loop control optimization 50
dope vector descriptor, dictionary entry 47,62
'dope vector required' bit 39
dope vector, virtual origin slot 46
DROP item in pseudo code 51
DSA (see Dynamic Storage Area)
DSLOTS 22
DTSP 25
DTSPC 25
dummy arguments
chamelons 45
when created 45
dummy dictionary reference 35
dummy reference, in second file 38
dummy references, in text 37
DUMP option, effect on SIZE option 25
dump
of dictionary 26
on SYSPRINT 25
DUMP
option 25
parameter 25
dumping, inter-phase 25
DVD (see dope vector descriptor) 62
dynamic defining 39
dynamic dump 25
Dynamic Storage Area (DSA) 51
optimization 64,464-465
tasking information 63

EMPTY built-in function 42
END card 69
END statements
count 29
inserted 29
end-of-file indication 29
end-of-program indication 29
count 30
end-of-program marker, in pseudo-code phase 54
entry labels, in source text 29
entry point, formal parameter 36
entry points, dictionary entries 32
entry type 1 68
ENVIRONMENT option, for file constants 41
ENVIRONMENT string, with COBOL option 41
environmental options, use of 15
EOB (end of block)
EOB operator 44
epilogue code, examples 460-465
erroneous references, replaced in text 37
error chains 69
ERROR condition 29
error dictionary entries 69
Error Editor 30
error editor logical phase 69
error message text 70
error messages
classification 23
order of severity 28
phase directory 23
text 28
errors and diagnostic messages 29
errors, detected in read-in phase 31
ESD (see External Symbol Dictionary)
EXCLUSIVE second level marker 41
EXEC STATEMENT 15
explicitly generated statements, in pretranslator phase 40
expression, definition 42
expressions
array bounds 32
initial value iteration factors 32
string lengths 32
structure 43
extended dictionary 21,26
external library routines 439
External Symbol Dictionary
ESD cards 67
in data flow diagram 16

factored attribute table 34
factored attributes 34
file conditions, dictionary entries 38
final assembly logical phase 67
First Level Directory, format 385
flow trace, not carried out by compiler 67
FLOW/TRACE facilities 26.1
flow/trace markers 86,86.1
flowcharts (see also Phases and Modules)
  organization 71
  overall compiler logic 72-73
  resident control phase 74
formal parameter list 39
formal parameters, in CHECK or NOCHECK lists 38
formats of dictionary entries 387-413
freed registers 67
FREEDSA 55
function calls 42
function references 41
functions 32

generic built-in functions 33
GENERIC entry label 42
generic phase 43
GET statements, library call 58
GLOBAL region boundary 49

halfword binary items 65
hash chain, used to scan dictionary 37
hash chains 33
hash table 33
  address 31
  deleted 32
  in dictionary 31
housekeeping 38

identifiers
  contextual use 31
  implicit definition 31
  in compile-time processor output string 30
  in dictionary logical phase 31
  in multiple declarations 35
  when rejected 35
IDV (see Initial Dope Vector)
IEMAA 21
IEMAF control section 458
IEMKTAB macro 485
IEMKTCA macro 483-484
IF statements, count 29
IHELSP 56
IHEMAIN 69
IHEQERR 68
IHEQTIC 68
IHESADA 68
IHESADB 68
IHESTGA 54
IHESTGB 54
in-line pseudo code 52-53
INCLUDE data set 27
inherited dimensions 38
INITIAL attribute, second file entries 36
Initial Dope Vector, scan for statements 51
initial labels
  in pseudo-assignment statements 30
  subscripted label variables 30
initialization
  of compiler 21
  of control routines 15
input, original 27
input text 17
  end-of-file indication 29
input/output
  control routines 15
  control routines 23
  data set usage table 24
  data sets 15
  library call for RECORD I/O 56
insertion file 66-67
insignificant blanks, removed fron input text 29
inter-phase dumping 25
interface
  with data sets 23
  with operating system 15
intermediate file 24
internal code 29
  in text string 17
internal entry point, diagram 33
internal formats of dictionary entries 387-413
Internal Formats of Text 414-448
internal library routines 438-439
interruptions, control routines 15
invalid attributes, check for 34
invalid characters
  diagnostics 28
  replaced by blanks 27
  used as markers 28
invalid pictures 38
invariance of subscripts 48-49
IRREDUCIBLE 36
iSUB references 40
iSUBS 43
ITDO region boundary 49
iteration factors, initial value 32
iterative DO-loops, dictionary entries 28

Job Control Language 15
JOB statement 15
job step 15
job termination 23

K phases, table handling routines 483-487
KEYID routine 384
KEYWD routine 384
Keyword tables
  construction 384
  in read-in logical phase 30

label table 29
labels, inserted in dictionary 30
level stack 37
library call sequences
  for not in-line CHAR and BIT string 59
  for stroage triples 59
library call
  data transmission 58

GET and PUT statements 58
initialization 58
RECORD-oriented I/O 56
termination 58
library calling sequences 438
library conversion routines 68
library error package 66
library routines
external 439
FREEDSA 55
IHELSP 56
IHEQERR 68
IHEQTIC 68
IHESADA 68
IHESADB 68
IHESTGA 54
IHESTGB 54
internal 438-439
library work store (LWS) 63
Library, call code 46
LIKE attribute 36
LIKE chain 36
line numbering 27
Link Library 15
Linkage Editor 15
Linkage Loader 15
lists
SUBS/REGION 48
USE 48
load-ahead technique 35
loader text, TXT cards 68
location counter, for assembled code 68
logical phases, table 18-19
LWS (see library work store) 63

machine instructions, in text string 17
MACRO option 24,27
macro-code interpreter 28
main storage
release of 26
requirements 22
Map, Phase-in-Storage 383
marker byte function references 41
markers (see also second level markers) 41
argument 52
constant 37
end-of-program 54
function call 42
multiple assignment 54
P format 37
procedure calls 42
pseudo-variable 54
'unsafe' 48
use of invalid characters 28
wanted or not wanted 44
match chain, in SUBS TABLE 49
message directory block 28
messages (see also diagnostic messages, error messages)
classification 23
control routines 23
diagnostic 15
dictionary chain 23
misaligned argument 65
misaligned operands 65
mixed overlay defining 47
modules (see also Phases and Modules)
compiler control 24-26.1
IEMAA 21
MTF (multiplier function)
MTF statement 39
multiple assignment markers 54
MULTIPLE ASSIGNMENT triples 59
multiple declarations 35

NAME card 69
nested procedures, unnested at object time 68
nesting, patch code 48
NOCHECK lists, formal parameters 38
'not sold' temporaries 42
null arguments, in parameter lists 57-58
NULL built-in function 42
NULLO built-in function 42

object program 17
OBJNM parameter 69
OFFSET slots 403-404
OFFSET 2 slot, diagram 402
offset, calculation in structure processor 46
ON conditions, dictionary entries 37
ON statements, count 29
OPEN control block 41
OPEN statements, parameter list 57
opening of data sets 21
operators, in compile-time processor output string 30
optimization byte 34
optimization logical phase 47
storage blocks 22
optimization
of DSA 64
subscripts 48-49
option list, printing 21
options code byte 34
options list, initial scan 21
options
ATR 39
BY NAME 40
check for legal combinations 58
consistency 29
Control Code word 17
control section 25
environmental 15
in communications region 17
in data flow diagram 16
instructions to compiler 15
interpretation of 15
MACRO 27
scanned 34
source program 15
status byte 15
stored in dictionary 17
TRACE/PATCH 26
XREF 39
ORDER, default setting 47
organization, diagram 20
original input 27
output string
from compile-time processor 30
in read-in phase 29
output, of read-in phase 29

overlay defining 47
mixed 47
scalars 47
undimensioned structures 47

padding, calculation in structure processor 46
parameter description, in entry declaration 42
parameter list
DISPLAY statements 56
for library call initialization 58
for OPEN and CLOSE statements 57
library calls 56
null arguments 57
WAIT statements 56
parameter matching 32
parameter registers 51
parameters, of diagnostic messages 30
PARTIAL SAFE/UNSAFE boundaries 49
patch code
in nest of loops 48
in optimization phase 48
PATCH/TRACE option 26
patch file 47
PATCH facilities 26.1
PEXP (see pointer expression)
PEXP statement 36
deleted 39
phase deleting 23
phase directory 384
construction 23
error messages 23
format 386
status byte 15
phase loading 23
phase marking 23
Phase-in-Storage Map 383
phase, wanted/not wanted 23,35,44
Phases and Modules - Guide 379-382
Phases and Modules - Descriptions, Flowcharts, and Subroutine Tables
AA 21,74,75-77
AB 21,74,78-79
AC 24,74,79
AD 25,74,79
AE 25,74,80
AF 25,74,80
AG 25,74,80
AH 26,74
AI 26,74
AJ 26,74
AK 26,74,80
AL 26,74,81-85
AM 26,74,86
AN 26,81-85
AS 27,88,94-95
AT 26,74.1,86,86.1
AV 27,89,96
BC 27-28,90,97-98
BE 27
BF 27
BG 28,91,100-101
BI 28
BJ 28
BM 28,92,102
BN 28
BO 28
BP through BV 28
BW 28,93
BX 26,105,111
CA 30,112
CC 30,113
CE 30,113
CG 30
CI 30-31,106,114
CK 30
CL 30,107,115
CM 30
CN 30
CO 30-31,108,116
CP 30
CR 30
CS 30-31,109,117
CT 30
CV 30-31,110,118
CW 30
ED 33,135
EF 33
EG 33-34,120,135
EH 34
EI 34,121,137-138
EJ 34
EK 35
EL 35,122,140-141
EM 35
EP 35-36,123,143-144
EV 36
EW 36,124,145
EY 36,125,146
F1 26.1,161
FA 36-37,126,147-148
FE 37,127,149-150
FI 37,128,150-151
FK 37,129,152
FO 37-38,130,153
FQ 38,131,154-155
FT 38-39,132,156-157
FV 39,133,158-159
FX 39-40,134,160-161
GA 41,163,171
GB 41-42,164,172-173
GC 41
GK 41,165,174
GO 42,175
GP 42,166,176-177
GU 43,167,179-180
HF 43,168,181-182
HK 43,169,183
HP 43,170,184
IA 44,186,194
IG 45,187,195
IK 45,188,196
IL 45,189,196
IM 45,190,196-197
IT 45,191,198-199
IX 45-46,192,199
JD 46,193,200
JI 46,202,205
JK 46-47,203,206-207
JP 47,204,208
JZ 26.1,74,208
KA 48,210,220
KB 48
KC 48,212,221

KE 48,213,221-222
KG 48-49,214,222
KJ 49,215,223
KN 49,216,224
KO 49-50,217,225-231
KP 49
KQ 49
KT 50,218,232-233
KU 50,219,234-236
KV 50
LB 51,238,268
LD 52,239,269
LG 52,240,270-271
LR 52
LS 52-53,241,272-273
LV 53,242,274
LW 53
LX 53,243,275-276
LY 53
MA 53-54,244,277-278
MB 54,245,279-280
MD 54,246,281
ME 54,247,282
MG 54,248,284
MI 54,249,287
MK 55,250,288
ML 55,251,289
MM 55,252,289-290
MP 55,253,291
MS 55,254,292-293
NA 55-56,255,294-295
NG 56,256,297
NJ 56-57,257,298-302
NM 57-58,258,304
NT 58,259,305
NU 58,260,306
OB 59,261,307-309
OD 59,262,310
OE 59-60,263,311
OG 60,264,312-313
OL 60
OM 60,265,314
OP 60,266,315
OS 60,267,316
PA 61,319,329
PD 61,320,330
PH 61-62,321,331-332
PL 62,322,333
PO 62
PP 62-63,323,334-335
PT 63,324,336-337
QF 63-64,325,338-339
QJ 64,326,340-341
QU 65,327,342-343
QX 65,328,344
RA 66,346,349-350
RB 66
RC 66
RD 66,347,351-352
RF 67,348,353
RG 67
RH 67
TF 67,356,365
TJ 67,357,366
TO 67-68,358,367
TQ 67-68
TT 68,359,368-369
UA 68-69,360,370-371
UD 69,361,372
UE 69,362,373-374
UF 69,363,375-376
UH 69
UI 69
XA 69,364,378
XB 69
XC 69
XF 69
XG through YY 69-70
phases
branch after execution 17
communication between 17
control between 17
logical 17
Aggregates 18,46-47,201
Compile-time Processor 18,27-28,87
Dictionary 18,31-40,119
Error Editor 19,69,364
Final Assembly 19,67-69,355
Optimization 18,47-50,209
Pretranslator 18,40-43,162
Pseudo-code 18,50-60,237
Read-In 18,28-31,104
Register Allocation 19,66-67,345
Storage Allocation 19,60-65,318
Translator 18,43-46,185
organization 17
physical 17
table 18-19
physical registers, use 51
picture
chain 34,38
contextual use 31
dictionary entry 34,39
marker 37
table 34
pointer expression (PEXP) 39
POINTER, in pointer expression 39
prefix form 44
preprocessor 46
in aggregates phase 46
48-character set 26.1
pretranslator logical phase, control passed to 40
procedure calls 42
PROCEDURE statements, count 29
PROCEDURE-ENTRY-BEGIN chain 29
processing program 15
program check handling 23
prologue 61
contruction 63
prologue code 64
examples 460-465
prologue time 38
pseudo-code logical phase 50
pseudo-code
definition 50
design 50,429-432
DROP item 51
generation using BXH and BXLE instructions 47
in-line 52-53
skeletions 58
temporary descriptions 438
pseudo-variable markers 54
pseudo-variables 32
scan in pseudo-code phase 59

correction 29
detection 29
in read-in phase 29
SYSIN 15
opening 21
SYSLIN 15
SYSPRINT 15
dump 25
opening 21
SYSPUNCH 15
opening 21
system generation, tables 458-459
SYSUT1 15
SYSUT3 15
closed for output 25
control 24
open for input 25
opening 21
ZURD routine 25

table control area 483
table control block area 48
table of logical phases 18-19
tables and routine directories, introduction 71
TASK option, code bytes 41
tasking information in DSA 63
TCA (see table control area)
TDPSCIE 25
temporary description stack 436-437
temporary descriptors 51
Temporary Result Descriptor Triples (TMPD) 51,436
temporary workspace 51
termination error messages 23
termination of compilation 70
termination, of statements 30
terms used during compilation 439-448
testing, for consistency of attributes 32
text additions
BUY statements 40
I/O statements 40
SELL statements 40
statements within statements 40
temporary storage 40
unbrella symbol 40
text blocks
chaining 22
control 21
markers 28
release 28
size 15
space allocation 21
spilled 17
symbolic name 17
text chain 39-40
text code bytes 17
first level table 415-416
is pseudo-code 429
on entry to translator phases 424-425
second level table 417-418
text formats
absolute code 433-434
after read-in phase 418-423
in pseudo-code 429
internal 414
triples 426-428
text scratch storage 39-40
text string processing 17
text, annotated dump 25
text, of error messages 28
Third Level Tables 385
TMPD (see Temporary Result Descriptor Triples)
transfer vector 27
to control routines 21
transformation subscripts 48-49
translation table 29
translator logical phase
generic phase 43
stacker phase 43
triple names (see Appendix D.11)
triples
ASSIGNMENT 59
format 44
MULTIPLE ASSIGNMENT 59
PTCH 47
SPECIAL ASSIGNMENT 59
when generated 44
TSLOTS 22
TXT (see loader text)
type 1 entry 68
types of dictionary entries 32

unary profixed triples 46
undefines formal parameter 36
undimensioned structure overlay defining 47
'unsafe' variables 48
USE list 48
USSL declaration 50

validity check, PICTURE chain 38
value scan 28
Variable Data Area
in AUTOMATIC chain 63
in pseudo-code phase 55
variable storage accumlator 64
variables
aliasing 47
RDV for CONTROLLED or BASED 57
symbol table 62
VDA (see Variable Data Area)
virtual origin slot of dope vector 46

WAIT statements, parameter list 56
warning messages 23
weights, compare 44
weights, stack 44
work data sets (see data sets)

XREF option 39

ZCOMM 479
ZPRNAM 67
ZUBW 27
ZURD 27
ZURD routine 25

48-character set 15
concatenation 27
48-character set preprocessor 26
input 27
output 27
48-character syntax 26

STATIC DSA 61
status byte 15
status indications 23,386
status slot
  dictioary block 22
  text block 22
storage
  attribute collection area 35
  auxiliary 17
  program too large 21
  spilled 17
  spilling 15
storage allocation logical phase 60
storage allocation table 450
storage allocation, control routines 15
storage blocks
  availability 22
  span of complete statement 30
storage dumping, control routines 15
storage requirements 15,449-450
storage size, as an argument 15
string lengths 32
structure assignment statements 43
structure expressions 43
structure level numbers 34
structure processor, in aggregates phase 46
SUBS/REGION list 48
SUBS table 49
subscript optimization
  commoning 48-49
  invariance 48-49
  transformation 48-49
substitutions, in source text 29
symbol table dictionary entry 62
symbol variables, DED
symbolic accumulator register 46
symbolic name, text blocks 17
symbolic references, conversion 15
symbolic register counter 51
symbolic registers 67
syntactical errors
syntax check 26.1,161
  correction 29
  detection 29
  in read-in phase 29
SYSIN 15
  opening 21
SYSLIN 15
SYSPRINT 15
  dump 25
  opening 21
SYSPUNCH 15
  opening 21
system generation, tables 458-459
SYSUT1 15
SYSUT3 15
  closed for output 25
  control 24
  open for input 25
  opening 21
  ZURD routine 25

table control area 483
table control block area 48
table of logical phases 18-19
tables, control 86
tables and routine directories, introduction 71
TASK option, code bytes 41
tasking information in DSA 63
TCA (see table control area)
TDPSCIE 25
temporary description stack 436-437
temporary descriptors 51
Temporary Result Descriptor Triples (TMPD) 51,436
temporary workspace 51
termination error messages 23
termination of compilation 70
termination, of statements 30
terms used during compilation 439-448
testing, for consistency of attributes 32
text additions
  BUY statements 40
  I/O statements 40
  SELL statements 40
  statements within statements 40
  temporary storage 40
  unbrella symbol 40
text blocks
  chaining 22
  control 21
  markers 28
  release 28
  size 15
  space allocation 21
  spilled 17
  symbolic name 17
text chain 39-40
text code bytes 17
  first level table 415-416
  is pseudo-code 429
  on entry to translator phases 424-425
  second level table 417-418
text formats
  absolute code 433-434
  after read-in phase 418-423
  in pseudo-code 429
  internal 414
  triples 426-428
text scratch storage 39-40
text string processing 17
text, annotated dump 25
text, of error messages 28
Third Level Tables 385
TMPD (see Temporary Result Descriptor Triples)
TRACEOUT data set 26
TRACE/FLOW facilities 26.1
trace/flow markers 86,86.1
TRACE/PATCH option 26
trace routine 86.1
transfer vector 27
  to control routines 21
transformation subscripts 48-49
TRANSLATE built-in function 52,277
translation table 29
translator logical phase
  generic phase 43
  stacker phase 43
triple names (see Appendix D.11)
triples
  ASSIGNMENT 59
  format 44

MULTIPLE ASSIGNMENT 59
PTCH 47
SPECIAL ASSIGNMENT 59
when generated 44
TSLOTS 22
TXT (see loader text)
type 1 entry 68
types of dictionary entries 32

unary prefixed triples 46
undefined formal parameter 36
undimensioned structure overlay
defining 47
'unsafe' variables 48
USE list 48
USSL declaration 50

validity check, PICTURE chain 38
value scan 28
Variable Data Area
in AUTOMATIC chain 63
in pseudo-code phase 55
variable storage accumlator 64
variables
aliasing 47
RDV for CONTROLLED or BASED 57
symbol table 62
VDA (see Variable Data Area)
VERIFY built-in function 53,277
VERIFY instructions 26.1
virtual origin slot of dope vector 46

WAIT statements, parameter list 56
warning messages 23
weights, compare 44
weights, stack 44
work data sets (see data sets)

XREF option 39

ZCOMM 479
ZPRNAM 67
ZSTAT 26.1
ZUBW 27
ZURD 27
ZURD routine 25

48-character set 15
concatenation 27
48-character set preprocessor 26.1
input 27
output 27
48-character syntax 26.1

IBM

International Business Machines Corporation
Data Processing Division
1133 Westchester Avenue, White Plains, New York 10604
[U.S.A. only]

IBM World Trade Corporation
821 United Nations Plaza, New York, New York 10017
[International]