THIS DOCUMENT IS THE PROPERTY OF IBM. ITS USE IS AUTHORIZED ONLY FOR RESPONDING TO A REQUEST FOR QUOTATION OR FOR THE PERFORMANCE OF WORK FOR IBM. ALL QUESTIONS MUST BE REFERRED TO THE IBM PURCHASING DEPARTMENT.

LIB TYPE I LINE SET PLUG CHART NOTE [4] [5]

5997898 C

LINE SET TYPE	PRIORITY NOTE [3]	PARENT B/M AT EC		CARD/CABLE			PIN & LOCATION CHART	ALD PAGES	PARTITION 1 LINES #0/1		PARTITION 2 LINES #2/3		PARTITION 3 LINES #4/5		PARTITION 4 LINES #6/7		PARTITION 5 LINES #8/9 NOTE [2]		PARTITION 6 LINES A/B NOTE [2]		PARTITION 7 LINES C/D NOTE [2]		PARTITION 8 LINES E/F NOTE [2]	
		BM	EC	P/N	CODE	FUNCTION			BD X	1/O GT	BD X1	1/O GT	BD X1	1/O GT	BD X1	1/O GT	BD X1	1/O GT	BD X1	1/O GT	BD X1	1/O GT	BD X1	1/O GT	BD X1	1/O GT
ALL		5993343	309534	8218951	7583	BIT CLOCK		VA041	F2															
				8211455	7578	ISOLATION		VA031	G2															
				5362885	N885	NOTE [6]		VA081	A4															
HIGH SPEED CLOCK		1752939	321372	8254570	CF46	14.4/57.6 KHZ OSCILLATOR	VA015	VA070	G4															
1A EIA START STOP	50	5997348	321372	NOTE [7]	7581	LINE INTERFACE			B2	—	C2	—	D2	—	E2	—	H2	—	J2	—	K2	—	L2	—
				8218947	7580	DRIVER	VA003	VB020	M2	—	M4	—	N2	—	N4	—	P2	—	P4	—	Q2	—	Q4	—
				8211456	7579	LINE TERM			R2	—	R4	—	S2	—	S4	—	T2	—	T4	—	U2	—	U4	—
				5997936	—	TOP CARD CABLE			R2	R2	R4	R4	S2	S2	S4	S4	T2	T2	T4	T4	U2	U2	U4	U4
				5997936	—	TOP CARD CABLE			R3	R3	R5	R5	S3	S3	S5	S5	T3	T3	T5	T5	U3	U3	U5	U5
1B LOWSPEED LOWSPEED DUPLEX EXT MODEM	51	5997506	321372	NOTE [7]	7581	LINE INTERFACE			B2	—	C2	—	D2	—	E2	—	H2	—	J2	—	K2	—	L2	—
				8218947	7580	DRIVER	VA011	VB020	M2	—	M4	—	N2	—	N4	—	P2	—	P4	—	Q2	—	Q4	—
				8211456	7579	LINE TERM			R2	—	R4	—	S2	—	S4	—	T2	—	T4	—	U2	—	U4	—
				5997936	—	TOP CARD CABLE			R2	R2	R4	R4	S2	S2	S4	S4	T2	T2	T4	T4	U2	U2	U4	U4
				5997936	—	TOP CARD CABLE			R3	R3	R5	R5	S3	S3	S5	S5	T3	T3	T5	T5	U3	U3	U5	U5
1C EIA START STOP LOCAL	70	5997477	321372	NOTE [7]	7581	LINE INTERFACE			B2	—	C2	—	D2	—	E2	—	H2	—	J2	—	K2	—	L2	—
				8211450	7573	DRIVER	VA009	VB020	M2	—	M4	—	N2	—	N4	—	P2	—	P4	—	Q2	—	Q4	—
				8211456	7579	LINE TERM			R2	—	R4	—	S2	—	S4	—	T2	—	T4	—	U2	—	U4	—
				5997936	—	TOP CARD CABLE			R2	R2	R4	R4	S2	S2	S4	S4	T2	T2	T4	T4	U2	U2	U4	U4
				5997936	—	TOP CARD CABLE			R3	R3	R5	R5	S3	S3	S5	S5	T3	T3	T5	T5	U3	U3	U5	U5
1D EIA SYNC HDX EIA SS HDX EIA SS FDX EIA LOC ATT. SS EIA LOC ATT SYNC EIA SYNC FDX	20	5997351	321372	NOTE [8]	7575	LINE INTERFACE			B2	—	C2	—	D2	—	E2	—	H2	—	J2	—	K2	—	L2	—
				8211450	7573	DRIVER	VA004	VB060	M2	—	M4	—	N2	—	N4	—	P2	—	P4	—	Q2	—	Q4	—
				8211451	7574	LINE TERM			R2	—	R4	—	S2	—	S4	—	T2	—	T4	—	U2	—	U4	—
				5997936	—	TOP CARD CABLE			R2	R2	R4	R4	S2	S2	S4	S4	T2	T2	T4	T4	U2	U2	U4	U4
				5997936	—	TOP CARD CABLE			R3	R3	R5	R5	S3	S3	S5	S5	T3	T3	T5	T5	U3	U3	U5	U5
1E AUTO CALL	80	5997476	321372	5857434	6834	LINE INTERFACE	VA005	VB080	B2	—	C2	—	D2	—	E2	—	H2	—	J2	—	K2	—	L2	—
				8211450	7573	DRIVER			M2	—	M4	—	N2	—	N4	—	P2	—	P4	—	Q2	—	Q4	—
				8211451	7574	LINE TERM			R2	—	R4	—	S2	—	S4	—	T2	—	T4	—	U2	—	U4	—
				5997936	—	TOP CARD CABLE			R2	R2	R4	R4	S2	S2	S4	S4	T2	T2	T4	T4	U2	U2	U4	U4
				5997936	—	TOP CARD CABLE			R3	R3	R5	R5	S3	S3	S5	S5	T3	T3	T5	T5	U3	U3	U5	U5
1F EIA SYNC LOCAL ATTACH	40	5997478	321372	NOTE [8]	7575	LINE INTERFACE			B2	—	C2	—	D2	—	E2	—	H2	—	J2	—	K2	—	L2	—
				8211450	7573	DRIVER	VA010	VB060	M2	—	M4	—	N2	—	N4	—	P2	—	P4	—	Q2	—	Q4	—
				8211451	7574	LINE TERM			R2	—	R4	—	S2	—	S4	—	T2	—	T4	—	U2	—	U4	—
				5997936	—	TOP CARD CABLE			R2	R2	R4	R4	S2	S2	S4	S4	T2	T2	T4	T4	U2	U2	U4	U4
				5997936	—	TOP CARD CABLE			R3	R3	R5	R5	S3	S3	S5	S5	T3	T3	T5	T5	U3	U3	U5	U5
1G DIGITAL SYNC NOTE [1]	10	5997354	321372	8211483	7606	LINE INTERFACE			B2	—	C2	—	D2	—	E2	—	H2	—	J2	—	K2	—	L2	—
				8231680	7576	DRIVER	VA006	VB100	M2	—	M4	—	N2	—	N4	—	P2	—	P4	—	Q2	—	Q4	—
				8211454	7577	LINE TERM			R2	—	R4	—	S2	—	S4	—	T2	—	T4	—	U2	—	U4	—
				5997936	—	TOP CARD CABLE			R2	R2	R4	R4	S2	S2	S4	S4	T2	T2	T4	T4	U2	U2	U4	U4
				5997936	—	TOP CARD CABLE			R3	R3	R5	R5	S3	S3	S5	S5	T3	T3	T5	T5	U3	U3	U5	U5
1J EXTERNAL MIL STD 188C MODEM	12 *	1785972	321372	8231712	7608	LINE INTERFACE			B2	—	C2	—	D2	—	E2	—	H2	—	J2	—	K2	—	L2	—
				8214280	1817	DRIVER	VA007	VB121	M2	—	M4	—	N2	—	N4	—	P2	—	P4	—	Q2	—	Q4	—
				8214281	1818	LINE TERM			R2	—	R4	—	S2	—	S4	—	T2	—	T4	—	U2	—	U4	—
				5997936	—	TOP CARD CABLE			R2	R2	R4	R4	S2	S2	S4	S4	T2	T2	T4	T4	U2	U2	U4	U4
1K/1S X.35 INTERFACE	11 [1]	1785997	321372	8211486	7609	LINE INTERFACE			B2	—	C2	—	D2	—	E2	—	H2	—	J2	—	K2	—	L2	—
				8214282	1819	DRIVER	VA008	VB140	M2	—	M4	—	N2	—	N4	—	P2	—	P4	—	Q2	—	Q4	—
				8214283	1820	LINE TERM			R2	—	R4	—	S2	—	S4	—	T2	—	T4	—	U2	—	U4	—
				5997936	—	TOP CARD CABLE			R2	R2	R4	R4	S2	S2	S4	S4	T2	T2	T4	T4	U2	U2	U4	U4
1H DUPLEX MED SPEED	19	1851858	321372	NOTE [8]	7575	LINE INTERFACE			B2	—	C2	—	D2	—	E2	—	H2	—	J2	—	K2	—	L2	—
				8211450	7573	DRIVER	VA012	VB060	M2	—	M4	—	N2	—	N4	—	P2	—	P4	—	Q2	—	Q4	—
				8211451	7574	LINE TERM			R2	—	R4	—	S2	—	S4	—	T2	—	T4	—	U2	—	U4	—
				5997936	—	TOP CARD CABLE			R2	R2	R4	R4	S2	S2	S4	S4	T2	T2	T4	T4	U2	U2	U4	U4
				5997936	—	TOP CARD CABLE			R3	R3	R5	R5	S3	S3	S5	S5	T3	T3	T5	T5	U3	U3	U5	U5

PART NO 5997898 | LOGIC PG NO VA000

SHEET 1 OF 3

IBM

	NAME	DATE
DESIGN	WZ OCT71	
DETAIL	TS OCT79	
CHECK	DD JAN72	
APPRO	HB JAN72	

LIB TYPE I LINE SET PLUG CHART

SHT 1 OF 3

CLASSIFICATION: RED

MUST CONFORM TO ENG SPEC

SEE E/C HISTORY

CHANGE NO	DATE
321372	APR79
321755	OCT79
321871	JAN80
322670	SEP80
344292	NOV80

DEVELOPMENT NO

LOGIC PG NO VA000

5997898 C

THIS DOCUMENT IS THE PROPERTY OF IBM. ITS USE IS AUTHORIZED ONLY FOR IBM AND IBM AUTHORIZED PURPOSES. REPRODUCTION OR DISCLOSURE OF ITS CONTENTS IN WHOLE OR IN PART IS PROHIBITED WITHOUT THE PRIOR WRITTEN PERMISSION OF IBM. ALL QUESTIONS MUST BE REFERRED TO THE IBM PURCHASING DEPARTMENT

5997898 C

LIB TYPE 1 LINE SET PLUG CHART NOTE [4] [5]

LINE SET TYPE	PRIORITY NOTE [3]	PARENT B/M AT EC		CARD/CABLE			PIN & LOCATION CHART	ALD PAGES	PARTITION 1 LINES #0/1		PARTITION 2 LINES #2/3		PARTITION 3 LINES #4/5		PARTITION 4 LINES #6/7		PARTITION 5 LINES #8/9 NOTE [2]		PARTITION 6 LINES A/B NOTE [2]		PARTITION 7 LINES C/D NOTE [2]		PARTITION 8 LINES E/F NOTE [2]	
		BM	EC	P/N	CODE	FUNCTION			BD X	I/O GT	BD X1	I/O GT	BD X1	I/O GT	BD X1	I/O GT	BD X1	I/O GT	BD X1	I/O GT	BD X1	I/O GT	BD X1	I/O GT
1W HALF DUPLEX V.35 INTERFACE LOCAL ATTACH	9 [1] [9]	1752940	321372	8211486 8254569 8254568 5997936	7609 CF42 CF41 ——	LINE INTERFACE DRIVER LINE TERM TOP CARD CABLE	VA015		B2 — M2 — R2 — R2 R2		C2 — M4 — R4 — R4 R4		D2 — N2 — S2 — S2 S2		E2 — N4 — S4 — S4 S4		H2 — P2 — T2 — T2 T2		J2 — P4 — T4 — T4 T4		K2 — Q2 — U2 — U2 U2		L2 — Q4 — U4 — U4 U4	
1GA DIGITAL SYNC HIGH SPEED		1749332		8254620 8231680 8211454 5997936 5997936	CF77 7576 7577 —— ——	LINE INTERFACE DRIVER LINE TERM TOP CARD CABLE TOP CARD TABLE	VA006	VB160	B2 — M2 — R2 — R2 R2 R3 R3		C2 — M4 — R4 — R4 R4 R5 R5														
1N/1R X.21 INTERFACE MEDIUM SPEED	1N = 16 1R = 15	1N = 8549541 1R = 8549543	321371	8548956 8548832 8548722 5997936 5997936	CF56 CF24 CF25 —— ——	LINE INTERFACE CONTROL DRIVER/RECEIVER TOP CARD CABLE TOP CARD CABLE	VA017	VB200	B2 — M2 — R2 — R2 R2 R3 R3		C2 — M4 — R4 — R4 R4 R5 R5		D2 — N2 — S2 — S2 S2 S3 S3		E2 — N4 — S4 — S4 S4 S5 S5		H2 — P2 — T2 — T2 T2 T3 T3		J2 — P4 — T4 — T4 T4 T5 T5		K2 — Q2 — U2 — U2 U2 U3 U3		L2 — Q4 — U4 — U4 U4 U5 U5	
									PARTITION 1/2 LINES 0 & 2				PARTITION 3/4 LINES 4 & 6				PARTITION 5/6 LINES 8 & A				PARTITION 7/8 LINES C & E			
1N/1R X.21 INTERFACE HIGH SPEED	1N = 8 1R = 7 [1] [9]	1N = 8549541 1R = 8549543	321371	8548956 8548832 8548722 5997936 5997936	CF56 CF24 CF25 —— ——	LINE INTERFACE CONTROL DRIVER/RECEIVER TOP CARD CABLE TOP CARD CABLE	VA017	VB200	B2 — M2 — R2 — R2 R2 R3 R3	[10]			D2 — N2 — S2 — S2 S2 S3 S3	[10]			H2 — P2 — T2 — T2 T2 T3 T3	[10]			K2 — Q2 — U2 — U2 U2 U3 U3	[10]		
									PARTITION 1/2 LINE 0	LINE 2			PARTITION 3/4 LINE 4	LINE 6			PARTITION 5/6 LINE 8	LINE A			PARTITION 7/8 LINE C	LINE E		
1T DIGITAL DUPLEX	4 [1] [9]	1648397	321372	8211483 8231680 8211454 5997936 5997936	7606 7576 7577 —— ——	LINE INTERFACE DRIVER LINE TERM TOP CARD TABLE TOP CARD CABLE	VA013		B2 — M2 — R2 — R2 R2 R3 R3	C2 — — — — — — —			D2 — N2 — S2 — S2 S2 S3 S3	E2 — — — — — — —			H2 — P2 — T2 — T2 T2 T3 T3	J2 — — — — — — —			K2 — Q2 — U2 — U2 U2 U3 U3	L2 — — — — — — —		
1U DUPLEX V.35 INTERFACE	5 [1] [9]	1648398	321372	8211486 8214282 8214283 5997936 5997936	7609 1819 1820 —— ——	LINE INTERFACE DRIVER LINE TERM TOP CARD CABLE TOP CARD CABLE	VA014		B2 — M2 — R2 — R2 R2 — —	C2 — M4 — R4 — — — R4 R3			D2 — M2 — S2 — S2 S2 — —	E2 — M4 — S4 — — — S4 S3			H2 — P2 — T2 — T2 T2 — —	J2 — P4 — T4 — — — T4 T3			K2 — Q2 — U2 — U2 U2 — —	L2 — Q4 — U4 — — — U4 U3		
1Z FULL DUPLEX V.35 INTERFACE LOCAL ATTACH	6 [1] [9]	1752943	321372	8211486 8254569 8254568 5997936 5997936	7609 CF42 CF41 —— ——	LINE INTERFACE DRIVER LINE TERM TOP CARD CABLE TOP CARD CABLE	VA016		B2 — M2 — R2 — R2 R2 — —	C2 — M4 — R4 — — — R4 R3			D2 — N2 — S2 — S2 S2 — —	E2 — N4 — S4 — — — S4 S3			H2 — P2 — T2 — T2 T2 — —	J2 — P4 — T4 — — — T4 T3			K2 — Q2 — U2 — U2 U2 — —	L2 — Q4 — U4 — — — U4 U3		
1TA DIGITAL DUPLEX HIGH SPEED		1749331		8254620 8231680 8211454 5997936 5997936	CF77 7576 7577 —— ——	LINE INTERFACE DRIVER LINE TERM TOP CARD CABLE TOP CARD CABLE	VA013	VB160	B2 — M2 — R2 — R2 R2 R3 R3	C2 — — — — — — —																

SHEET 2 OF 3

5997898 VA000

NAME	DATE	CHANGE NO
DESIGN WZ	OCT71	
DETAIL TS	JAN80	
CHECK DD	JAN72	
APPRO HB	JAN72	

LIB TYPE 1 LINE SET PLUG CHART

SHT 2 OF 3

MUST CONFORM TO ENG SPEC

SEE E/C HISTORY				
RED	APR79	321372		
RED	OCT79	321755		
JAN80		321371		
DEVELOPMENT NO			SEP80	322670
LOGIC PG NO			NOV80	344292
VA000				

5997898 C

NOTES:

[1] WITH A CS2, DUE TO SCAN LIMITS SETS 1G,1K, HIGH SPEED 1N/1R, 1S,1T,1U,1W & 1Z MAY ONLY RESIDE IN LIB POSITION 1. IF LINE SPEED IS GREATER THAN 20 KBPS, LINE SETS 1G,1K,1N,1R,1S AND 1W IS FURTHER RESTRICTED AND MAY ONLY RESIDE IN PARTITIONS 1,2,3 OR 4 OF LIB POSITION 1; APPLICABLE TO BOTH FACTORY AND FIELD INSTALLATIONS. WITH A CS3 AND HIGH SPEED SELECT LINE SETS 1G,1K,1N,1S AND 1W MAY BE INSTALLED IN ALL PARTITIONS OF LIB POSITION 1.

[2] RESTRICTIONS DUE TO "ADDRESS SUBSTITUTION SPECIFY" CODES. APPLICABLE TO BOTH FACTORY AND FIELD INSTALLATIONS:
PARTITION #8 MUST NOT BE INSTALLED IF FEATURE B/M 5997463 IS SPECIFIED.
PARTITION #7 MUST NOT BE INSTALLED IF FEATURE B/M 5997464 IS SPECIFIED.
PARTITION #6 MUST NOT BE INSTALLED IF FEATURE B/M 5997465 IS SPECIFIED.
PARTITION #5 MUST NOT BE INSTALLED IF FEATURE B/M 5997466 IS SPECIFIED.

[3] WITH EXCEPTION OF LINE SET 1G,1T,1U,1W AND 1Z THESE PRIORITIES DO NOT APPLY ON FIELD INSTALLATIONS OF LINE SET FEATURES.

[4] LIB POSITIONS/LIB FEATURE BILL: 01X-A2-B/M 5993300/5993301
01X-A1-B/M 5993302
01X-B1-B/M 5993303
01X-B2-B/M 5993304/5993305
01X-B3-B/M 5993306
01X-B4-B/M 5993307

[5] LIB TYPE 1 USES X1 BOARD P/N 5997406.

[6] PLUG 5862885 CARD IN A4 ONLY IF THIS BOARD IS THE LAST BOARD ON EACH INTERFACE FROM THE COMMUNICATIONS SCANNER BOARD (CS). CS TYPE 1 HAS 1 INTERFACE AND CS TYPE 2 HAS 2 INTERFACES.

[7] THIS MAY BE CARD PN 8211458 OR 8238677.

[8] THIS MAY BE CARD PN 8211452, 8250115 OR 8250112.

[9] WITH A CS2, LINE SETS 1T,1U,1Z, AND HIGH SPEED 1N/1R, MUST RESIDE IN PARTITIONS 1 OR 3 IF THE LINE SPEED IS GREATER THAN 20 KBPS. WITH A CS3, LINE SETS 1N,1T,1U AND 1Z MAY BE INSTALLED IN PARTITIONS 1,3,5 OR 7 WITH HIGH SPEED SELECT AND OPERATING AT A SPEED GREATER THAN 20 KBPS.

[10] WHEN HIGH SPEED LINES ARE INSTALLED, THE ADJACENT ADDRESSES CANNOT BE USED. DO NOT PLUG ANY CARDS FOR THE ADJACENT EVEN POSITION. (EXAMPLE: WHEN PARTITION 1/2 IS INSTALLED, DO NOT PLUG CARDS IN LOCATIONS C2,M4 & R4).

* NOTE [1] APPLIES TO A 1J LINE SET WHEN OPERATING AT A SPEED GREATER THAN 20 KBPS.

"THIS DOCUMENT IS THE PROPERTY OF IBM. ITS USE IS AUTHORIZED ONLY FOR RESPONDING TO A REQUEST FOR QUOTATION OR FOR THE PERFORMANCE OF WORK FOR IBM. ALL QUESTIONS MUST BE REFERRED TO THE IBM PURCHASING DEPARTMENT.

IBM					DATE	CHANGE NO		DATE	CHANGE NO
NAME	LIB TYPE 1 LINE SET PLUG CHART				SEE E/C HISTORY			SEP80	322670
	(NOTES)				APR79	321372		NOV80	344292
DESIGN	WZ	OCT71	SHT 3 OF 3	RED	OCT79	321755			
DETAIL	TS	JAN80		RED	JAN80	321371			
CHECK	DD	JAN72	CLASSIFICATION	MUST CONFORM TO ENG SPEC		DEVELOPMENT NO		LOGIC PG NO	
APPRO	HB	JAN72						VA000	

5997899 C

LIB CABLE CHART SHOWN FACING CARD SIDE OF BOARDS

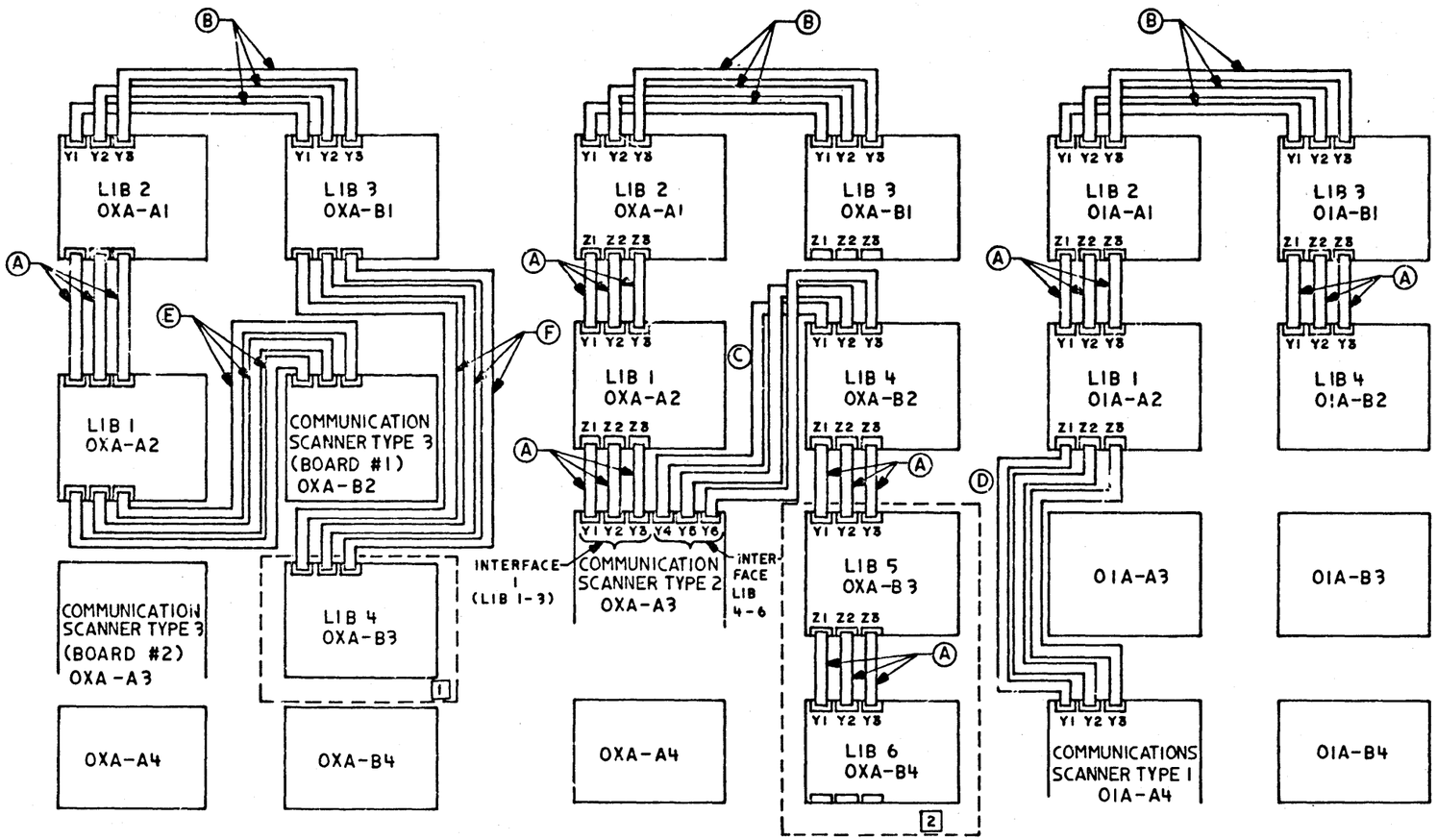

TYPE 3 SCANNER CABLING SCHEME TYPE 2 SCANNER CABLING SCHEME TYPE 1 SCANNER CABLING SCHEME

NOTES

1. LIB POSITION 4 CAN ONLY BE INSTALLED IN EXPANSION FRAMES
2. LIB POSITIONS 5 & 6 CAN ONLY BE INSTALLED IN EXPANSION FRAMES

(A) CROSSOVER CABLE P/N 5802876 3 REQUIRED
(B) LIB TO LIB CABLE GROUP P/N 5997447 1 REQUIRED
(C) COMMUNICATIONS SCANNER TYPE 2 TO LIB CABLE GROUP P/N 5997449 1 REQUIRED
(D) COMMUNICATIONS SCANNER TYPE 1 TO LIB CABLE GROUP P/N 5997444 REQUIRED
(E) COMMUNICATIONS SCANNER TYPE 3 TO LIB CABLE GROUP P/N 1750026 REQUIRED
(F) LIB TO LIB CABLE GROUP P/N 1750027 REQUIRED

PART NO 5997899 LOGIC PG NO VA001

"THIS DOCUMENT IS THE PROPERTY OF IBM. ITS USE IS AUTHORIZED ONLY FOR RESPONDING TO A REQUEST FOR QUOTATION OR FOR THE PERFORMANCE OF WORK FOR IBM. ALL QUESTIONS MUST BE REFERRED TO THE IBM PURCHASING DEPARTMENT.

IBM

NAME	LIB CABLE CHART				
DESIGN	WZ	OCT71	SHT OF	RED	JAN72
DETAIL	TS	JUN76			MAY72
CHECK	DD	JAN72	CLASSIFICATION		JUN76
APPRO	HB	JAN72	WZ	OCT71	

DATE	CHANGE NO	DATE	CHANGE NO
JAN72	309520C		
MAY72	309543		
JUN76	315618		

MUST CONFORM TO ENG SPEC

DEVELOPMENT NO

LOGIC PG NO VA001

5997899 C

"THIS DOCUMENT IS THE PROPERTY OF IBM; ITS USE DISCLOSURE OR REPRODUCTION IS AUTHORIZED ONLY TO THE EXTENT NECESSARY TO SUPPORT THE WORK FOR IBM. ALL QUESTIONS MUST BE REFERRED TO THE IBM PURCHASING DEPARTMENT."

LIB ADDRESS ERROR , LOCAL STORE PARITY ERROR AND TERMINATION

5997900 C

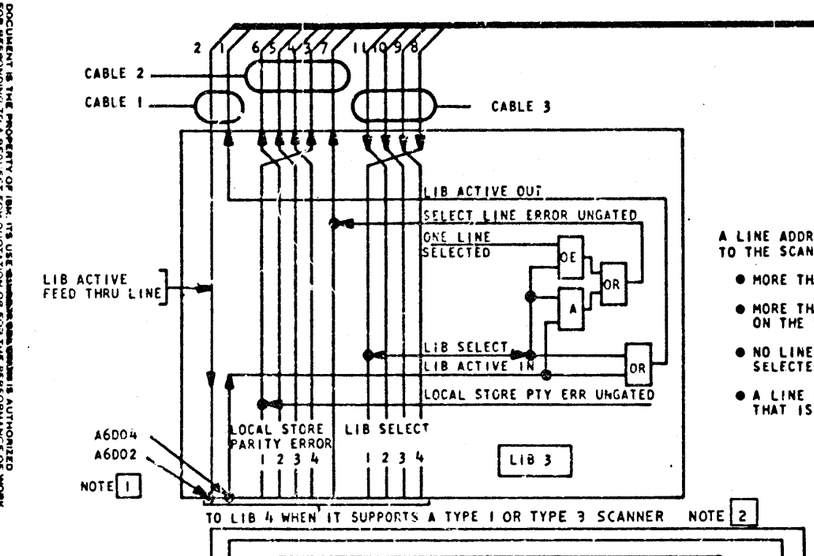

A LINE ADDRESS ERROR IS SIGNALED TO THE SCANNER WHEN:

- MORE THAN ONE LIB IS SELECTED
- MORE THAN ONE LINE IS SELECTED ON THE SELECTED LIB
- NO LINE IS SELECTED ON THE SELECTED LIB
- A LINE IS SELECTED ON A LIB THAT IS NOT SELECTED

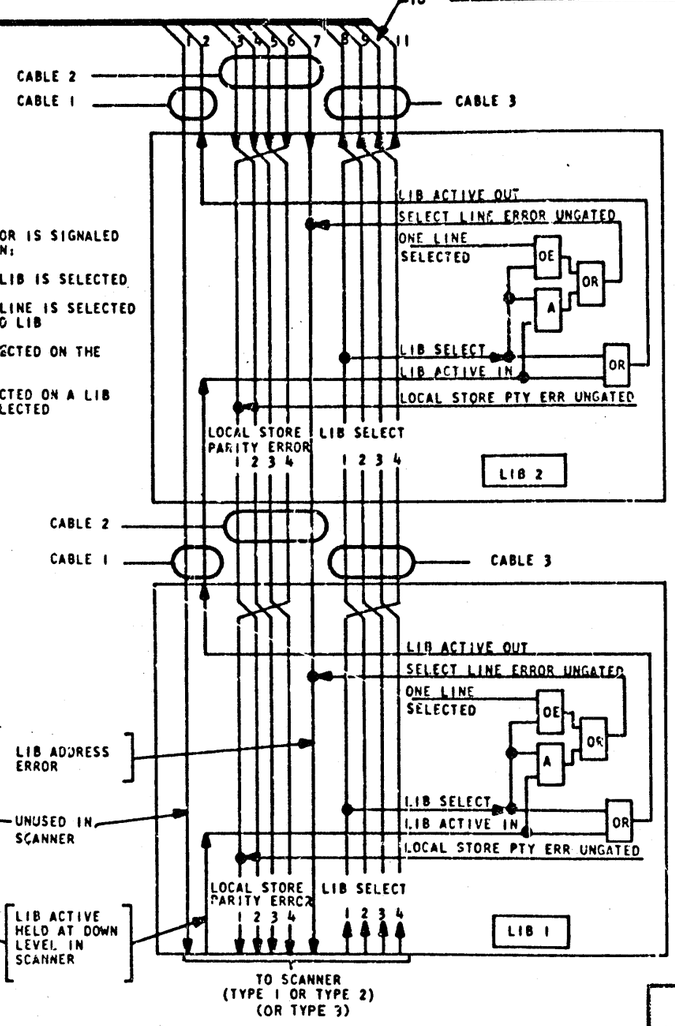

NOTES:

1. AN EXTERNAL JUMPER BETWEEN A6D02 AND A6D04 IS REQUIRED ON THE LAST LIB OF EACH INTERFACE WHEN:
   - LIB POSITIONS 3 OR 4 IS THE LAST LIB ATTACHED TO A TYPE 1 OR TYPE 3 SCANNER
   - LIB POSITION 3 IS THE LAST LIB ATTACHED TO THE TYPE 2 SCANNER INTERFACE STRING 1
   - LIB POSITIONS 4,5, OR 6 IS ATTACHED TO THE TYPE 2 SCANNER INTERFACE STRING 2
2. TERMINATION OF SCANNER INTERFACE LINES IN CABLE 1, 2, AND 3 IS PROVIDED BY RESISTORS ON THE N885 CARD P/N 5862885, PLUGGED INTO THE A4 SOCKET OF THE LAST LIB BOARD OF EACH SCANNER INTERFACE. ONLY ONE CARD SHOULD BE USED ON EACH SCANNER INTERFACE. TYPE 2 SCANNER HAS TWO INTERFACES.
3. FOR LIB POSITION 4 ON A TYPE 3 SCANNER INSTALL CARD P/N 5862885 IN SOCKET A5 AND WIRE-WRAP FOLLOWING YELLOW WIRE JUMPERS: B5B06-A5B07, F6B04-A5B02, B6A04-A5B04, B6B04-A5B05, AND B6C04-A5B08

	NAME	DATE	CHANGE NO
DESIGN	RC	OCT71	
DETAIL	HP	JAN72	
CHECK	DD	JAN72	
APPRO	HB	JAN72	

IBM

LIB ADDRESS ERROR AND LOCAL STORE PARITY ERROR

SHT OF

CLASSIFICATION

MUST CONFORM TO ENG SPEC

DEVELOPMENT NO	DATE	CHANGE NO
316667	JAN78	
315618	JUN76	
309543	MAY72	
309520C	JAN72	

LOGIC PG NO

PART NO 5997900

LOGIC PG NO VA002

5997900 C

THIS DOCUMENT IS THE PROPERTY OF IBM. ITS USE [redacted] IS AUTHORIZED ONLY FOR RESPONDING TO A REQUEST FOR QUOTATION OR FOR THE PERFORMANCE OF WORK FOR IBM. ALL QUESTIONS MUST BE REFERRED TO THE IBM PURCHASING DEPARTMENT.

IBM

	NAME	DATE
	LINE SET IA START STOP	
	LINE PAIR	
DESIGN	WZ OCT71	JAN72
DETAIL	VR OCT71	MAR72
CHECK	DD JAN72	MAY72
APPRO	HB JAN72	

CLASSIFICATION

MUST CONFORM TO ENG SPEC

DEVELOPMENT NO	CHANGE NO
	309520C
	309540
	309543

LOGIC PG NO	DATE	CHANGE NO

C 5997901

5997901 C

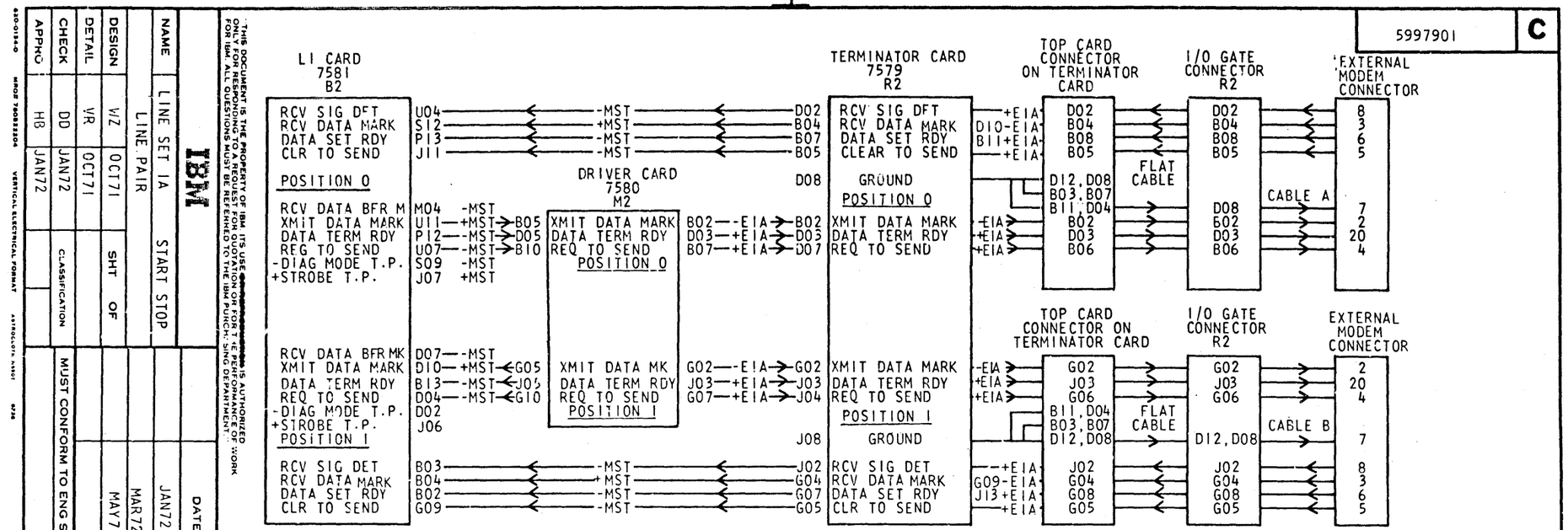

CARD LOCATIONS ARE SHOWN FOR LINES 0 & 1. REFER TO VA000 FOR CARD LOCATIONS OF OTHER LINES.

NOTES

1. XI BOARD WIRING CONNECTS ALL CARDS OF LINE PAIRS
2. FLAT CABLE P/N 5997936 CONNECTS FROM I/O GATE TO TOP CARD CONNECTOR OF TERMINATE CARD
3. EIA LEVELS +3V TO +25V=SPACE=CONTROL ON
   -3V TO -25V=MARK=CONTROL OFF
4. SIGNALS DRIVEN FROM 3705 SHOULD RANGE BETWEEN ±5V AND ±15V
5. LINE SET IA USES EXTERNAL MODEM CABLE P/N 5993200 TO CONNECT FROM EXTERNAL MODEM TO I/O GATE.

PART NO 5997901

LOGIC PG NO VA003

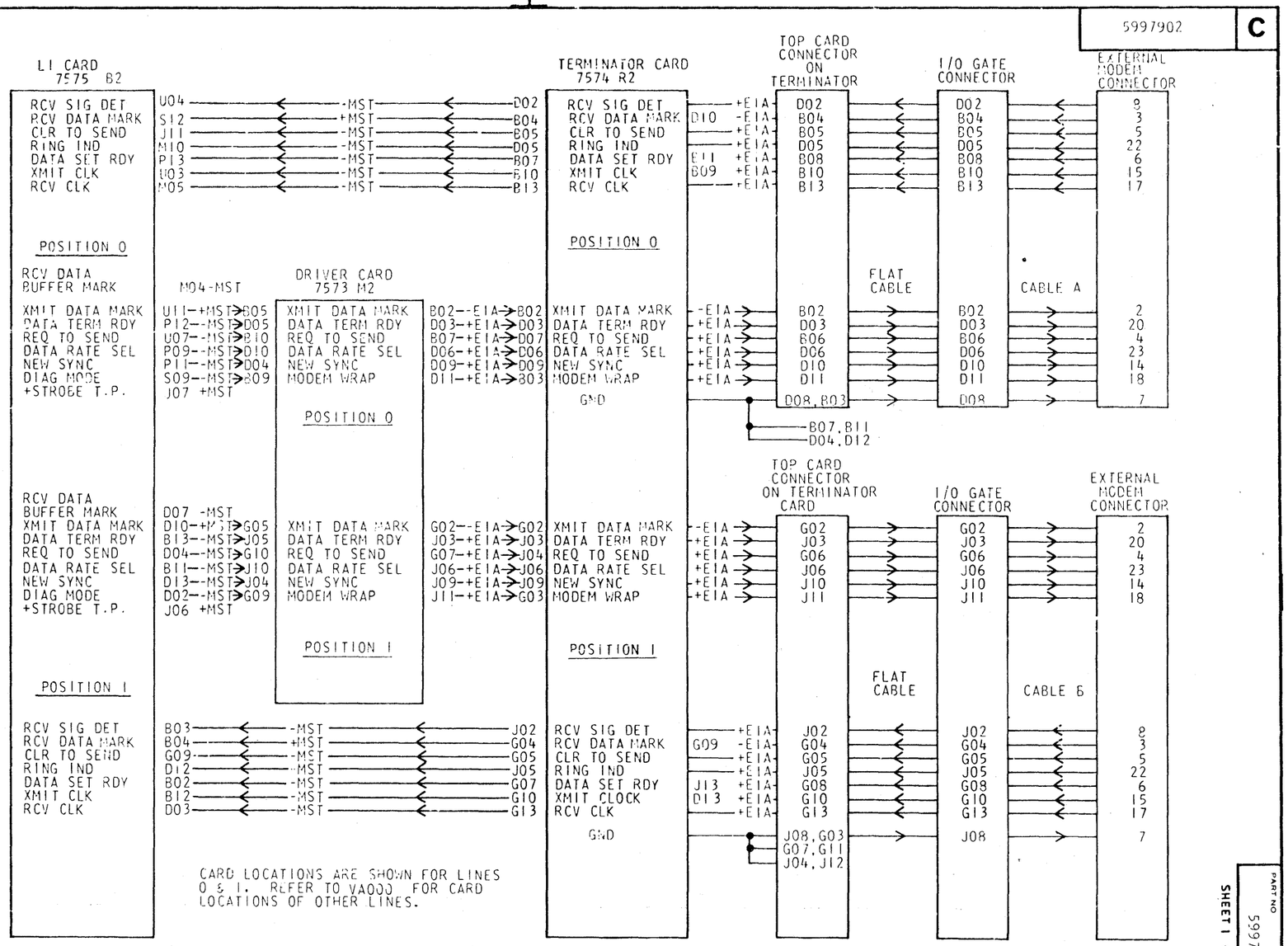

NOTES

1. LINE SET ID EXTERNAL MODEM CABLE P/N 5993200 OR 1785919 OR 1785921 CONNECTS FROM EXTERNAL MODEM TO I/O GATE
2. FLAT CABLE P/N 5997936 CONNECTS FROM I/O GATE TO TOP CARD CONNECTOR OF TERMINATOR CARD
3. EIA LEVELS +3V TO +25V=SPACE=CONTROL ON
   -3V TO -25V=MARK=CONTROL OFF
4. SIGNALS DRIVEN FROM 3705 SHOULD RANGE BETWEEN ±5V AND ±15V

NAME	LINE SET ID EIA SYNC HDX		
LINE PAIR			
DESIGN	WZ	OCT71	SHT 1 OF 6
DETAIL	VR	OCT71	
CHECK	DD	JAN72	CLASSIFICATION
APPRO	HB	JAN72	

DATE	CHANGE NO	DATE	CHANGE NO
JAN72	309520C	SEP80	322670
MAR72	309540		
MAY72	309543		
OCT72	309944		

MUST CONFORM TO ENG SPEC

DEVELOPMENT NO

LOGIC PG NO

5997902

C

PART NO 5997902

LOGIC PG NO VA004

SHEET 1 OF 6

THIS DOCUMENT IS THE PROPERTY OF IBM. ITS USE [redacted] IS AUTHORIZED ONLY FOR RESPONDING TO A REQUEST FOR QUOTATION OR FOR THE PERFORMANCE OF WORK FOR IBM. ALL QUESTIONS MUST BE REFERRED TO THE IBM PURCHASING DEPARTMENT.

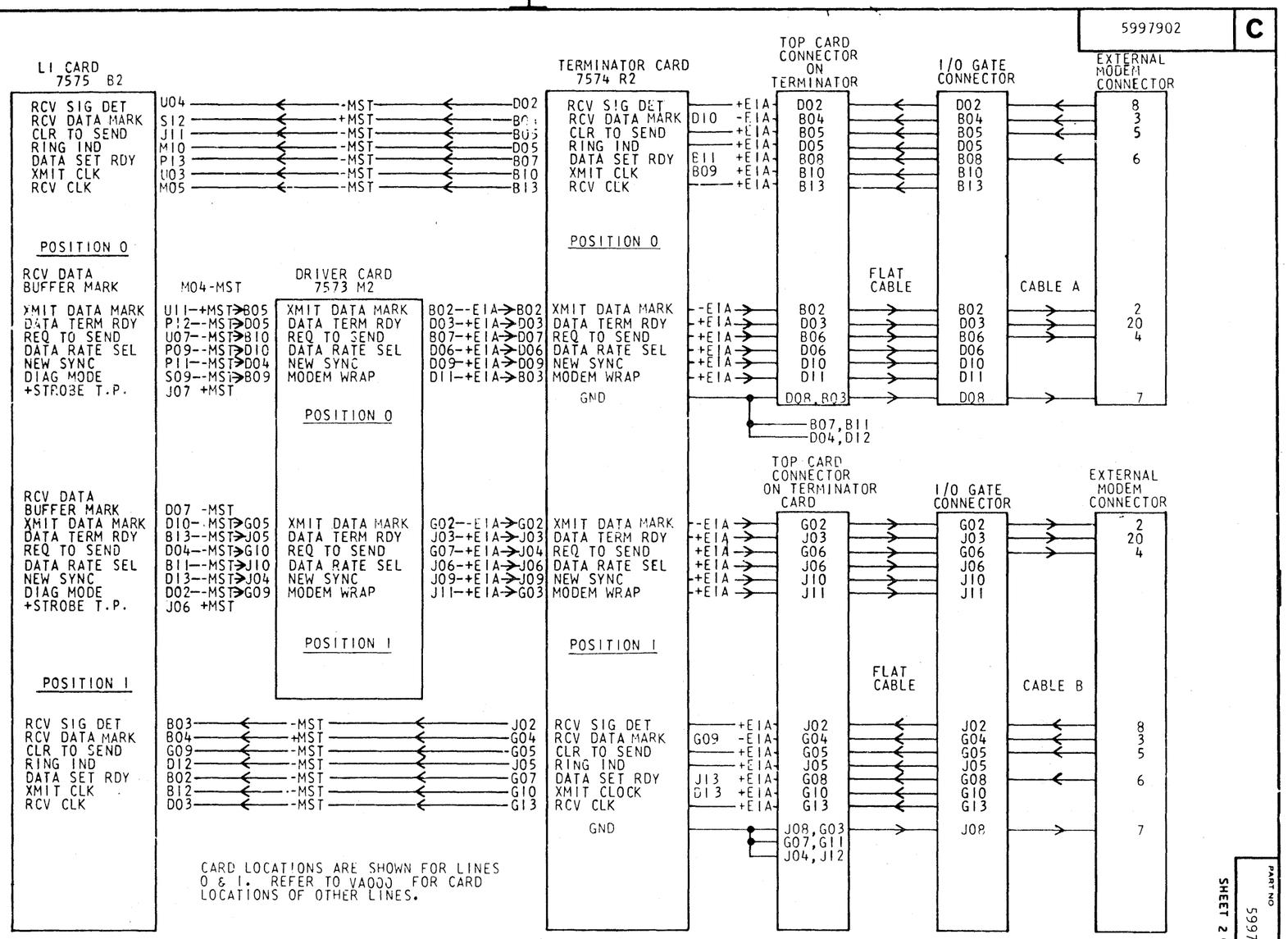

NOTES

1. LINE SET ID EXTERNAL MODEM CABLE P/N 5993200 OR 1785919 OR 1785921 CONNECTS FROM EXTERNAL MODEM TO I/O GATE
2. FLAT CABLE P/N 5997936 CONNECTS FROM I/O GATE TO TOP CARD CONNECTOR OF TERMINATOR CARD
3. EIA LEVELS +3V TO +25V=SPACE=CONTROL ON
   -3V TO -25V=MARK=CONTROL OFF
4. SIGNALS DRIVEN FROM 3705 SHOULD RANGE BETWEEN ±5V AND ±15V

PART NO 5997902

LOGIC PG NO VA004

SHEET 2 OF 6

IBM

NAME	LINE SET ID EIA START		
DESIGN	WZ	OCT71	SHT 2 OF 6
DETAIL	VR	OCT71	
CHECK	DD	JAN72	CLASSIFICATION
APPRO	HB	JAN72	

STOP HDX LINE PAIR

MUST CONFORM TO ENG SPEC

DEVELOPMENT NO

LOGIC PG NO

DATE	SEP80	
CHANGE NO	322670	
DATE		
CHANGE NO		

C 5997902

THIS DOCUMENT IS THE PROPERTY OF IBM. ITS USE [redacted] IS AUTHORIZED ONLY FOR RESPONDING TO A REQUEST FOR QUOTATION OR FOR THE PERFORMANCE OF WORK FOR IBM. ALL QUESTIONS MUST BE REFERRED TO THE IBM PURCHASING DEPARTMENT.

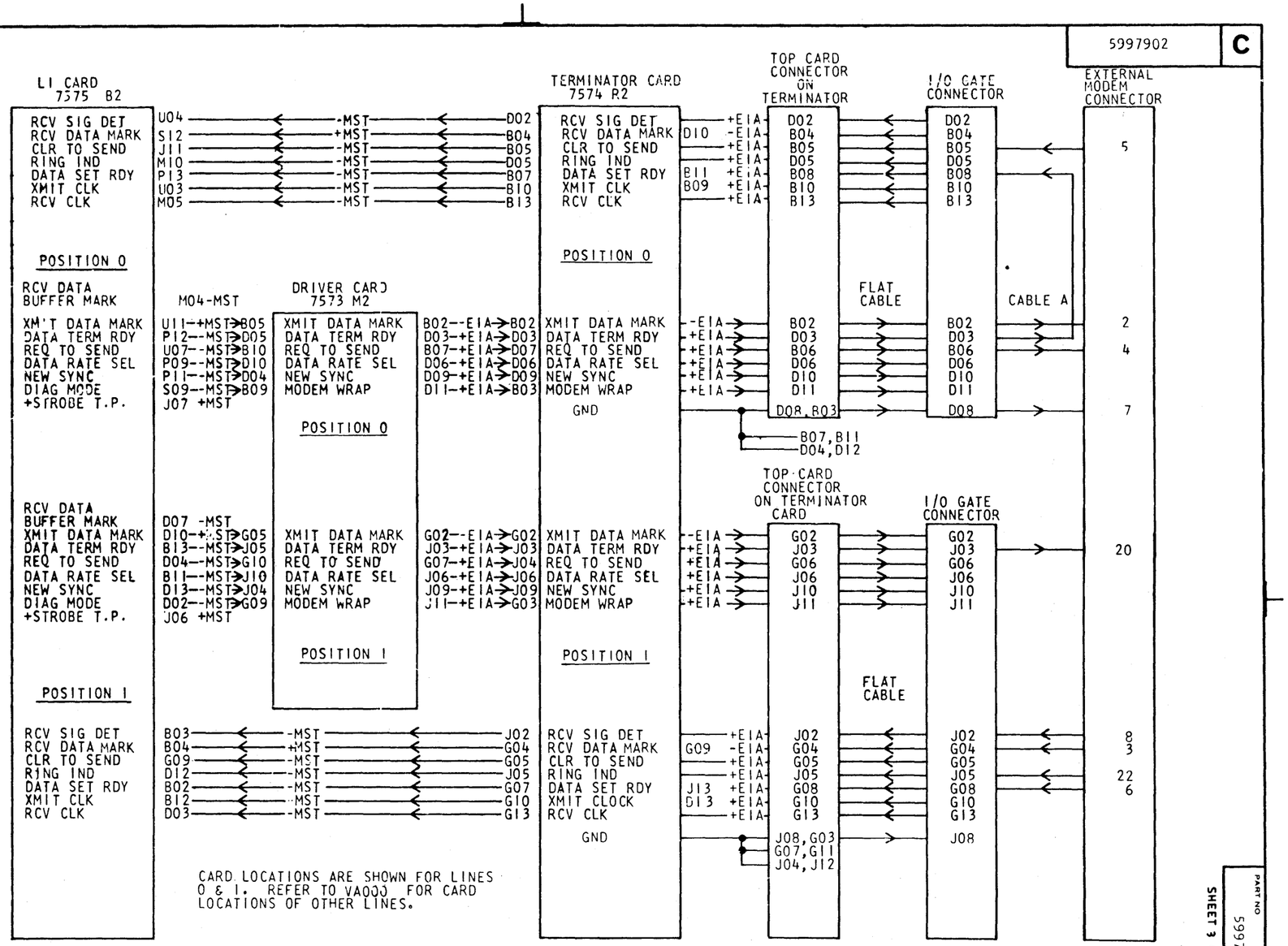

NOTES

1. LINE SET ID EXTERNAL MODEM CABLE P/N 5997489 CONNECTS FROM EXTERNAL MODEM TO I/O GATE
2. FLAT CABLE P/N 5997936 CONNECTS FROM I/O GATE TO TOP CARD CONNECTOR OF TERMINATOR CARD
3. EIA LEVELS +3V TO +25V=SPACE=CONTROL ON
   -3V TO -25V=MARK=CONTROL OFF
4. SIGNALS DRIVEN FROM 3705 SHOULD RANGE BETWEEN ±5V AND ±15V

PART NO 5997902

LOGIC PG NO VA004

SHEET 3 OF 6

IBM

NAME	LINE SET ID EIA START	DATE	SEP80
	STOP FDX		
DESIGN	WZ	OCT71	SHT 3 OF 6
DETAIL	VR	OCT71	
CHECK	DD	JAN72	CLASSIFICATION
APPRO	HB	JAN72	

MUST CONFORM TO ENG SPEC

DEVELOPMENT NO

CHANGE NO 322670

LOGIC PG NO

DATE

CHANGE NO

5997902

C

"THIS DOCUMENT IS THE PROPERTY OF IBM. ITS USE OR REPRODUCTION IS AUTHORIZED ONLY FOR RESPONDING TO A REQUEST FOR QUOTATION OR FOR THE PERFORMANCE OF WORK FOR IBM. ALL QUESTIONS MUST BE REFERRED TO THE IBM PURCHASING DEPARTMENT."

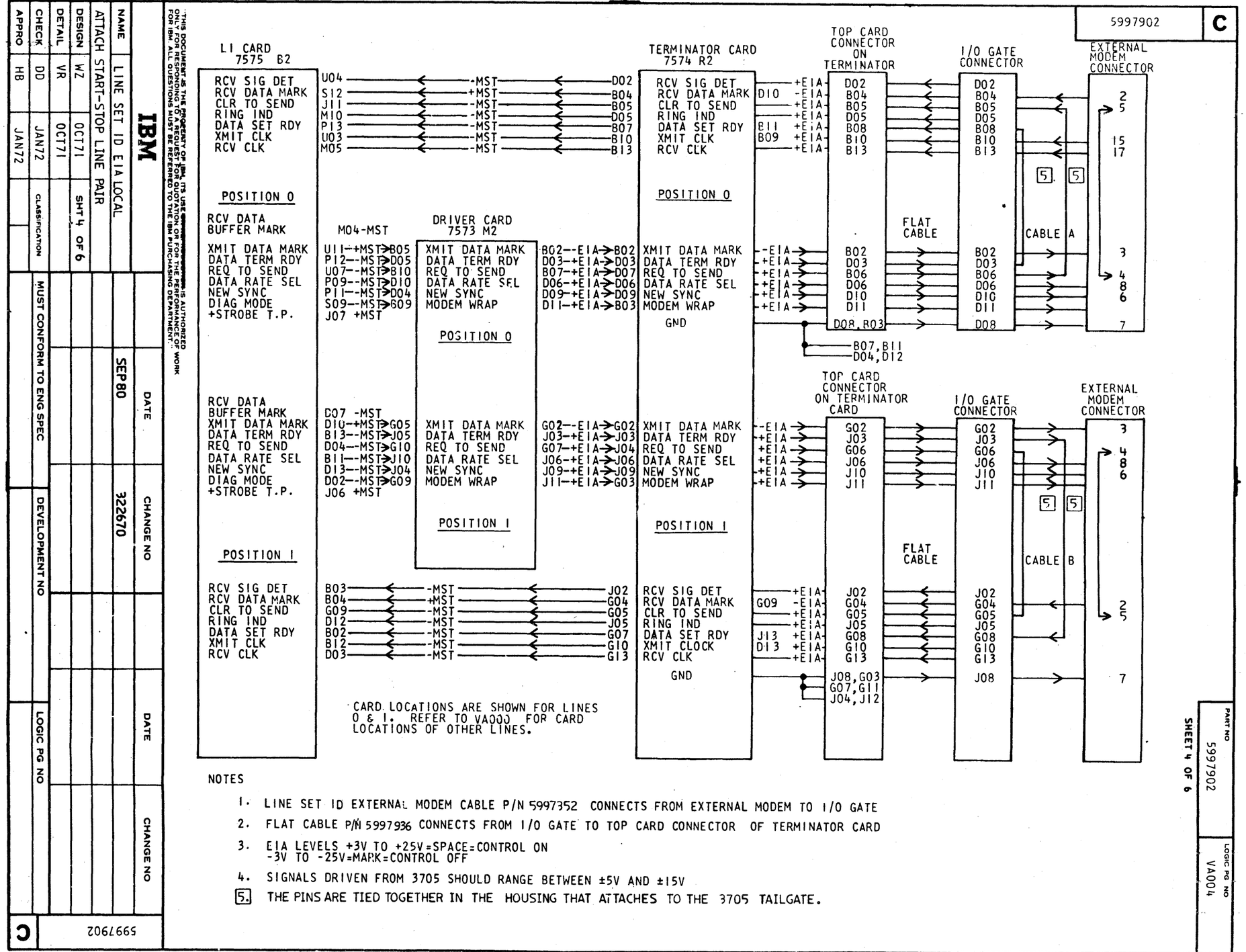

NOTES

1. LINE SET ID EXTERNAL MODEM CABLE P/N 5997352 CONNECTS FROM EXTERNAL MODEM TO I/O GATE
2. FLAT CABLE P/N 5997936 CONNECTS FROM I/O GATE TO TOP CARD CONNECTOR OF TERMINATOR CARD
3. EIA LEVELS +3V TO +25V=SPACE=CONTROL ON
   -3V TO -25V=MARK=CONTROL OFF
4. SIGNALS DRIVEN FROM 3705 SHOULD RANGE BETWEEN ±5V AND ±15V

[5.] THE PINS ARE TIED TOGETHER IN THE HOUSING THAT ATTACHES TO THE 3705 TAILGATE.

THIS DOCUMENT IS THE PROPERTY OF IBM. ITS USE OR DISCLOSURE IS AUTHORIZED ONLY FOR RESPONDING TO AN IBM REQUEST FOR QUOTATION OR FOR THE PERFORMANCE OF WORK FOR IBM. ALL QUESTIONS MUST BE REFERRED TO THE IBM PURCHASING DEPARTMENT.

IBM

	NAME	DATE
APPRO	HB	JAN72
CHECK	DD	JAN72
DETAIL	VR	OCT71
DESIGN	WZ	OCT71

LINE SET ID EIA LOCAL

ATTACH START-STOP LINE PAIR

SHT 4 OF 6

CLASSIFICATION

MUST CONFORM TO ENG SPEC

DEVELOPMENT NO

LOGIC PG NO

	DATE	CHANGE NO
	SEP80	322670

DATE

CHANGE NO

DATE

CHANGE NO

5997902

PART NO 5997902

LOGIC PG NO VA004

SHEET 4 OF 6

THIS DOCUMENT IS THE PROPERTY OF IBM, ITS USE OR DISCLOSURE IS AUTHORIZED ONLY IN RESPONDING TO A REQUEST FOR QUOTATION OR FOR THE PERFORMANCE OF WORK FOR IBM. ALL QUESTIONS MUST BE REFERRED TO THE IBM PURCHASING DEPARTMENT.

	NAME	DATE
APPRO	HB	JAN72
CHECK	DD	JAN72
DETAIL	VR	OCT71
DESIGN	WZ	OCT71

IBM

LINE SET ID EIA LOCAL

ATTACH SYNC LINE PAIR

SHT 5 OF 6

CLASSIFICATION

MUST CONFORM TO ENG SPEC

DEVELOPMENT NO

LOGIC PG NO

CHANGE NO	DATE
322670	SEP80

5997902 C

5997902 C

LI CARD
7575 B2

RCV SIG DET
RCV DATA MARK
CLR TO SEND
RING IND
DATA SET RDY
XMIT CLK
RCV CLK

U04 -MST D02
S12 +MST B04
J11 -MST B05
M10 -MST D05
P13 -MST B07
U03 -MST B10
M05 -MST B13

POSITION 0

RCV DATA
BUFFER MARK
XMIT DATA MARK
DATA TERM RDY
REQ TO SEND
DATA RATE SEL
NEW SYNC
DIAG MODE
+STROBE T.P.

M04-MST
U11-+MST→B05
P12--MST→D05
U07--MST→B10
P09--MST→D10
P11--MST→D04
S09--MST→B09
J07 +MST

DRIVER CARD
7573 M2

XMIT DATA MARK
DATA TERM RDY
REQ TO SEND
DATA RATE SEL
NEW SYNC
MODEM WRAP

POSITION 0

B02--EIA→B02
D03-+EIA→D03
B07-+EIA→D07
D06-+EIA→D06
D09-+EIA→D09
D11-+EIA→B03

TERMINATOR CARD
7574 R2

RCV SIG DET
RCV DATA MARK
CLR TO SEND
RING IND
DATA SET RDY
XMIT CLK
RCV CLK

POSITION 0

XMIT DATA MARK
DATA TERM RDY
REQ TO SEND
DATA RATE SEL
NEW SYNC
MODEM WRAP
GND

TOP CARD CONNECTOR ON TERMINATOR

D10 -EIA
+EIA
B11 +EIA
B09 +EIA
+EIA

D02 B04 D05 B08 B10 B13

-EIA
+EIA
+EIA
+EIA
+EIA
+EIA

B02 D03 D06 D10 D11 D08, B03

B07, B11
D04, D12

FLAT CABLE

I/O GATE CONNECTOR

D02 B04 B05 D05 B08 B10 B13

B02 D03 B06 D06 D10 D11 D08

CABLE A

EXTERNAL MODEM CONNECTOR

2
5
20
3
6
4
8
7

RCV DATA
BUFFER MARK
XMIT DATA MARK
DATA TERM RDY
REQ TO SEND
DATA RATE SEL
NEW SYNC
DIAG MODE
+STROBE T.P.

D07 -MST
D10--+MST→G05
B13--MST→J05
D04--MST→G10
B11--MST→J10
D13--MST→J04
D02--MST→G09
J06 +MST

XMIT DATA MARK
DATA TERM RDY
REQ TO SEND
DATA RATE SEL
NEW SYNC
MODEM WRAP

POSITION 1

G02--EIA→G02
J03-+EIA→J03
G07-+EIA→J04
J06-+EIA→J06
J09-+EIA→J09
J11-+EIA→G03

XMIT DATA MARK
DATA TERM RDY
REQ TO SEND
DATA RATE SEL
NEW SYNC
MODEM WRAP

POSITION 1

TOP CARD CONNECTOR ON TERMINATOR CARD

-EIA
+EIA
+EIA
+EIA
+EIA
+EIA

G02 J03 G06 J06 J10 J11

I/O GATE CONNECTOR

G02 J03 G06 J06 J10 J11

EXTERNAL MODEM CONNECTOR

3
6
4
8

POSITION 1

RCV SIG DET
RCV DATA MARK
CLR TO SEND
RING IND
DATA SET RDY
XMIT CLK
RCV CLK

B03 -MST J02
B04 +MST G04
G09 -MST G05
D12 -MST J05
B02 -MST G07
B12 -MST G10
D03 -MST G13

RCV SIG DET
RCV DATA MARK
CLR TO SEND
RING IND
DATA SET RDY
XMIT CLOCK
RCV CLK
GND

G09 -EIA
+EIA
+EIA
J13 +EIA
D13 +EIA
+EIA

J02 G04 G05 J05 G08 G10 G13

J08, G03
G07, G11
J04, J12

FLAT CABLE

I/O GATE CONNECTOR

J02 G04 G05 J05 G08 G10 G13

J08

CABLE B

EXTERNAL MODEM CONNECTOR

2
5
20
7

CARD LOCATIONS ARE SHOWN FOR LINES 0 & 1. REFER TO VA000 FOR CARD LOCATIONS OF OTHER LINES.

NOTES

1. LINE SET TO EXTERNAL MODEM CABLE P/N 5997529 CONNECTS FROM EXTERNAL MODEM TO I/O GATE
2. FLAT CABLE P/N 5997936 CONNECTS FROM I/O GATE TO TOP CARD CONNECTOR OF TERMINATOR CARD
3. EIA LEVELS +3V TO +25V=SPACE=CONTROL ON
   -3V TO -25V=MARK=CONTROL OFF
4. SIGNALS DRIVEN FROM 3705 SHOULD RANGE BETWEEN ±5V AND ±15V

PART NO 5997902

LOGIC PG NO VA004

SHEET 5 OF 6

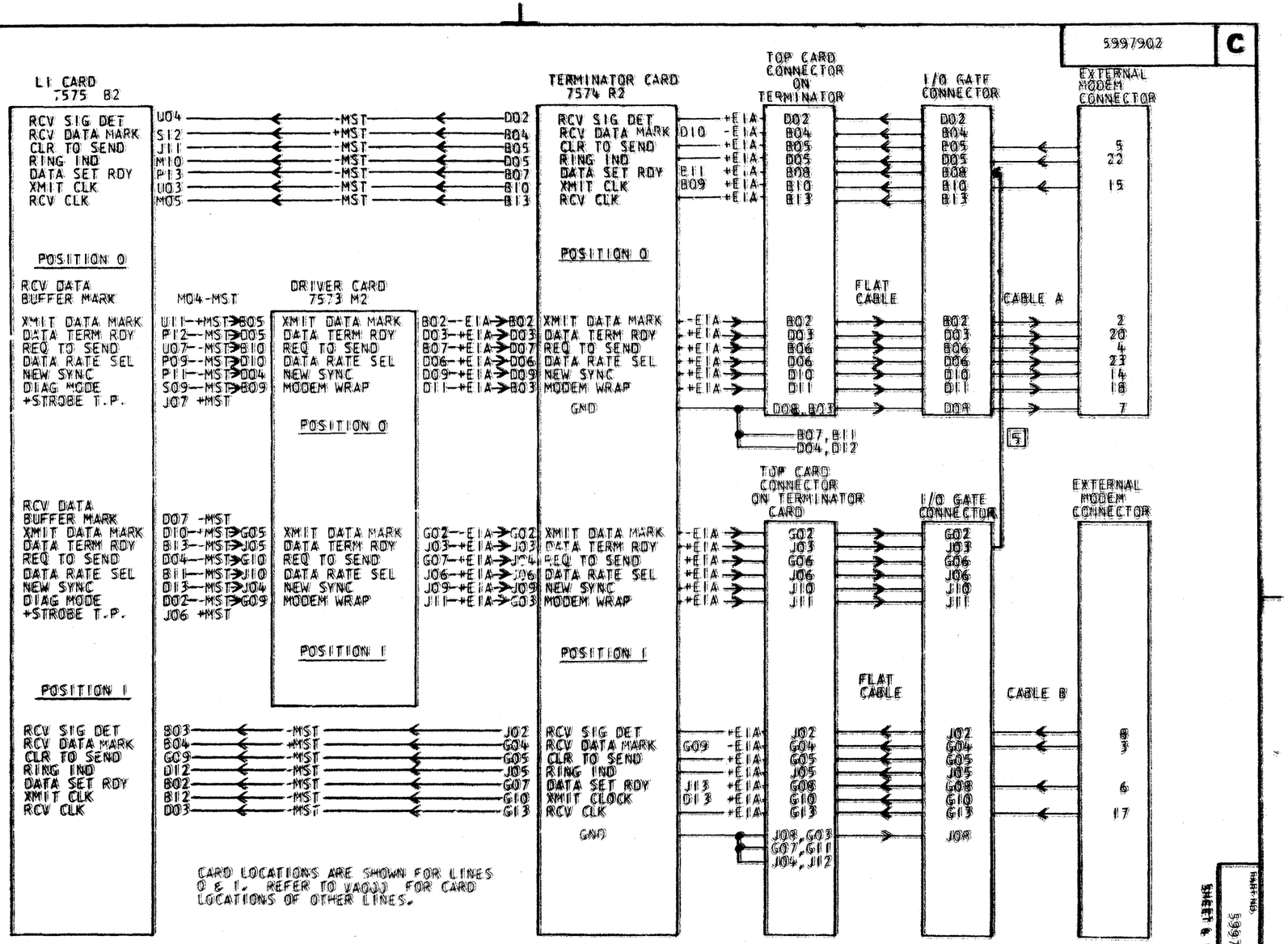

NOTES

1. LINE SET 11 EXTERNAL MODEM CABLE P/N5997454 OR 1785928 CONNECTS FROM EXTERNAL MODEM TO I/O GATE
2. FLAT CABLE P/N 5997936 CONNECTS FROM I/O GATE TO TOP CARD CONNECTOR OF TERMINATOR CARD
3. EIA LEVELS +3V TO +25V=SPACE=CONTROL ON
   -3V TO -25V=MARK=CONTROL OFF
4. SIGNALS DRIVEN FROM 3705 SHOULD RANGE BETWEEN ±5V AND ±15V
5. B08 TO J03 JUMPERED TOGETHER EXTERNALLY IN MODEM CABLE.

NAME	LINE SET ID EIA SYNC FDX	DATE	SEP80
LINE		CHANGE NO	322670
DESIGN	WZ	OCT71	SHT 6 OF 6
DETAIL	VR	OCT71	
CHECK	DD	JAN72	CLASSIFICATION
APPRO	HB	JAN72	

MUST CONFORM TO ENG SPEC

DEVELOPMENT NO

LOGIC PG NO

DATE

CHANGE NO

5997902

C

PART NO. 5997902

LOGIC PG NO VA004

SHEET 6 OF 6

THIS DOCUMENT IS THE PROPERTY OF IBM. ITS USE ON ANY OTHER PURPOSE IS AUTHORIZED ONLY FOR RESPONDING TO A REQUEST FOR QUOTATION OR FOR THE PERFORMANCE OF WORK FOR IBM. ALL QUESTIONS MUST BE REFERRED TO THE IBM PURCHASING DEPARTMENT.

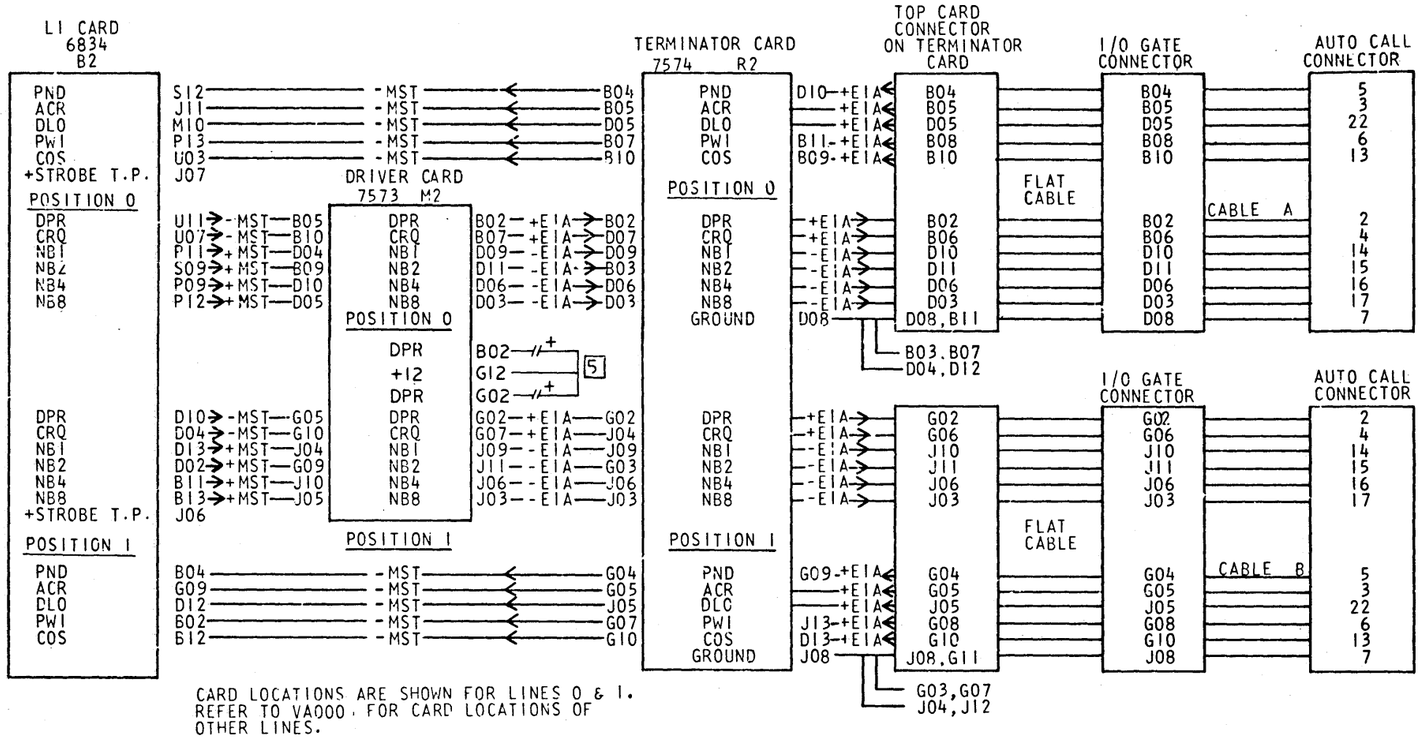

CARD LOCATIONS ARE SHOWN FOR LINES 0 & 1.
REFER TO VA000 FOR CARD LOCATIONS OF
OTHER LINES.

NOTES

1. EXTERNAL CABLE P/N 5997462 CONNECTS FROM AUTO CALL UNIT TO I/O GATE
2. FLAT CABLE P/N 5997936 CONNECTS FROM I/O GATE TO TOP CARD CONNECTOR OF TERMINATOR CARD
3. EIA LEVELS +3V TO +25V=SPACE=CTL ON
   -3V TO -25V=MARK=CTL OFF
4. SIGNALS DRIVEN FROM 3705 SHOULD RANGE BETWEEN ±5V AND ±15V
5. A CAPACITOR ASM, P/N 1757929 (.68/.68 MFD), IS INSTALLED ON PIN SIDE OF BOARD WITH EACH LINE SET IE WHICH WAS BUILT AT EC LEVEL 316663 OR LATER, AND IS AVAILABLE FOR USE WITH ACU'S WHICH REQUIRE A DELAY OF THE DIGIT-PRESENT SIGNAL RELATIVE DIGIT-LINES SIGNALS. EFFECTIVE DELAY IS APPROXIMATELY 0.4 MILLISECONDS.

5997903 C

PART NO 5997903

LOGIC PG NO VA005

IBM

NAME	LINE SET IE AUTO CALL LINE		
PAIR			
DESIGN	WZ	OCT71	SHT OF
DETAIL	VR	OCT71	
CHECK	DD	JAN72	CLASSIFICATION
APPRO	HB	JAN72	

DATE	CHANGE NO	DATE	CHANGE NO
JAN72	309520C		
MAY72	309543		
SEP76	316663		

MUST CONFORM TO ENG SPEC

DEVELOPMENT NO

LOGIC PG NO

5997903 C

"THIS DOCUMENT IS THE PROPERTY OF IBM. ITS USE [redacted] IS AUTHORIZED ONLY FOR RESPONDING TO A REQUEST FOR QUOTATION OR FOR THE PERFORMANCE OF WORK FOR IBM. ALL QUESTIONS MUST BE REFERRED TO THE IBM PURCHASING DEPARTMENT."

5997904 C

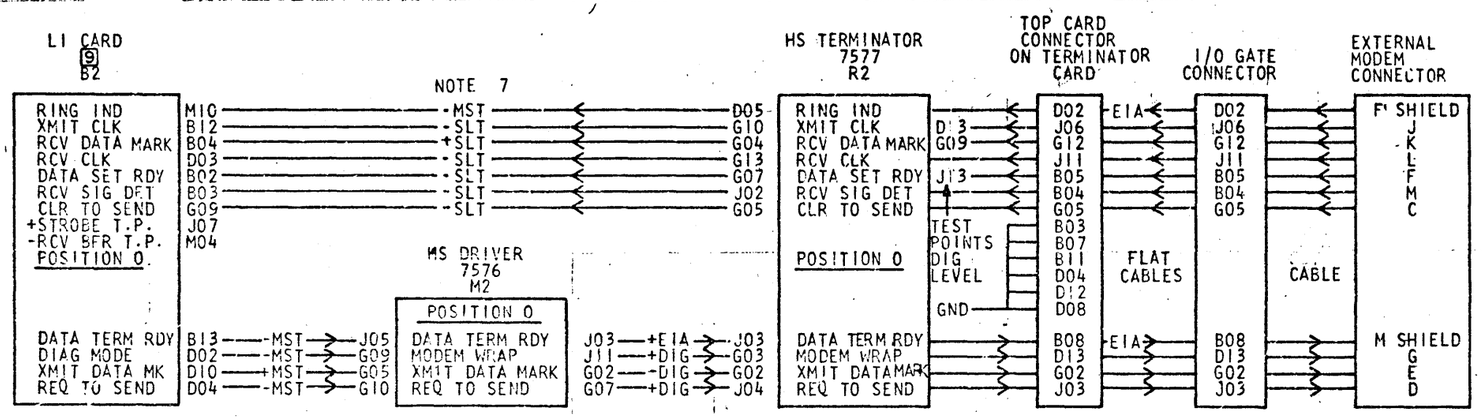

CARD LOCATIONS ARE SHOWN FOR LINE 0.
REFER TO VA000 FOR CARD LOCATIONS OF OTHER LINES.

NOTES

1. XI BOARD WIRING CONNECTS ALL CARDS OF LINE PAIR.
2. EXTERNAL MODEM CABLE PN 5993201 CONNECTS FROM EXTERNAL MODEM TO I/O GATE
3. FLAT CABLE P/N 5997936 CONNECTS FROM I/O GATE TO TOP CARD CONNECTOR TO TERMINATE CARD.
4. ONLY ONE DIGITAL LINE AVAILABLE PER LINE PAIR POSITION.
5. DIGITAL LEVELS
   SPACE OR CONTROL ON = >23 MA (+1V)
   MARK OR CONTROL OFF = < 5 MA (-.7V)
   OPEN CIRCUIT CONTROL OFF
6. EIA LEVELS
   SPACE OR CONTROL ON +3V TO +25V
   MARK OF CONTROL OFF -3V TO -25V
7. SIGNALS DRIVEN FROM 3705 SHOULD RANGE BETWEEN ±5V AND ±15V
8. LEVELS

LEVELS	+	-
MST	-0.6 TO -0.9V	-1.5V TO -2.3V
SLT	+3V NOM	0V NOM
EIA	+3V TO +25V	-3V TO -25V
DIGITAL	> 23 MA	< 5 MA

9 LINE INTERFACE CARD CODE
IG 7606
IGA CF77

PART NO 5997904
LOGIC PG NO VA006

IBM

NAME	LINE SET IG OR IGA HIGH SPEED DIGITIAL SYNC		
DESIGN	WZ	OCT71	SHT OF
DETAIL	VR	OCT71	
CHECK	DD	JAN72	CLASSIFICATION
APPRO	HB	JAN72	

DATE	CHANGE NO
JAN72	309520C
MAR72	309540
MAY72	309543
OCT79	321755

MUST CONFORM TO ENG SPEC

DEVELOPMENT NO

LOGIC PG NO

5997904 C

"THIS DOCUMENT IS THE PROPERTY OF IBM. ITS USE [redacted] IS AUTHORIZED ONLY FOR RESPONDING TO A REQUEST FOR QUOTATION OR FOR THE PERFORMANCE OF WORK FOR IBM. ALL QUESTIONS MUST BE REFERRED TO THE IBM PURCHASING DEPARTMENT."

5997905 C

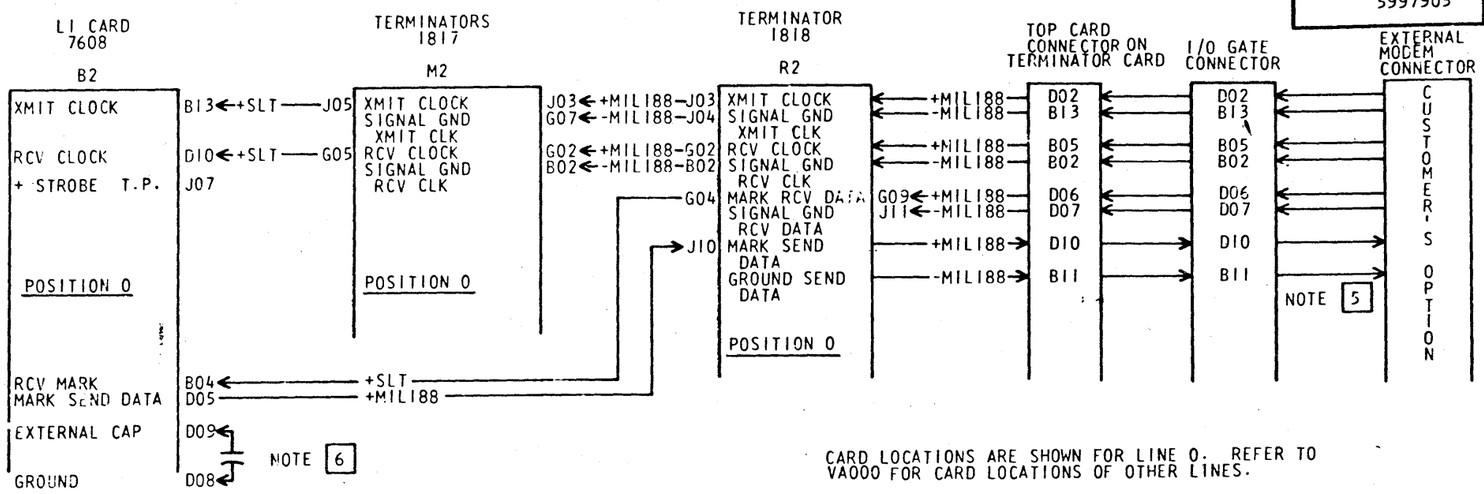

CARD LOCATIONS ARE SHOWN FOR LINE 0. REFER TO VA000 FOR CARD LOCATIONS OF OTHER LINES.

NOTES

1. XI BOARD WIRING CONNECTS ALL CARDS OF LINE PAIR.
2. MIL188 DIFFERENTIAL VOLTAGE LEVELS REFERENCED TO SIGNAL GROUND:
   MARK: +0.5V MINIMUM, +7.0V MAXIMUM (RCV); +5.0 V MIN, +7.0 V MAX (XMIT)
   SPACE: -0.5V MINIMUM, -7.0V MAXIMUM (RCV); -5.0 V MIN, -7.0 V MAX (XMIT)
3. ONLY 1 MIL188 LINE AVAILABLE PER LINE PAIR POSITION.
4. FLAT CABLE P/N 5997936 CONNECTS FROM I/O GATE TO TOP CARD CONNECTOR ON 1818 CARD.
5. NO EXTERNAL CABLE IS SUPPLIED WITH THIS FEATURE.
6. CAPACITOR VALUE DETERMINED BY BAUD RATE

CAPACITOR VALUE	CAPACITOR P/N	BAUD RATE	CAP.	SUB ASSEMBLEY
0.15 µf	483334	0 TO 149		1785293
0.10 µf	217077	150 TO 200		1785292
0.056 µf	217056	300		1857169
0.033 µf	491263	600		1785291
0.018 µf	217043	950		1857168
0.015 µf	491262	1200		5997935
0.010 µf	491228	2000		5997934
0.0082 µf	217068	2400		5997933
0.0039 µf	217067	4800		5997932
0.0024 µf	492403	7200		5158435
0.0018 µf	217063	9600		5997930
910 pf	350452	19.8K		5997931
430 pf	350443	40K		5997929
360 pf	350441	50K		5997928
300 pf	350439	56K		5997927

7. SEE PAGES VB128 AND VB129 FOR IMPEDANCE JUMPERING INFORMATION.

PART NO 5997905

LOGIC PG NO VA007

IBM

NAME	LINE SET IJ MIL188-C				
INTERFACE					
DESIGN	RC	OCT71	SHT OF		
DETAIL	VR	OCT71			
CHECK	DD	JAN72	CLASSIFICATION		
APPRO	HB	JAN72			

DATE	CHANGE NO	DATE	CHANGE NO
JAN72	309520C	NOV72	309953
MAR72	309540	MAR73	309951
MAY72	309543		
SEP72	309941		

MUST CONFORM TO ENG SPEC

DEVELOPMENT NO

LOGIC PG NO

C 5997905

THIS DOCUMENT IS THE PROPERTY OF IBM. ITS USE [redacted] IS AUTHORIZED ONLY FOR RESPONDING TO A REQUEST FOR QUOTATION OR FOR THE PERFORMANCE OF WORK FOR IBM. ALL QUESTIONS MUST BE REFERRED TO THE IBM PURCHASING DEPARTMENT.

"THIS DOCUMENT IS THE PROPERTY OF IBM. ITS USE OR DISCLOSURE IS AUTHORIZED ONLY FOR WORK FOR IBM. ALL QUESTIONS MUST BE REFERRED TO THE IBM PURCHASING DEPARTMENT." WORK

5997906 C

LI CARD
7609

B2

RCV DATA TERMINATOR
RCV CLOCK TERMINATOR
1820
R2

TOP CARD CONNECTOR ON TERMINATOR CARD

I/O GATE CONNECTOR

EXTERNAL MODEM CONNECTOR

DATA SET RDY	B02	+EIA	G07	DATA SET RDY	+EIA	D13	D13	D13	E
CLEAR TO SEND	G09	+EIA	G05	CLEAR TO SEND	+EIA	D11	D11	D11	F
RCV SIG DET	B03	+EIA	J02	RCV SIG DET	+EIA	D09	D09	D09	C
REQ TO SEND	D03	+EIA	G13	REQ TO SEND	+EIA	B13	B13	B13	H
DATA TERM RDY	D12	+EIA	J05	DATA TERM RDY	+EIA	D03	D03	D03	R
MARK RCV DATA	B04	+MST	G04	-MARK RCV DATA	G09 -V35	B04	B04	B04	T
				+MARK RCV DATA	D10 +V35	D05	D05	D05	V
				+RCV CLOCK	+V35	B08	B08	B08	X
RCV CLOCK	M05	-MST	B13	-RCV CLOCK	-V35	B10	B10	B10	
				GROUND		B07, D08	D08	D08	B
						B11, D12			

POSITION 0

FLAT CABLE

EXTERNAL MODEM CARD CABLE

XMIT DATA DRIVER
XMIT CLOCK TERMINATOR
1819
M2

POSITION 0

POSITION 0

MARK SEND DATA	D10 +MST G05	+MARK SEND DATA	J11 +V35 G03	+MARK SEND DATA	+V35	D07	D07	D07	S
		-MARK SEND DATA	G02 -V35 G02	-MARK SEND DATA	-V35	B06	B06	B06	P
		+XMIT CLOCK	D03 +V35 D03	+XMIT CLOCK	+V35	D02	D02	D02	Y
XMIT CLOCK	P11 -MST D04	-XMIT CLOCK	B02 -V35 B02	-XMIT CLOCK	-V35	B02	B02	B02	6
		+6V REGULATED	J06 J06	+6V REGULATED					

CARD LOCATIONS ARE SHOWN FOR LINE 0.
REFER TO VA000 FOR CARD LOCATIONS
OF OTHER LINES.

NOTES

1. XI BOARD WIRING CONNECTS ALL CARDS OF LINE PAIR.
2. V35 DIFFERENTIAL VOLTAGE LEVELS REFERENCED TO SIGNAL GROUND:
   MARK: -0.44V TO -0.66V
   SPACE: +0.44V TO +0.66V
3. ONLY 1 V35 LINE AVAILABLE PER LINE PAIR POSITION.
4. FLAT CABLE P/N 5997936 CONNECTS FORM I/O GATE TO TOP CARD CONNECTOR ON 1820 CARD.
5. CABLE P/N 5997479 CONNECTS FROM EXTERNAL MODEM TO I/O GATE EXTERNAL MODEM
6. THIS PIN WILL BE LABELED "AA" OR "a". BOTH LABELS ARE CORRECT.

	NAME	DATE	CHANGE NO
APPRO	HB	JAN72	
CHECK	DD	JAN72	309520C
DETAIL	VR	OCT71	309543
DESIGN	RC	OCT71	309951

1571

LINE SET IK OR IS INTERFACE

SHT OF

CLASSIFICATION

MUST CONFORM TO ENG SPEC

DEVELOPMENT NO 315618

LOGIC PG NO

PART NO 5997906

LOGIC PG NO VA008

C 5997906

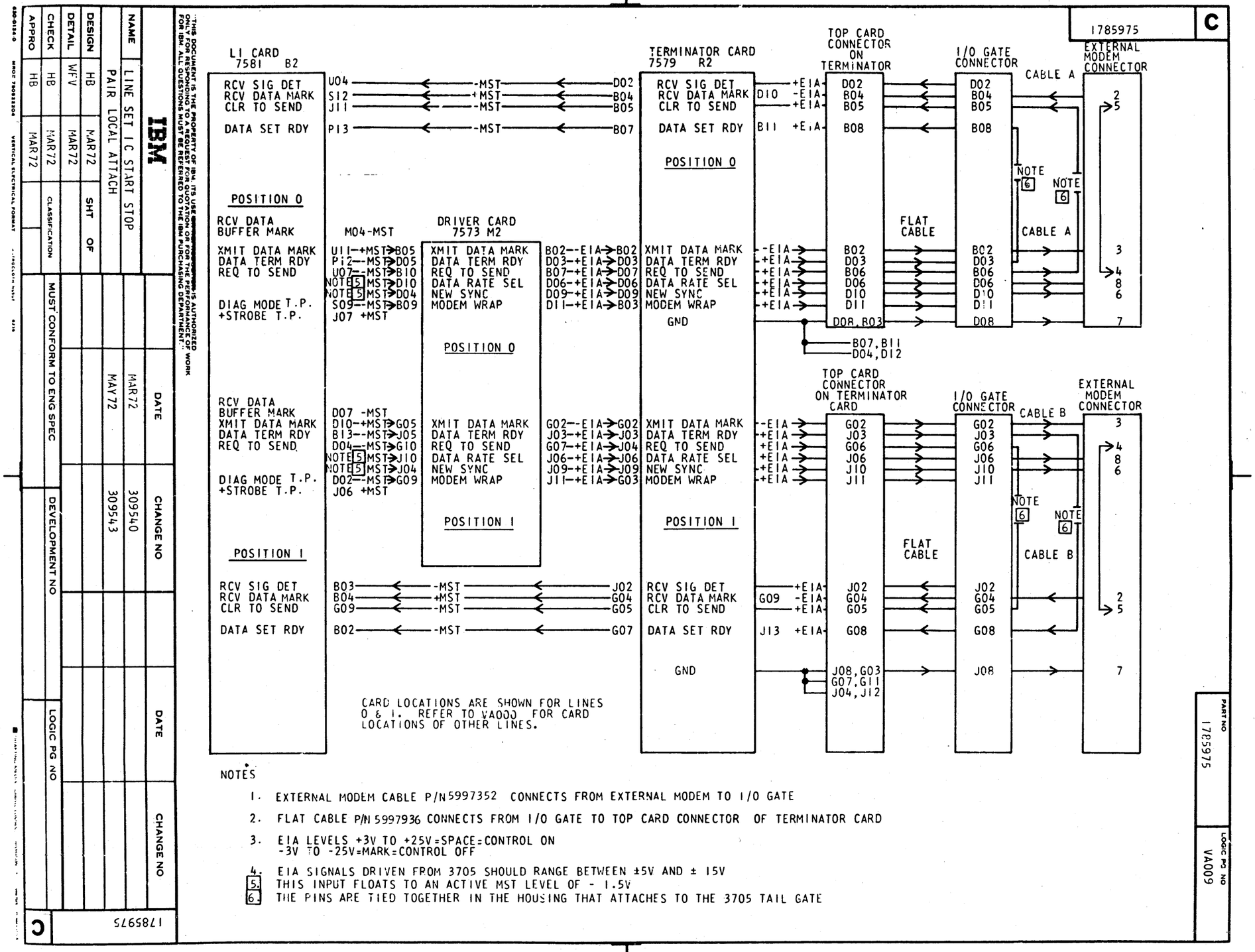
1785975
C
LI CARD
7581 B2
RCV SIG DET
RCV DATA MARK
CLR TO SEND
DATA SET RDY
U04 -MST D02
S12 +MST B04
J11 -MST B05
P13 -MST B07
POSITION 0
RCV DATA
BUFFER MARK
XMIT DATA MARK
DATA TERM RDY
REQ TO SEND
DIAG MODE T.P.
+STROBE T.P.
M04-MST
U11-+MST→B05
P12--MST→D05
U07--MST→B10
NOTE 5 MST→D10
NOTE 5 MST→D04
S09--MST→B09
J07 +MST
DRIVER CARD
7573 M2
XMIT DATA MARK
DATA TERM RDY
REQ TO SEND
DATA RATE SEL
NEW SYNC
MODEM WRAP
B02--EIA→B02
D03-+EIA→D03
B07-+EIA→D07
D06-+EIA→D06
D09-+EIA→D09
D11-+EIA→B03
POSITION 0
TERMINATOR CARD
7579 R2
RCV SIG DET
RCV DATA MARK
CLR TO SEND
DATA SET RDY
POSITION 0
XMIT DATA MARK
DATA TERM RDY
REQ TO SEND
DATA RATE SEL
NEW SYNC
MODEM WRAP
GND
D10
B11
+EIA
-EIA
B02
D03
B06
D06
D10
D11
D08, B03
B07, B11
D04, D12
TOP CARD
CONNECTOR
ON
TERMINATOR
I/O GATE
CONNECTOR
FLAT
CABLE
CABLE A
EXTERNAL
MODEM
CONNECTOR
NOTE 6
RCV DATA
BUFFER MARK
XMIT DATA MARK
DATA TERM RDY
REQ TO SEND
DIAG MODE T.P.
+STROBE T.P.
D07 -MST
D10-+MST→G05
B13--MST→J05
D04--MST→G10
NOTE 5 MST→J10
NOTE 5 MST→J04
D02--MST→G09
J06 +MST
XMIT DATA MARK
DATA TERM RDY
REQ TO SEND
DATA RATE SEL
NEW SYNC
MODEM WRAP
G02--EIA→G02
J03-+EIA→J03
G07-+EIA→J04
J06-+EIA→J06
J09-+EIA→J09
J11-+EIA→G03
POSITION 1
POSITION 1
RCV SIG DET
RCV DATA MARK
CLR TO SEND
DATA SET RDY
GND
G09
J13
G02
J03
G06
J06
J10
J11
J02
G04
G05
G08
J08, G03
G07, G11
J04, J12
TOP CARD
CONNECTOR
ON TERMINATOR
CARD
I/O GATE
CONNECTOR
FLAT
CABLE
CABLE B
EXTERNAL
MODEM
CONNECTOR
NOTE 6
B03 -MST J02
B04 +MST G04
G09 -MST G05
B02 -MST G07
CARD LOCATIONS ARE SHOWN FOR LINES
0 & 1. REFER TO VA000 FOR CARD
LOCATIONS OF OTHER LINES.
NOTES
1. EXTERNAL MODEM CABLE P/N 5997352 CONNECTS FROM EXTERNAL MODEM TO I/O GATE
2. FLAT CABLE P/N 5997936 CONNECTS FROM I/O GATE TO TOP CARD CONNECTOR OF TERMINATOR CARD
3. EIA LEVELS +3V TO +25V=SPACE=CONTROL ON
-3V TO -25V=MARK=CONTROL OFF
4. EIA SIGNALS DRIVEN FROM 3705 SHOULD RANGE BETWEEN ±5V AND ± 15V
5. THIS INPUT FLOATS TO AN ACTIVE MST LEVEL OF - 1.5V
6. THE PINS ARE TIED TOGETHER IN THE HOUSING THAT ATTACHES TO THE 3705 TAIL GATE
PART NO
1785975
LOGIC PG NO
VA009
IBM
NAME
LINE SET I C START STOP
PAIR LOCAL ATTACH
DESIGN HB MAR72
DETAIL WFV MAR72
CHECK HB MAR72
APPRO HB MAR72
SHT OF
CLASSIFICATION
MUST CONFORM TO ENG SPEC
DEVELOPMENT NO
LOGIC PG NO
DATE
CHANGE NO
MAR 72 309540
MAY 72 309543
THIS DOCUMENT IS THE PROPERTY OF IBM. ITS USE IS RESTRICTED. IT IS AUTHORIZED ONLY FOR RESPONDING TO A REQUEST FOR QUOTATION OR FOR THE PERFORMANCE OF WORK FOR IBM. ALL QUESTIONS MUST BE REFERRED TO THE IBM PURCHASING DEPARTMENT.
6R0-0134 D MROF 7R0032800 VERTICAL ELECTRICAL FORMAT

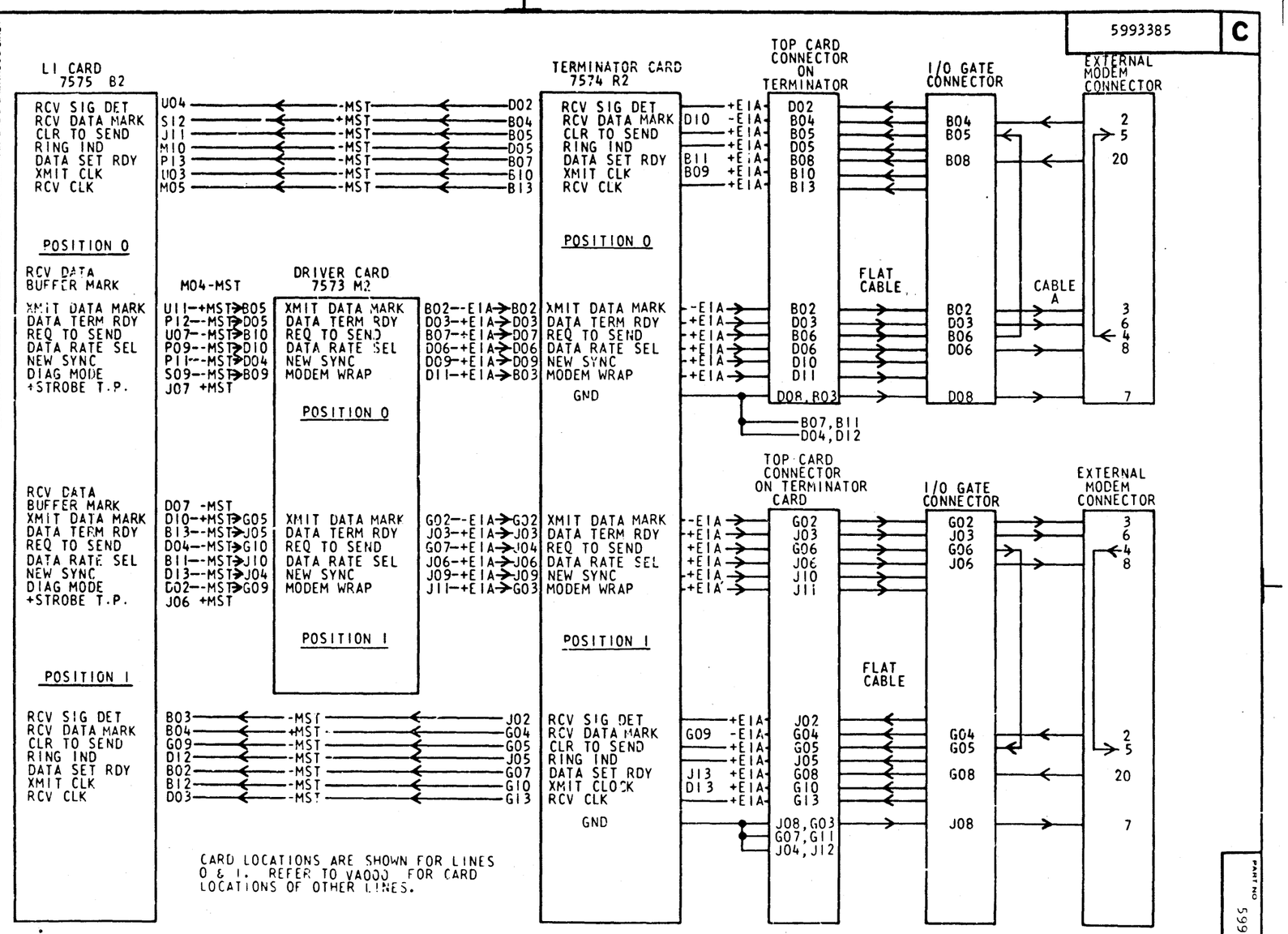

CARD LOCATIONS ARE SHOWN FOR LINES 0 & 1. REFER TO VA000 FOR CARD LOCATIONS OF OTHER LINES.

NOTES

1. LINE SET IF EXTERNAL MODEM CABLE P/N 5997529 CONNECTS FROM EXTERNAL MODEM TO I/O GATE
2. FLAT CABLE P/N 5997936 CONNECTS FROM I/O GATE TO TOP CARD CONNECTOR OF TERMINATOR CARD
3. EIA LEVELS +3V TO +25V=SPACE=CONTROL ON
   -3V TO -25V=MARK=CONTROL OFF
4. SIGNALS DRIVEN FROM 3705 SHOULD RANGE BETWEEN ±5V AND ±15V

PART NO 5993385

LOGIC PG NO VA010

IBM

NAME	LINE SET IF EIA SYNC			
LINE PAIR				
DESIGN	WZ	OCT71	SHT	OF
DETAIL	VR	OCT71		
CHECK	DD	JAN72	CLASSIFICATION	
APPRO	HB	JAN72		

DATE	CHANGE NO	DATE	CHANGE NO
JUN72	309543		
OCT72	309944		

MUST CONFORM TO ENG SPEC

DEVELOPMENT NO

LOGIC PG NO

C 5993385

THIS DOCUMENT IS THE PROPERTY OF IBM. ITS USE [redacted] IS AUTHORIZED ONLY FOR RESPONDING TO A REQUEST FOR QUOTATION OR FOR THE PERFORMANCE OF WORK FOR IBM. ALL QUESTIONS MUST BE REFERRED TO THE IBM PURCHASING DEPARTMENT.

THIS DOCUMENT IS THE PROPERTY OF IBM. ITS USE OR DISCLOSURE IS AUTHORIZED ONLY FOR RESPONDING TO A REQUEST FOR QUOTATION OR FOR THE PERFORMANCE OF WORK ON IBM. ALL QUESTIONS MUST BE REFERRED TO THE IBM PURCHASING DEPARTMENT.

1785994 C

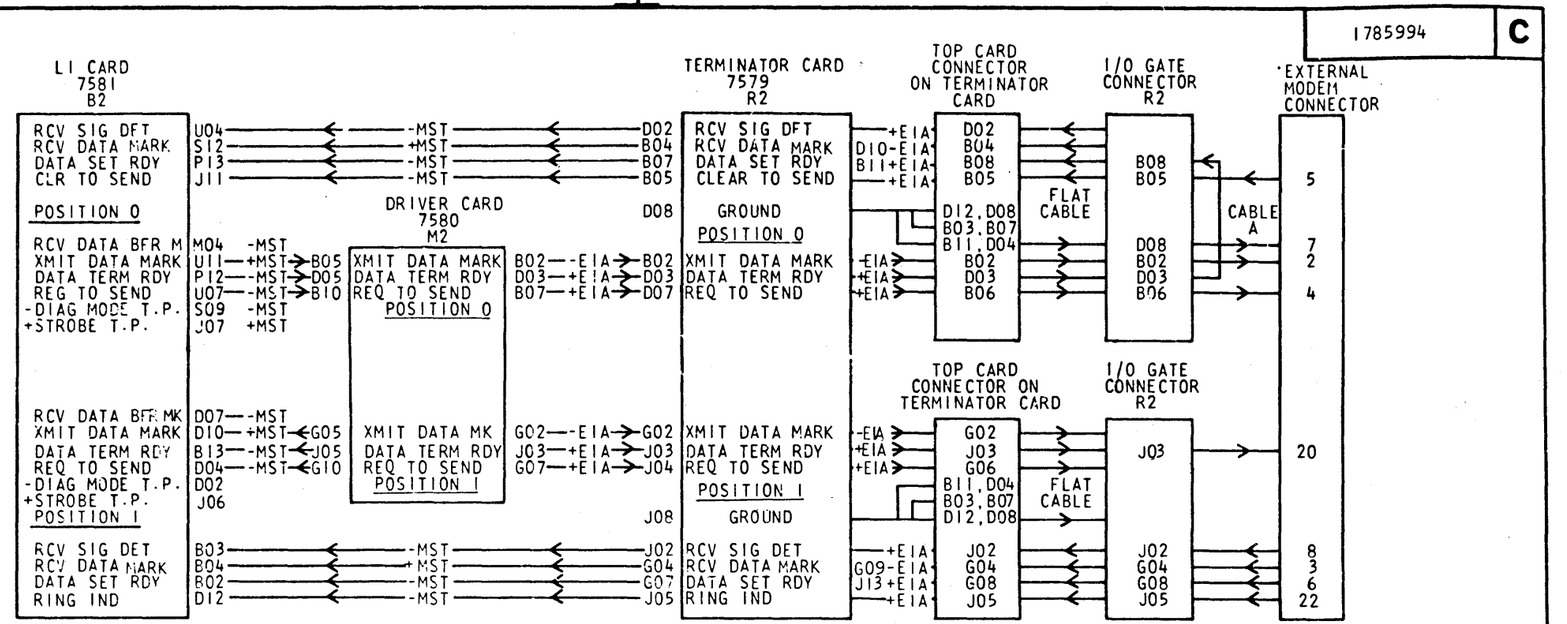

CARD LOCATIONS ARE SHOWN FOR LINES 0 & 1. REFER TO VA000 FOR CARD LOCATIONS OF OTHER LINES.

NOTES

1. XI BOARD WIRING CONNECTS ALL CARDS OF LINE PAIRS
2. FLAT CABLE P/N 5997936 CONNECTS FROM I/O GATE TO TOP CARD CONNECTOR OF TERMINATE CARD
3. EIA LEVELS +3V TO +25V=SPACE=CONTROL ON
   -3V TO -25V=MARK=CONTROL OFF
4. SIGNALS DRIVEN FROM 3705 SHOULD RANGE BETWEEN ±5V AND ±15V
5. LINE SET IB USES EXTERNAL MODEM CABLE P/N 5997489 TO CONNECT FROM EXTERNAL MODEM TO I/O GATE.

	NAME	DATE
DESIGN	WZ	OCT71
DETAIL	VR	OCT71
CHECK	DD	JAN72
APPRO	HB	JAN72

IBM

LINE SET IB LOW SPEED

DUPLEX

SHT OF

CLASSIFICATION

MUST CONFORM TO ENG SPEC

CHANGE NO	DATE
	JUN72
309543	NOV72
309955	

DEVELOPMENT NO

LOGIC PG NO

PART NO 1785994

LOGIC PG NO VA011

1785994 C

"THIS DOCUMENT IS THE PROPERTY OF IBM. ITS USE IS AUTHORIZED ONLY FOR RESPONDING TO A REQUEST FOR QUOTATION OR FOR THE PERFORMANCE OF WORK FOR IBM. ALL QUESTIONS MUST BE REFERRED TO THE IBM PURCHASING DEPARTMENT"

	NAME	DATE
DESIGN	DD	JUL72
DETAIL	VR	JUL72
CHECK		
APPRO		

IBM

LINE SET IH EIA SYNC

FULL DUPLEX LINE

SHT 1 OF 1

(LASH-CATION)

MUST CONFORM TO ENG SPEC

DEVELOPMENT NO

LOGIC PG NO VA012

CHANGE NO 309937 DATE FEB73

1851869 C

LI CARD 7575 B2		DRIVER CARD 7573 M2		TERMINATOR CARD 7574 R2	TOP CARD CONNECTOR ON TERMINATOR	I/O GATE CONNECTOR	EXTERNAL MODEM CONNECTOR
CLR TO SEND	J11 ←-MST←			CLR TO SEND	+EIA→ B05	B05	5
RING IND	M10 ←-MST←			RING IND	+EIA→ D05	D05	22
XMIT DATA SET RDY	P13 ←-MST←			XMIT DATA SET RDY	B11→+EIA→ B08	B08	
XMIT CLK	U03 ←-MST←			XMIT CLK	B09→+EIA→ B10	B10	15
XMIT DATA MARK	U11-+MST→ B05	XMIT DATA MARK	B02--EIA→ B02	XMIT DATA MARK	-EIA→ B02	B02	2
XMIT DATA TERM RDY	P12--MST→ D05	XMIT DATA TERM RDY	D03-+EIA→ D03	XMIT DATA TERM RDY	+EIA→ D03	D03	20
REQ TO SEND	U07--MST→ B10	REQ TO SEND	B07-+EIA→ D07	REQ TO SEND	+EIA→ B06	B06	4
DATA RATE SEL	P09--MST→ D10	DATA RATE SEL	D06-+EIA→ D06	DATA RATE SEL	+EIA→ D06	D06	23
NEW SYNC	P11--MST→ D04	NEW SYNC	D09-+EIA→ D09	NEW SYNC	+EIA→ D10	D10	14
DIAG MODE	S09--MST→ B09	MODEM WRAP	D11-+EIA→ B03	MODEM WRAP	+EIA→ D11	D11	18
+STROBE T.P.	J07 +MST			GND	D08, B03	D08	7
					B07, B11 J08, J04 J12		
					D04, D12 G03, G07 G11		
RCV DATA BUFFER MARK	D07 -MST						
RCV DATA TERM RDY	B13--MST→ J05	RCV DATA TERM RDY	J03-+EIA→ J03	RCV DATA TERM RDY	+EIA→ J03	J03	
RCV SIG DET	B03 ←-MST←		J02	RCV SIG DET	+EIA→ J02	J02	8
RCV DATA MARK	B04 ←+MST←		G04	RCV DATA MARK	G09 -EIA→ G04	G04	3
RCV DATA SET RDY	B02 ←-MST←		G07	RCV DATA SET RDY	J13 +EIA→ G08	G08	6
RCV CLK	D03 ←-MST←		G13	RCV CLK	+EIA→ G13	G13	17

FLAT CABLE

NOTE [5]

CARD LOCATIONS ARE SHOWN FOR LINE 0. REFER TO VA000 FOR CARD LOCATIONS OF OTHER LINES.

* NOTES

1. LINE SET IH EXTERNAL MODEM CABLE P/N 5997454 CONNECTS FROM EXTERNAL MODEM TO I/O GATE
2. FLAT CABLE P/N 5997936 CONNECTS FROM I/O GATE TO TOP CARD CONNECTOR OF TERMINATOR CARD
3. EIA LEVELS +3V TO +25V=SPACE=CONTROL ON -3V TO -25V=MARK=CONTROL OFF
4. SIGNALS DRIVEN FROM 3705 SHOULD RANGE BETWEEN ±5V AND ±15V
5. [5] B08 TO J03 JUMPERED TOGETHER EXTERNALLY IN MODEM CABLE

1851869 VA012

C 6981581

PART NO 1648395 | LOGIC PG NO VA013

1648395 C

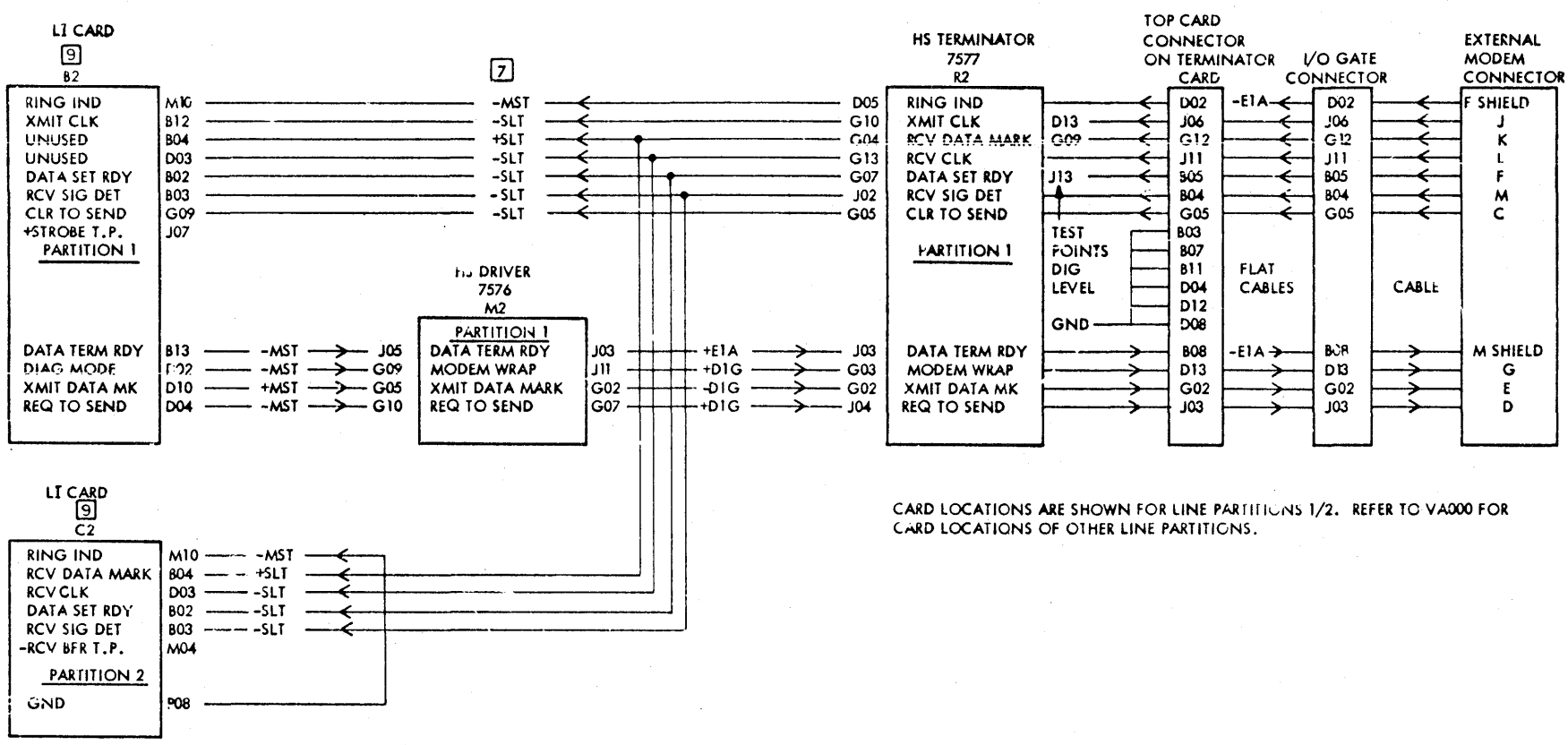

CARD LOCATIONS ARE SHOWN FOR LINE PARTITIONS 1/2. REFER TO VA000 FOR CARD LOCATIONS OF OTHER LINE PARTITIONS.

NOTES

1. X1 BOARD WIRING CONNECTS ALL CARDS OF LINE PAIR
2. EXTERNAL MODEM CABLE PN 5993201 CONNECTS FROM EXTERNAL MODEM TO I/O GATE
3. FLAT CABLE P/N 5997936 CONNECTS FROM I/O GATE TO TOP CARD CONNECTOR TO TERMINATE CARD
4. ONLY ONE DIGITAL LINE AVAILABLE PER LINE SET
5. DIGITAL LEVELS
   SPACE OR CONTROL ON = > 23 mA (+1V)
   MARK OR CONTROL OFF = < 5 mA (-.7V)
   OPEN CIRCUIT CONTROL OFF
6. E1A LEVELS
   SPACE OR CONTROL ON +3V TO +25V
   MARK OR CONTROL OFF - 3V TO -25V
7. SIGNALS DRIVEN FROM 3705 SHOULD RANGE BETWEEN ±5V AND ±15V
8. LEVELS

	+	-
MST	-0.6 TO -0.9V	-1.5V TO -2.3V
SLT	+3V NOM	0V NOM
E1A	+3V TO +25V	-3V TO -25V
DIGITAL	>23 mA	<5 mA

9. LINE INTERFACE CARD CODE
   IT 7606
   ITA CF77

LINE TYPE		LINE PARTITION	YELLOW WIRE BOARD JUMPERS				
IT	ITA	1/2	B2B04-C2B04	B2D03-C2D03	B2B02-C2B02	B2B03-C2B03	C2P03 C2M10
IT		3/4	D2B04-E2B04	D2D03-E2D03	D2B02-E2B02	D2B03-E2B03	E2P08-E2M10
IT		5/6	H2B04-J2B04	H2D03-J2D03	H2B02-J2B02	H2B03-J2B03	J2P08-J2M10
IT		7/8	K2B04-L2B04	K2D03-L2D03	K2B02-L2B02	K2B03-L2B03	L2P08-L2M10

"THIS DOCUMENT IS THE PROPERTY OF IBM. ITS USE IS AUTHORIZED ONLY FOR RESPONDING TO A REQUEST FOR QUOTATION OR FOR THE PERFORMANCE OF WORK FOR IBM. ALL QUESTIONS MUST BE REFERRED TO THE IBM PURCHASING DEPARTMENT.

IBM

NAME	LINE SET IT OR ITA HIGH SPEED		
	DIGITAL SYNC FULL DUPLEX		
DESIGN	RC	JAN76	SHT OF
DETAIL	RTS	JAN76	
CHECK			CLASSIFICATION
APPRO			

	DATE	CHANGE NO		DATE	CHANGE NO
	APR 76	315623			
	OCT 79	321755			

MUST CONFORM TO ENG SPEC	DEVELOPMENT NO	LOGIC PG NO
		VA013

1648395 C

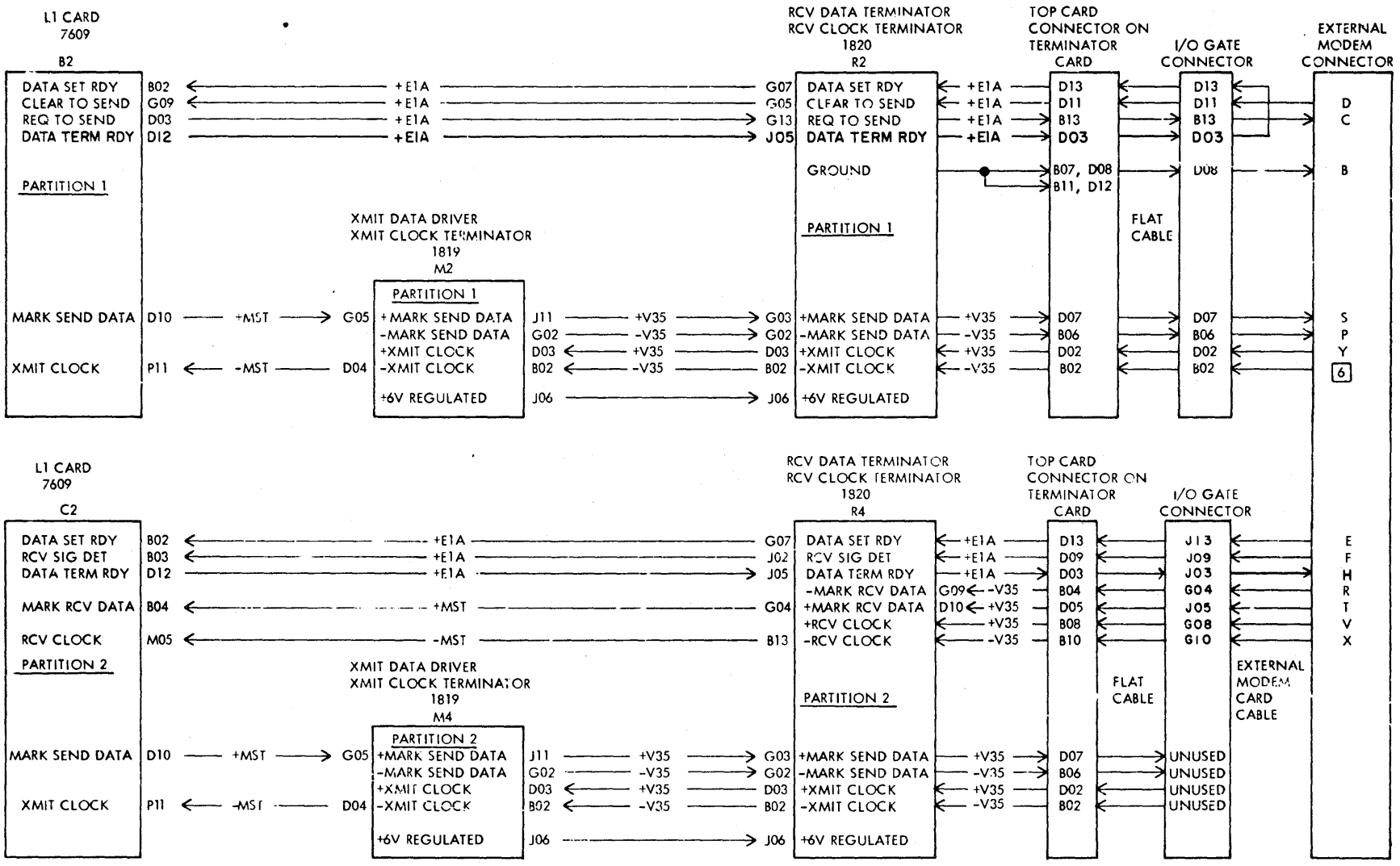

CARD LOCATIONS ARE SHOWN FOR LINE 0 (TRANSMIT) AND LINE 2 (RCV)
REFER TO VA000 FOR CARD LOCATIONS
OF OTHER LINES

NOTES

1 X1 BOARD WIRING CONNECTS ALL CARDS OF LINE PAIR

2 V35 DIFFERENTIAL VOLTAGE LEVELS REFERENCED TO SIGNAL GROUND:
MARK: -0.44V TO -0.66V
SPACE: +0.44V TO +0.66V

3 ONLY 1 V35 LINE AVAILABLE PER LINE SET

4 FLAT CABLE P/N 5997936 CONNECTS FORM I/O GATE TO TOP CARD CONNECTOR ON 1820 CARD.

5 CABLE P/N 1648394 CONNECTS FROM EXTERNAL MODEM TO I/O GATE EXTERNAL MODEM

[6] THIS PIN WILL BE LABELED "AA" OR "a". BOTH LABELS ARE CORRECT

"THIS DOCUMENT IS THE PROPERTY OF IBM. ITS USE IS AUTHORIZED ONLY FOR RESPONDING TO A REQUEST FOR QUOTATION OR FOR THE PERFORMANCE OF WORK FOR IBM. ALL QUESTIONS MUST BE REFERRED TO THE IBM PURCHASING DEPARTMENT"

IBM					DATE	CHANGE NO		DATE	CHANGE NO
NAME	LINE SET III V35 INTERFACE				APR 76	315623			
	FULL DUPLEX				JAN 77	316673			
DESIGN	RC	JAN76	SHT OF						
DETAIL	RTS	JAN76							
CHECK			APPLICATION	MUST CONFORM TO ENG SPEC	DEVELOPMENT NO		LOGIC PG NO		
APPRO							VA014		

THIS DOCUMENT IS THE PROPERTY OF IBM. ITS USE IS AUTHORIZED ONLY FOR RESPONDING TO AN IBM REQUEST FOR QUOTATION OR TO PERFORM WORK FOR IBM. ALL QUESTIONS MUST BE REFERRED TO THE IBM PURCHASING DEPARTMENT.

IBM

	NAME	DATE
APPRO		
CHECK		
DETAIL	TS APR78	APR 79
DESIGN		321372

1W LINESET FOR LOCAL ATTACH HALF DUPLEX V35 INTERFACE

SHT 1 OF 1

CLASSIFICATION: MUST CONFORM TO ENG SPEC

CHANGE NO	DATE
318570	APR78
321372	APR 79

DEVELOPMENT NO

LOGIC PG NO VA015

1752942 C

1752942 C

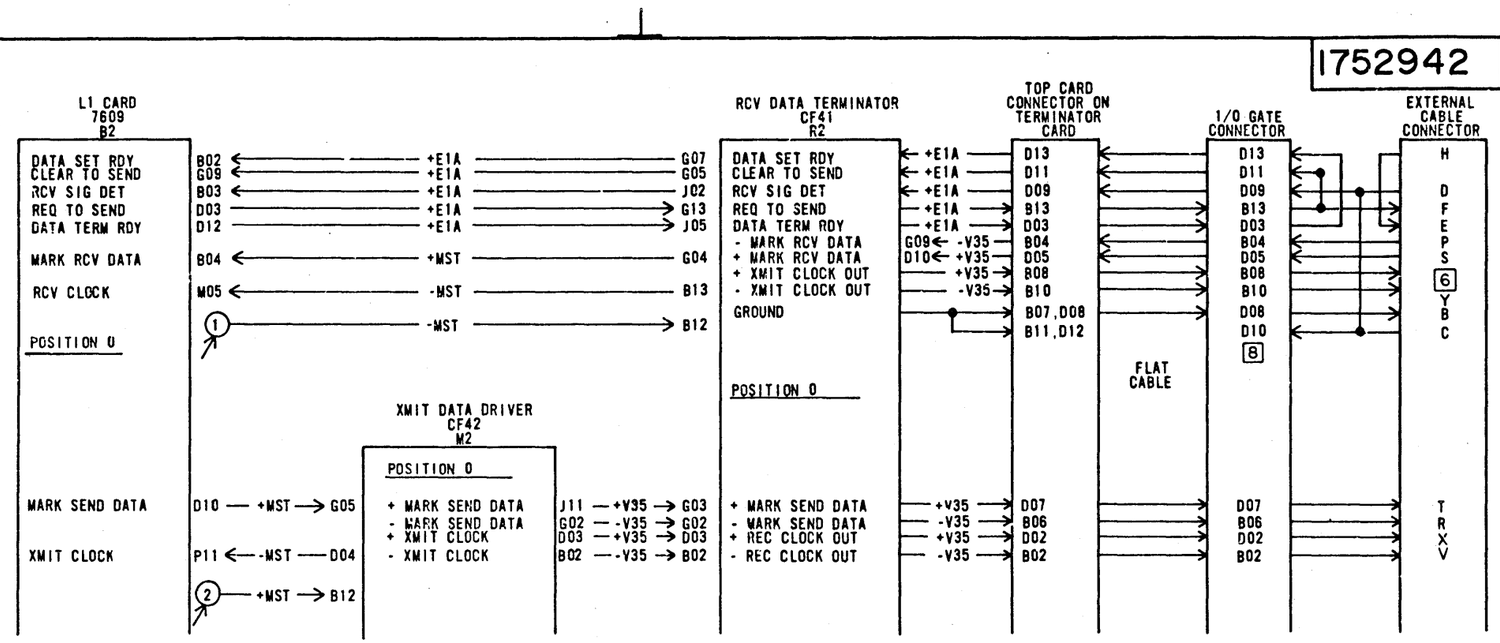

CARD LOCATIONS ARE SHOWN FOR LINE 0.
REFER TO VA000 FOR CARD LOCATIONS OF OTHER LINES.

NOTES

1. X1 BOARD WIRING CONNECTS ALL CARDS OF LINE PAIR.
2. V35 DIFFERENTIAL VOLTAGE LEVELS REFERENCED TO SIGNAL GROUND:
   MARK: -0.44V TO -0.66V
   SPACE: +0.44V TO +0.66V
3. ONLY 1 V35 LINE AVAILABLE PER LINE PAIR POSITION.
4. FLAT CABLE P/N 5997936 CONNECTS FROM I/O GATE TO TOP CARD CONNECTOR ON CF41 CARD.
5. CABLE P/N 1752941 CONNECTS FROM I/O GATE (TAILGATE) TO LOCAL 3705 OR TERMINAL.

[6] THIS PIN WILL BE LABELED "AA" OR "a". BOTH LABELS ARE CORRECT.

[7] THIS CLOCK CARD IS NOT A PART OF THE LINESET. IT IS ONLY BEING SHOWN HERE FOR REFERENCE PURPOSES.

[8] THIS PIN USED ONLY AS A TIE POINT

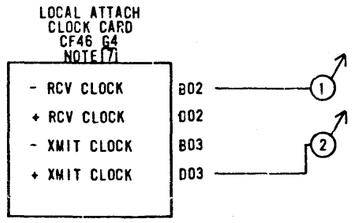

PART NO 1752942 C

LOGIC PG NO VA015

1752945 C

PART NO 1752945 | LOGIC PG NO VA016

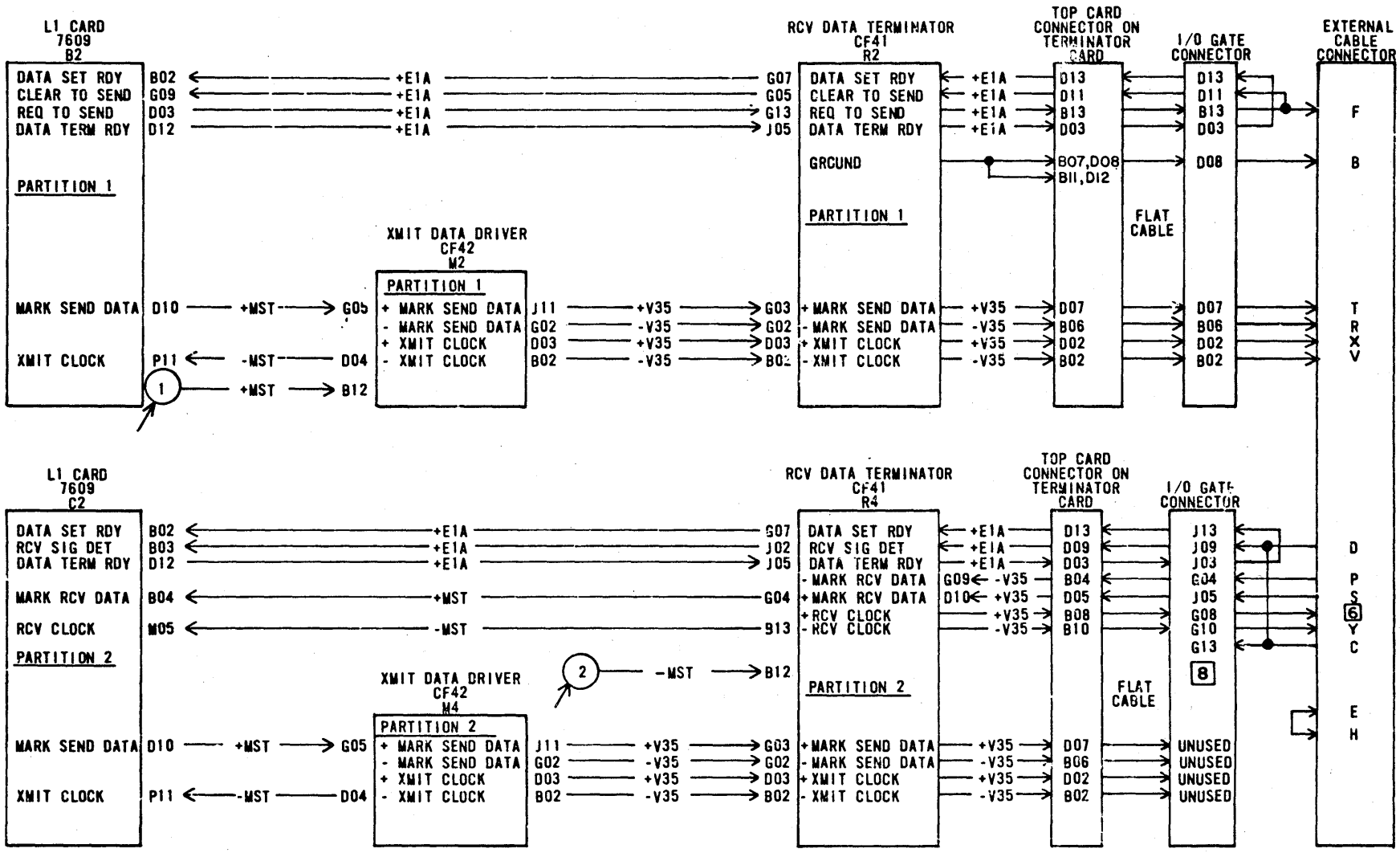

CARD LOCATIONS ARE SHOWN FOR LINE 0 (TRANSMIT) AND LINE 2 (RCV)
REFER TO VA000 FOR CARD LOCATIONS OF OTHER LINES

NOTES

1 X1 BOARD WIRING CONNECTS ALL CARDS OF LINE PAIR

2 V35 DIFFERENTIAL VOLTAGE LEVELS REFERENCED TO SIGNAL GROUND
MARK: -0.44V TO -0.66V
SPACE: +0.44V TO +0.66V

3 ONLY 1 V35 LINE AVAILABLE PER LINE SET

4 FLAT CABLE P/N 5997936 CONNECTS FORM I/O GATE TO TOP CARD CONNECTOR ON CF41 CARD.

5 CABLE P/N 1752944 CONNECTS FROM I/O GATE (TAILGATE) TO LOCAL 3705 OR TERMINAL.

[6] THIS PIN WILL BE LABLED "AA" OR "a". BOTH LABELS ARE CORRECT

[7] THIS CLOCK CARD IS NOT PART OF THE IZ LINE SET. IT IS ONLY SHOWN HERE FOR REFERENCE PURPOSES.

[9] THIS PIN USED ONLY AS A TIE POINT

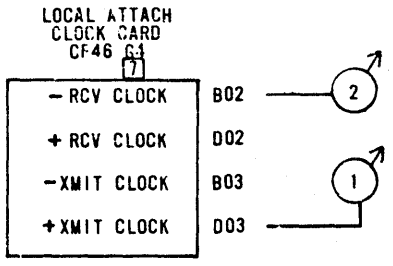

"THIS DOCUMENT IS THE PROPERTY OF IBM. ITS USE IS AUTHORIZED ONLY FOR RESPONDING TO A REQUEST FOR QUOTATION OR FOR THE PERFORMANCE OF WORK FOR IBM. ALL QUESTIONS MUST BE REFERRED TO THE IBM PURCHASING DEPARTMENT.

IBM					DATE	CHANGE NO		DATE	CHANGE NO
NAME	IZ LINE SET FOR LOCAL ATTACH FULL DUPLEX V35 INTERFACE				APR78	318570			
					APR79	321372			
DESIGN	HB	APR78	SHT 1 OF 1						
DETAIL	TS	APR78							
CHECK			CLASSIFICATION		MUST CONFORM TO ENG SPEC	DEVELOPMENT NO		LOGIC PG NO	
APPRO								VA016	

1752945 C

8549545 C

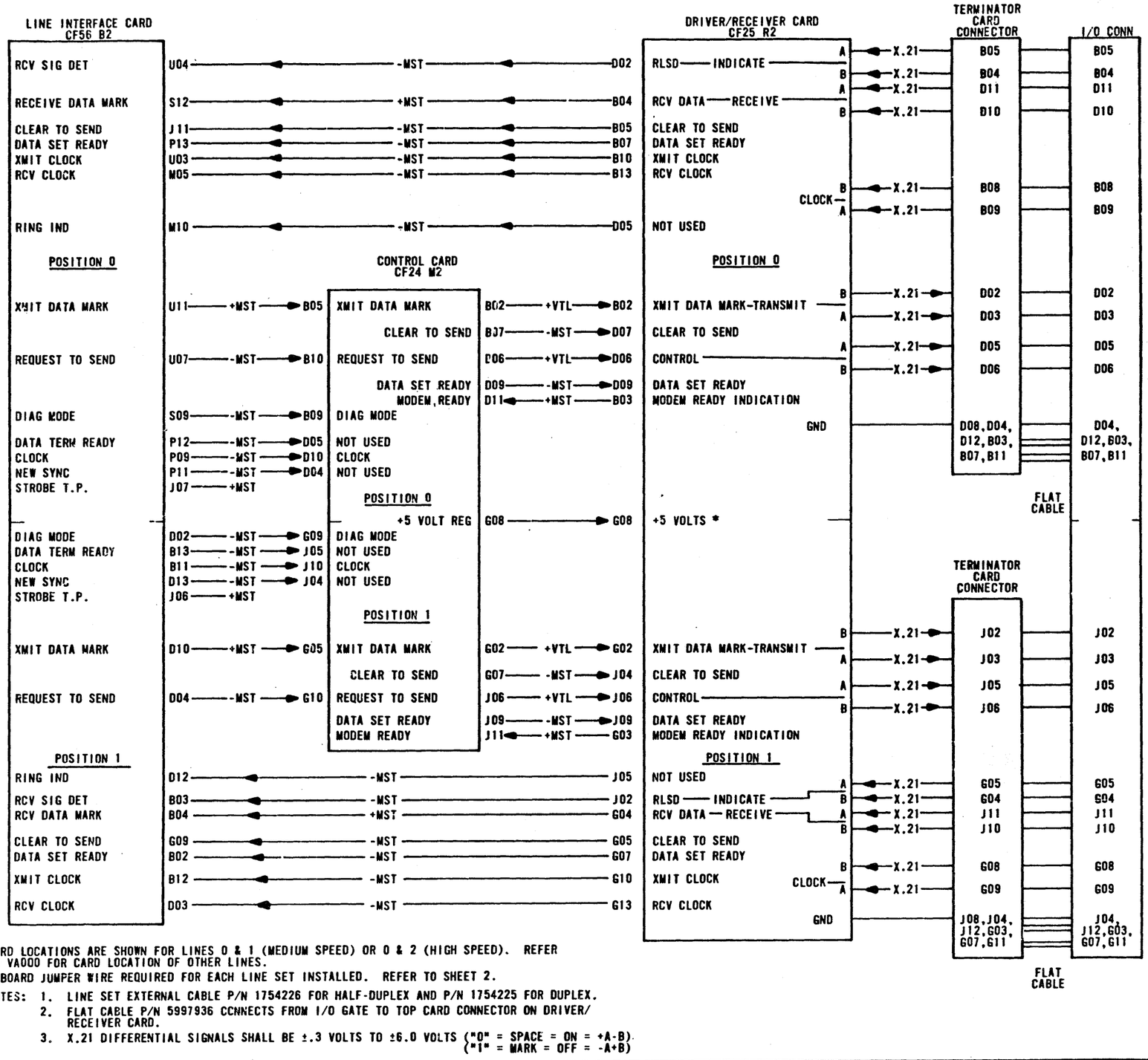

CARD LOCATIONS ARE SHOWN FOR LINES 0 & 1 (MEDIUM SPEED) OR 0 & 2 (HIGH SPEED). REFER TO VA000 FOR CARD LOCATION OF OTHER LINES.

* BOARD JUMPER WIRE REQUIRED FOR EACH LINE SET INSTALLED. REFER TO SHEET 2.

NOTES:
1. LINE SET EXTERNAL CABLE P/N 1754226 FOR HALF-DUPLEX AND P/N 1754225 FOR DUPLEX.
2. FLAT CABLE P/N 5997936 CONNECTS FROM I/O GATE TO TOP CARD CONNECTOR ON DRIVER/RECEIVER CARD.
3. X.21 DIFFERENTIAL SIGNALS SHALL BE ±.3 VOLTS TO ±6.0 VOLTS ("0" = SPACE = ON = +A-B) ("1" = MARK = OFF = -A+B)

PART NO 8549545

LOGIC PG NO VA017

SHEET 1 OF 2

"THIS DOCUMENT IS THE PROPERTY OF IBM. ITS USE IS AUTHORIZED ONLY FOR RESPONDING TO A REQUEST FOR QUOTATION OR FOR THE PERFORMANCE OF WORK FOR IBM. ALL QUESTIONS MUST BE REFERRED TO THE IBM PURCHASING DEPARTMENT.

IBM

NAME	X.21 LINE PAIR		
TYPE 1N/1R			
DESIGN	JJS	APR79	SHT 1 OF 2
DETAIL	TS	APR79	
CHECK	JJS	APR79	CLASSIFICATION
APPRO	CVD	APR79	JJS APR79

	DATE	CHANGE NO
	APR79	321371

MUST CONFORM TO ENG SPEC

DEVELOPMENT NO

LOGIC PG NO VA017

8549545 C

CARD JUMPERS:

CONTROL CARD

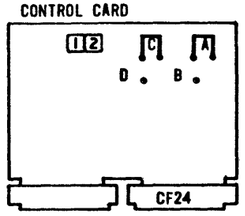

USE JUMPER P/N 816645

LINE INTERFACE CARD

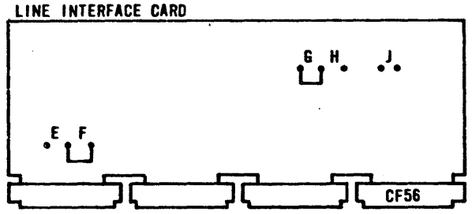

A - JUMPER FOR CTS DELAY (1ST ADDRESS OF PAIR)
B - JUMPER FOR NO CTS DELAY (1ST ADDRESS OF PAIR)
C - JUMPER FOR CTS DELAY (2ND ADDRESS OF PAIR)
D - JUMPER FOR NO CTS DELAY (2ND ADDRESS OF PAIR)

NOTES
[1] LINE SET TYPE IN (NON-SWITCHED): JUMPER A & C, AS SHOWN ABOVE UNLESS THE NETWORK ALLOWS IMMEDIATE DATA TRANSMISSION WITHOUT A CTS DELAY.
[2] LINE SET TYPE IR (SWITCHED): JUMPER B & D FOR A NO CTS DELAY. THE REQUIRED DELAY IS PROVIDED BY THE 3705 INTERNAL CLOCK TIMING.

E - JUMPER FOR HIGH SPEED (ABOVE 20K BPS)
F - JUMPER FOR MEDIUM SPEED (BELOW 20K BPS)
G - JUMPER FOR TYPE 1N, NON-SWITCHED (JUMPER G OR H, NOT BOTH)
H - JUMPER FOR TYPE 1R, SWITCHED
J - JUMPER FOR TYPE 1R, NO JUMPER FOR TYPE 1N

(JUMPERS SHOWN ABOVE ARE FOR MEDIUM SPEED, NON-SWITCHED OPERATION)

BOARD JUMPERS:

PARTITION 1	PARTITION 2 [1]	PARTITION 3	PARTITION 4 [1]	PARTITION 5	PARTITION 6 [1]	PARTITION 7	PARTITION 8 [1]
M2G08-R2G08	M2S08-R2S08	N2G08-S2G08	N2S08-S2S08	P2G08-T2G08	P2S08-T2S08	Q2G08-U2G08	Q2S08-U2S08

[1] NOT REQUIRED FOR HIGH SPEED LINES

THE FOLLOWING JUMPERS REQUIRED ONLY FOR HIGH SPEED LINES:

PARTITION 1/2	PARTITION 3/4	PARTITION 5/6	PARTITION 7/8
B2S05-C2M13	D2S05-E2M13	H2S05-J2M13	K2S05-L2M13

THIS DOCUMENT IS THE PROPERTY OF IBM. ITS USE IS AUTHORIZED ONLY FOR RESPONDING TO A REQUEST FOR QUOTATION OR FOR THE PERFORMANCE OF WORK FOR IBM. ALL QUESTIONS MUST BE REFERRED TO THE IBM PURCHASING DEPARTMENT.

IBM

	NAME	DATE
APPRO	FPN	APR79
CHECK	JJS	APR79
DETAIL	TS	APR79
DESIGN	JJS	APR79

X.21 LINE PAIR
TYPE IN/1R
SHT 2 OF 2

CLASSIFICATION: JJS APR79

MUST CONFORM TO ENG SPEC

DEVELOPMENT NO: 321371

LOGIC PG NO: VA017

CHANGE NO / DATE: APR79

VOLUME 007 MACHINE 3705- -0015984 MODEL E08 SYSTEM 0004XBW MODE BOX SHIP 82/12/30

LOGIC TYPE -0- SYSTEMS DIAGRAMS

PAGE NUM	SH	TITLE	PART NUM	EC NUM	FEATURE B/M OR B/MS
VA000		LIB TYPE-1 LINE SET	0005997898	344292	.W. 0001648398 .W. 0005997507
VA001		LOGIC L.I.B. TYPE 1	0005997899	315618	.W. 0005997507
VA002		LOGIC L.I.B. TYPE 1	0005997900	316667	.W. 0005997507
VA003		LOGIC L.I.B. TYPE 1	0005997901	309543	.W. 0005997507
VA004		LOGIC L.I.B. TYPE 1	0005997902	322670	.W. 0005997507
VA005		LOGIC L.I.B. TYPE 1	0005997903	316663	.W. 0005997507
VA006		LOGIC L.I.B. TYPE 1	0005997904	321755	.W. 0005997507
VA007		LOGIC L.I.B. TYPE 1	0005997905	309951	.W. 0005997507
VA008		LOGIC L.I.B. TYPE 1	0005997906	315618	.W. 0005997507
VA009		LOGIC L.I.B. TYPE 1	0001785975	309543	.W. 0005997507
VA010		LOGIC L.I.B. TYPE 1	0005993385	309944	.W. 0005997507
VA011		LOGIC L.I.B. TYPE 1	0001785994	309953	.W. 0005997507
VA012		LOGIC L.I.B. TYPE 1	0001851869	309937	.W. 0005997507
VA013		LOGIC L.I.B. TYPE 1	0001648395	321755	.W. 0005997507
VA014		LOGIC L.I.B. TYPE 1	0001648396	316673	.W. 0001648398 .W. 0005997507
VA015		LOGIC L.I.B. TYPE 1	0001752942	321372	.W. 0005997507
VA016		LOGIC L.I.B. TYPE 1	0001752945	321372	.W. 0005997507
VA017		LOGIC L.I.B. TYPE 1	0008549545	321371	.W. 0005997507
VA020		LOGIC L.I.B. TYPE 1	0001785400	315618	.W. 0005997507
VA021		LOGIC L.I.B. TYPE 1	0001785401	315618	.W. 0005997507
VA022		LOGIC L.I.B. TYPE 1	0001785402	315618	.W. 0005997507
VA023		LOGIC L.I.B. TYPE 1	0001785403	315618	.W. 0005997507
VA024		LOGIC L.I.B. TYPE 1	0001785404	309520	.W. 0005997507
VA025		LOGIC L.I.B. TYPE 1	0001785405	309520	.W. 0005997507
VA026		LOGIC L.I.B. TYPE 1	0001785406	309540	.W. 0005997507
VA031		LOGIC L.I.B. TYPE 1	0001785407	318570	.W. 0005997507
VA032		LOGIC L.I.B. TYPE 1	0001785408	318570	.W. 0005997507
VA041		LOGIC L.I.B. TYPE 1	0001785409	309540	.W. 0005997507
VA042		LOGIC L.I.B. TYPE 1	0001785410	309540	.W. 0005997507
VA043		LOGIC L.I.B. TYPE 1	0001785411	318570	.W. 0005997507
VA044		LOGIC L.I.B. TYPE 1	0001785412	309520	.W. 0005997507
VA045		LOGIC L.I.B. TYPE 1	0001785413	309520	.W. 0005997507
VA046		LOGIC L.I.B. TYPE 1	0001785414	309520	.W. 0005997507
VA047		LOGIC L.I.B. TYPE 1	0001785415	309520	.W. 0005997507
VA048		LOGIC L.I.B. TYPE 1	0001785416	318570	.W. 0005997507
VA049		LOGIC L.I.B. TYPE 1	0001785417	309540	.W. 0005997507
VA050		LOGIC L.I.B. TYPE 1	0001785418	318570	.W. 0005997507
VA060		LOGIC L.I.B. TYPE 1	0001785419	309540	.W. 0005997507
VA061		LOGIC L.I.B. TYPE 1	0001785420	309520	.W. 0005997507
VA062		LOGIC L.I.B. TYPE 1	0001785421	309520	.W. 0005997507
VA070		LINE SETS 1W-1Z	0001749538	318570	.W. 0005997507
VA071		LOGIC L.I.B. TYPE 1	0001749547	318570	.W. 0005997507

VOLUME 007 MACHINE 3705- -0015984 MODEL E08 SYSTEM 0004XBW MODE BOX SHIP 82/12/30

LOGIC TYPE -0- SYSTEMS DIAGRAMS

PAGE NUM	SH	TITLE	PART NUM	EC NUM	FEATURE B/M OR B/MS
VA081		LOGIC L.I.B. TYPE 1	0001785422	309520	.W. 0005997507
VA082		LOGIC L.I.B. TYPE 1	0001785423	309520	.W. 0005997507
VA100		LOGIC L.I.B. TYPE 1	0001785424	309520	.W. 0005997507
VA101		LOGIC L.I.B. TYPE 1	0001785425	309520	.W. 0005997507
VA102		LOGIC L.I.B. TYPE 1	0001785426	309520	.W. 0005997507
VA103		LOGIC L.I.B. TYPE 1	0001785427	311286	.W. 0005997507
VA104		LOGIC L.I.B. TYPE 1	0001785428	309520	.W. 0005997507
VA105		LOGIC L.I.B. TYPE 1	0001785429	311286	.W. 0005997507
VA106		LOGIC L.I.B. TYPE 1	0001785430	309520	.W. 0005997507
VA107		LOGIC L.I.B. TYPE 1	0001785431	309520	.W. 0005997507
VA109		LOGIC L.I.B. TYPE 1	0001785432	309520	.W. 0005997507
VA110		LOGIC L.I.B. TYPE 1	0001785433	309520	.W. 0005997507
VA111		LOGIC L.I.B. TYPE 1	0001785434	309520	.W. 0005997507
VA120		LOGIC L.I.B. TYPE 1	0001785435	309520	.W. 0005997507
VA121		LOGIC L.I.B. TYPE 1	0001785436	309520	.W. 0005997507
VA122		LOGIC L.I.B. TYPE 1	0001785437	309520	.W. 0005997507
VA123		LOGIC L.I.B. TYPE 1	0001785438	311286	.W. 0005997507
VA124		LOGIC L.I.B. TYPE 1	0001785439	309520	.W. 0005997507
VA125		LOGIC L.I.B. TYPE 1	0001785440	311286	.W. 0005997507
VA126		LOGIC L.I.B. TYPE 1	0001785441	309520	.W. 0005997507
VA127		LOGIC L.I.B. TYPE 1	0001785442	309520	.W. 0005997507
VA129		LOGIC L.I.B. TYPE 1	0001785443	309520	.W. 0005997507
VA130		LOGIC L.I.B. TYPE 1	0001785444	309520	.W. 0005997507
VA131		LOGIC L.I.B. TYPE 1	0001785445	309520	.W. 0005997507
VA140		LOGIC L.I.B. TYPE 1	0001785446	309520	.W. 0005997507
VA141		LOGIC L.I.B. TYPE 1	0001785447	309520	.W. 0005997507
VA142		LOGIC L.I.B. TYPE 1	0001785448	309520	.W. 0005997507
VA143		LOGIC L.I.B. TYPE 1	0001785449	311286	.W. 0005997507
VA144		LOGIC L.I.B. TYPE 1	0001785450	309520	.W. 0005997507
VA145		LOGIC L.I.B. TYPE 1	0001785451	311286	.W. 0005997507
VA146		LOGIC L.I.B. TYPE 1	0001785452	309520	.W. 0005997507
VA147		LOGIC L.I.B. TYPE 1	0001785453	309520	.W. 0005997507
VA149		LOGIC L.I.B. TYPE 1	0001785454	309520	.W. 0005997507
VA150		LOGIC L.I.B. TYPE 1	0001785455	309520	.W. 0005997507
VA151		LOGIC L.I.B. TYPE 1	0001785456	309520	.W. 0005997507
VA160		LOGIC L.I.B. TYPE 1	0001785457	309520	.W. 0005997507
VA161		LOGIC L.I.B. TYPE 1	0001785458	309520	.W. 0005997507
VA162		LOGIC L.I.B. TYPE 1	0001785459	309520	.W. 0005997507
VA163		LOGIC L.I.B. TYPE 1	0001785460	311286	.W. 0005997507
VA164		LOGIC L.I.B. TYPE 1	0001785461	309520	.W. 0005997507
VA165		LOGIC L.I.B. TYPE 1	0001785462	311286	.W. 0005997507
VA166		LOGIC L.I.B. TYPE 1	0001785463	309520	.W. 0005997507

VOLUME 007 MACHINE 3705- -0015984 MODEL E08 SYSTEM 0004XBW MODE BOX SHIP 82/12/30

LOGIC TYPE -0- SYSTEMS DIAGRAMS

PAGE NUM	SH	TITLE	PART NUM	EC NUM	FEATURE B/M OR B/MS
VA167		LOGIC L.I.B. TYPE 1	0001785464	309520	.W. 0005997507
VA169		LOGIC L.I.B. TYPE 1	0001785465	309520	.W. 0005997507
VA170		LOGIC L.I.B. TYPE 1	0001785466	309520	.W. 0005997507
VA171		LOGIC L.I.B. TYPE 1	0001785467	309520	.W. 0005997507
VA180		LOGIC L.I.B. TYPE 1	0001785468	309520	.W. 0005997507
VA181		LOGIC L.I.B. TYPE 1	0001785469	309520	.W. 0005997507
VA182		LOGIC L.I.B. TYPE 1	0001785470	309520	.W. 0005997507
VA183		LOGIC L.I.B. TYPE 1	0001785471	311286	.W. 0005997507
VA184		LOGIC L.I.B. TYPE 1	0001785472	309520	.W. 0005997507
VA185		LOGIC L.I.B. TYPE 1	0001785473	311286	.W. 0005997507
VA186		LOGIC L.I.B. TYPE 1	0001785474	309520	.W. 0005997507
VA187		LOGIC L.I.B. TYPE 1	0001785475	309520	.W. 0005997507
VA189		LOGIC L.I.B. TYPE 1	0001785476	309520	.W. 0005997507
VA190		LOGIC L.I.B. TYPE 1	0001785477	309520	.W. 0005997507
VA191		LOGIC L.I.B. TYPE 1	0001785478	309520	.W. 0005997507
VA200		LOGIC L.I.B. TYPE 1	0001785479	309520	.W. 0005997507
VA201		LOGIC L.I.B. TYPE 1	0001785480	309520	.W. 0005997507
VA202		LOGIC L.I.B. TYPE 1	0001785481	309520	.W. 0005997507
VA203		LOGIC L.I.B. TYPE 1	0001785482	311286	.W. 0005997507
VA204		LOGIC L.I.B. TYPE 1	0001785483	309520	.W. 0005997507
VA205		LOGIC L.I.B. TYPE 1	0001785484	311286	.W. 0005997507
VA206		LOGIC L.I.B. TYPE 1	0001785485	309520	.W. 0005997507
VA207		LOGIC L.I.B. TYPE 1	0001785486	309520	.W. 0005997507
VA209		LOGIC L.I.B. TYPE 1	0001785487	309520	.W. 0005997507
VA210		LOGIC L.I.B. TYPE 1	0001785488	309520	.W. 0005997507
VA211		LOGIC L.I.B. TYPE 1	0001785489	309520	.W. 0005997507
VA220		LOGIC L.I.B. TYPE 1	0001785490	309520	.W. 0005997507
VA221		LOGIC L.I.B. TYPE 1	0001785491	309520	.W. 0005997507
VA222		LOGIC L.I.B. TYPE 1	0001785492	309520	.W. 0005997507
VA223		LOGIC L.I.B. TYPE 1	0001785493	311286	.W. 0005997507
VA224		LOGIC L.I.B. TYPE 1	0001785494	309520	.W. 0005997507
VA225		LOGIC L.I.B. TYPE 1	0001785495	311286	.W. 0005997507
VA226		LOGIC L.I.B. TYPE 1	0001785496	309520	.W. 0005997507
VA227		LOGIC L.I.B. TYPE 1	0001785497	309520	.W. 0005997507
VA229		LOGIC L.I.B. TYPE 1	0001785498	309520	.W. 0005997507
VA230		LOGIC L.I.B. TYPE 1	0001785499	309520	.W. 0005997507
VA231		LOGIC L.I.B. TYPE 1	0001785500	309520	.W. 0005997507
VA240		LOGIC L.I.B. TYPE 1	0001785501	309520	.W. 0005997507
VA241		LOGIC L.I.B. TYPE 1	0001785502	309520	.W. 0005997507
VA242		LOGIC L.I.B. TYPE 1	0001785503	309540	.W. 0005997507
VA243		LOGIC L.I.B. TYPE 1	0001785504	311286	.W. 0005997507
VA244		LOGIC L.I.B. TYPE 1	0001785505	309520	.W. 0005997507

VOLUME 007 MACHINE 3705- -0015984 MODEL E08 SYSTEM 0004XBW MODE BOX SHIP 82/12/30

LOGIC TYPE -0- SYSTEMS DIAGRAMS

PAGE NUM	SH	TITLE	PART NUM	EC NUM	FEATURE B/M OR B/MS
VA245		LOGIC L.I.B. TYPE 1	0001785506	311286	.W. 0005997507
VA246		LOGIC L.I.B. TYPE 1	0001785507	309540	.W. 0005997507
VA247		LOGIC L.I.B. TYPE 1	0001785508	309520	.W. 0005997507
VA249		LOGIC L.I.B. TYPE 1	0001785509	309520	.W. 0005997507
VA250		LOGIC L.I.B. TYPE 1	0001785510	309520	.W. 0005997507
VA251		LOGIC L.I.B. TYPE 1	0001785511	309520	.W. 0005997507

TOTAL PART NUMBERS THIS VOLUME 132

CSB CABLE 1

+ LIB ACTIVE IN	019	*ENTR*		VA049	+ LIB ACTIVE IN — DB1
+ XMIT OSC 1	020			VA022	+ INTERNAL TRANSMIT OSC 1 (VA031) — DB3
+ XMIT OSC 2	021			VA022	+ INTERNAL TRANSMIT OSC 2 (VA031) — DB5
+ XMIT OSC 3	022	4B — DB		VA022	+ INTERNAL TRANSMIT OSC 3 (VA031) — DB7
+ RECEIVE OSC 0	023	*ENTR*		VA022	+ INTERNAL RECEIVE OSC 0 (VA042) — DC2
+ RECEIVE OSC 1	024			VA022	+ INTERNAL RECEIVE OSC 1 (VA042) — DC4
+ RECEIVE OSC 2	025	4C — DC		VA022	+ INTERNAL RECEIVE OSC 2 (VA042) — DC6
SPARE	026	*ENTR*			SPARE — DD1
SPARE	027				SPARE — DD3
+ LIB ACTIVE FEEDTHRU	028			VA022	+ LIB ACTIVE FEEDTHRU — DD5
+ BCC SEL 4	029	4D — DD		VA022	+ BCC SELECT 1 (VA041 VA081) — DD7
+ BCC SEL 8	030	*ENTR*		VA022	+ BCC SELECT 3 (VA041 VA081) — DE2
+ BCC READ	031			VA022	+ BCC READ (VA041 VA081) — DE4
- BCC WRITE	032	4E — DE		VA022	- BCC WRITE (VA041 VA081) — DE6
+ CSB CONTROL OUT A	033	*ENTR*		VA022	+ CONTROL OUT A (VA032 VA081) — DF1
+ CSB CONTROL OUT B	034			VA022	+ CONTROL OUT B (VA032 VA081) — DF3
+ TEST DATA MARK	035			VA022	+ TEST DATA MARK (VA032) — DF5
+ RESET BIT SERVICE	036	4F — DF		VA022	+ RESET BIT SERVICE (VA032 VA081) — DF7

CSB CABLE 2

+ INTERNAL TRANSMIT OSC 0 — VA022DH1	*EXIT* TO LIBS		+ XMIT OSC 0 — DH1
+ AUTO CALL PRESENT — VA021DM4			+ AUTO CALL PRESENT — DH3
+ INTERNAL RECEIVE OSC 3 — VA022DH5			+ RECEIVE OSC 3 — DH5
+ LOCAL STORE PARITY ERROR 3 — VA022DH7	4H — DH		+ LOCAL STORE PARITY ERROR 3 — DH7
+ LIB ADDRESS ERROR — VA062DK4	*EXIT* TO LIBS		+ LIB ADDRESS ERROR — DJ2
+ LOCAL STORE PARITY ERROR 1 — VA062DL4			+ LOCAL STORE PARITY ERROR 1 — DJ4
+ CSB DATA IN 1 — VA021BG4	4J — DJ		+ CSB DATA IN 1 — DJ6
+ CSB DATA IN 2 — VA021BJ4	*EXIT* TO LIBS		+ CSB DATA IN 2 — DK1
+ CSB DATA IN 3 — VA021BL4			+ CSB DATA IN 3 — DK3
+ LOCAL STORE PARITY ERROR 2 — VA022DK5			+ LOCAL STORE PARITY ERROR 2 — DK5
+ LOCAL STORE PARITY ERROR 4 — VA022DK7	4K — DK		+ LOCAL STORE PARITY ERROR 4 — DK7
+ BIT OVERRUN RST — VA022DL2	*EXIT* TO LIBS		+ BIT OVERRUN RST — DL2
+ BCC SELECT 1 — VA022DL4			+ BCC SELECT 1 — DL4
+ CSB DATA IN 7 — VA062DM4	4L — DL		+ CSB DATA IN 7 — DL6
+ CSB DATA IN 4 — VA021BN4	*EXIT* TO LIBS		+ CSB DATA IN 4 — DM1
+ CSB DATA IN 5 — VA021DH4			+ CSB DATA IN 5 — DM3
+ CSB DATA IN 6 — VA021DK4			+ CSB DATA IN 6 — DM5
+ BCC SELECT 2 — VA022DM7	4M — DM		+ BCC SELECT 2 — DM7

NOTE. CABLES 1-3 MAY BE TRACED ON PAGES VA001 V AND VA002. TYPE 1 AND A 2CS SOURCE/SINK POINTS O ARE RA060/RA061/RA062 2 OR TA001◊TA002◊TA003 FOR O CABLES 1-3 RESPECTIVELY. TYPE 3CS SOURCE/SINK 000TD060◊TD070◊TD080.

DB1 X-X1A6D04 DC4 X-X1C6R04 01X-X1A1D11 DF1 X-X1C6A02
DB3 X-X1B6A04 01X-X1C1A13 DD7 X-X1A6E02 01X-X1C1A11
01X-X1B1A13 DC6 X-X1C6B04 01X-X1A1E11 DF3 X-X1C6B02
DB5 X-X1B6B04 01X-X1C1B13 DE2 X-X1B6B02 01X-X1C1B11
01X-X1B1B13 DD1 X-X1C6D04 01X-X1B1B11 DF5 X-X1C6C02
DB7 X-X1B6C04 01X-X1C1D13 DE4 X-X1B6C02 01X-X1C1C11
01X-X1B1C13 DD3 X-X1C6E04 01X-X1B1C11 DF7 X-X1C6E02
DC2 X-X1B6E04 01X-X1C1E13 DE6 X-X1B6D02 01X-X1C1E11
01X-X1B1E13 DD5 X-X1A6D02 01X-X1B1D11

01-26-72 309520C
05-11-72 309543
06-07-76 315618

CSB - LIB INTERFACE	
DATE 06-30-76 MACH. 27RNB	V A O 2 0 000
LOG 811 FRAME 01	
W.A. BARKER P.N. 1785400	
IBM CORP. SDD BLK. DN	

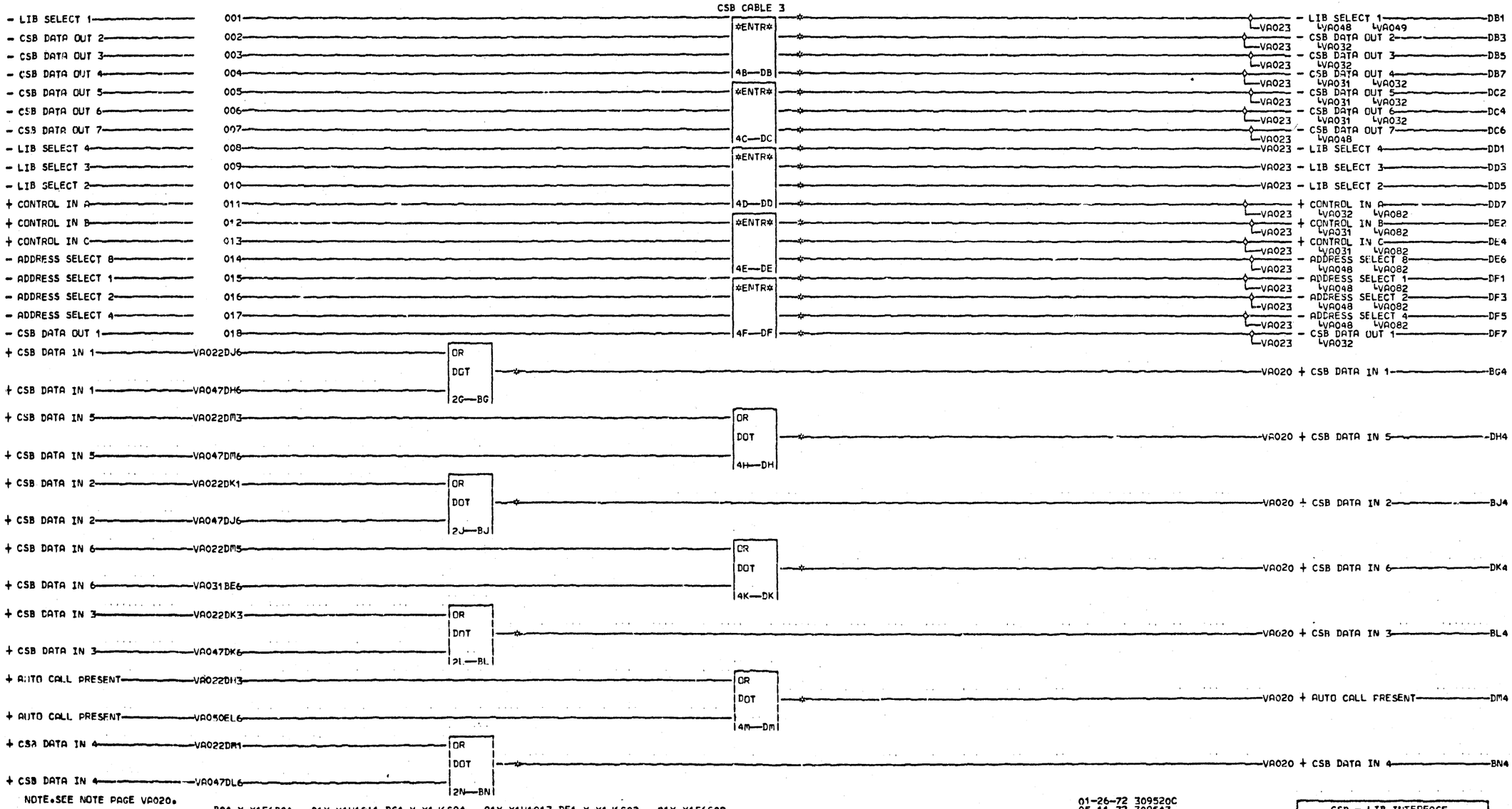

NOTE.SEE NOTE PAGE VA020.

BG4 X-X1E6B04 01X-X1H1A11 DC4 X-X1J6C04 01X-X1H1A13 DF1 X-X1J6C02 01X-X1F6C02
01X-X1E1B13 DB3 X-X1H6C04 01X-X1J1C13 DD7 X-X1H6B02 01X-X1J1C11 DK4 X-X1F1D11
BJ4 X-X1E6C04 01X-X1H1C13 DC6 X-X1J6D04 01X-X1H1B11 DF3 X-X1J6D02 01X-X1F6D02
01X-X1E1C13 DB5 X-X1H6D04 01X-X1J1D13 DE2 X-X1H6D02 01X-X1J1D11 DM4 X-X1F6C04
BL4 X-X1E6D04 01X-X1H1D13 DD1 X-X1H6A02 01X-X1H1D11 DF5 X-X1J6E02 01X-X1F1C13
01X-X1E1D13 DB7 X-X1H6E04 01X-X1K1B13 DE4 X-X1H6E02 01X-X1J1E11
BN4 X-X1F1B11 01X-X1H1E13 DD3 X-X1K6B04 01X-X1H1E11 DF7 X-X1K6B02
01X-X1F6B02 DC2 X-X1J6B04 01X-X1K1A13 DE6 X-X1J6A02 01X-X1K1B11
DB1 X-X1H6A04 01X-X1J1B13 DD5 X-X1K6A04 01X-X1J1A11 DH4 X-X1F1C11

01-26-72 309520C
05-11-72 309543
06-07-76 315618

CSB - LIB INTERFACE	
DATE 06-30-76 MACH. 27RNB	VA021
LOG 747 FRAME 01	000
W.A. BARKER P.N. 1785401	
IBM CORP. SDD BLK. DN	

CSB CABLE 1

+ LIB ACTIVE OUT	VA049FM6	*EXIT* TO LIBS 4B—DB	+ LIB ACTIVE OUT	DB1
+ INTERNAL TRANSMIT OSC 1	VA020DB3		+ INTERNAL TRANSMIT OSC 1	DB3
+ INTERNAL TRANSMIT OSC 2	VA020DB5		+ INTERNAL TRANSMIT OSC 2	DB5
+ INTERNAL TRANSMIT OSC 3	VA020DB7		+ INTERNAL TRANSMIT OSC 3	DB7
+ INTERNAL RECEIVE OSC 0	VA020DC2	*EXIT* TO LIBS 4C—DC	+ INTERNAL RECEIVE OSC 0	DC2
+ INTERNAL RECEIVE OSC 1	VA020DC4		+ INTERNAL RECEIVE OSC 1	DC4
+ INTERNAL RECEIVE OSC 2	VA020DC6		+ INTERNAL RECEIVE OSC 2	DC6
SPARE	023		SPARE	DD1
SPARE	024	*EXIT* TO LIBS 4D—DD	SPARE	DD3
+ LIB ACTIVE FEEDTHRU	VA020DD5		+ LIB ACTIVE FEEDTHRU	DD5
+ BCC SELECT 4	VA020DD7		+ BCC SELECT 4	DD7
+ BCC SELECT 8	VA020DE2	*EXIT* TO LIBS 4E—DE	+ BCC SELECT 8	DE2
+ BCC READ	VA020DE4		+ BCC READ	DE4
- BCC WRITE	VA020DE6		- BCC WRITE	DE6
+ CONTROL OUT A	VA020DF1	*EXIT* TO LIBS 4F—DF	+ CONTROL OUT A	DF1
+ CONTROL OUT B	VA020DF3		+ CONTROL OUT B	DF3
+ TEST DATA MARK	VA020DF5		+ TEST DATA MARK	DF5
+ RESET BIT SERVICE	VA020DF7		+ RESET BIT SERVICE	DF7

CSB CABLE 2

+ XMIT OSC 0	025	*ENTR* 4H—DH	+ INTERNAL TRANSMIT OSC 0	DH1
+ AUTO CALL PRESENT	026		+ AUTO CALL PRESENT	DH3
+ RECEIVE OSC 3	027		+ INTERNAL RECEIVE OSC 3	DH5
+ LOCAL STORE PARITY ERROR 2	028		+ LOCAL STORE PARITY ERROR 3	DH7
+ LIB ADDRESS ERROR	029	*ENTR* 4J—DJ	+ LIB ADDRESS ERROR	DJ2
+ LOCAL STORE PARITY ERROR 4	030		+ LOCAL STORE PARITY ERROR 1	DJ4
+ CSB DATA 1	031		+ CSB DATA IN 1	DJ6
+ CSB DATA 2	032	*ENTR* 4K—DK	+ CSB DATA IN 2	DK1
+ CSB DATA 3	033		+ CSB DATA IN 3	DK3
+ LOCAL STORE PARITY ERROR 1	034		+ LOCAL STORE PARITY ERROR 2	DK5
+ LOCAL STORE PARITY ERROR 3	035		+ LOCAL STORE PARITY ERROR 4	DK7
+ BIT OVERRUN RST	036	*ENTR* 4L—DL	+ BIT OVERRUN RST	DL2
+ BCC SELECT 1	037		+ BCC SELECT 1	DL4
+ CSB DATA IN 7	038		+ CSB DATA IN 7	DL6
+ CSB DATA IN 4	039	*ENTR* 4M—DM	+ CSB DATA IN 4	DM1
+ CSB DATA IN 5	100		+ CSB DATA IN 5	DM3
+ CSB DATA IN 6	101		+ CSB DATA IN 6	DM5
+ BCC SELECT 2	102		+ BCC SELECT 2	DM7

VA020 VA031
VA020 VA021
VA020 VA042
VA020 VA020
VA062
VA062
VA021
VA021
VA021
VA020
VA020
VA020 VA050
VA020 VA041 VA081
VA062
VA021
VA021
VA021
VA020 VA041 VA082

NOTE.SEE NOTE PAGE VA020.

VA0222 000

DH1 X-X1F6B04 01X-X1G1A13
01X-X1F1A13 DL2 X-X1E1C11
DH5 X-X1F6A02 01X-X1E6C02
01X-X1E1A11 DL4 X-X1E1D11
DH7 X-X1G6A04 01X-X1E6D02
01X-X1F1E13 DM7 X-X1G1A11
DK5 X-X1F6E04 01X-X1G6A02
01X-X1D1E13
DK7 X-X1D6E02

01-26-72 309520C
05-11-72 309543
06-07-76 315618

CSB - LIB INTERFACE

DATE 06-30-76 MACH. 27RNB
LOG 811 FRAME 01
W.A. BARKER P.N. 1785402
IBM CORP. SDD BLK. DN

VA0222 000

CSB CABLE 3

- LIB SELECT 2	VA021DD5	*EXIT* TO LIBS 4B—DB	- LIB SELECT 1	DB1
- CSB DATA OUT 2	VA021DB3		- CSB DATA OUT 2	DB3
- CSB DATA OUT 3	VA021DB5		- CSB DATA OUT 3	DB5
- CSB DATA OUT 4	VA021DB7		- CSB DATA OUT 4	DB7
- CSB DATA OUT 5	VA021DC2	*EXIT* TO LIBS 4C—DC	- CSB DATA OUT 5	DC2
- CSB DATA OUT 6	VA021DC4		- CSB DATA OUT 6	DC4
- CSB DATA OUT 7	VA021DC6		- CSB DATA OUT 7	DC6
- LIB SELECT 1	VA021DB1	*EXIT* TO LIBS 4D—DD	- LIB SELECT 4	DD1
- LIB SELECT 4	VA021DD1		- LIB SELECT 3	DD3
- LIB SELECT 3	VA021DD3		- LIB SELECT 2	DD5
+ CONTROL IN A	VA021DD7		+ CONTROL IN A	DD7
+ CONTROL IN B	VA021DE2	*EXIT* TO LIBS 4E—DE	+ CONTROL IN B	DE2
+ CONTROL IN C	VA021DE4		+ CONTROL IN C	DE4
- ADDRESS SELECT 8	VA021DE6		- ADDRESS SELECT 8	DE6
- ADDRESS SELECT 1	VA021DF1	*EXIT* TO LIBS 4F—DF	- ADDRESS SELECT 1	DF1
- ADDRESS SELECT 2	VA021DF3		- ADDRESS SELECT 2	DF3
- ADDRESS SELECT 4	VA021DF5		- ADDRESS SELECT 4	DF5
- CSB DATA OUT 1	VA021DF7		- CSB DATA OUT 1	DF7

NOTE.SEE NOTE PAGE VA020.

VA023 000

01-26-72 309520C
05-05-72 309543
06-07-76 315618

CSB — LIB INTERFACE			VA023
DATE 06-30-76 MACH. 27RNB			
LOG 747 FRAME 01			000
W.A. BARKER P.N. 1785403			
IBM CORP.	SDD BLK.	DG	

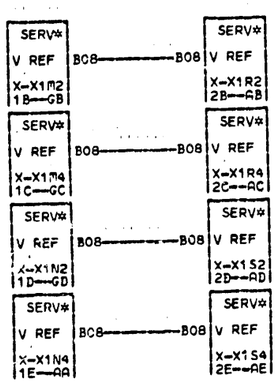

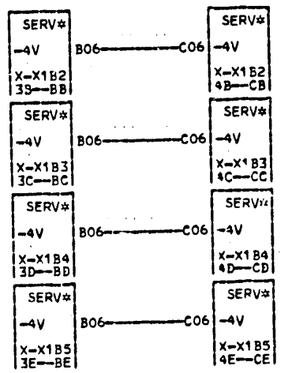

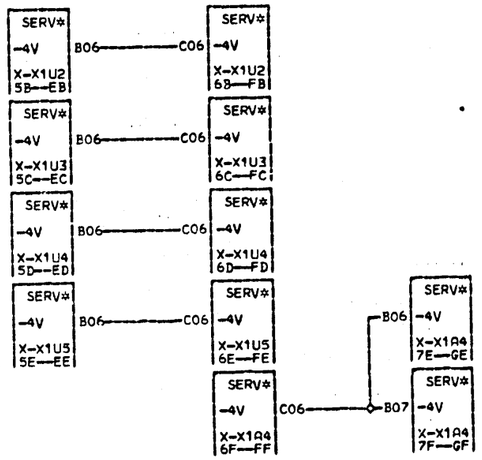

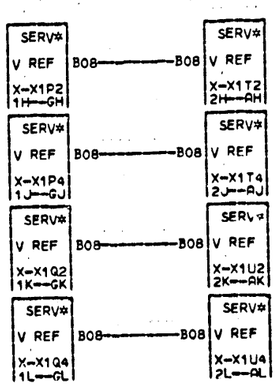

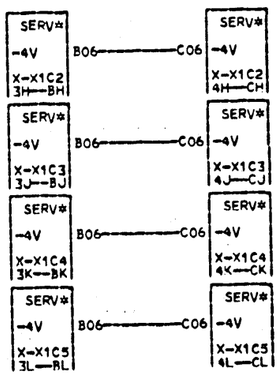

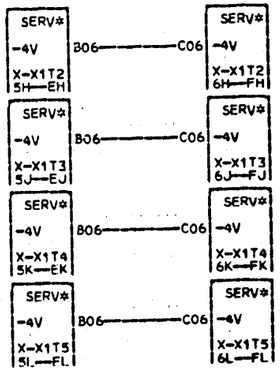

01-26-72 309520C

SERVICE VOLTAGES
DATE 01-26-72 MACH. 27RNB
LOG 600 FRAME 01
P.N. 1785404
IBM CORP. SDD BLK. MR

VA024 000

VA024 000

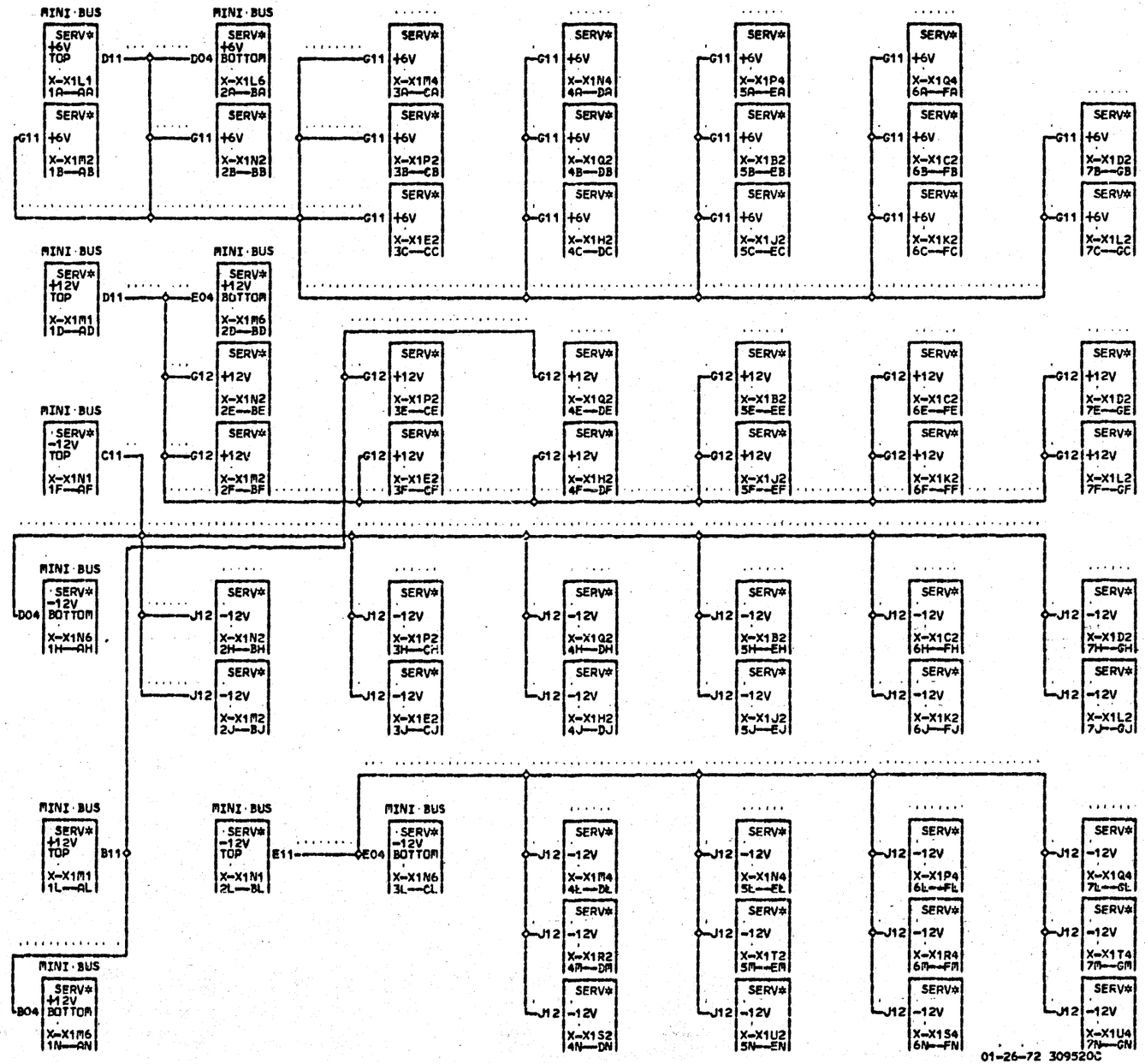

01-26-72 3095200

* JUMPER FROM LAMINAR BUS
* TO MINI BUS WILL BE AT
* TOP OR BOTTOM OF BOARD
* BUT NOT BOTH.

VA025 000

SERVICE PAGE

DATE 01-26-72 MACH. 27RN8

LOG 600 FRAME 01

P.N. 1785405

IBM CORP. SDD BLK. GP

VA025 000

000 VA026

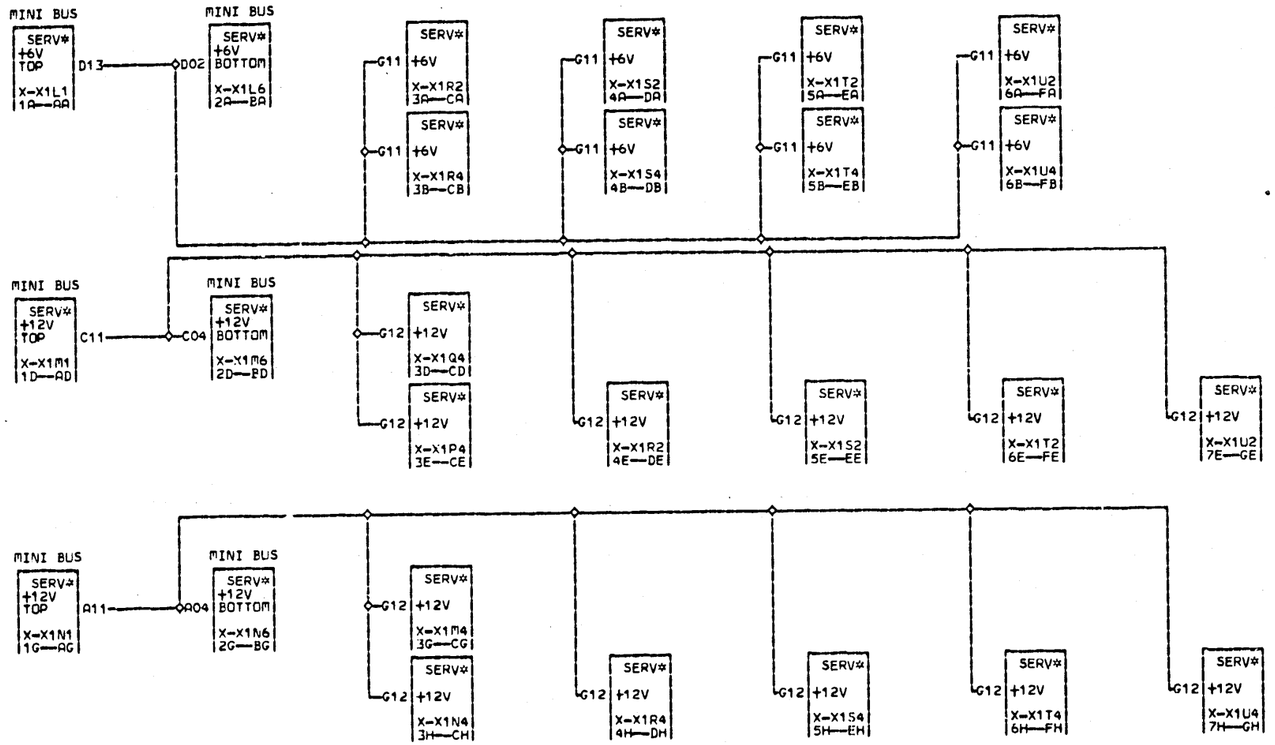

*JUMPER FROM LAMINAR BUS
*TO MINI BUS WILL BE AT
*TOP OR BOTTOM OF BOARD
*BUT NOT BOTH.

VA026 000

01-26-72 309520C
03-10-72 309540

SERVICE PAGE				
DATE	04-06-72	MACH.	27RNB	
LOG	255	FRAME	01	
		P.N.	1785406	
IBM CORP.	SDD	BLK.	GJ	

VA026 000

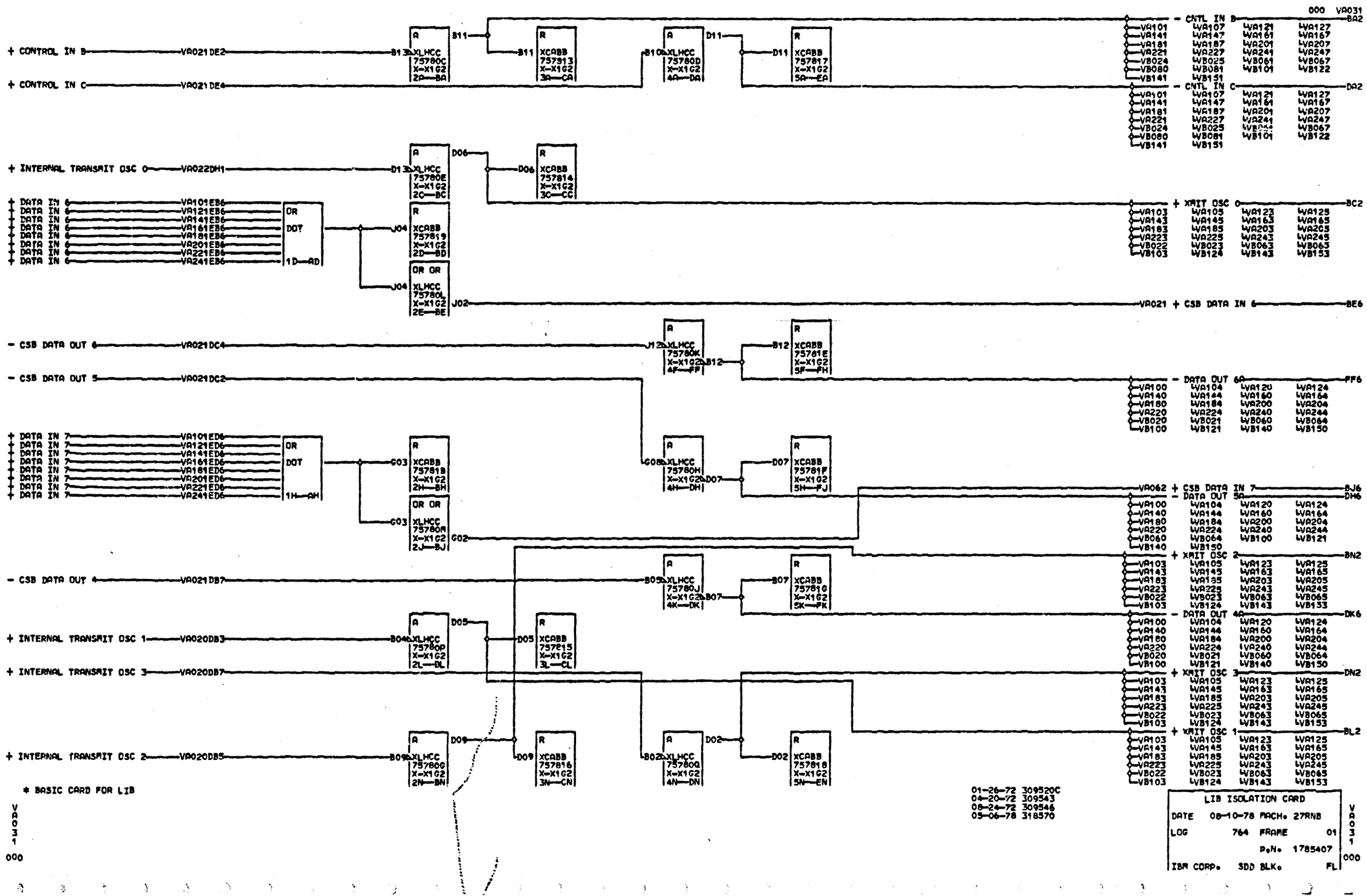
+ CONTROL IN B — VA021 DE2 — B13
+ CONTROL IN C — VA021 DE4
A XLHCC 75780C X-X1G2 2P—BA
R XCABB 757813 X-X1G2 3P—CA
B11
A XLHCC 75780D X-X1G2 4A—DA
R XCABB 757817 X-X1G2 5A—EA
B10
D11
- CNTL IN B — 000 VA031 — BA2
- CNTL IN C — DA2
VA101 VA107 VA121 VA127
VA141 VA147 VA161 VA167
VA181 VA187 VA201 VA207
VA221 VA227 VA241 VA247
VB024 VB025 VB061 VB067
VB080 VB081 VB101 VB122
VB141 VB151
+ INTERNAL TRANSMIT OSC 0 — VA022DH1 — D13
A XLHCC 75780E X-X1G2 2C—BC
R XCABB 757814 X-X1G2 3C—CC
D06
+ XMIT OSC 0 — BC2
VA103 VA105 VA123 VA125
VA143 VA145 VA163 VA165
VA183 VA185 VA203 VA205
VA223 VA225 VA243 VA245
VB022 VB023 VB063 VB065
VB103 VB124 VB143 VB153
+ DATA IN 6 — VA101 EB6
+ DATA IN 6 — VA121 EB6
+ DATA IN 6 — VA141 EB6
+ DATA IN 6 — VA161 EB6
+ DATA IN 6 — VA181 EB6
+ DATA IN 6 — VA201 EB6
+ DATA IN 6 — VA221 EB6
+ DATA IN 6 — VA241 EB6
OR
DOT
1D—AD
J04
R XCABB 757819 X-X1G2 2D—BD
OR OR XLHCC 75780L X-X1G2 2E—BE
J02
VA021 + CSB DATA IN 6 — BE6
- CSB DATA OUT 6 — VA021 DC4 — J12
A XLHCC 75780K X-X1G2 4F—FP
R XCABB 75781E X-X1G2 5F—FH
B12
- DATA OUT 6 — FF6
VA100 VA104 VA120 VA124
VA140 VA144 VA160 VA164
VA180 VA184 VA200 VA204
VA220 VA224 VA240 VA244
VB020 VB021 VB060 VB064
VB100 VB121 VB140 VB150
- CSB DATA OUT 5 — VA021 DC2
+ DATA IN 7 — VA101 ED6
+ DATA IN 7 — VA121 ED6
+ DATA IN 7 — VA141 ED6
+ DATA IN 7 — VA161 ED6
+ DATA IN 7 — VA181 ED6
+ DATA IN 7 — VA201 ED6
+ DATA IN 7 — VA221 ED6
+ DATA IN 7 — VA241 ED6
OR
DOT
1H—AH
G03
R XCABB 75781B X-X1G2 2H—BH
OR OR XLHCC 75780M X-X1G2 2J—BJ
G02
A XLHCC 75780H X-X1G2 4H—DH
R XCABB 75781F X-X1G2 5H—FJ
G08
D07
VA062 + CSB DATA IN 7 — BJ6
- DATA OUT 5 — DH6
VA100 VA104 VA120 VA124
VA140 VA144 VA160 VA164
VA180 VA184 VA200 VA204
VA220 VA224 VA240 VA244
VB060 VB064 VB100 VB121
VB140 VB150
- CSB DATA OUT 4 — VA021 DB7 — B05
A XLHCC 75780J X-X1G2 4K—DK
R XCABB 75781G X-X1G2 5K—FK
B07
+ XMIT OSC 2 — BN2
- DATA OUT 4 — DK6
VA103 VA105 VA123 VA125
VA143 VA145 VA163 VA165
VA183 VA185 VA203 VA205
VA223 VA225 VA243 VA245
VB022 VB023 VB063 VB065
VB103 VB124 VB143 VB153
+ INTERNAL TRANSMIT OSC 1 — VA020DB3 — B04
A XLHCC 75780P X-X1G2 2L—BL
R XCABB 757815 X-X1G2 3L—CL
D05
+ INTERNAL TRANSMIT OSC 3 — VA020DB7
+ XMIT OSC 3 — DN2
+ INTERNAL TRANSMIT OSC 2 — VA020DB5 — B09
A XLHCC 75780G X-X1G2 2N—BN
R XCABB 757816 X-X1G2 3N—CN
D09
A XLHCC 75780Q X-X1G2 4N—DN
R XCABB 757818 X-X1G2 5N—EN
B02
D02
+ XMIT OSC 1 — BL2
* BASIC CARD FOR LIB
VA031 000
01-26-72 309520C
04-20-72 309543
08-24-72 309546
05-06-78 318570
LIB ISOLATION CARD
DATE 08-10-78 MACH. 27RNB
LOG 764 FRAME 01
P.N. 1785407
IBM CORP. SDD BLK. FL
VA031 000

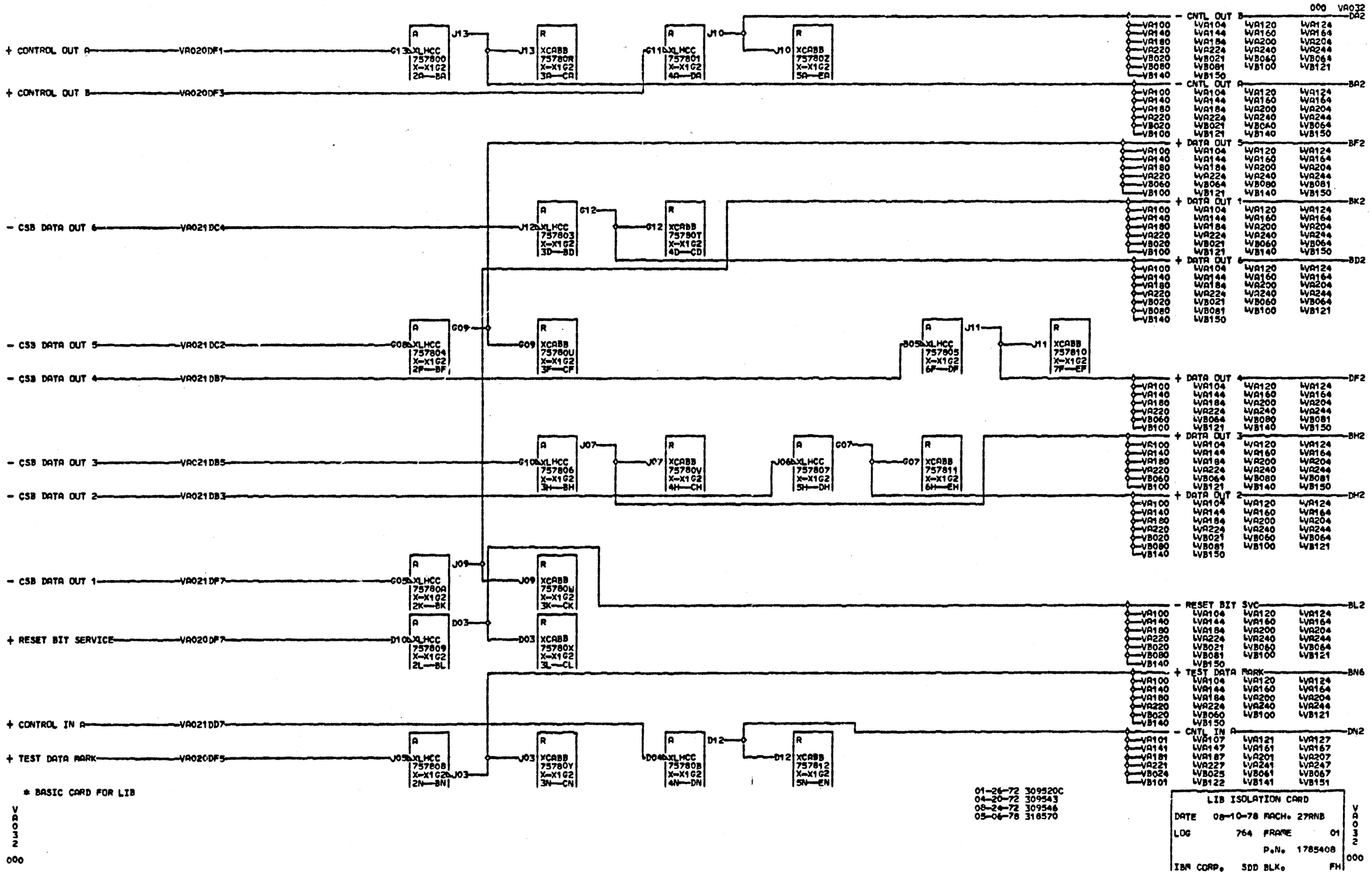
000 VA032
+ CONTROL OUT A — VA020DF1 — G13 — J13 — J13 — G11 — J10 — J10
+ CONTROL OUT B — VA020DF3
- CSB DATA OUT 6 — VA021DC4 — J12 — G12 — G12
- CSB DATA OUT 5 — VA021DC2 — G08 — G09 — G09 — B05 — J11 — J11
- CSB DATA OUT 4 — VA021DB7
- CSB DATA OUT 3 — VAC21DB5 — G10 — J07 — J07 — J06 — G07 — G07
- CSB DATA OUT 2 — VA021DB3
- CSB DATA OUT 1 — VA021DF7 — G05 — J09 — J09
+ RESET BIT SERVICE — VA020DF7 — D10 — D03 — D03
+ CONTROL IN A — VA021DD7
+ TEST DATA MARK — VA020DF5 — J05 — J03 — J03 — D04 — D12 — D12
A XLHCC 757800 X-X1G2 2A—BA
R XCABB 75780R X-X1G2 3A—CA
A XLHCC 757801 X-X1G2 4A—DA
R XCABB 75780Z X-X1G2 5A—EA
A XLHCC 757803 X-X1G2 3D—BD
R XCABB 75780T X-X1G2 4D—CD
A XLHCC 757804 X-X1G2 2F—BF
R XCABB 75780U X-X1G2 3F—CF
A XLHCC 757805 X-X1G2 6F—DF
R XCABB 757810 X-X1G2 7F—EF
A XLHCC 757806 X-X1G2 3H—BH
R XCABB 75780V X-X1G2 4H—CH
A XLHCC 757807 X-X1G2 5H—DH
R XCABB 757811 X-X1G2 6H—EH
A XLHCC 75780A X-X1G2 2K—BK
R XCABB 75780W X-X1G2 3K—CK
A XLHCC 757809 X-X1G2 2L—BL
R XCABB 75780X X-X1G2 3L—CL
A XLHCC 757808 X-X1G2 2N—BN
R XCABB 75780Y X-X1G2 3N—CN
A XLHCC 75780B X-X1G2 4N—DN
R XCABB 757812 X-X1G2 5N—EN
- CNTL OUT B — DA2
- CNTL OUT A — BA2
+ DATA OUT 5 — BF2
+ DATA OUT 1 — BK2
+ DATA OUT 6 — BD2
+ DATA OUT 4 — DF2
+ DATA OUT 3 — BH2
+ DATA OUT 2 — DH2
- RESET BIT SVC — BL2
+ TEST DATA MARK — BN6
- CNTL IN A — DN2
VA100 VA104 VA120 VA124
VA140 VA144 VA160 VA164
VA180 VA184 VA200 VA204
VA220 VA224 VA240 VA244
VB020 VB021 VB060 VB064
VB080 VB081 VB100 VB121
VB140 VB150
VA101 VA107 VA121 VA127
VA141 VA147 VA161 VA167
VA181 VA187 VA201 VA207
VA221 VA227 VA241 VA247
VB024 VB025 VB061 VB067
VB101 VB122 VB141 VB151
* BASIC CARD FOR LIB
VA032 000
01-26-72 309520C
04-20-72 309543
08-24-72 309546
05-06-78 316570
LIB ISOLATION CARD
DATE 08-10-78 MACH. 27RNB
LOG 764 FRAME 01
P.N. 1785408
IBM CORP. SDD BLK. FH
VA032 000

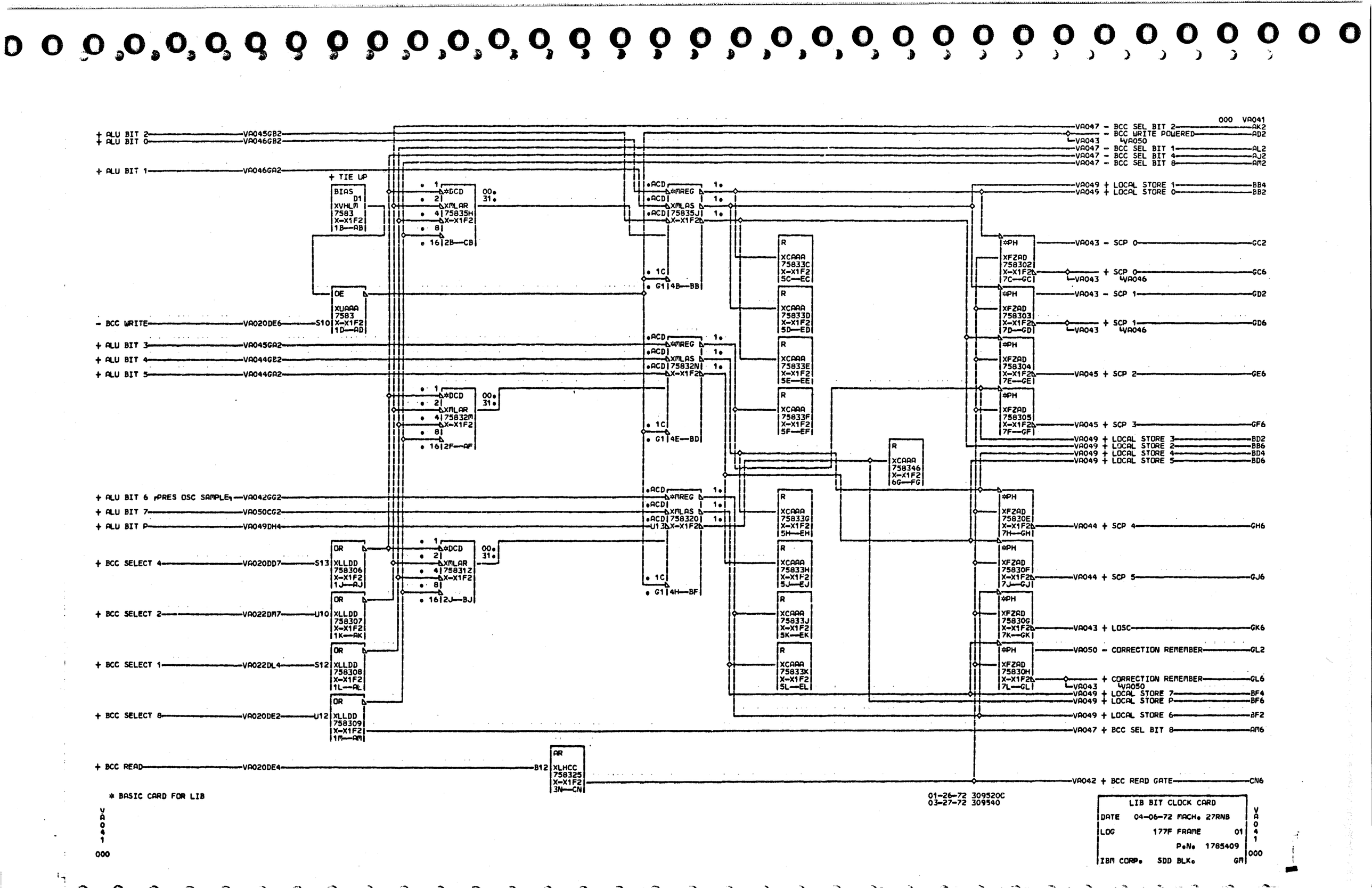

000 VA041
+ ALU BIT 2 VA045GB2
+ ALU BIT 0 VA046GB2
+ ALU BIT 1 VA046GA2
+ TIE UP
BIAS D1 XVHLM 7583 X-X1F2 1B—AB
OE XUAAA 7583 X-X1F2 1D—AD
- BCC WRITE VA020DE6 S10
+ ALU BIT 3 VA045GA2
+ ALU BIT 4 VA044GB2
+ ALU BIT 5 VA044GA2
+ ALU BIT 6 PRES OSC SAMPLE VA042GG2
+ ALU BIT 7 VA050CG2
+ ALU BIT P VA049DH4
+ BCC SELECT 4 VA020DD7 S13
+ BCC SELECT 2 VA022DM7 U10
+ BCC SELECT 1 VA022DL4 S12
+ BCC SELECT 8 VA020DE2 U12
+ BCC READ VA020DE4 B12
VA047 - BCC SEL BIT 2 AK2
VA047 - BCC WRITE POWERED AD2
VA043 VA050
VA047 - BCC SEL BIT 1 AL2
VA047 - BCC SEL BIT 4 AJ2
VA047 - BCC SEL BIT 8 AM2
VA049 + LOCAL STORE 1 BB4
VA049 + LOCAL STORE 0 BB2
VA043 - SCP 0 GC2
VA043 + SCP 0 GC6
VA043 VA046
VA043 - SCP 1 GD2
VA043 + SCP 1 GD6
VA045 + SCP 2 GE6
VA045 + SCP 3 GF6
VA049 + LOCAL STORE 3 BD2
VA049 + LOCAL STORE 2 BB6
VA049 + LOCAL STORE 4 BD4
VA049 + LOCAL STORE 5 BD6
VA044 + SCP 4 GH6
VA044 + SCP 5 GJ6
VA043 + LOSC GK6
VA050 - CORRECTION REMEMBER GL2
VA043 + CORRECTION REMEMBER GL6
VA049 + LOCAL STORE 7 BF4
VA049 + LOCAL STORE P BF6
VA049 + LOCAL STORE 6 BF2
VA047 + BCC SEL BIT 8 AM6
VA042 + BCC READ GATE CN6
* BASIC CARD FOR LIB
01-26-72 309520C
03-27-72 309540
LIB BIT CLOCK CARD
DATE 04-06-72 MACH. 27RNB
LOG 177F FRAME 01
P.N. 1785409
IBM CORP. SDD BLK. GM
VA041 000

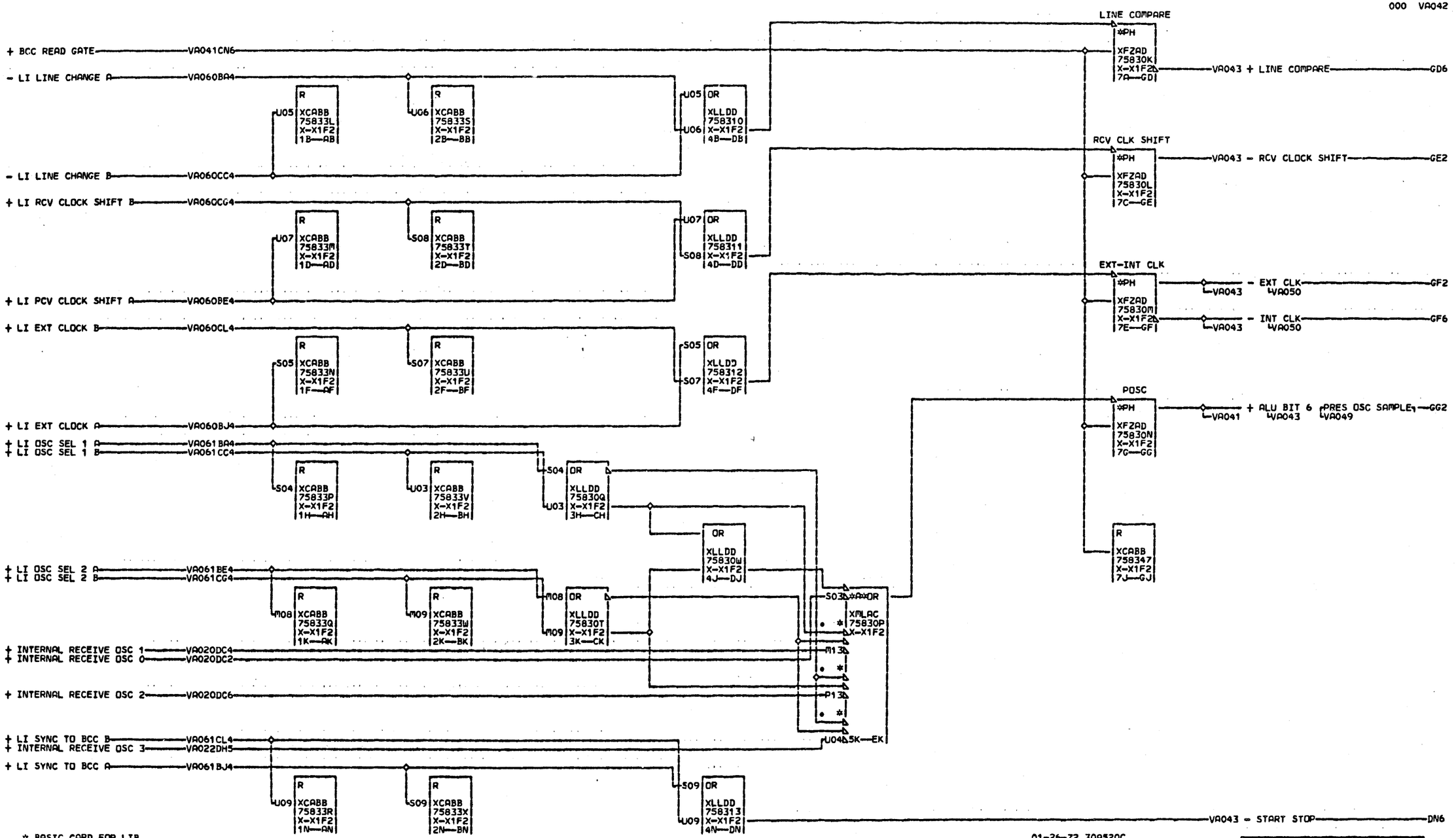

* BASIC CARD FOR LIB

01-26-72 309520C
03-10-72 309540

LIB BIT CLOCK CARD				
DATE	04-06-72	MACH. 27RNB		
LOC	255	FRAME	01	
		P.N.	1785410	
IBM CORP.	SDD BLK.		GM	

VA042 000

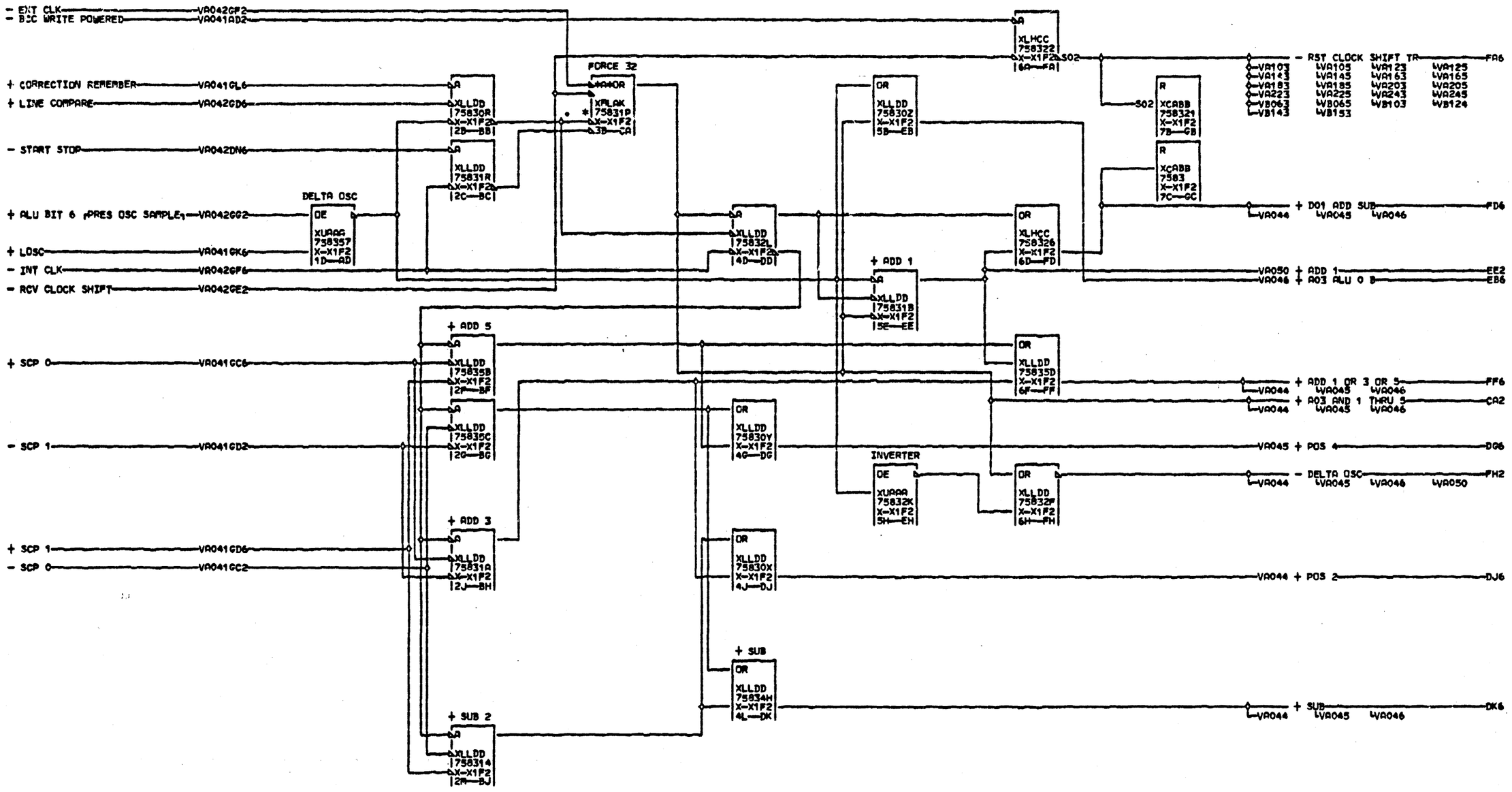

* BASIC CARD FOR LIB

VA043 000

01-26-72 309520C
03-29-72 309540
04-20-72 309543
08-24-72 309546
05-06-78 318570

LIB BIT CLOCK CARD
DATE 08-10-78 MACH. 27RNB
LOG 764 FRAME 01
P.N. 1785411
IBM CORP. SDD BLK. GK

VA043 000

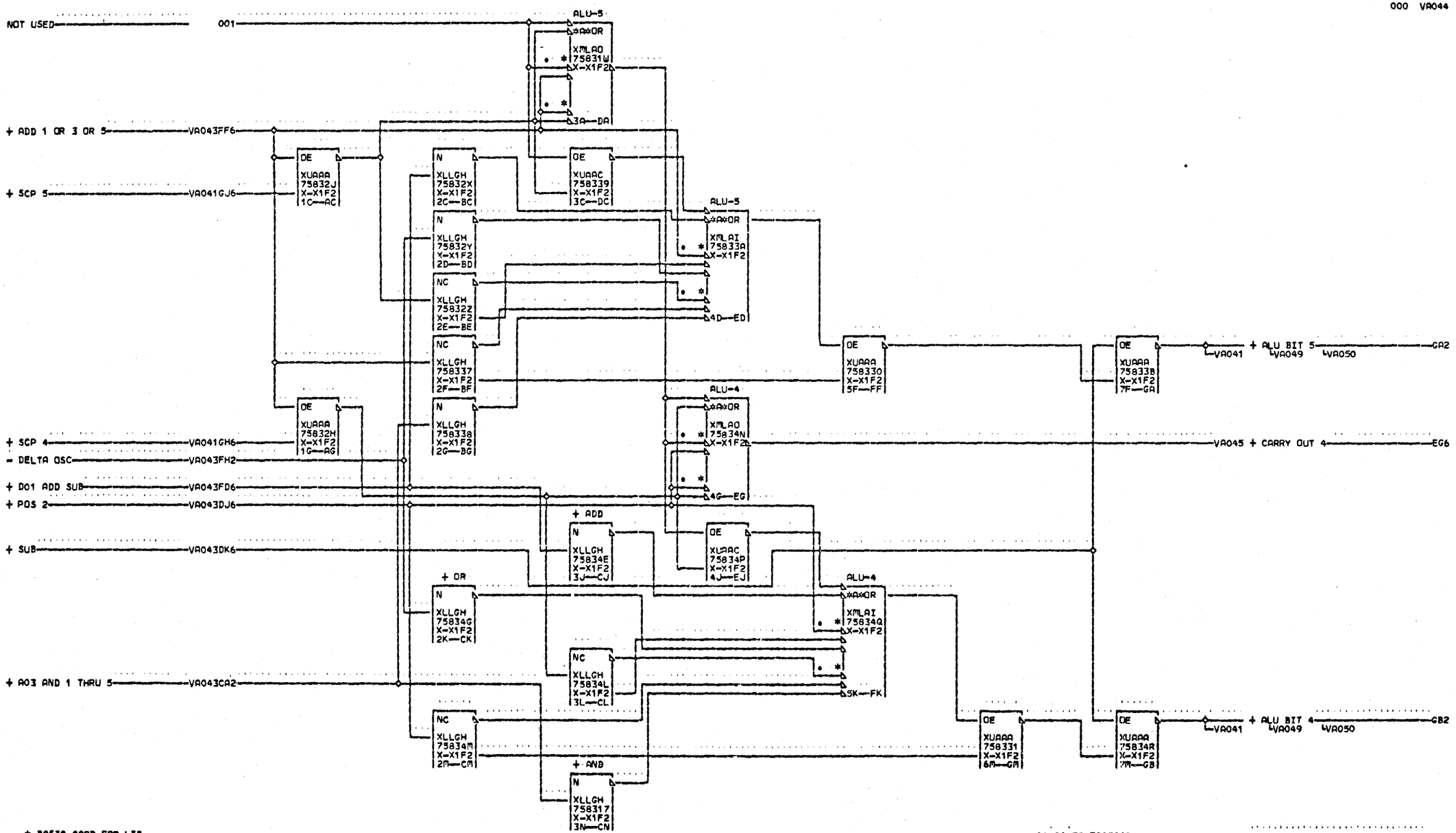

* BASIC CARD FOR LIB
* UNUSED INPUTS FLOAT MINUS.

VA044 000

01-26-72 309520C

ALU BITS 5 AND 4				VA044 000
DATE	01-26-72	MACH. 27RNB		
LOG	600	FRAME	01	
		P.N.	1785412	
IBM CORP.		BLK.	GN	

000 VA045

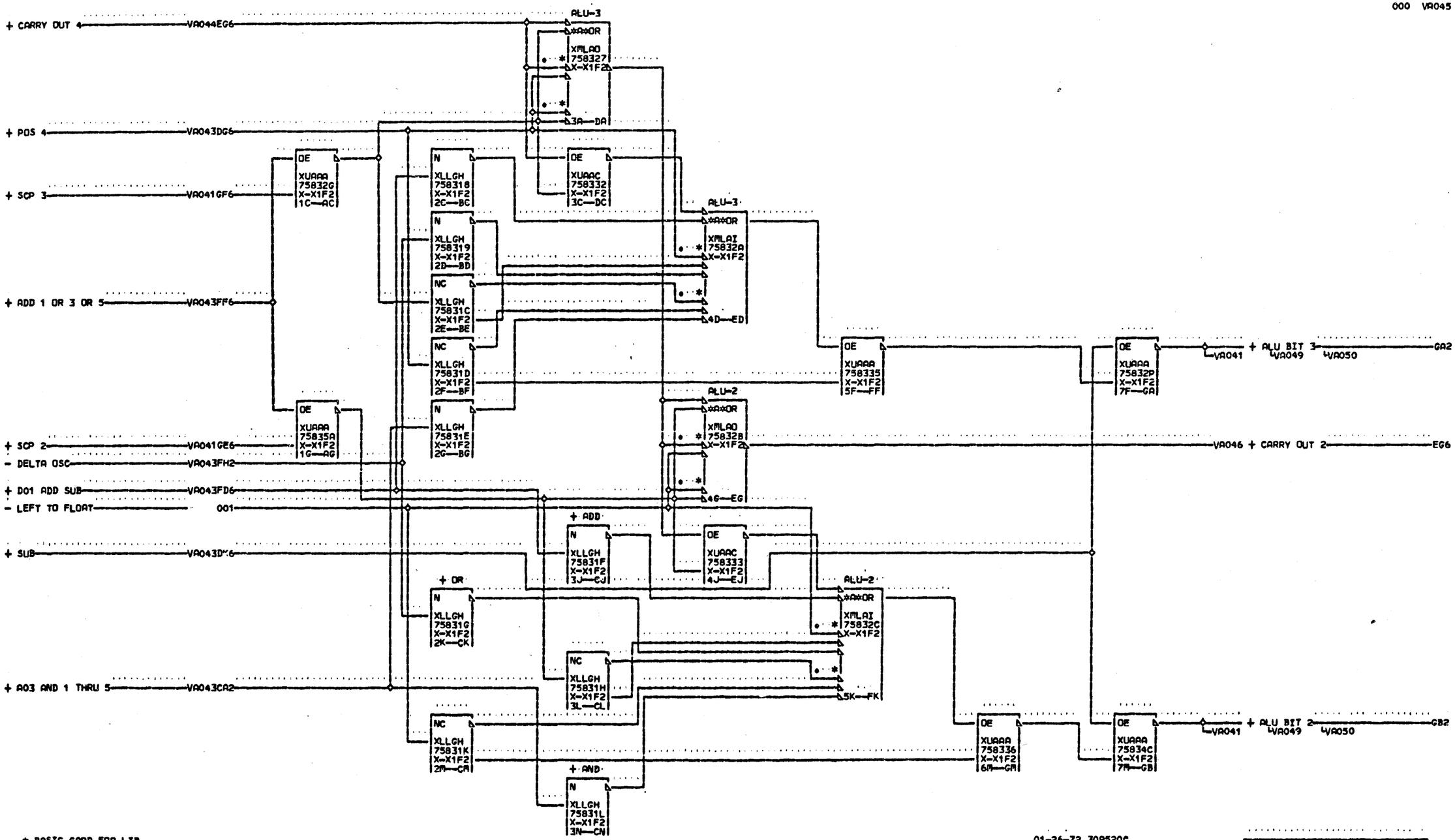

* BASIC CARD FOR LIB
* UNUSED INPUTS FLOAT MINUS

01-26-72 309520C

ALU BITS 3 AND 2			
DATE	01-26-72	MACH. 27RNB	
LOG	600	FRAME	01
		P.N.	1785413
IBM CORP.		BLK.	GN

VA045 000

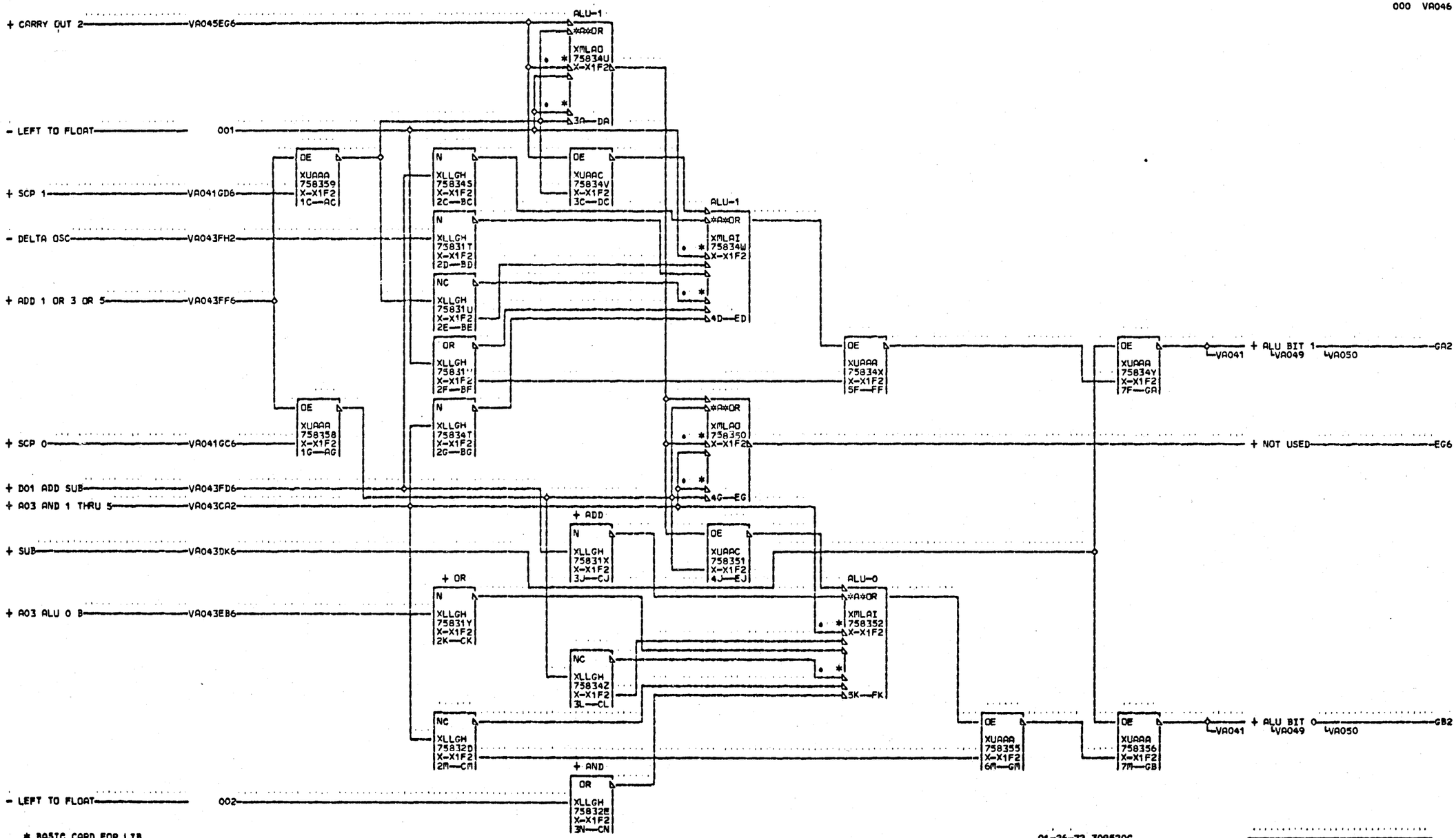

* BASIC CARD FOR LIB
* UNUSED INPUTS FLOAT MINUS

VA046
000

01-26-72 3095200

ALU BITS 1 AND 0				
DATE	01-26-72	MACH.	27RNB	VA046
LOC	600	FRAME	01	
		P.N.	1785414	000
IBM CORP.		BLK.	GN	

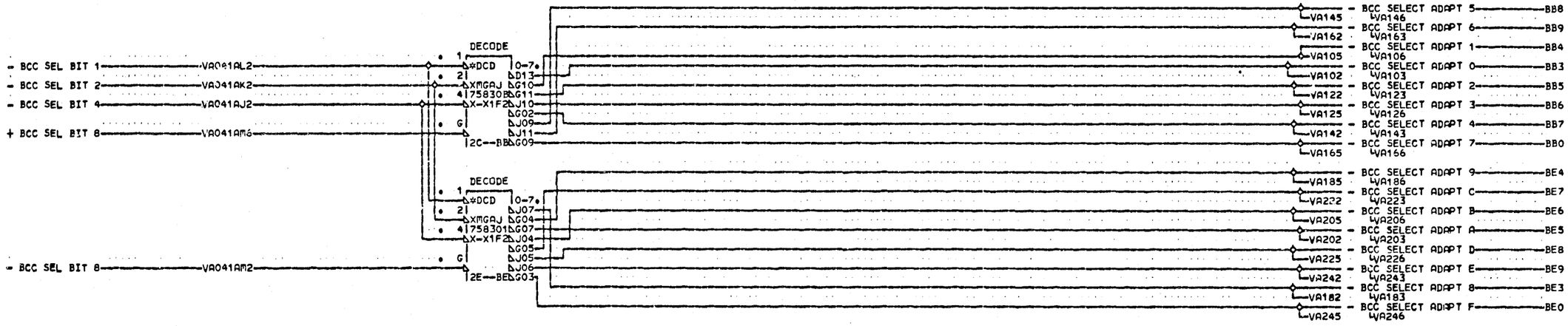

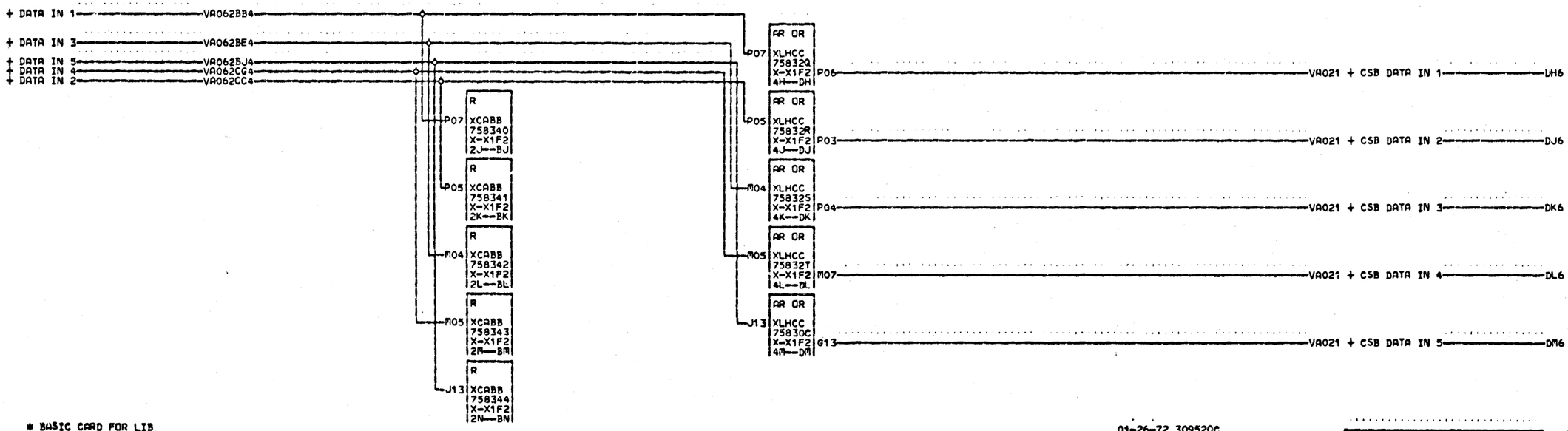

* BASIC CARD FOR LIB

VA047 000

01-26-72 309520C

LIB BIT CLOCK CARD
DATE 01-26-72 MACH. 27RNB
LOG 600 FRAME 01
P.N. 1785415
IBM CORP. SDD BLK. GH
VA047 000

000 VA048

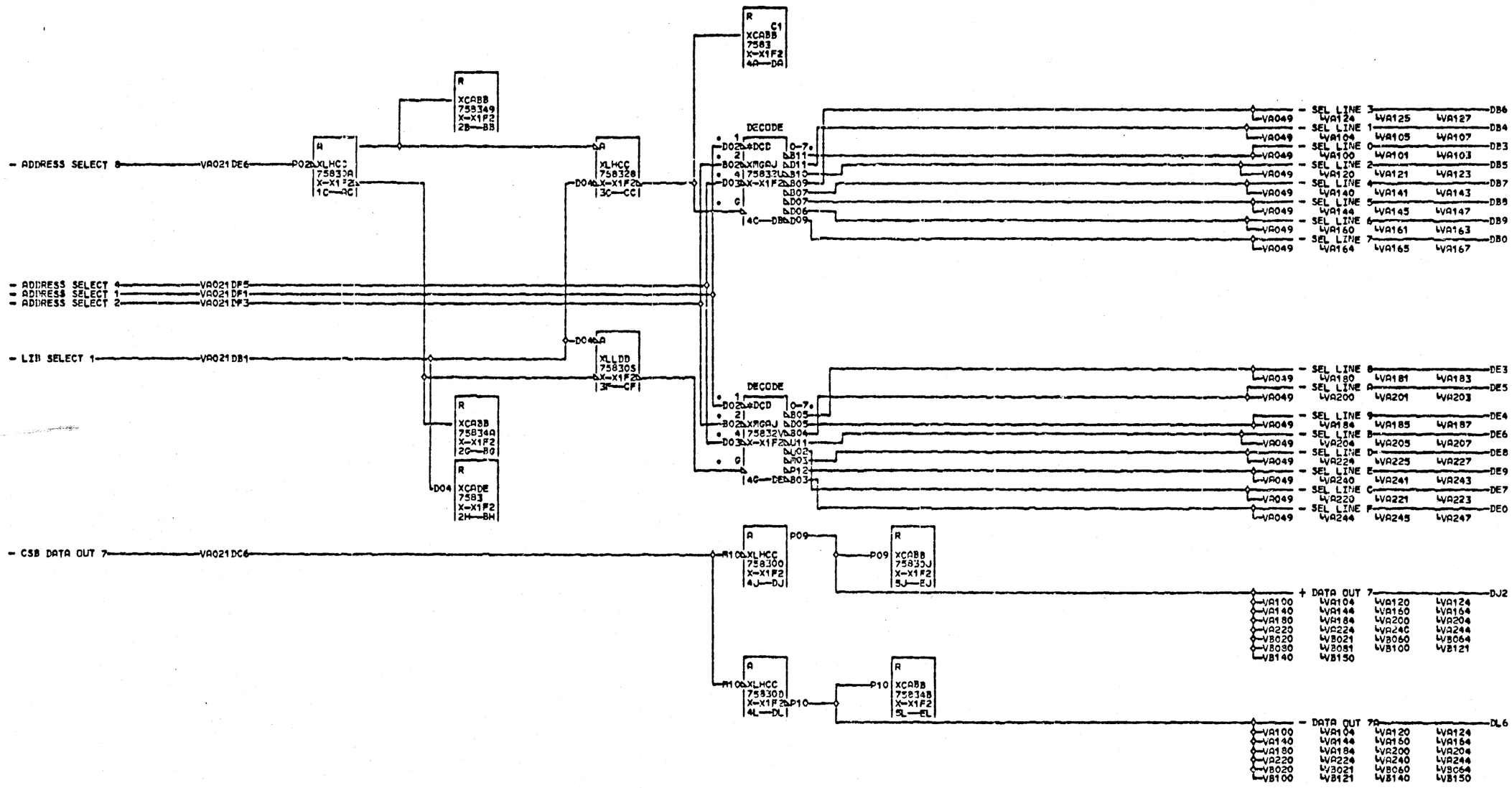

* BASIC CARD FOR LIB

VA048

000

01-26-72 309520C
04-20-72 309543
08-24-72 309546
05-06-78 318570

LIB BIT CLOCK CARD				VA048
DATE 08-10-78	MACH. 27ANB			
LOG 764	FRAME 01			
	P.N. 1785416			
IBM CORP.	SDD BLK.		PN	000

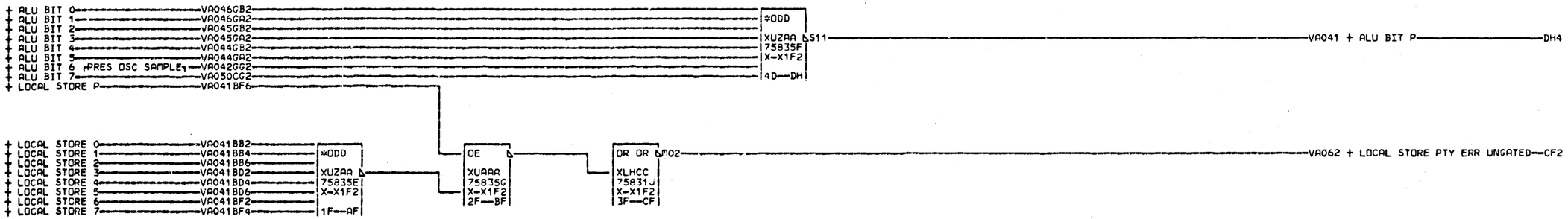

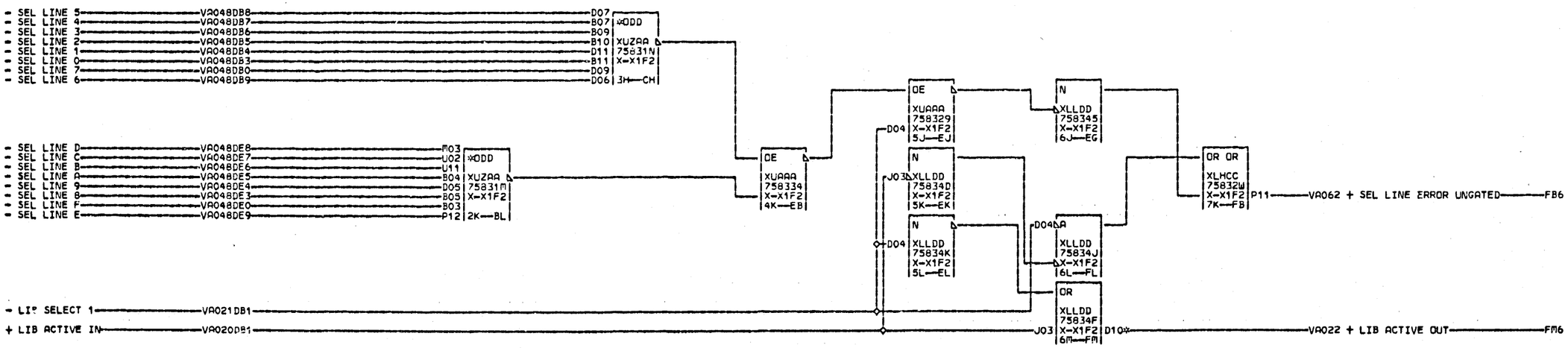

* BASIC CARD FOR LIB

FM6 X-X1A1D13

01-25-72 309520C
03-10-72 309540

LIB BIT CLOCK CARD					
DATE	04-06-72	MACH.	27RNB		VA049
LOG	255	FRAME	01		
		P.N.	1785417		
IBM CORP.	SDD BLK.		GL		000

VA049
000

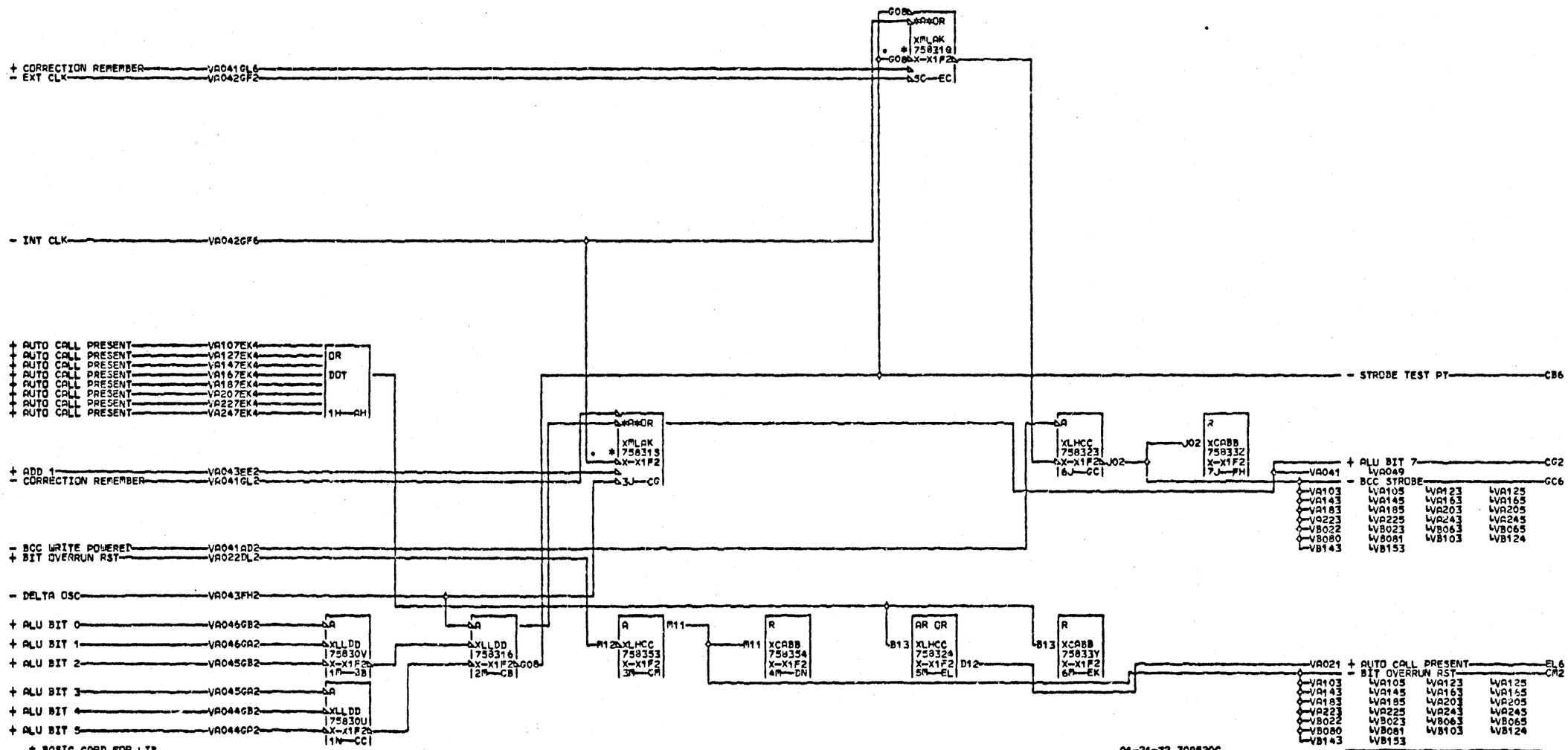
+ CORRECTION REMEMBER VA041GL6
- EXT CLK VA042GF2
- INT CLK VA042GF6
+ AUTO CALL PRESENT VA107EK4
+ AUTO CALL PRESENT VA127EK4
+ AUTO CALL PRESENT VA147EK4
+ AUTO CALL PRESENT VA167EK4
+ AUTO CALL PRESENT VA187EK4
+ AUTO CALL PRESENT VA207EK4
+ AUTO CALL PRESENT VA227EK4
+ AUTO CALL PRESENT VA247EK4
OR
DOT
1H—AH
+ ADD 1 VA043EE2
- CORRECTION REMEMBER VA041GL2
- BCC WRITE POWERED VA041AD2
+ BIT OVERRUN RST VA022DL2
- DELTA OSC VA043FH2
+ ALU BIT 0 VA046GB2
+ ALU BIT 1 VA046GA2
+ ALU BIT 2 VA045GB2
+ ALU BIT 3 VA045GA2
+ ALU BIT 4 VA044GB2
+ ALU BIT 5 VA044GP2
* BASIC CARD FOR LIB
VA050
000
G08
XMLAK
758319
X-X1F2
SC—EC
XMLAK
758315
X-X1F2
3J—CG
XLHCC
758323
X-X1F2
6J—GC
J02
XCABB
758332
X-X1F2
7J—FH
- STROBE TEST PT CB6
+ ALU BIT 7 CG2
- BCC STROBE GC6
VA041
VA049
VA103 VA105 VA123 VA125
VA143 VA145 VA163 VA165
VA183 VA185 VA203 VA205
VA223 VA225 VA243 VA245
VB022 VB023 VB063 VB065
VB080 VB081 VB103 VB124
VB143 VB153
XLLDD
75830V
X-X1F2
1M—3B
XLLDD
75830U
X-X1F2
1N—CC
XLLDD
758316
X-X1F2
2M—CB
G08
XLHCC
758353
X-X1F2
3M—CM
M11
XCABB
758354
X-X1F2
4M—DN
B13
XLHCC
758324
X-X1F2
5M—EL
D12
XCABB
75833Y
X-X1F2
6M—EK
VA021
+ AUTO CALL PRESENT EL6
- BIT OVERRUN RST CM2
VA103 VA105 VA123 VA125
VA143 VA145 VA163 VA165
VA183 VA185 VA203 VA205
VA223 VA225 VA243 VA245
VB022 VB023 VB063 VB065
VB080 VB081 VB103 VB124
VB143 VB153
01-26-72 309520C
04-20-72 309543
08-24-72 309546
05-06-78 318570
LIB BIT CLOCK CARD
DATE 08-10-78 MACH. 27RNB
LOG 764 FRAME 01
P.N. 1785418
IBM CORP. SDD BLK. GJ
VA050
000

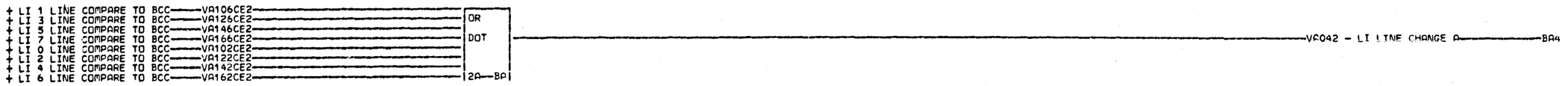

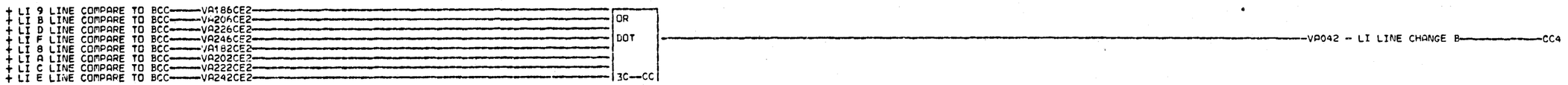

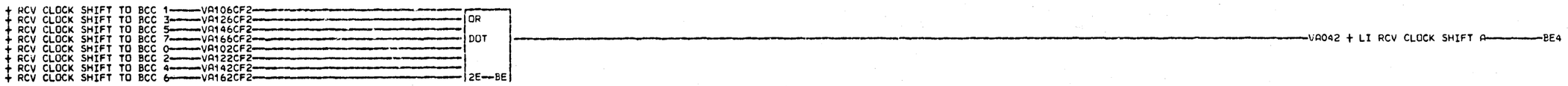

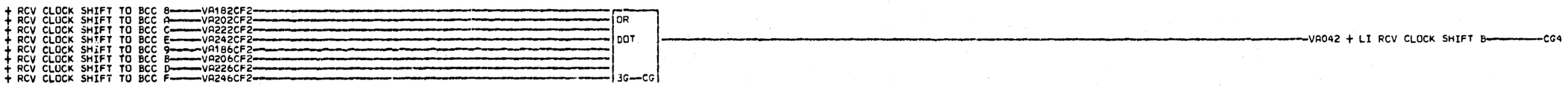

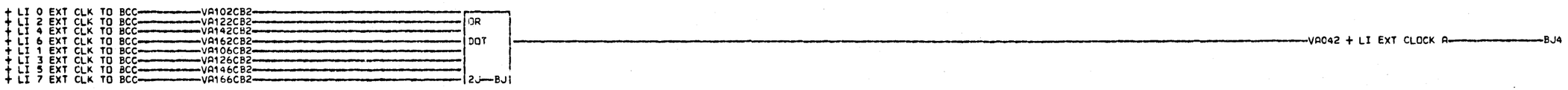

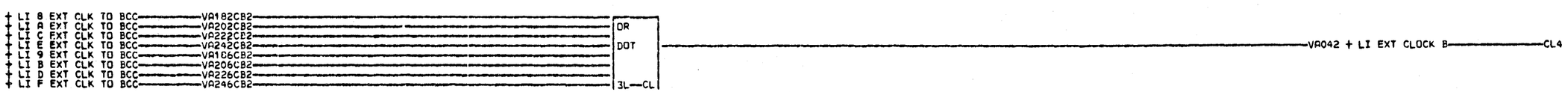

* BASIC CARD FOR LIB

VA060

000

01-26-72 309520C
03-10-72 309540

LIB BIT CLOCK CARD			
DATE	04-06-72	MACH. 27RNB	
LOG	255	FRAME	01
		P.N. 1785419	
IBM CORP.	SDD	BLK.	CM

VA060 000

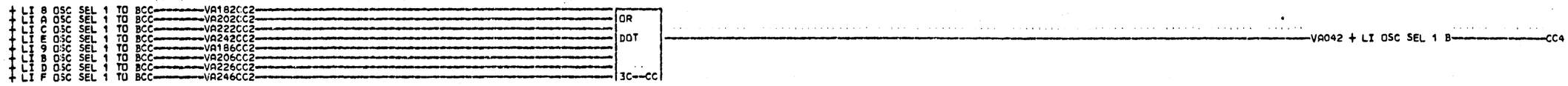

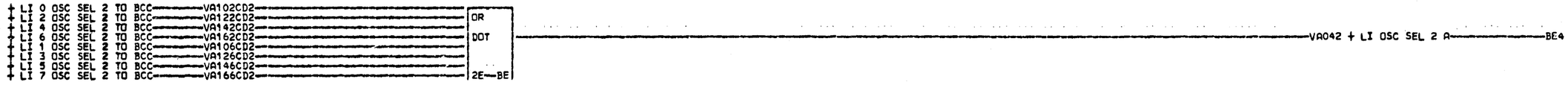

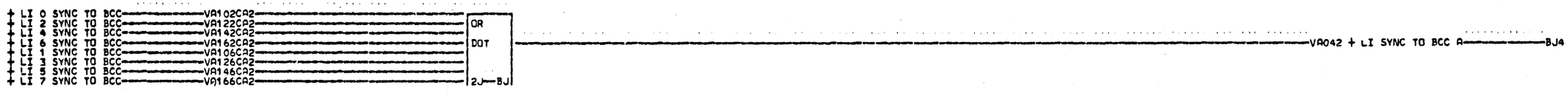

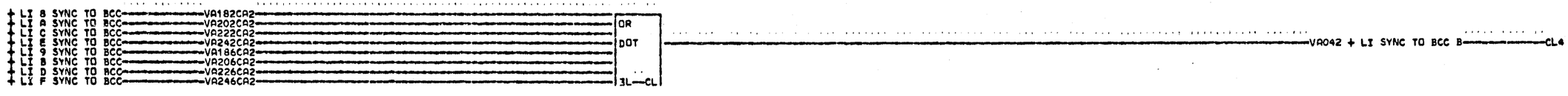

* BASIC CARD FOR LIB

VA061 000

01-26-72 309520C

LIB BIT CLOCK CARD

DATE 01-26-72 MACH. 27RNB

LOG 600 FRAME 01

P.N. 1785420

IBM CORP. SDD BLK. CM

VA061 000

000 VA062

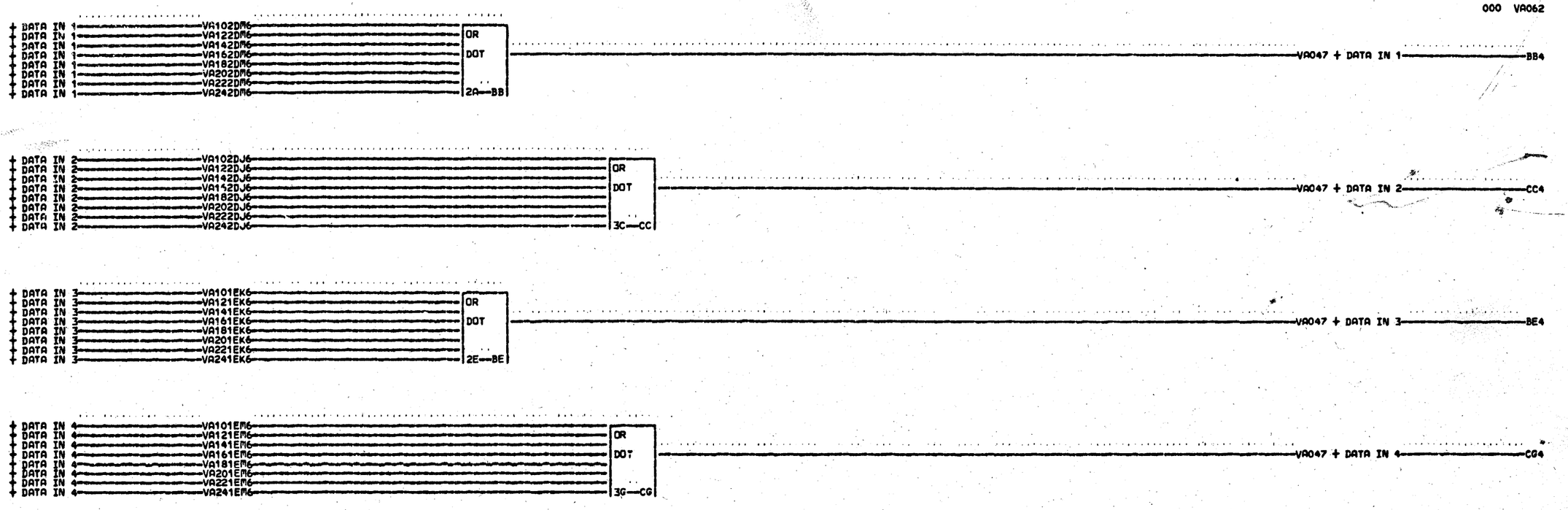

* BASIC CARD FOR LIB

VA062 000

DK4 X=X1F1A13
01X=X1F6A04
DL4 X=X1D6E04
01X=X1D1E11
DM4 X=X1E6E02
01X=X1E1E11

01-26-72 309520C

LIB BIT CLOCK CARD
DATE 01-26-72 MACH. 27RNB
LOG 600 FRAME 01
PcNo 1785421
IBM CORP. SDD BLK. DN

VA062 000

000 VA070

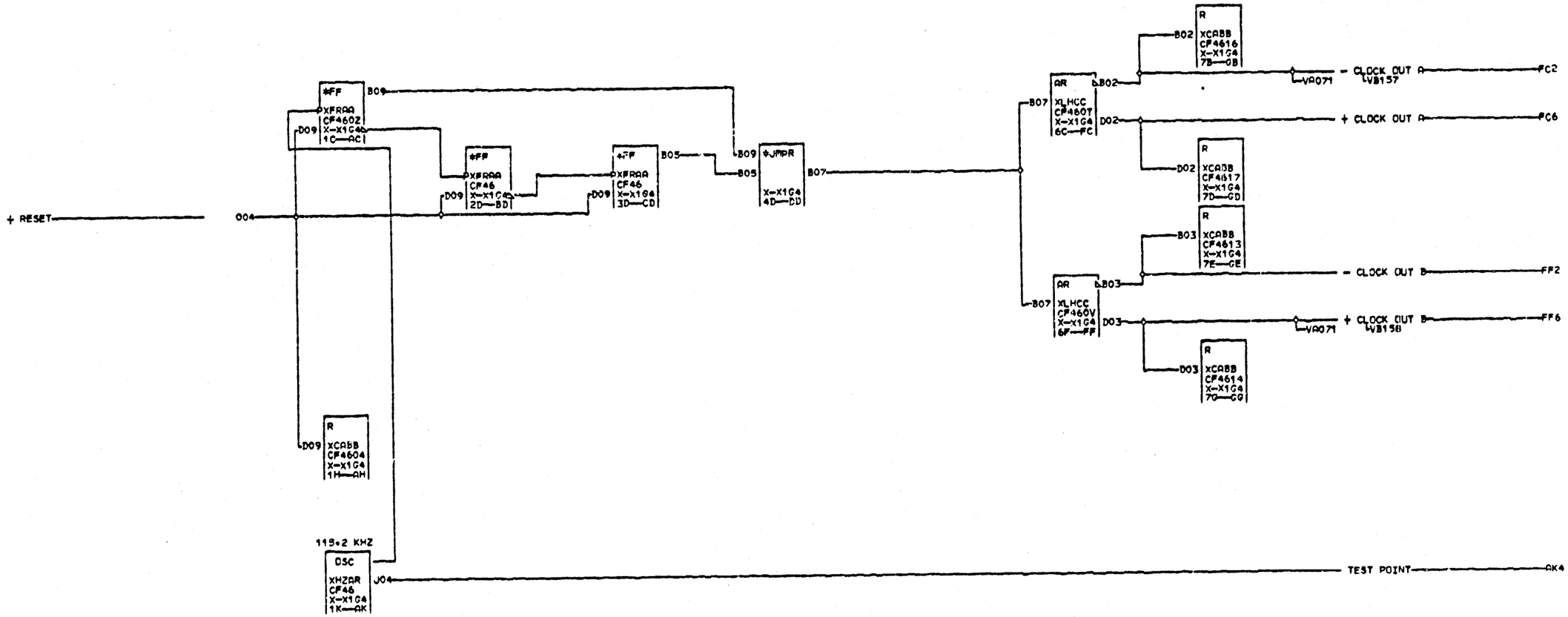

NOTE • JUMPER B09 TO B07 FOR 57.6KHZ CLOCK. JUMPER B05 TO B07 FOR 14.4 KHZ CLOCK.

VA070 000

06-06-78 318570

14.4KHZ AND 57.6KHZ LINE OSCILLATOR
DATE 08-10-78 MACH. 27RNB
LOG 751 FRAME 01
P.N. 1749538
IBM CORP. SDD BLK. SA

VA070 000

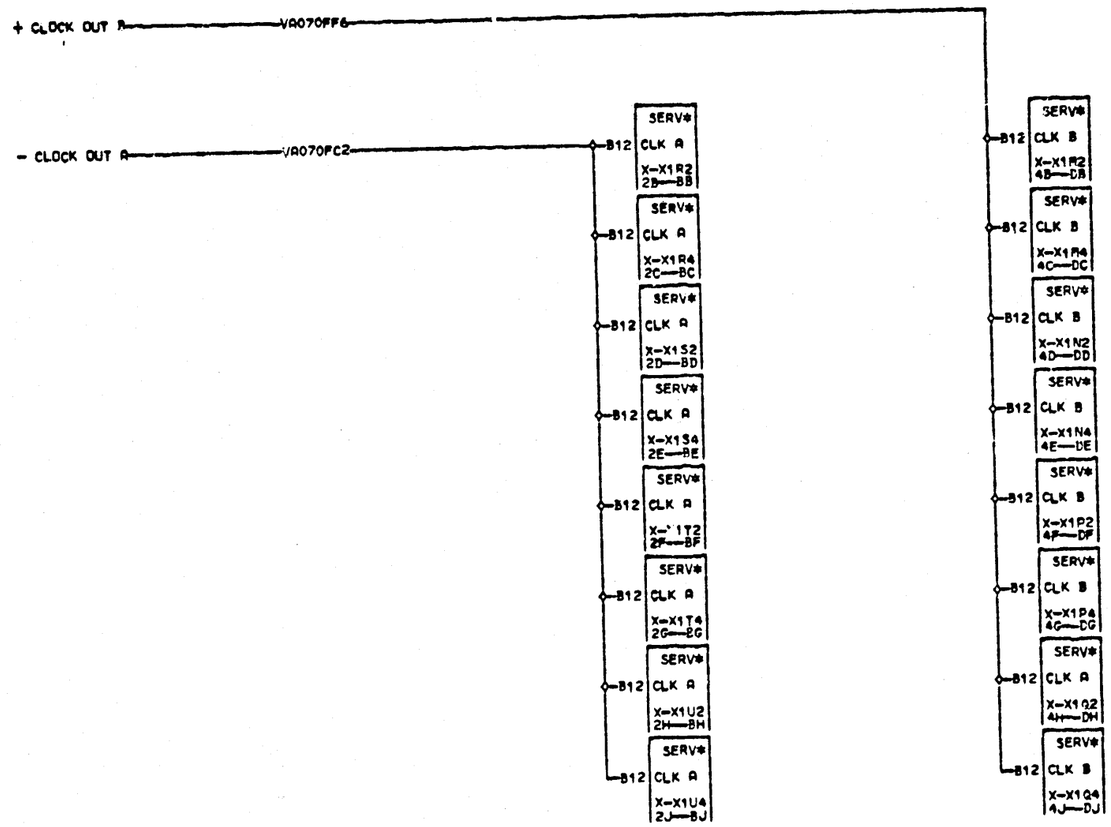

06-06-78 318570

OSC A AND OSC B SERVICE		PAGE	
DATE	06-10-78	MACH. 27RNB	
LOG	751	FRAME	01
		P.N. 1749547	
IBM CORP.	SCD BLK.		DK

000 VA081

+ BCC SELECT 4	VA020DD7	D03	R XCADE N885 X-X1A4 6A—FA
+ BCC SELECT 8	VA020DE2	D05	R XCADE N885 X-X1A4 6B—FB
+ BCC READ	VA020DE4	D06	R XCADE N885 X-X1A4 6C—FC
- BCC WRITE	VA020DE6	D07	R XCADE N885 X-X1A4 6E—FE
+ CONTROL OUT A	VA020DF1	D09	R XCADE N885 X-X1A4 6F—FF
+ CONTROL OUT B	VA020DF3	D10	R XCADE N885 X-X1A4 6H—FH
+ RESET BIT SERVICE	VA020DF7	D11	R XCADE N885 X-X1A4 6J—FJ
+ BCC SELECT 1	VA022DL4	D13	R XCADE N885 X-X1A4 6L—FL
UNUSED PIN B06	001		R XCADE N885 X-X1A4 6M—FM

* NOTE.
* CARD PN 5862885 IS PLUGGED
* IN A4 OF THE LAST LIB
* BOARD ON EACH CSB INTERFACE.
* TYPE 2 CSB HAS 2 INTERFACES.
* TYPE 1 CSB HAS 1 INTERFACE.

VA081
000

01-26-72 309520C

TERMINATOR CARD

DATE 01-26-72 MACH. 27RNB

LOG 600 FRAME 01

P.N. 1785422

IBM CORP. SDD BLK. FN

VA081 000

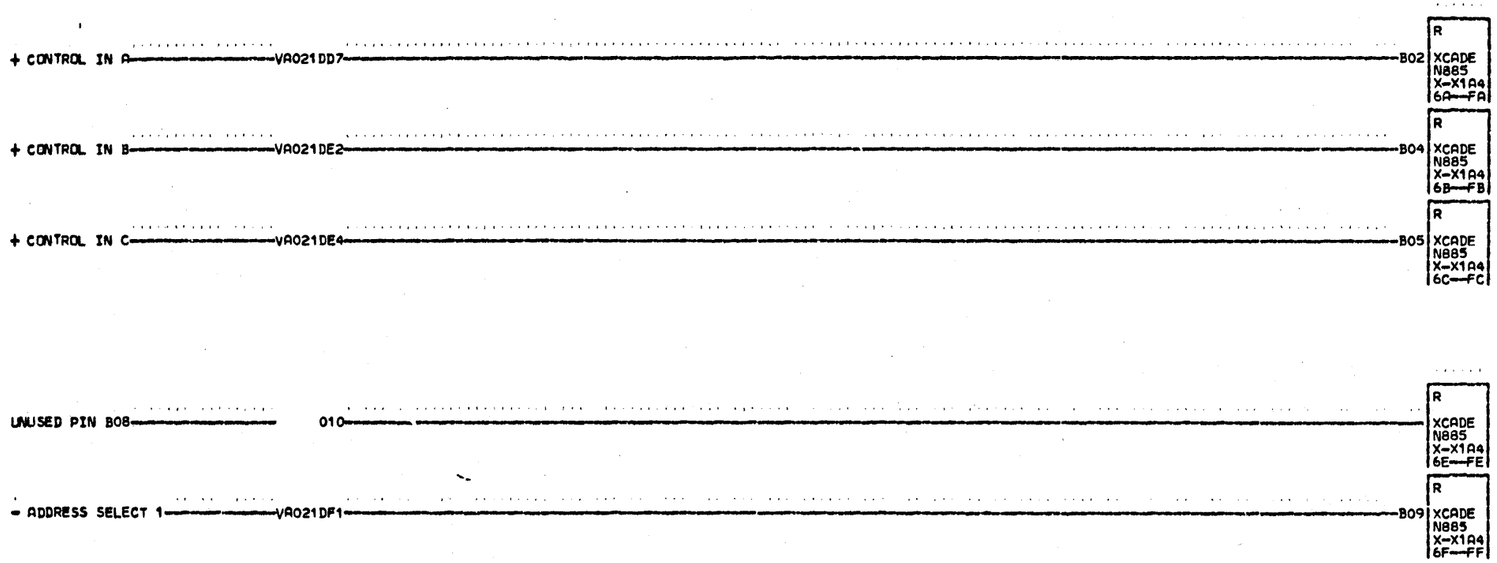

* NOTE.
* CARD PN 5862885 IS PLUGGED
V * IN A4 OF THE LAST LIB
A * BOARD ON EACH CSB INTERFACE.
0 * TYPE 2 CSB HAS 2 INTERFACES.
8 * TYPE 1 CSB HAS 1 INTERFACE.
2

000

01-26-72 309520C

TERMINATOR CARD					
DATE	01-26-72 MACH. 27RNB				V A 0 8 2
LOC.	600	FRAME	01		
		P.N.	1785423		000
IBM CORP.	SDD BLK.			FN	

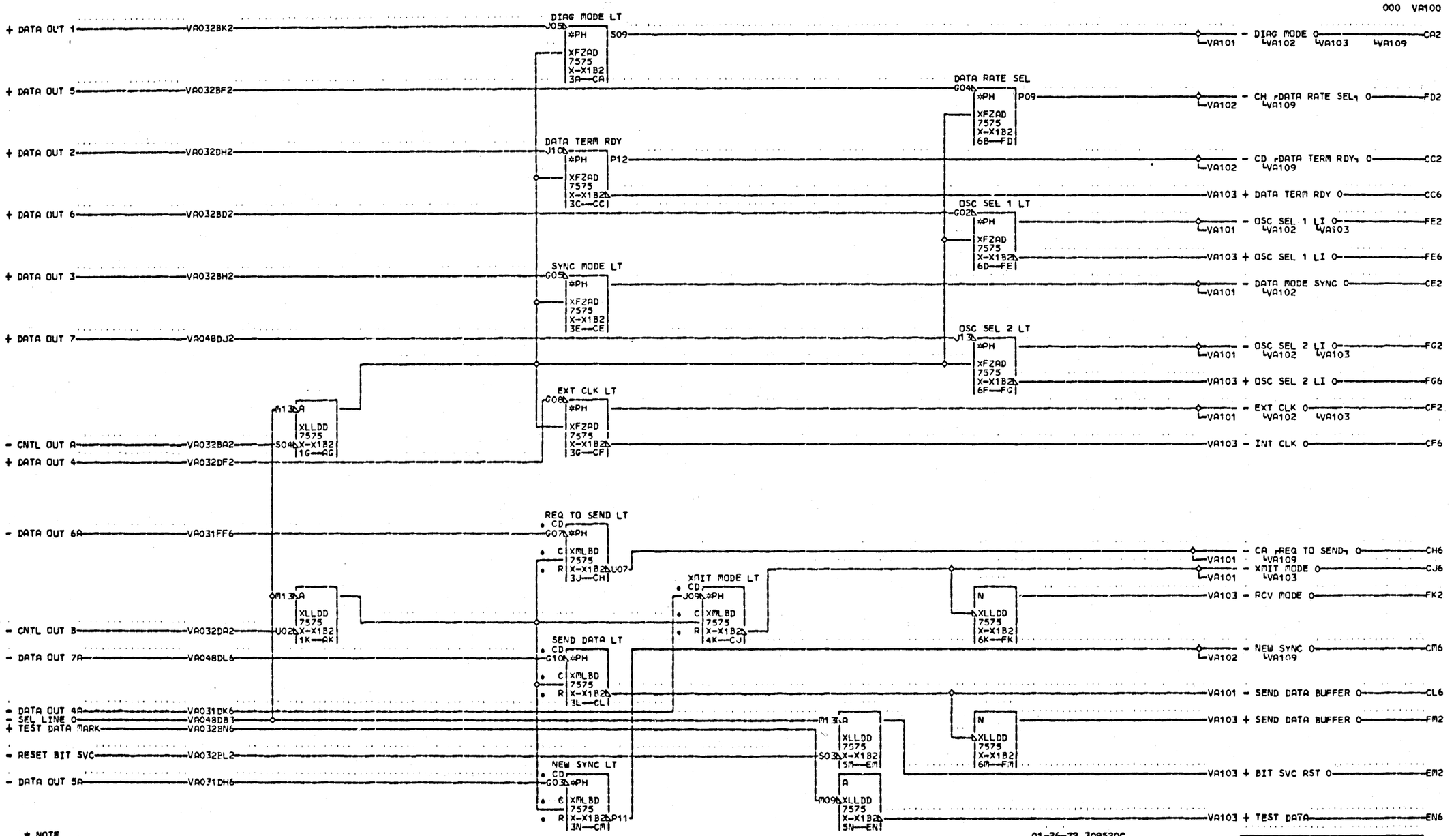

* NOTE
*FULL FEATURE WIRING SHOWN
*WITH EIA SYNC LINE SET.
*SEE VA000 FOR OTHER LINE SET

V A 1 0 0

000

01-26-72 309520C

EIA SYNC LINE INTERFACE CARD				V A 1 0 0
DATE 01-26-72 MACH. 27RNB				
LOG	600	FRAME	01	
		P.N.	1785424	
IBM CORP.	SDD #LK.		GL	000

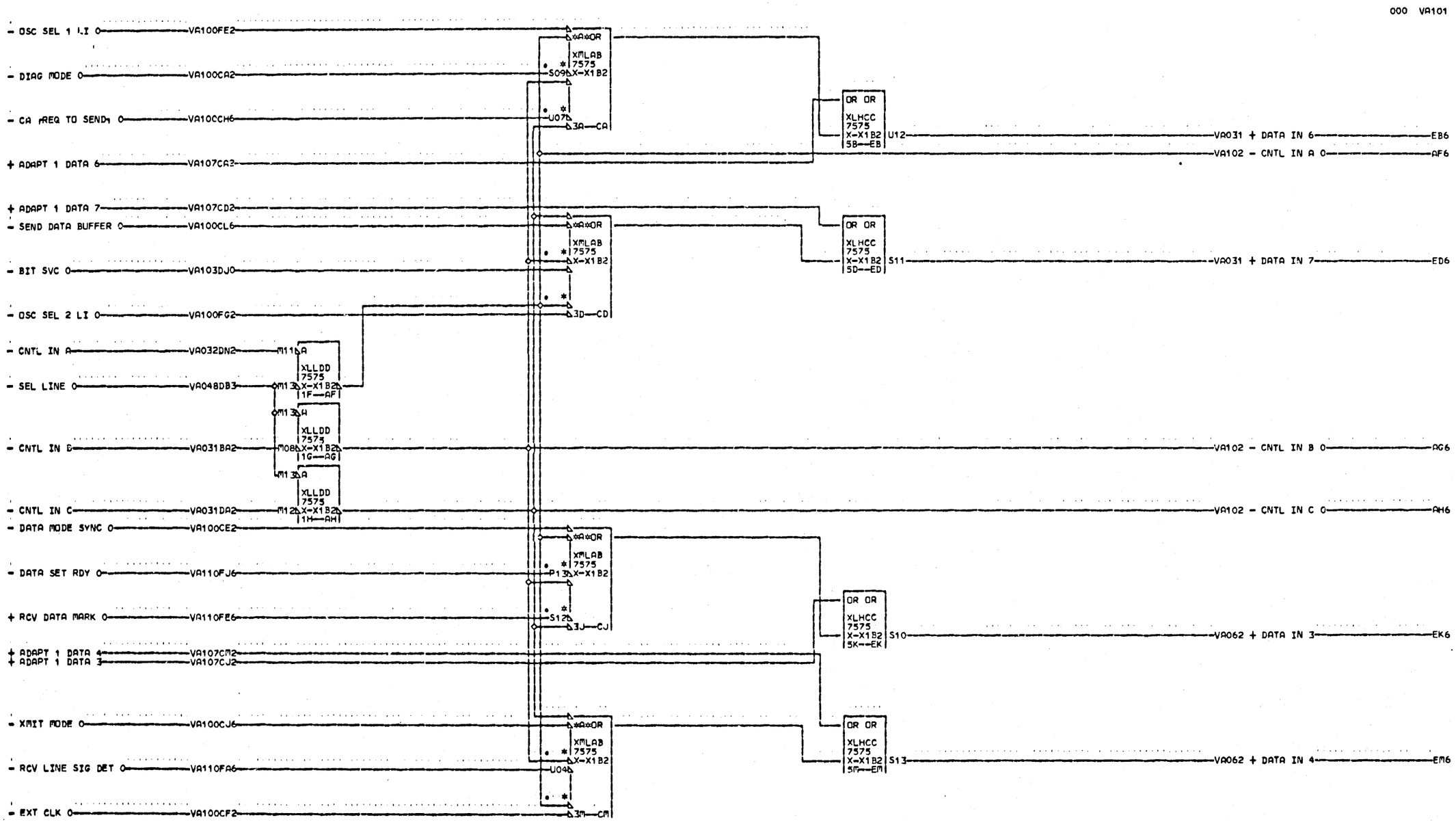
000 VA101
- OSC SEL 1 LI 0 VA100FE2
- DIAG MODE 0 VA100CA2
- CA REQ TO SEND 0 VA100CH6
+ ADAPT 1 DATA 6 VA107CA2
+ ADAPT 1 DATA 7 VA107CD2
- SEND DATA BUFFER 0 VA100CL6
- BIT SVC 0 VA103DJ0
- OSC SEL 2 LI 0 VA100FG2
- CNTL IN A VA032DN2
- SEL LINE 0 VA048DB3
- CNTL IN B VA031BA2
- CNTL IN C VA031DA2
- DATA MODE SYNC 0 VA100CE2
- DATA SET RDY 0 VA110FJ6
+ RCV DATA MARK 0 VA110FE6
+ ADAPT 1 DATA 4 VA107CM2
+ ADAPT 1 DATA 3 VA107CJ2
- XMIT MODE 0 VA100CJ6
- RCV LINE SIG DET 0 VA110FA6
- EXT CLK 0 VA100CF2
XMLAB 7575 X-X1B2
XLLDD 7575 X-X1B2
XLHCC 7575 X-X1B2
OR OR
U12 VA031 + DATA IN 6 EB6
VA102 - CNTL IN A 0 AF6
S11 VA031 + DATA IN 7 ED6
VA102 - CNTL IN B 0 AG6
VA102 - CNTL IN C 0 AH6
S10 VA062 + DATA IN 3 EK6
S13 VA062 + DATA IN 4 EM6
01-26-72 309520C
* NOTE
*FULL FEATURE WIRING SHOWN
*WITH EIA SYNC LINE SET.
*SEE VA000 FOR OTHER LINE SET
EIA SYNC
LINE INTERFACE CARD
DATE 01-26-72 MACH. 27RNB
LOG 600 FRAME 01
P.N. 1785425
IBM CORP. SDD BLK. EN

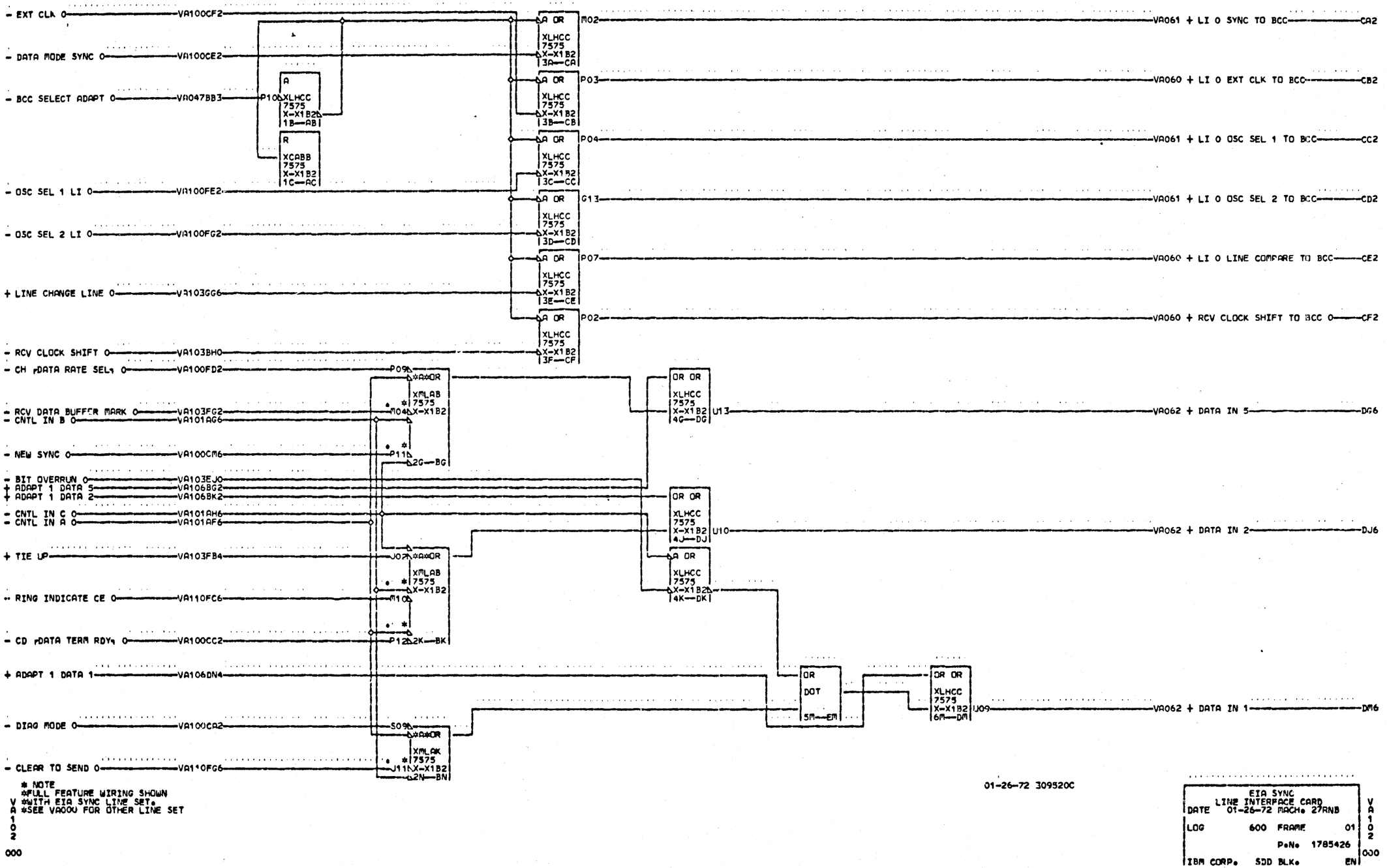

* NOTE
*FULL FEATURE WIRING SHOWN
*WITH EIA SYNC LINE SETs
*SEE VA00U FOR OTHER LINE SET

01-26-72 309520C

EIA SYNC
LINE INTERFACE CARD
DATE 01-26-72 MACHs 27RNB
LOG 600 FRAME 01
PsNs 1785426
IBM CORPs SDD BLKs EN

VA102 000

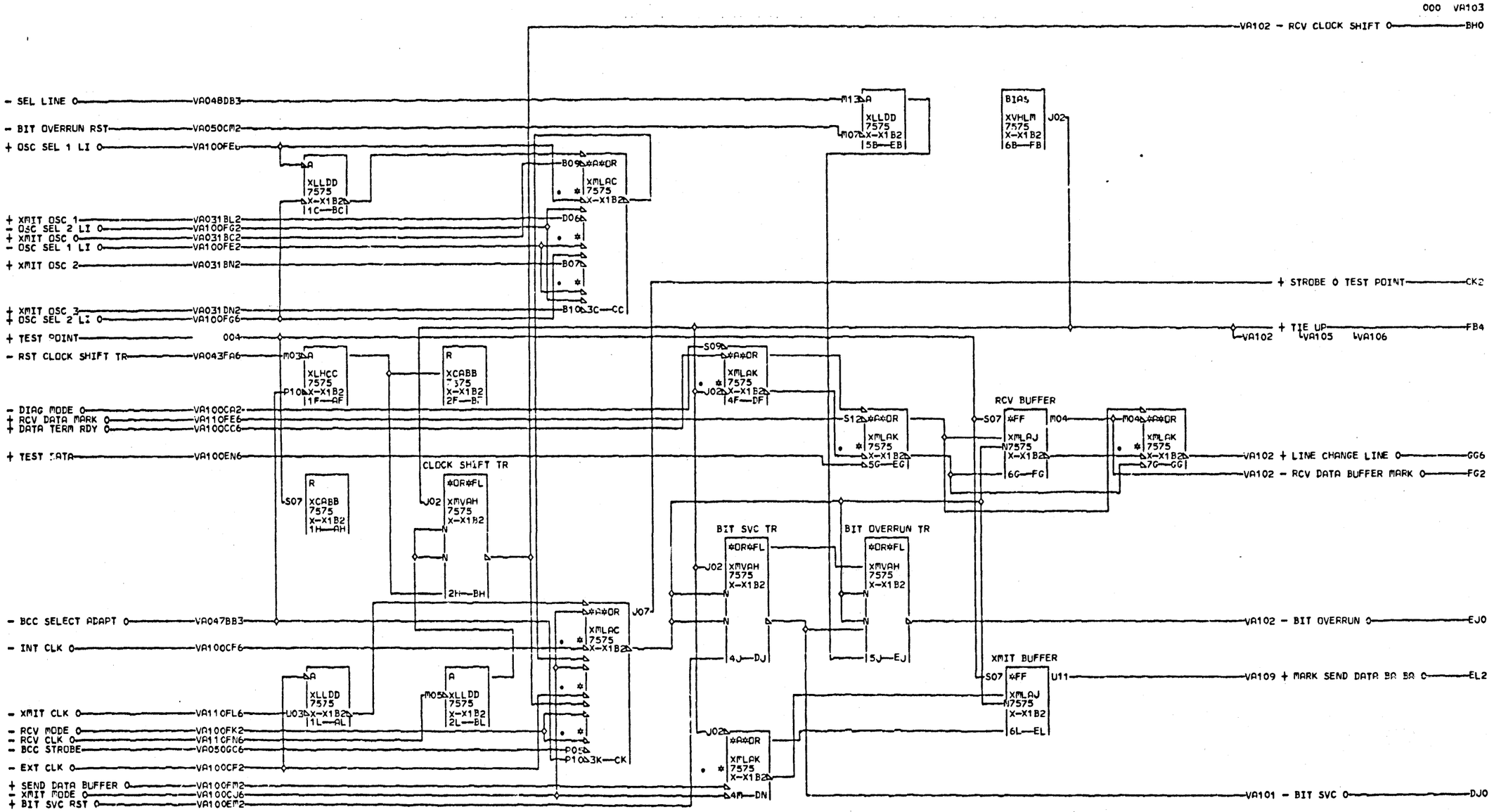

* NOTE
* FULL FEATURE WIRING SHOWN
V * WITH EIA SYNC LINE SET
A * AND LINE INTERFACE CARD
1 * PN 8211452 INSTALLED
0 * SEE VA000 FOR OTHER
3 * LINE SETS

000

01-26-72 309520C
11-11-74 311286

EIA SYNC
LINE INTERFACE CARD
DATE 11-22-74 MACH. 27RNB
LOG 400 FRAME 01
P.N. 1785427
IBM CORP. SDD BLK. GH

VA103 000

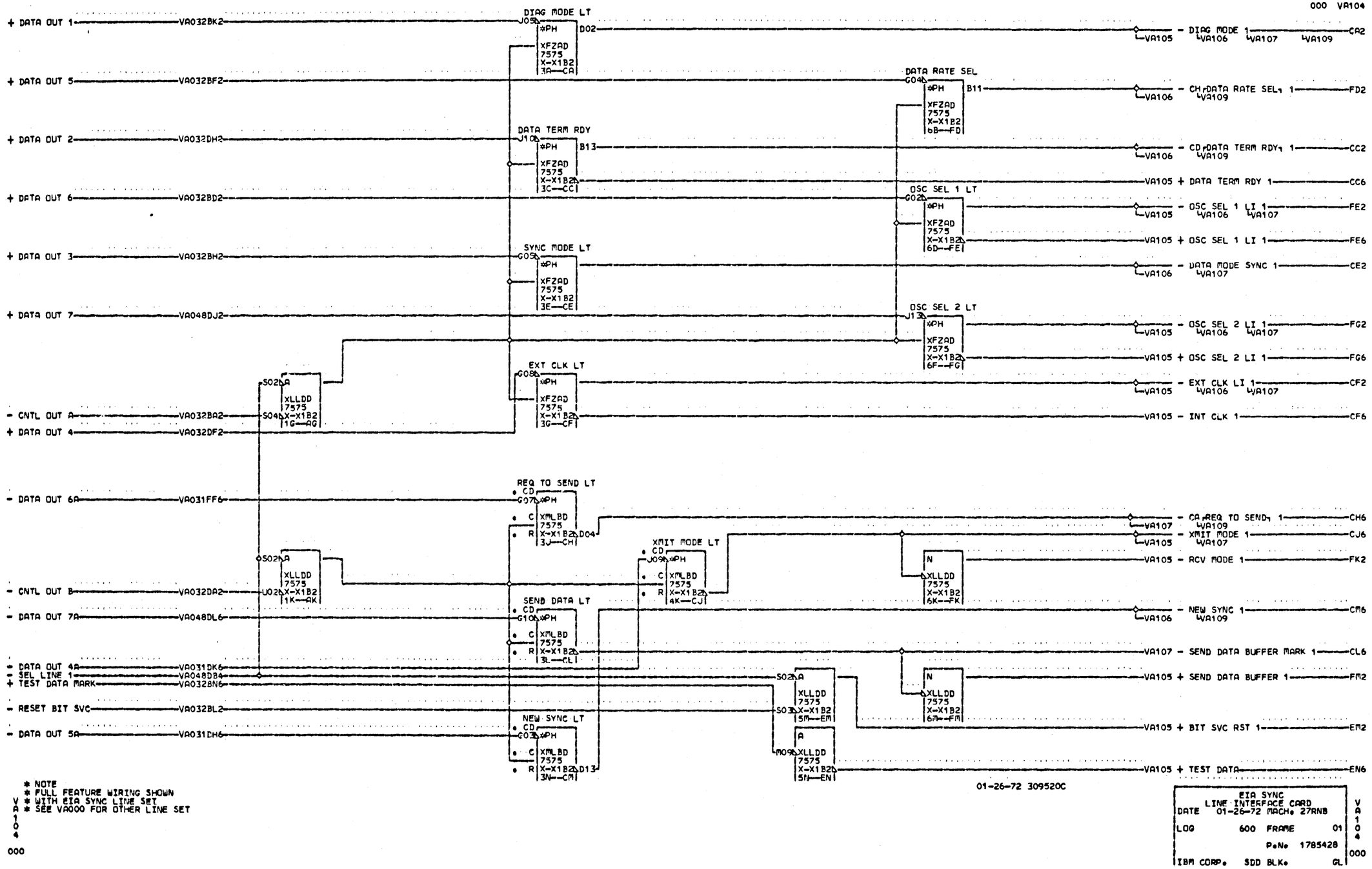
000 VA104
+ DATA OUT 1 VA032BK2
DIAG MODE LT J05 *PH D02 XFZAD 7575 X-X1B2 3A—CA
- DIAG MODE 1 CA2
+ DATA OUT 5 VA032BF2
DATA RATE SEL G04 *PH B11 XFZAD 7575 X-X1B2 6B—FD
- CH DATA RATE SEL 1 FD2
+ DATA OUT 2 VA032DH2
DATA TERM RDY J10 *PH B13 XFZAD 7575 X-X1B2 3C—CC
- CD DATA TERM RDY 1 CC2
+ DATA TERM RDY 1 CC6
+ DATA OUT 6 VA032BD2
OSC SEL 1 LT G02 *PH XFZAD 7575 X-X1B2 6D—FE
- OSC SEL 1 LI 1 FE2
+ OSC SEL 1 LI 1 FE6
+ DATA OUT 3 VA032BH2
SYNC MODE LT G05 *PH XFZAD 7575 X-X1B2 3E—CE
- DATA MODE SYNC 1 CE2
+ DATA OUT 7 VA048DJ2
OSC SEL 2 LT J13 *PH XFZAD 7575 X-X1B2 6F—FG
- OSC SEL 2 LI 1 FG2
+ OSC SEL 2 LI 1 FG6
EXT CLK LT G08 *PH XFZAD 7575 X-X1B2 3G—CF
- EXT CLK LI 1 CF2
- INT CLK 1 CF6
S02 A XLLDD 7575 X-X1B2 1G—AG
- CNTL OUT A VA032BA2
+ DATA OUT 4 VA032DF2
REQ TO SEND LT G07 CD C XMLBD 7575 R X-X1B2 3J—CH D04
- DATA OUT 6A VA031FF6
- CA REQ TO SEND 1 CH6
- XMIT MODE 1 CJ6
XMIT MODE LT J09 CD C XMLBD 7575 R X-X1B2 4K—CJ
S02 A XLLDD 7575 X-X1B2 1K—AK
- CNTL OUT B VA032DA2
N XLLDD 7575 X-X1B2 6K—FK
- RCV MODE 1 FK2
SEND DATA LT G10 CD C XMLBD 7575 R X-X1B2 3L—CL
- DATA OUT 7A VA048DL6
- NEW SYNC 1 CM6
- DATA OUT 4A VA031DK6
- SEL LINE 1 VA048DB4
+ TEST DATA MARK VA032BN6
S02 A XLLDD 7575 X-X1B2 5M—EM
N XLLDD 7575 X-X1B2 6M—FM
+ SEND DATA BUFFER 1 FM2
- RESET BIT SVC VA032BL2
S03 A XLLDD 7575 X-X1B2 5N—EN
+ BIT SVC RST 1 EM2
NEW SYNC LT G03 CD C XMLBD 7575 R X-X1B2 3N—CM D13
- DATA OUT 5A VA031DH6
M09 A XLLDD 7575 X-X1B2 5H—EN
+ TEST DATA EN6
- SEND DATA BUFFER MARK 1 CL6
- XMIT MODE 1 CJ6
- RCV MODE 1 FK2
- NEW SYNC 1 CM6
- CA REQ TO SEND 1 CH6
- INT CLK 1 CF6
- EXT CLK LI 1 CF2
- OSC SEL 2 LI 1 FG2
+ OSC SEL 2 LI 1 FG6
- OSC SEL 1 LI 1 FE2
+ OSC SEL 1 LI 1 FE6
- DATA MODE SYNC 1 CE2
- CH DATA RATE SEL 1 FD2
- CD DATA TERM RDY 1 CC2
+ DATA TERM RDY 1 CC6
- DIAG MODE 1 CA2
* NOTE
* FULL FEATURE WIRING SHOWN
* WITH EIA SYNC LINE SET
* SEE VA000 FOR OTHER LINE SET
VA104
000
01-26-72 309520C
EIA SYNC
LINE INTERFACE CARD
DATE 01-26-72 MACH. 27RNB
LOG 600 FRAME 01
P.N. 1785428
IBM CORP. SDD BLK. GL
VA104
000

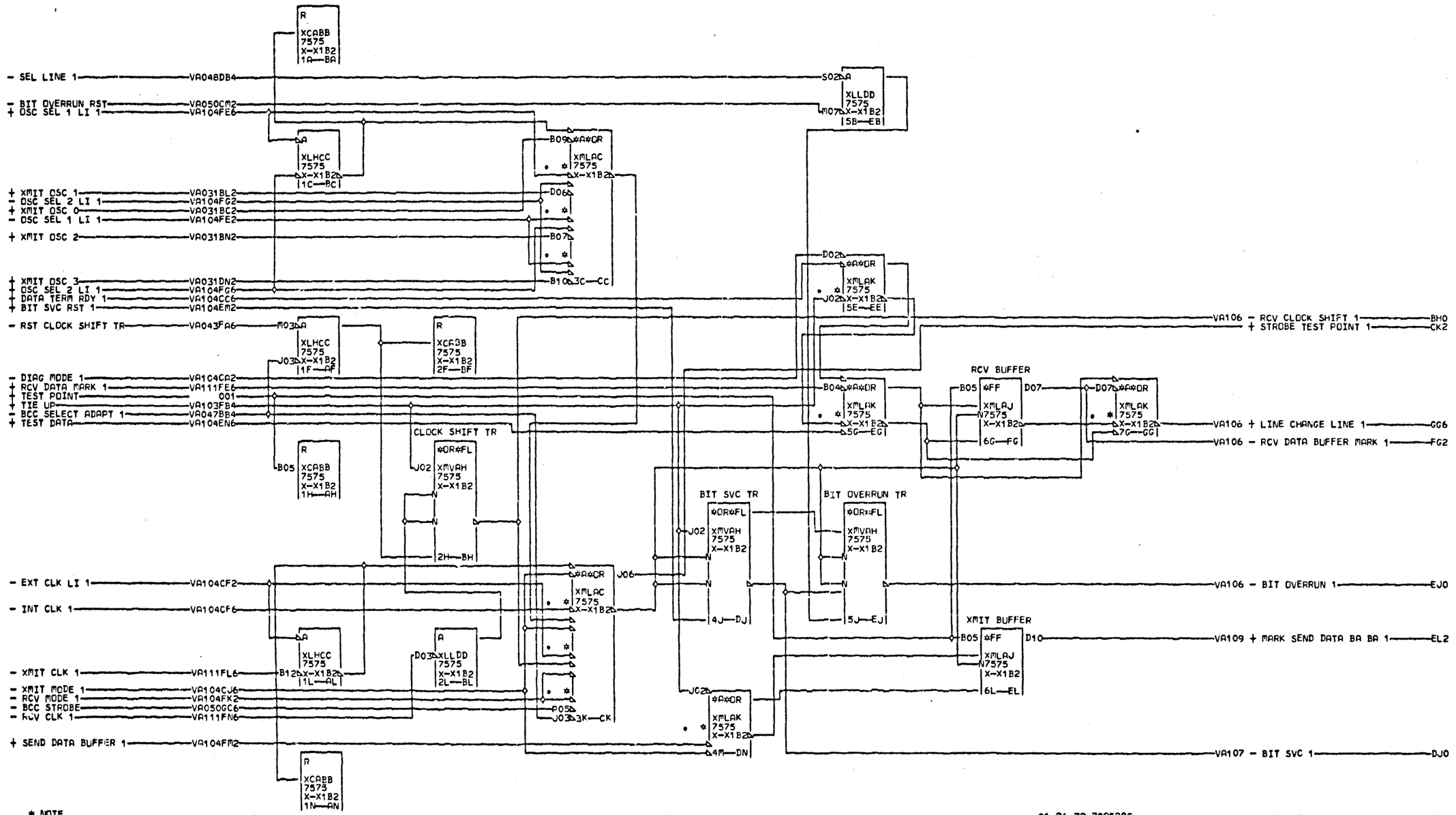

* NOTE
* FULL FEATURE WIRING SHOWN
V * WITH EIA SYNC LINE SET
A * AND LINE INTERFACE CARD
1 * PN 8211452 INSTALLED
0 * SEE VA000 FOR OTHER
5 * LINE SETS

000

01-26-72 309520C
11-11-74 311286

EIA SYNC LINE INTERFACE CARD		VA105
DATE 11-22-74 MACH. 27RNB		
LOG 400 FRAME 01		
P.N. 1785429		000
IBM CORP. SDD BLK. GH		

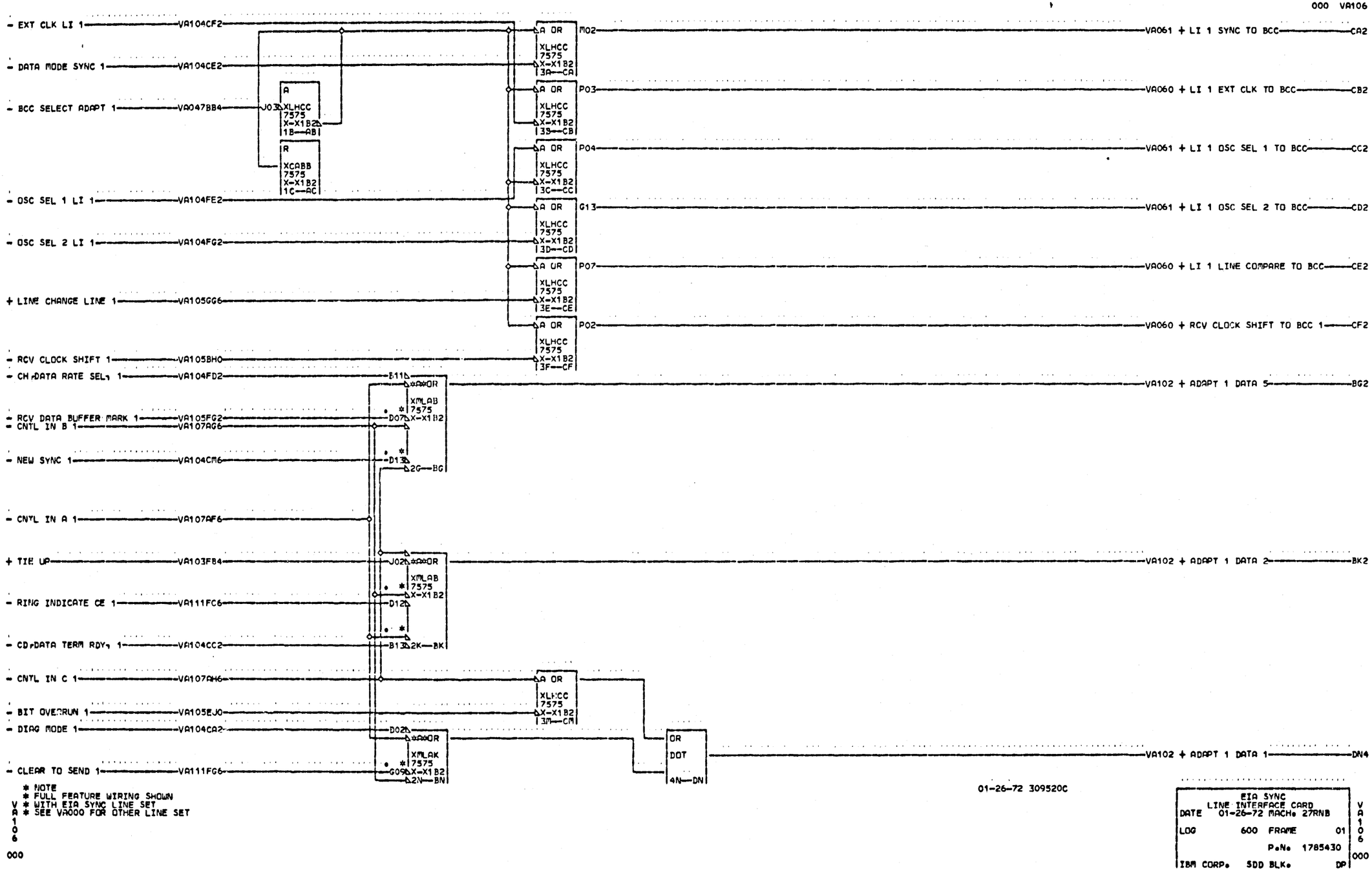

* NOTE
* FULL FEATURE WIRING SHOWN
* WITH EIA SYNC LINE SET
* SEE VA000 FOR OTHER LINE SET

VA106 000

01-26-72 309520C

EIA SYNC
LINE INTERFACE CARD
DATE 01-26-72 MACH. 27RNB
LOG 600 FRAME 01
P.N. 1785430
IBM CORP. SDD BLK. DP

VA106 000

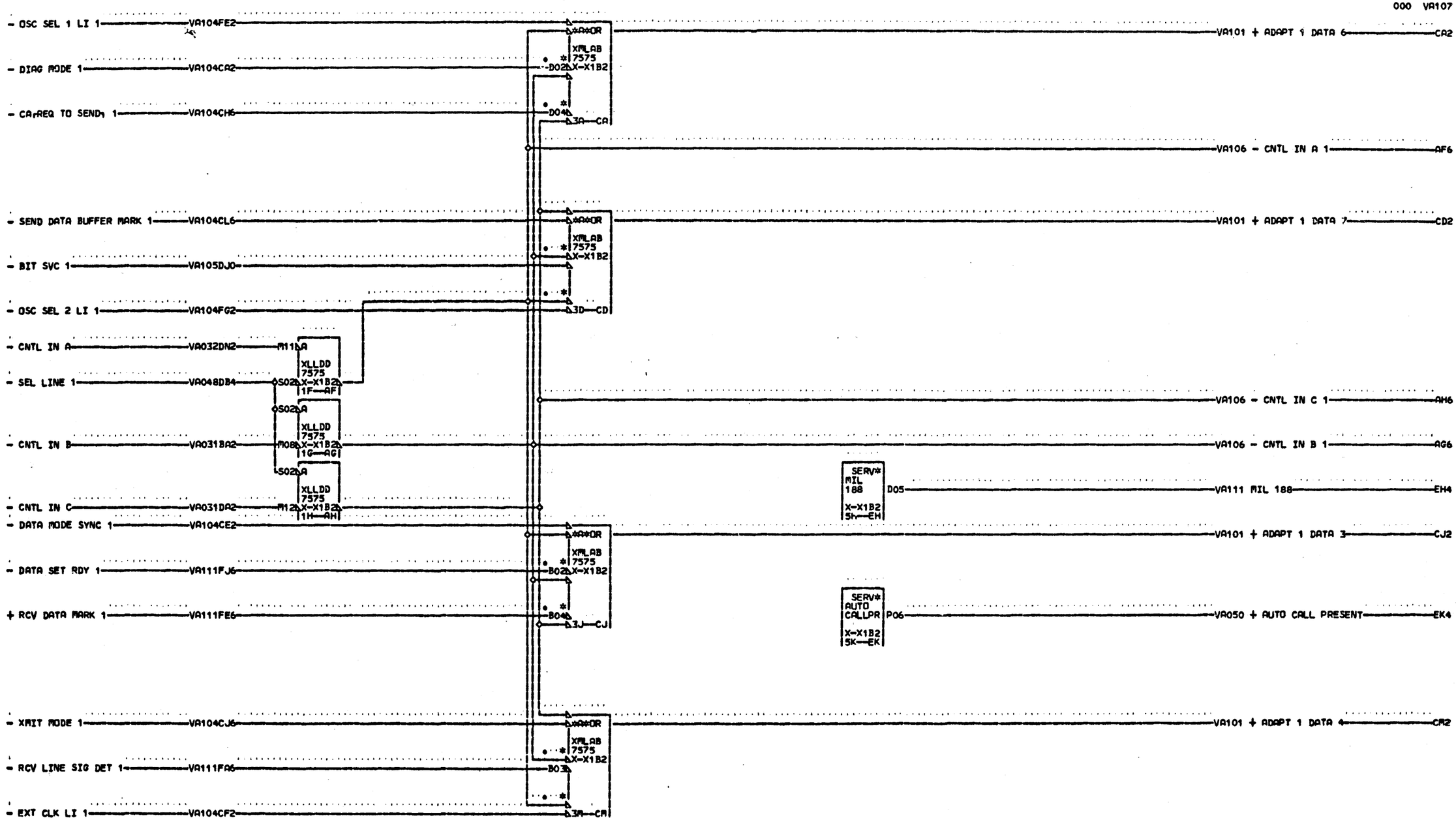

* NOTE
* FULL FEATURE WIRING SHOWN
* WITH EIA SYNC LINE SET
* SEE VA000 FOR OTHER LINE SET

VA107
000

01-26-72 309520C

EIA SYNC
LINE INTERFACE CARD
DATE 01-26-72 MACH. 27RNB
LOG 600 FRAME 01
P.N. 1785431
IBM CORP. SDD BLK. EL

VA107 000

000 VA109

- NEW SYNC 0 — VA100CM6 — D04 — MST EIA *CV-LD XXZAA 757326 X-X1M2 D09 6A—FA — VA110 + EIA NEW SYNC 0 — FA6
+ MARK SEND DATA BA BA 1 — VA105EL2 — G05 — MST EIA *CV-LD XXZAA 757317 X-X1M2 G02 4B—DB — VA111 - EIA XMIT DATA MARK 1 — DB6
- CA REQ TO SEND 1 — VA104CM6 — G10 — MST EIA *CV-LD XXZAA 757318 X-X1M2 G07 2C—BC — VA111 + EIA REQ TO SEND CA 1 — BC6
- NEW SYNC 1 — VA104CM6 — J04 — MST EIA *CV-LD XXZAA 757327 X-X1M2 J09 6D—FD — VA111 + EIA NEW SYNC 1 — FD6
- CD DATA TERM RDY 1 — VA104CC2 — J05 — MST EIA *CV-LD XXZAA 757319 X-X1M2 J03 4E—DE — VA111 + EIA DATA TERM RDY 1 — DE6
- CH DATA RATE SEL 1 — VA104FD2 — J10 — MST EIA *CV-LD XXZAA 75731A X-X1M2 J06 2F—BF — VA111 + EIA DATA RATE SEL 1 — BF6
- DIAG MODE 1 — VA104CA2 — G09 — MST EIA *CV-LD XXZAA 75731R X-X1M2 J11 6G—EG — VA111 + EIA MODEM WRAP 1 — EG6
+ MARK SEND DATA BA BA 0 — VA103EL2 — B05 — MST EIA *CV-LD XXZAA 75731B X-X1M2 B02 4H—DH — VA110 - EIA XMIT DATA MARK 0 — DH6
- CA REQ TO SEND 0 — VA100CH6 — B10 — MST EIA *CV-LD XXZAA 75731C X-X1M2 B07 2J—BJ — VA110 + EIA REQ TO SEND CA 0 — BJ6
- DIAG MODE 0 — VA100CA2 — B09 — MST EIA *CV-LD XXZAA 75731S X-X1M2 D11 6K—EK — VA110 + EIA MODEM WRAP 0 — EK6
- CD DATA TERM RDY 0 — VA100CC2 — D05 — MST EIA *CV-LD XXZAA 75731D X-X1M2 D03 4L—DL — VA110 + EIA DATA TERM RDY 0 — DL6
- CH DATA RATE SEL 0 — VA100FD2 — D10 — MST EIA *CV-LD XXZAA 75731E X-X1M2 D06 2M—BM — VA110 + EIA DATA RATE SEL 0 — BM6

* NOTE
* FULL FEATURE WIRING SHOWN
* WITH EIA SYNC LINE SET
* SEE VA000 FOR OTHER LINE SET

VA109 000

01-26-72 309520C

EIA SYNC DRIVER CARD
DATE 01-26-72 MACH. 27RNB
LOG 600 FRAME 01
P.N. 1785432
IBM CORP. SDD BLK. FF

VA109 000

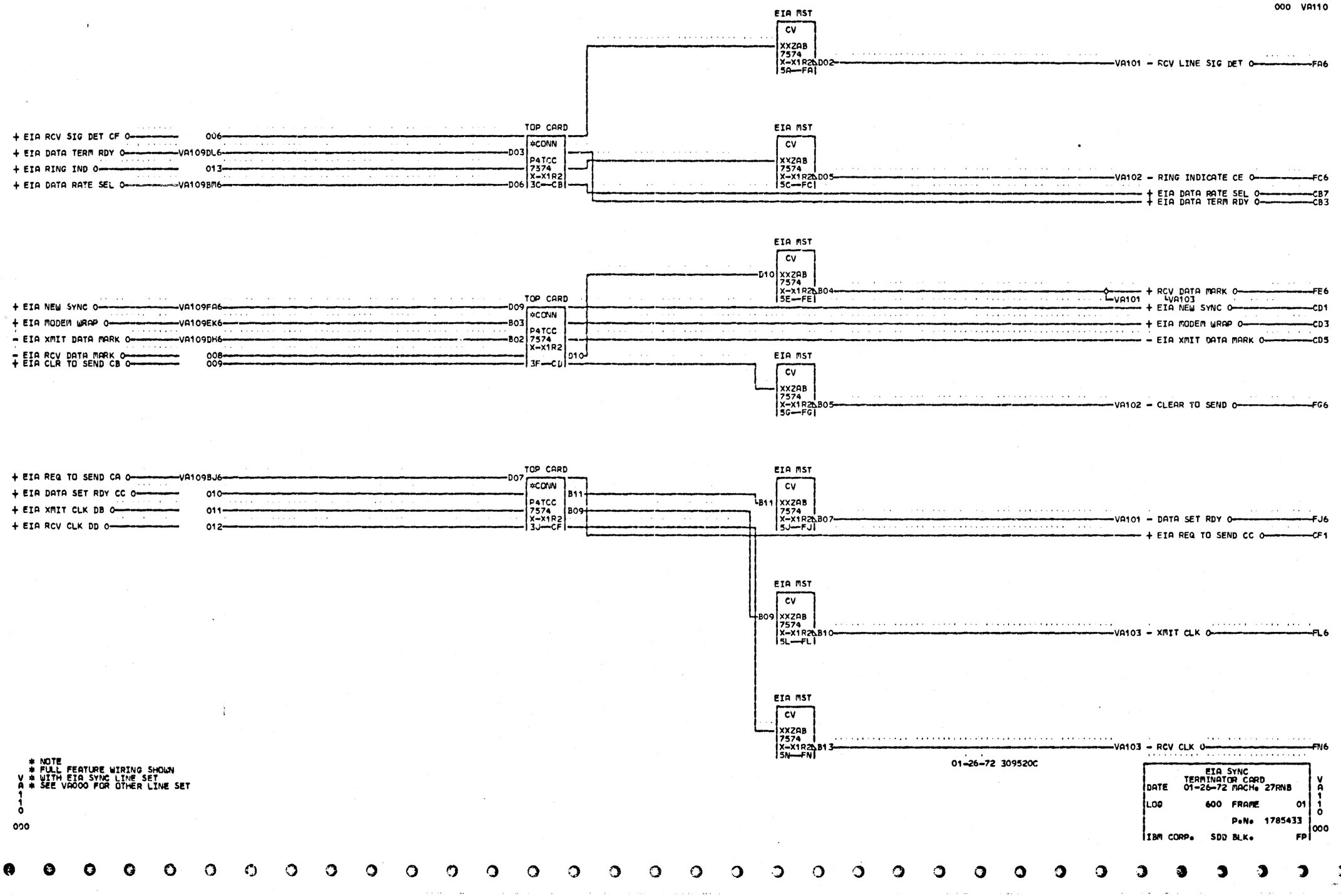

* NOTE
* FULL FEATURE WIRING SHOWN
* WITH EIA SYNC LINE SET
* SEE VA000 FOR OTHER LINE SET

VA110
000

01-26-72 309520C

EIA SYNC
TERMINATOR CARD
DATE 01-26-72 MACH. 27RNB
LOG 600 FRAME 01
P.N. 1785433
IBM CORP. SDD BLK. FP

VA110
000

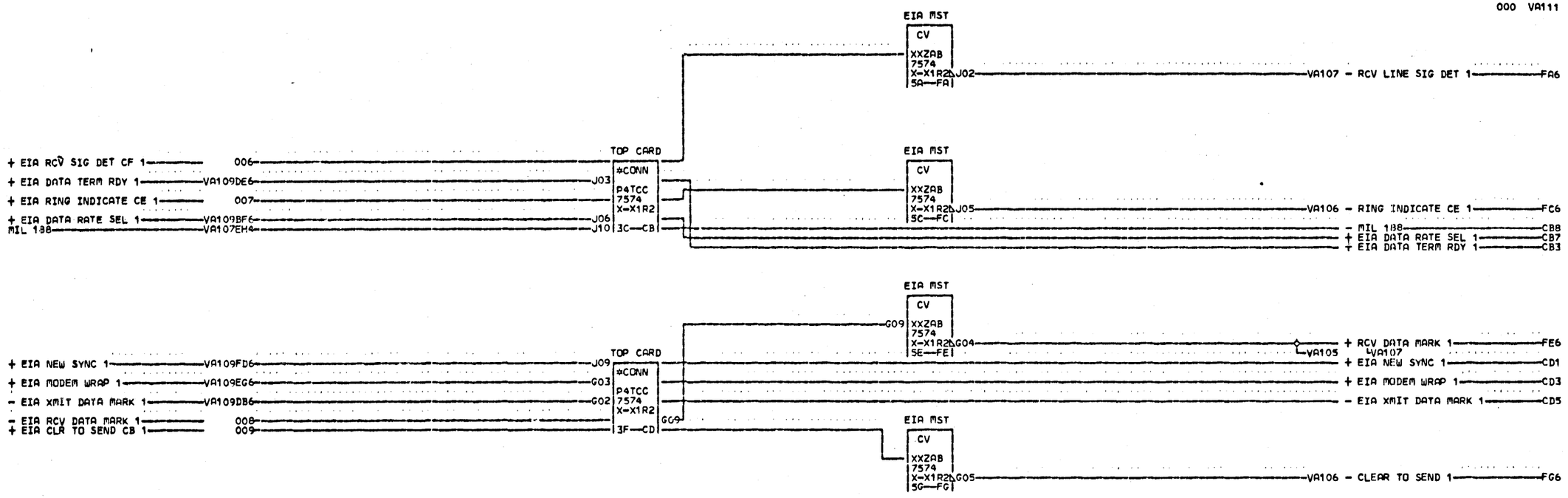

* NOTE
* FULL FEATURE WIRING SHOWN
* WITH EIA SYNC LINE SET
* SEE VA000 FOR OTHER LINE SET

V A 1 1 1
000

01-26-72 309520C

EIA SYNC
TERMINATOR CARD
DATE 01-26-72 MACH. 27RNB
LOG 600 FRAME 01
P.No. 1785434
IBM CORP. SDD BLK. FP

V A 1 1 1 000

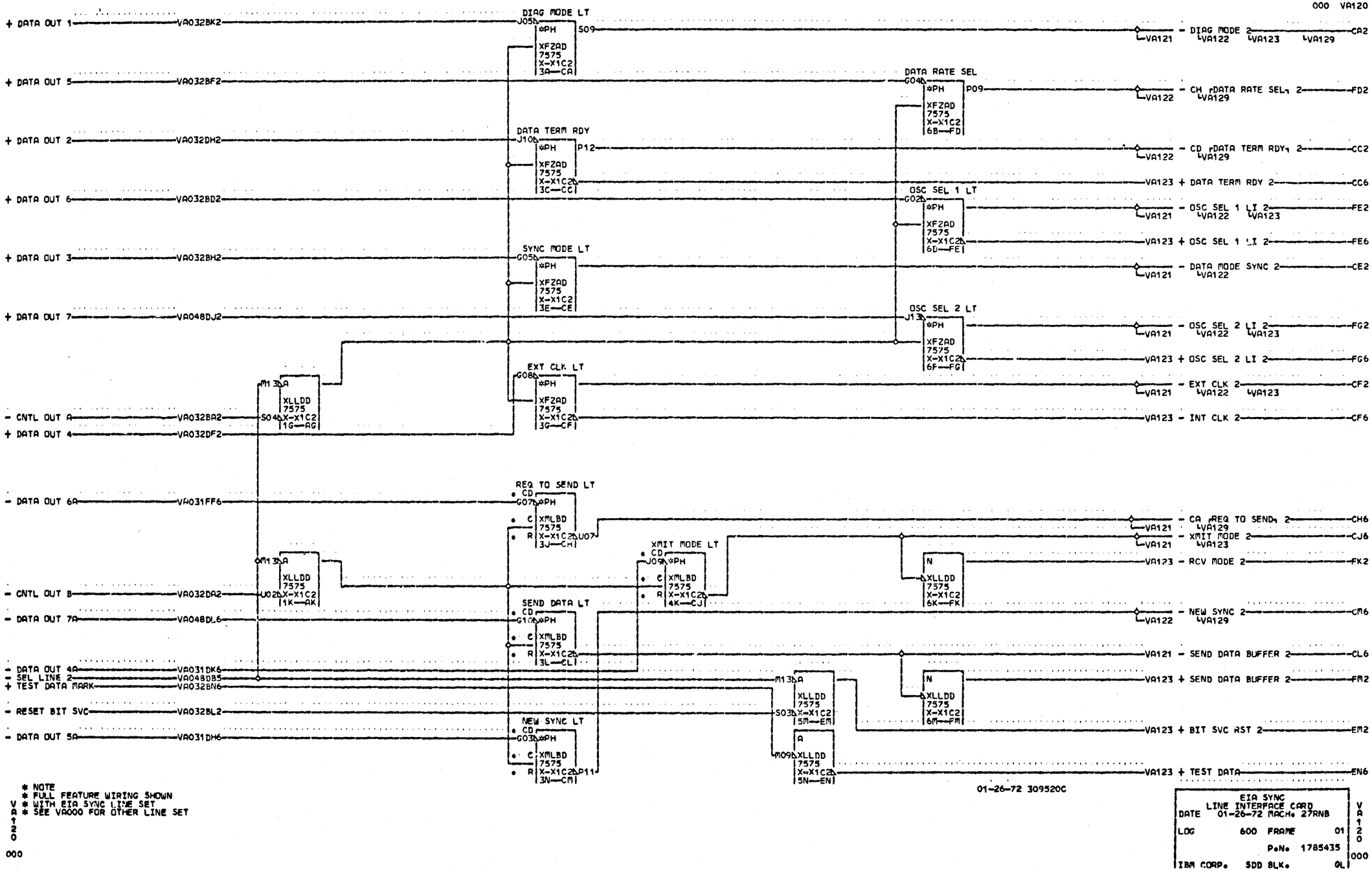
000 VA120
+ DATA OUT 1 VA032BK2
DIAG MODE LT J05 *PH S09 XFZAD 7575 X-X1C2 3A—CA
- DIAG MODE 2 CA2
VA121 VA122 VA123 VA129
+ DATA OUT 5 VA032BF2
DATA RATE SEL G04 *PH P09 XFZAD 7575 X-X1C2 6B—FD
- CH rDATA RATE SEL, 2 FD2
VA122 VA129
+ DATA OUT 2 VA032DH2
DATA TERM RDY J10 *PH P12 XFZAD 7575 X-X1C2 3C—CC
- CD rDATA TERM RDY, 2 CC2
VA122 VA129
VA123 + DATA TERM RDY 2 CC6
+ DATA OUT 6 VA032BD2
OSC SEL 1 LT G02 *PH XFZAD 7575 X-X1C2 6D—FE
- OSC SEL 1 LI 2 FE2
VA121 VA122 VA123
VA123 + OSC SEL 1 LI 2 FE6
+ DATA OUT 3 VA032BH2
SYNC MODE LT G05 *PH XFZAD 7575 X-X1C2 3E—CE
- DATA MODE SYNC 2 CE2
VA121 VA122
+ DATA OUT 7 VA048DJ2
OSC SEL 2 LT J13 *PH XFZAD 7575 X-X1C2 6F—FG
- OSC SEL 2 LI 2 FG2
VA121 VA122 VA123
VA123 + OSC SEL 2 LI 2 FG6
EXT CLK LT G08 *PH XFZAD 7575 X-X1C2 3G—CF
- EXT CLK 2 CF2
VA121 VA122 VA123
M13 A XLLDD 7575 X-X1C2 1G—AG
- CNTL OUT A VA032BA2 S04
+ DATA OUT 4 VA032DF2
VA123 - INT CLK 2 CF6
REQ TO SEND LT G07 *PH XMLBD 7575 R X-X1C2 3J—CH U07
- DATA OUT 6A VA031FF6
- CA rREQ TO SEND, 2 CH6
VA121 VA129
- XMIT MODE 2 CJ6
VA121 VA123
XMIT MODE LT J09 *PH XMLBD 7575 R X-X1C2 4K—CJ
M13 A XLLDD 7575 X-X1C2 1K—AK U02
- CNTL OUT B VA032DA2
N XLLDD 7575 X-X1C2 6K—FK
VA123 - RCV MODE 2 FK2
SEND DATA LT G10 *PH XMLBD 7575 R X-X1C2 3L—CL
- DATA OUT 7A VA048DL6
- NEW SYNC 2 CM6
VA122 VA129
VA121 - SEND DATA BUFFER 2 CL6
- DATA OUT 4A VA031DK6
- SEL LINE 2 VA048DB5
+ TEST DATA MARK VA032BN6
M13 A XLLDD 7575 X-X1C2 5M—EM S03
N XLLDD 7575 X-X1C2 6M—FM
VA123 + SEND DATA BUFFER 2 FM2
- RESET BIT SVC VA032BL2
VA123 + BIT SVC RST 2 EM2
NEW SYNC LT G03 *PH XMLBD 7575 R X-X1C2 3N—CM P11
- DATA OUT 5A VA031DH6
M09 A XLLDD 7575 X-X1C2 5N—EN
VA123 + TEST DATA EN6
* NOTE
* FULL FEATURE WIRING SHOWN
* WITH EIA SYNC LINE SET
* SEE VA000 FOR OTHER LINE SET
V A 1 2 0
000
01-26-72 309520C
EIA SYNC
LINE INTERFACE CARD
DATE 01-26-72 MACH. 27RNB
LOG 600 FRAME 01
P.N. 1785435
IBM CORP. SDD BLK. 0L
V A 1 2 0 000

000 VA121

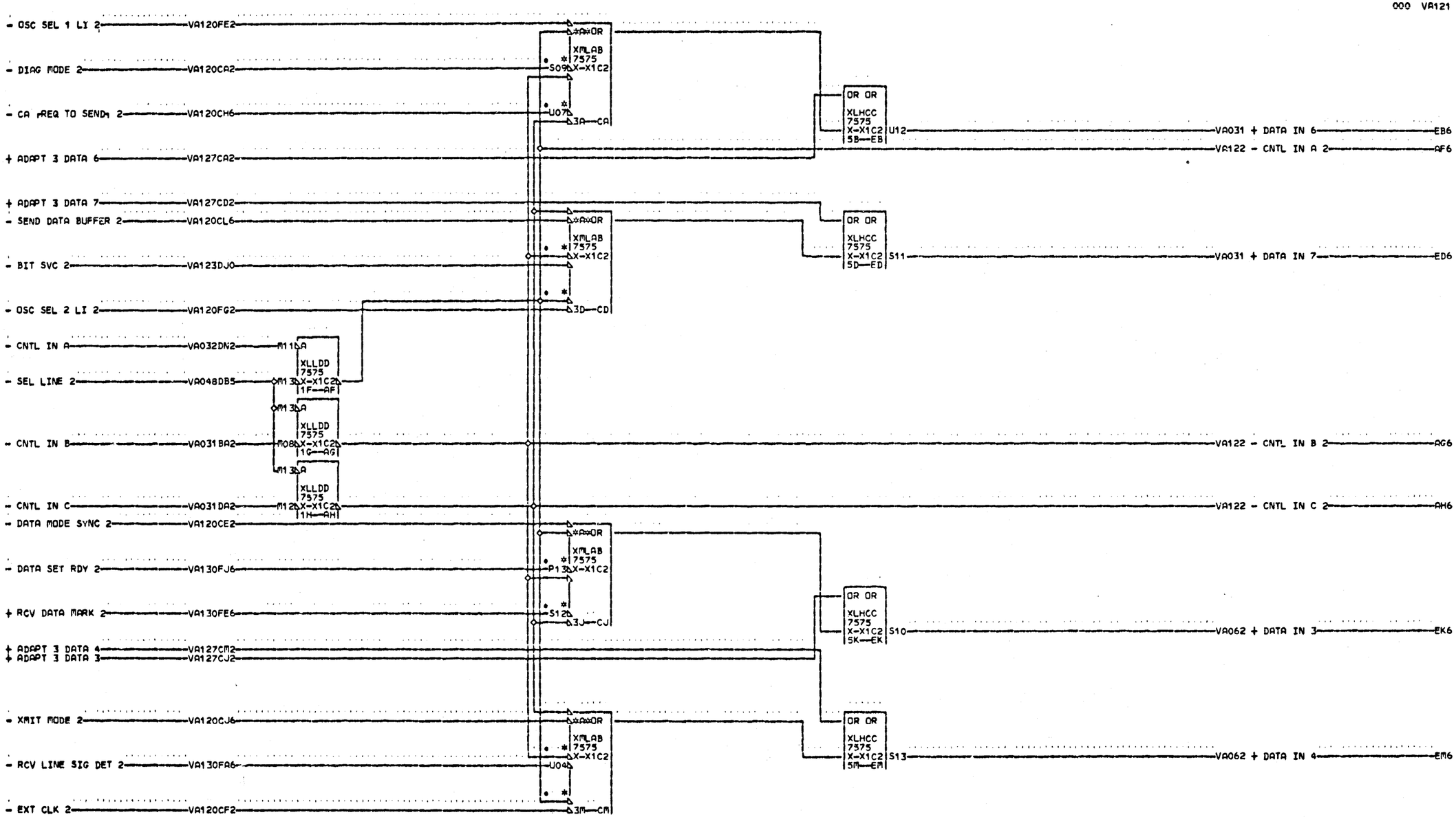

* NOTE
* FULL FEATURE WIRING SHOWN
V * WITH EIA SYNC LINE SET
A * SEE VA000 FOR OTHER LINE SET
1
2
1
000

01-26-72 309520C

EIA SYNC
LINE INTERFACE CARD
DATE 01-26-72 MACH. 27RNB

LOG 600 FRAME 01

P.N. 1785436

IBM CORP. SDD BLK. EN

V A 1 2 1 000

000 VA122

- EXT CLK 2 — VA120CF2 — A OR XLHCC 7575 X-X1C2 3A—CA — M02 — VA061 + LI 2 SYNC TO BCC — CA2
- DATA MODE SYNC 2 — VA120CE2 — A OR XLHCC 7575 X-X1C2 3B—CB — P03 — VA060 + LI 2 EXT CLK TO BCC — CB2
- BCC SELECT ADAPT 2 — VA047BB5 — P10 — A XLHCC 7575 X-X1C2 1B—AB; R XCABB 7575 X-X1C2 1C—AC
- OSC SEL 1 LI 2 — VA120FE2 — A OR XLHCC 7575 X-X1C2 3C—CC — P04 — VA061 + LI 2 OSC SEL 1 TO BCC — CC2
- OSC SEL 2 LI 2 — VA120FG2 — A OR XLHCC 7575 X-X1C2 3D—CD — G13 — VA061 + LI 2 OSC SEL 2 TO BCC — CD2
+ LINE CHANGE LI 2 — VA123GG6 — A OR XLHCC 7575 X-X1C2 3E—CE — P07 — VA060 + LI 2 LINE COMPARE TO BCC — CE2
- RCV CLOCK SHIFT 2 — VA123BH0 — A OR XLHCC 7575 X-X1C2 3F—CF — P02 — VA060 + RCV CLOCK SHIFT TO BCC 2 — CF2
- CH rDATA RATE SEL┐ 2 — VA120FD2 — P09 — *A*OR XMLAB 7575 X-X1C2 2G—BG
- RCV DATA BUFFER MARK 2 — VA123FG2 — M04
- CNTL IN B 2 — VA121AG6
- NEW SYNC 2 — VA120CM6 — P11
- BIT OVERRUN 2 — VA123EJ0
+ ADAPT 3 DATA 5 — VA126BG2
+ ADAPT 3 DATA 2 — VA126BK2
- CNTL IN C 2 — VA121AH6
- CNTL IN A 2 — VA121AF6
+ TIE UP — VA123F84 — J02 — *A*OR XMLAB 7575 X-X1C2 2K—BK
- RING INDICATE CE 2 — VA130FC6 — M10
- CD rDATA TERM RDY┐ 2 — VA120CC2 — P12
+ ADAPT 3 DATA 1 — VA126DN4
- DIAG MODE 2 — VA120CA2 — S09 — *A*OR XMLAK 7575 X-X1C2 2N—BN
- CLEAR TO SEND 2 — VA130FG6 — J11

OR OR XLHCC 7575 X-X1C2 4C—DG — U13 — VA062 + DATA IN 5 — DG6

OR OR XLHCC 7575 X-X1C2 4J—DJ — U10 — VA062 + DATA IN 2 — DJ6

A OR XLHCC 7575 X-X1C2 4K—DK

OR DOT 5M—EM

OR OR XLHCC 7575 X-X1C2 6M—DM — U09 — VA062 + DATA IN 1 — DM6

* NOTE
* FULL FEATURE WIRING SHOWN
* WITH EIA SYNC LINE SET
* SEE VA000 FOR OTHER LINE SET

VA122
000

01-26-72 309520C

EIA SYNC
LINE INTERFACE CARD
DATE 01-26-72 MACH. 27RNB
LOG 600 FRAME 01
P.N. 1785437
IBM CORP. SDD BLK. EN

VA122 000

000 VA123

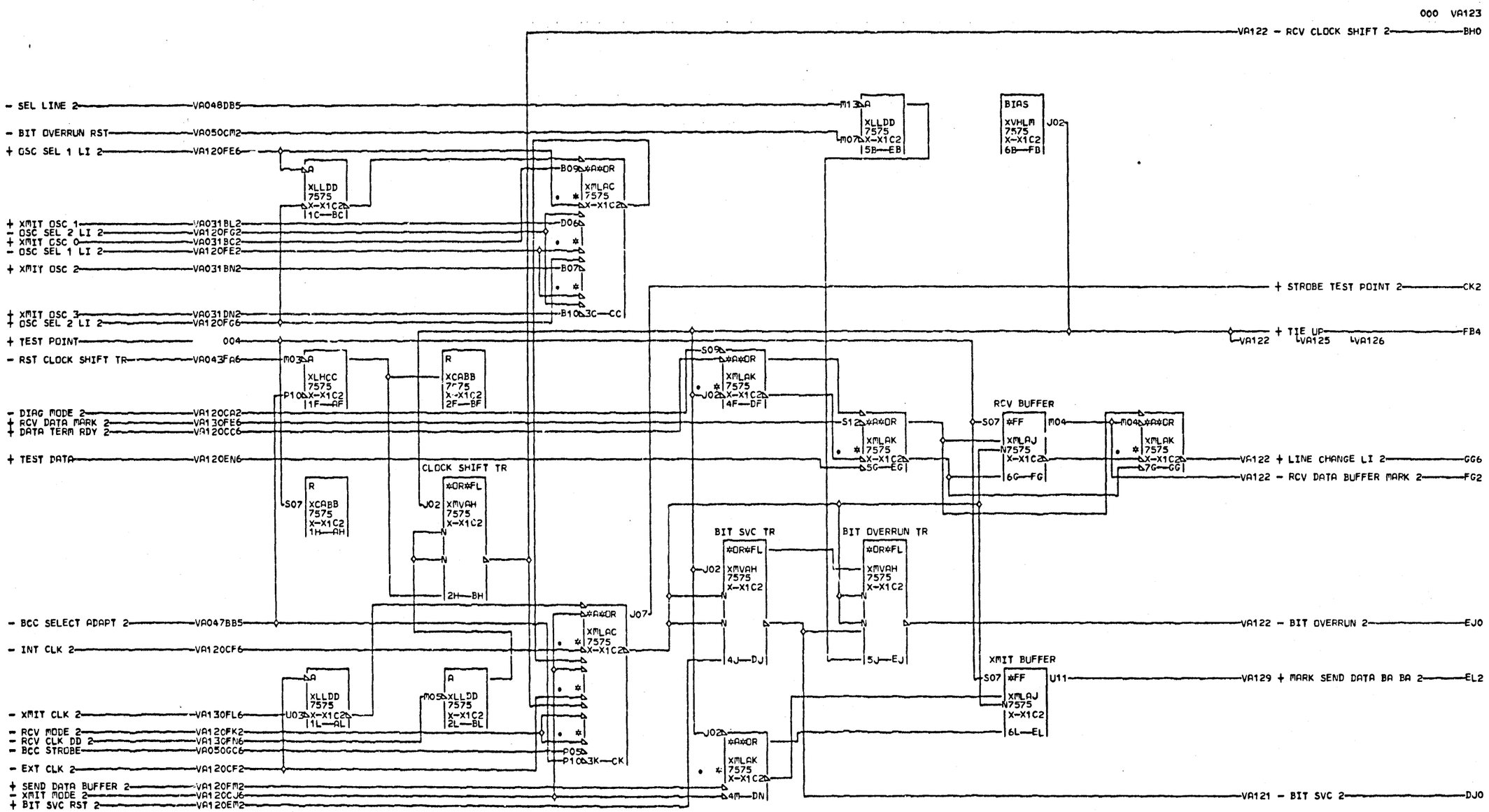

* NOTE
* FULL FEATURE WIRING SHOWN
V * WITH EIA SYNC LINE SET
A * AND LINE INTERFACE CARD
1 * PN 8211452 INSTALLED
2 * SEE VA000 FOR OTHER
3 * LINE SETS

000

01-26-72 309520C
11-11-74 311286

EIA SYNC LINE INTERFACE CARD				V
DATE 11-22-74 MACH. 27RNB				A
LOG	400	FRAME	01	1
				2
		P.N. 1785438		3
IBM CORP.	SDD BLK.		GH	000

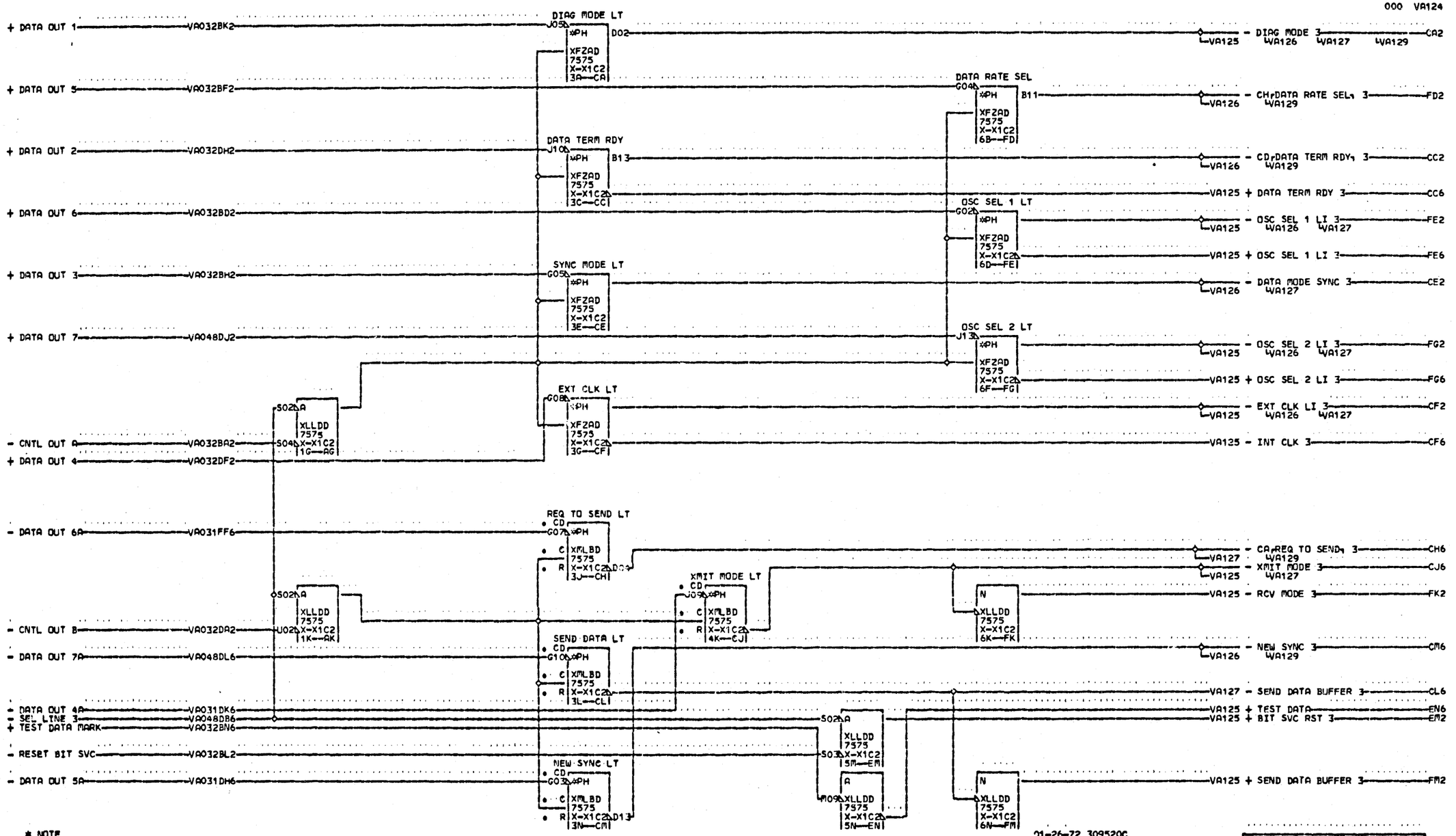

* NOTE
* FULL FEATURE WIRING SHOWN
* WITH EIA SYNC LINE SET
* SEE VA000 FOR OTHER LINE SET

000

01-26-72 3095200

EIA SYNC
LINE INTERFACE CARD
DATE 01-26-72 MACH. 27RNB
LOG 600 FRAME 01
P.N. 1785439
IBM CORP. SDD BLK. GL

V A 1 2 4 000

000 VA125

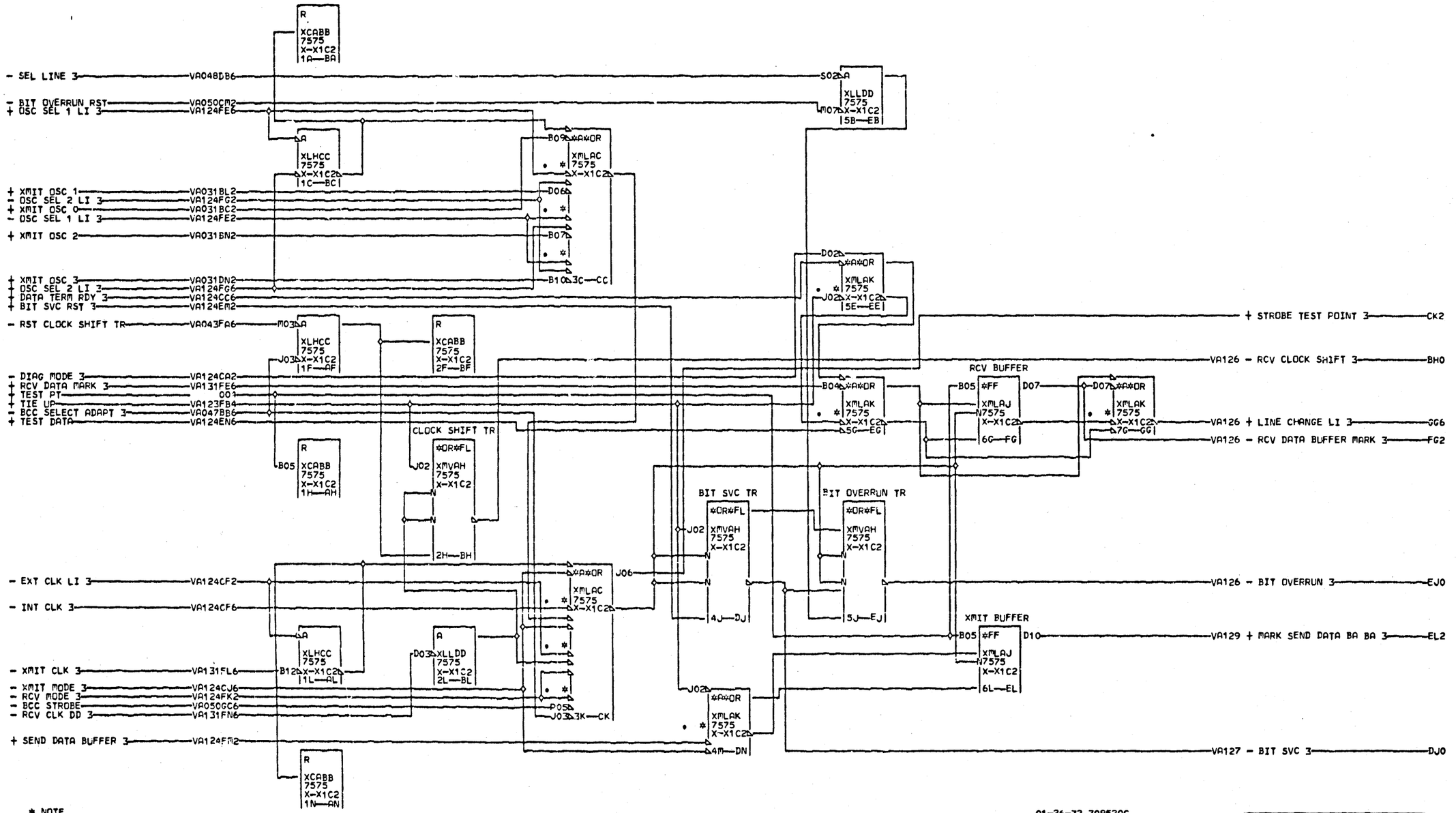

* NOTE
* FULL FEATURE WIRING SHOWN
V * WITH EIA SYNC LINE SET
A * AND LINE INTERFACE CARD
1 * PN 8211452 INSTALLED
2 * SEE VA000 FOR OTHER
5 * LINE SETS

000

01-26-72 309520C
11-11-74 311286

EIA SYNC LINE INTERFACE CARD			VA125
DATE 11-22-74 MACH. 27RNB			
LOG 400	FRAME	01	
	P.N. 1785440		
IBM CORP. SDD BLK.		GH	000

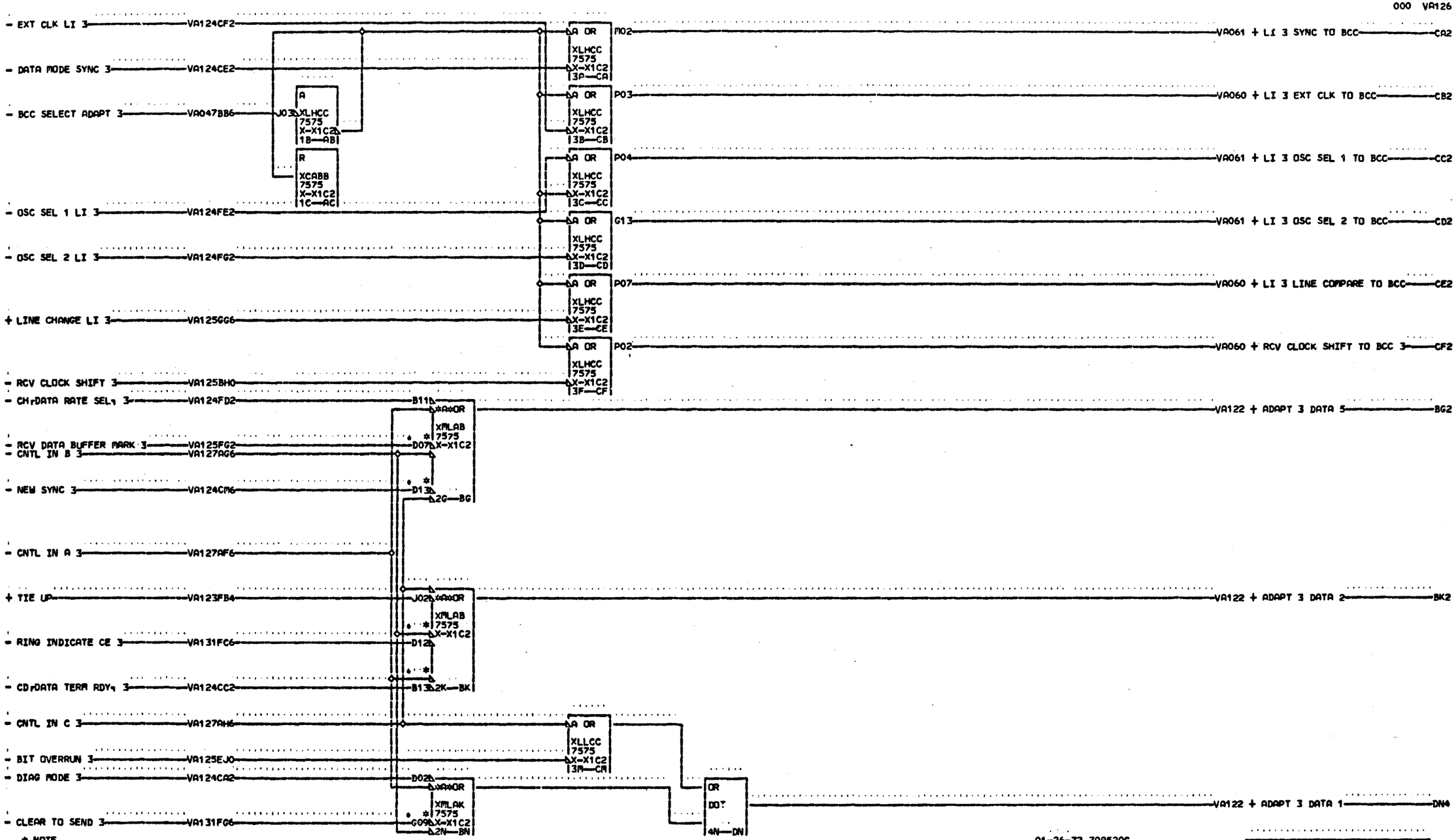

* NOTE
* FULL FEATURE WIRING SHOWN
* WITH EIA SYNC LINE SET
* SEE VA000 FOR OTHER LINE SET

01-26-72 309520C

EIA SYNC
LINE INTERFACE CARD
DATE 01-26-72 MACH. 27RNB
LOG 600 FRAME 01
P.N. 1785441
IBM CORP. SDD BLK. DP

VA126 000

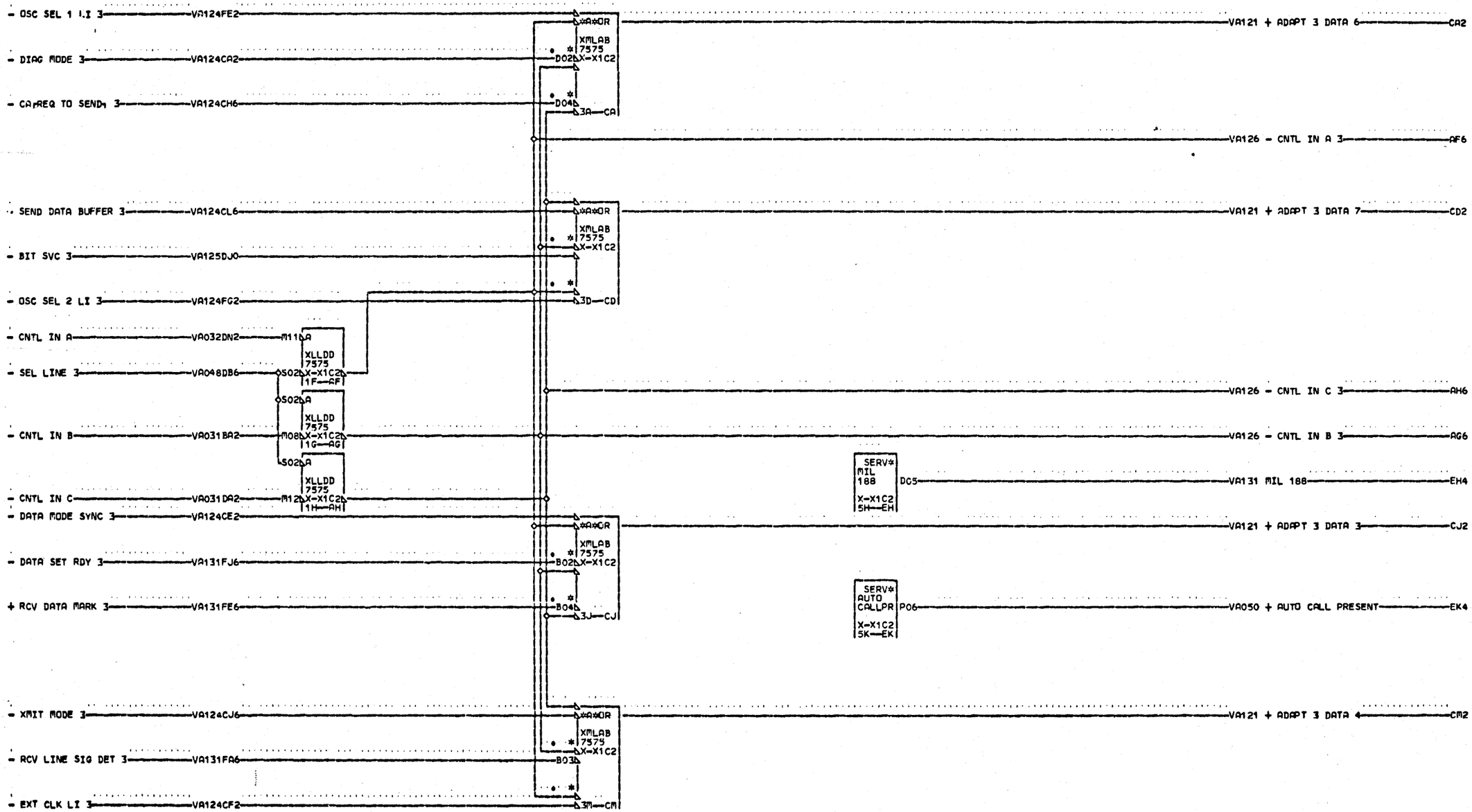

* NOTE
* FULL FEATURE WIRING SHOWN
* WITH EIA SYNC LINE SET
* SEE VA000 FOR OTHER LINE SET

000

01-26-72 309520C

EIA SYNC
LINE INTERFACE CARD
DATE 01-26-72 MACH. 27RNB
LOG 600 FRAME 01
P.No. 1785442
IBM CORP. SDD BLK. EL

VA127 000

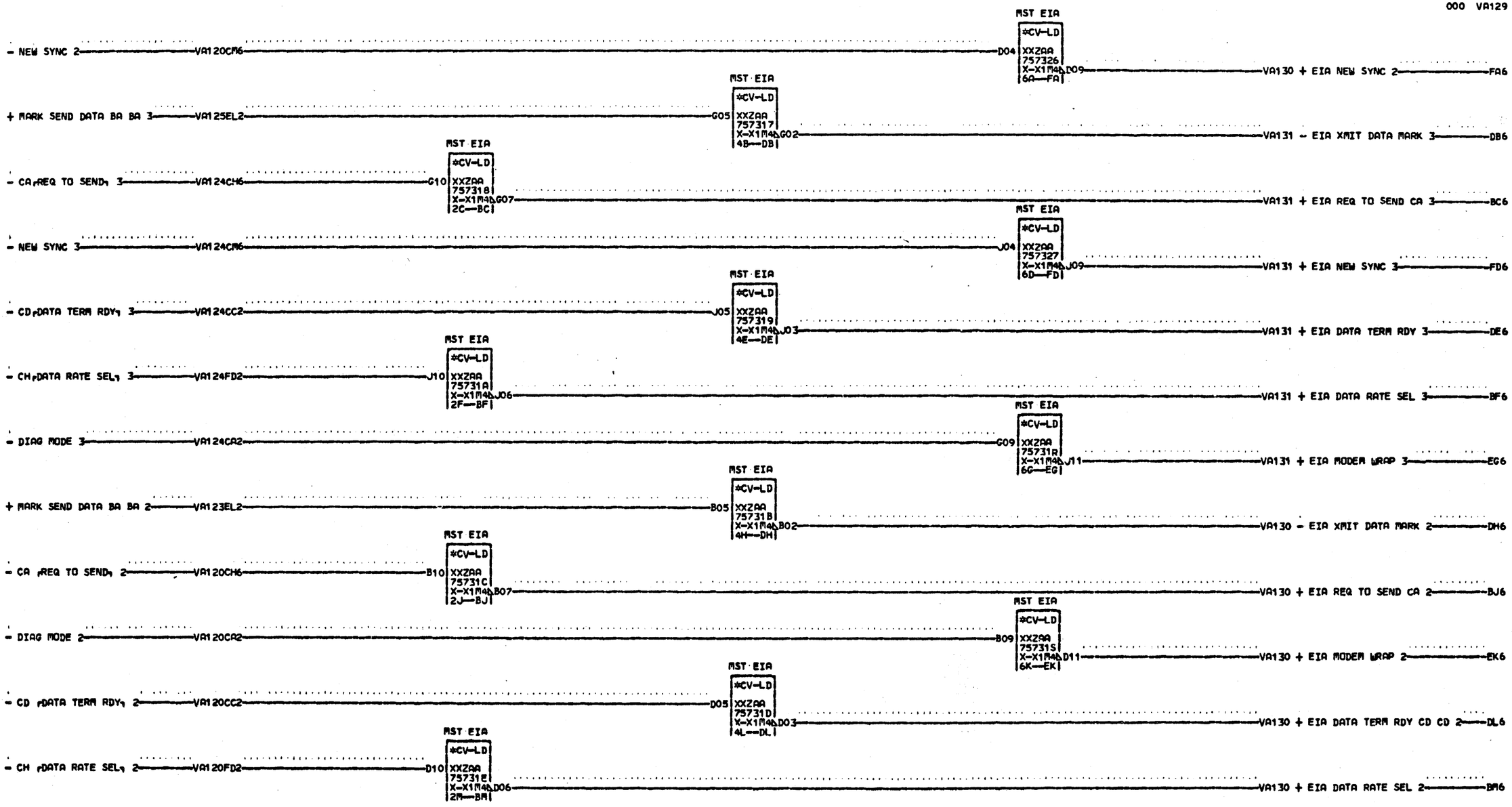

* NOTE
* FULL FEATURE WIRING SHOWN
V * WITH EIA SYNC LINE SET
A * SEE VA000 FOR OTHER LINE SET
1
2
9
000

01-26-72 309520C

EIA SYNC
DRIVER CARD
DATE 01-26-72 MACH. 27RNB
LOG 600 FRAME 01
P.N. 1785443
IBM CORP. SDD BLK. FF

V A 1 2 9 000

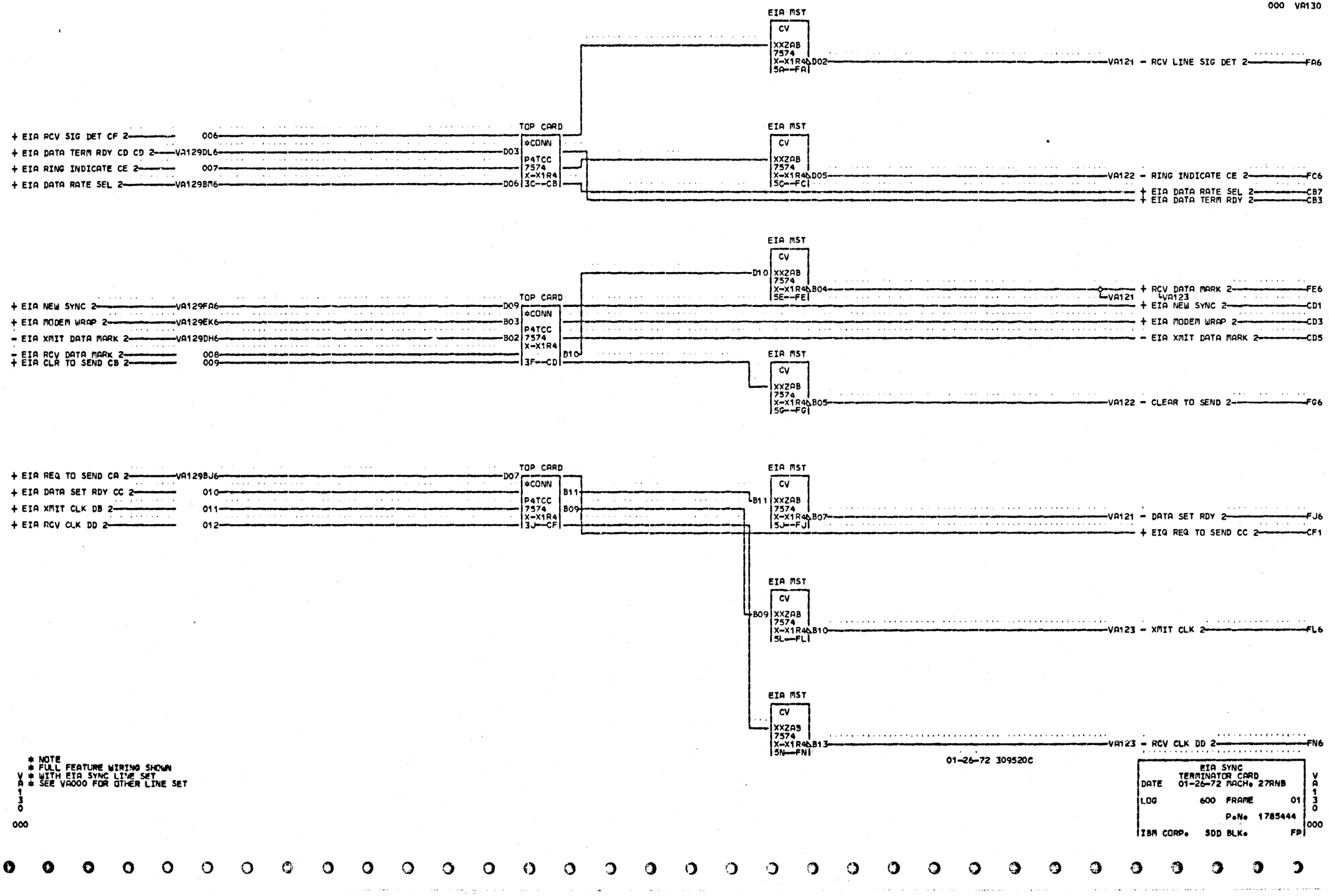

* NOTE
* FULL FEATURE WIRING SHOWN
* WITH EIA SYNC LINE SET
* SEE VA000 FOR OTHER LINE SET

VA130 000

01-26-72 309520C

EIA SYNC
TERMINATOR CARD
DATE 01-26-72 MACH. 27RNB
LOG 600 FRAME 01
P.N. 1785444
IBM CORP. SDD BLK. FP

VA130 000

000 VA131

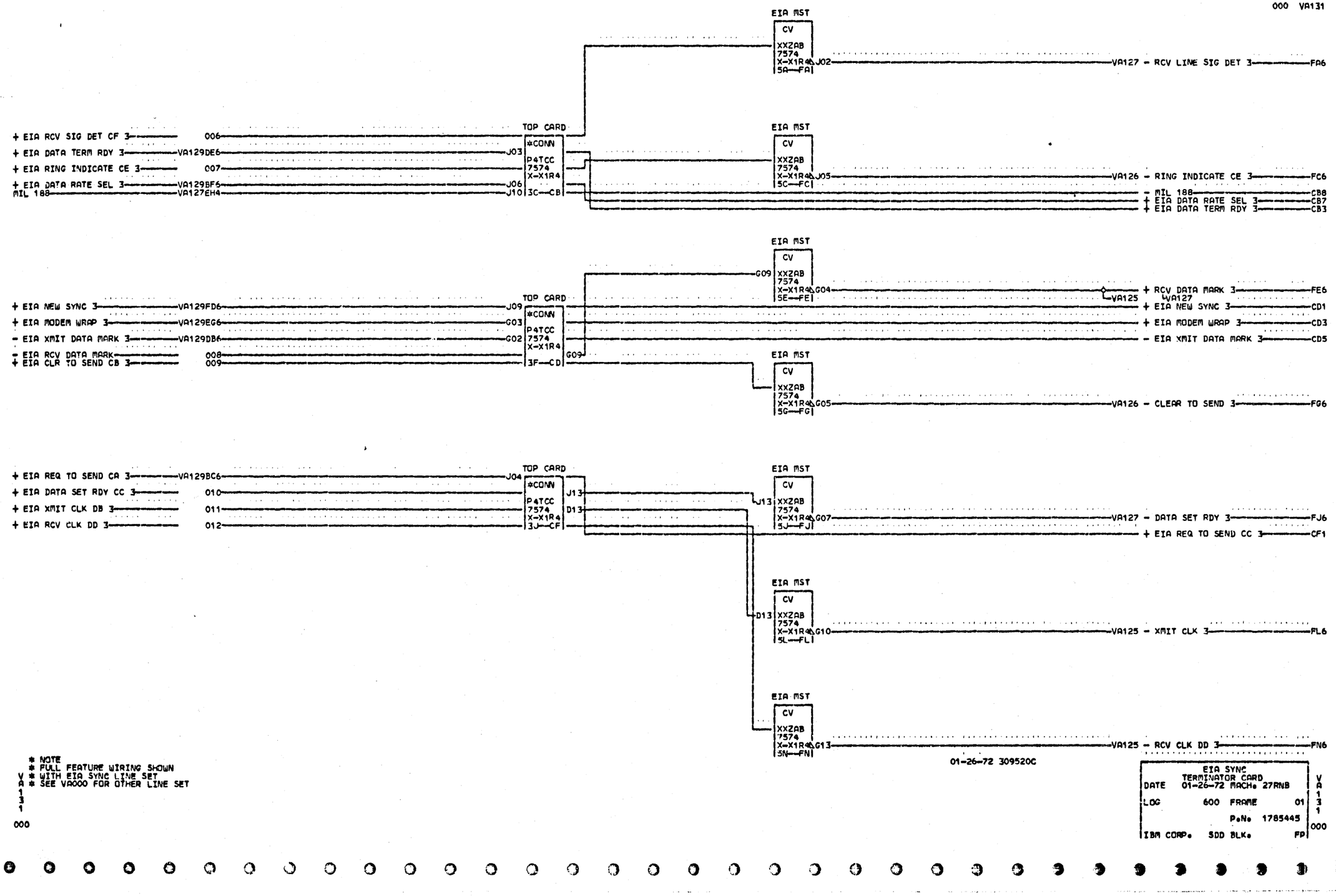
EIA MST
CV
XXZAB
7574
X-X1R4
5A—FA
J02
VA127 - RCV LINE SIG DET 3
FA6
TOP CARD
*CONN
P4TCC
7574
X-X1R4
3C—CB
+ EIA RCV SIG DET CF 3
006
+ EIA DATA TERM RDY 3
VA129DE6
J03
+ EIA RING INDICATE CE 3
007
+ EIA DATA RATE SEL 3
VA129BF6
J06
MIL 188
VA127EH4
J10
5C—FC
J05
VA126 - RING INDICATE CE 3
FC6
- MIL 188
CB8
+ EIA DATA RATE SEL 3
CB7
+ EIA DATA TERM RDY 3
CB3
5E—FE
G09
G04
VA125
VA127
+ RCV DATA MARK 3
FE6
+ EIA NEW SYNC 3
VA129FD6
J09
CD1
+ EIA MODEM WRAP 3
VA129EG6
G03
CD3
- EIA XMIT DATA MARK 3
VA129DB6
G02
CD5
- EIA RCV DATA MARK
008
+ EIA CLR TO SEND CB 3
009
3F—CD
5G—FG
G05
VA126 - CLEAR TO SEND 3
FG6
+ EIA REQ TO SEND CA 3
VA129BC6
J04
+ EIA DATA SET RDY CC 3
010
+ EIA XMIT CLK DB 3
011
+ EIA RCV CLK DD 3
012
3J—CF
J13
D13
5J—FJ
G07
VA127 - DATA SET RDY 3
FJ6
+ EIA REQ TO SEND CC 3
CF1
5L—FL
G10
VA125 - XMIT CLK 3
FL6
5N—FN
G13
VA125 - RCV CLK DD 3
FN6
* NOTE
* FULL FEATURE WIRING SHOWN
* WITH EIA SYNC LINE SET
* SEE VA000 FOR OTHER LINE SET
V A 1 3 1
000
01-26-72 309520C
EIA SYNC
TERMINATOR CARD
DATE 01-26-72 MACH. 27RNB
LOG 600 FRAME 01
P.N. 1785445
IBM CORP. SDD BLK. FP
V A 1 3 1 000

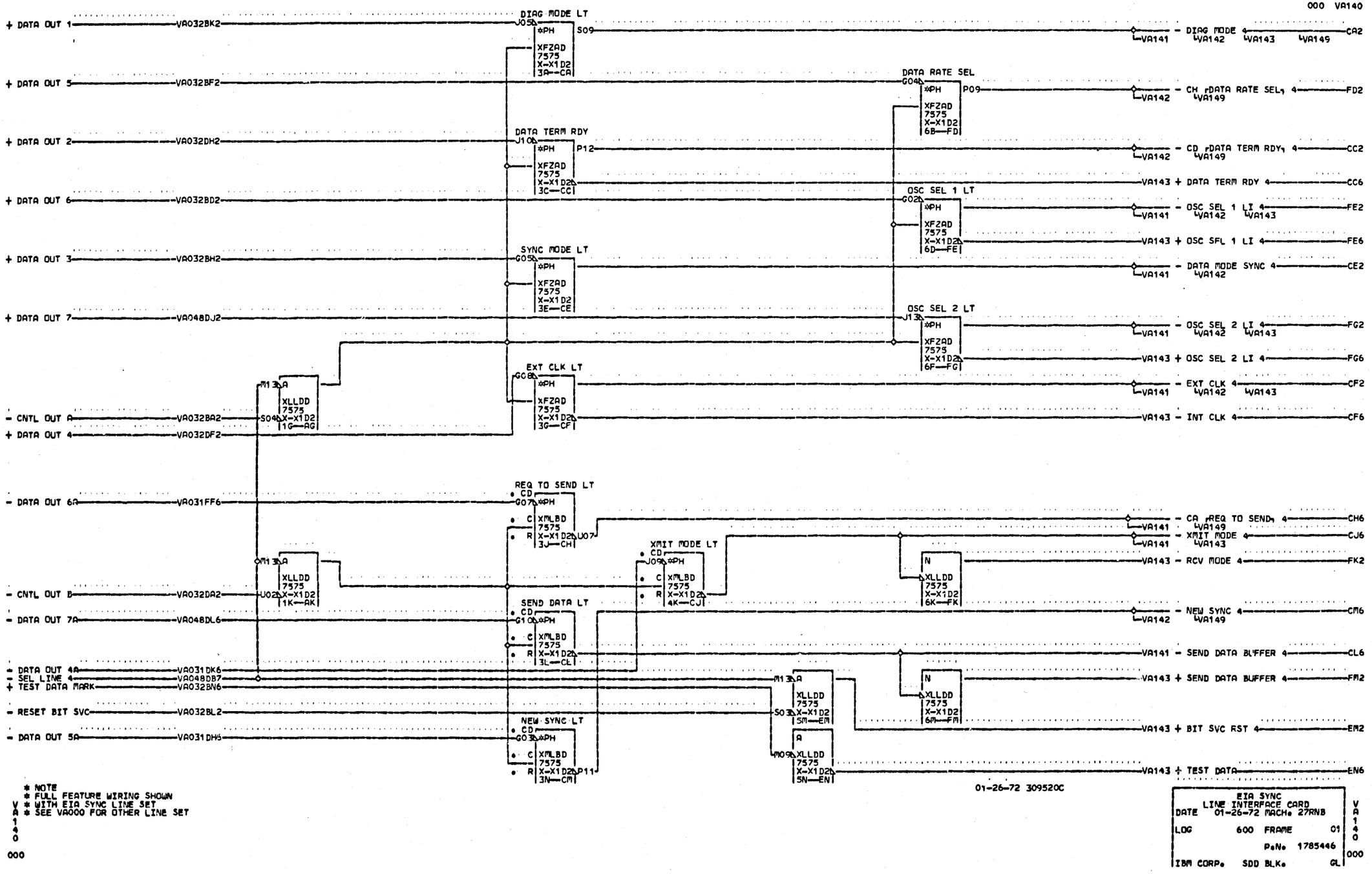
+ DATA OUT 1 VA032BK2
DIAG MODE LT J05 *PH XFZAD 7575 X-X1D2 3A—CA S09
- DIAG MODE 4 CA2
VA141 VA142 VA143 VA149
+ DATA OUT 5 VA032BF2
DATA RATE SEL G04 *PH XFZAD 7575 X-X1D2 6B—FD P09
- CH rDATA RATE SEL, 4 FD2
VA142 VA149
+ DATA OUT 2 VA032DH2
DATA TERM RDY J10 *PH XFZAD 7575 X-X1D2 3C—CC P12
- CD rDATA TERM RDY, 4 CC2
VA142 VA149
VA143 + DATA TERM RDY 4 CC6
+ DATA OUT 6 VA032BD2
OSC SEL 1 LT G02 *PH XFZAD 7575 X-X1D2 6D—FE
- OSC SEL 1 LI 4 FE2
VA141 VA142 VA143
VA143 + OSC SEL 1 LI 4 FE6
+ DATA OUT 3 VA032BH2
SYNC MODE LT G05 *PH XFZAD 7575 X-X1D2 3E—CE
- DATA MODE SYNC 4 CE2
VA141 VA142
+ DATA OUT 7 VA048DJ2
OSC SEL 2 LT J13 *PH XFZAD 7575 X-X1D2 6F—FG
- OSC SEL 2 LI 4 FG2
VA141 VA142 VA143
VA143 + OSC SEL 2 LI 4 FG6
EXT CLK LT G06 *PH XFZAD 7575 X-X1D2 3G—CF
- EXT CLK 4 CF2
VA141 VA142 VA143
M13 A XLLDD 7575 X-X1D2 1G—AG
- CNTL OUT A VA032BA2 S04
+ DATA OUT 4 VA032DF2
VA143 - INT CLK 4 CF6
REQ TO SEND LT G07 *PH XMLBD 7575 X-X1D2 3J—CH U07
- DATA OUT 6A VA031FF6
- CA rREQ TO SEND, 4 CH6
VA141 VA149
XMIT MODE LT J09 *PH XMLBD 7575 X-X1D2 4K—CJ
- XMIT MODE 4 CJ6
VA141 VA143
M13 A XLLDD 7575 X-X1D2 1K—AK U02
- CNTL OUT B VA032DA2
N XLLDD 7575 X-X1D2 6K—FK
VA143 - RCV MODE 4 FK2
SEND DATA LT G10 *PH XMLBD 7575 X-X1D2 3L—CL
- DATA OUT 7A VA048DL6
- NEW SYNC 4 CM6
VA142 VA149
VA141 - SEND DATA BUFFER 4 CL6
- DATA OUT 4A VA031DK6
- SEL LINE 4 VA048DB7
+ TEST DATA MARK VA032BN6
M13 A XLLDD 7575 X-X1D2 5M—EM
N XLLDD 7575 X-X1D2 6M—FM
VA143 + SEND DATA BUFFER 4 FM2
- RESET BIT SVC VA032BL2 S03
NEW SYNC LT G03 *PH XMLBD 7575 X-X1D2 3N—CM P11
- DATA OUT 5A VA031DH5
M09 A XLLDD 7575 X-X1D2 5N—EN
VA143 + BIT SVC RST 4 EM2
VA143 + TEST DATA EN6
* NOTE
* FULL FEATURE WIRING SHOWN
* WITH EIA SYNC LINE SET
* SEE VA000 FOR OTHER LINE SET
01-26-72 309520C
EIA SYNC
LINE INTERFACE CARD
DATE 01-26-72 MACH. 27RNB
LOG 600 FRAME 01
P.N. 1785446
IBM CORP. SDD BLK. GL
VA140
000

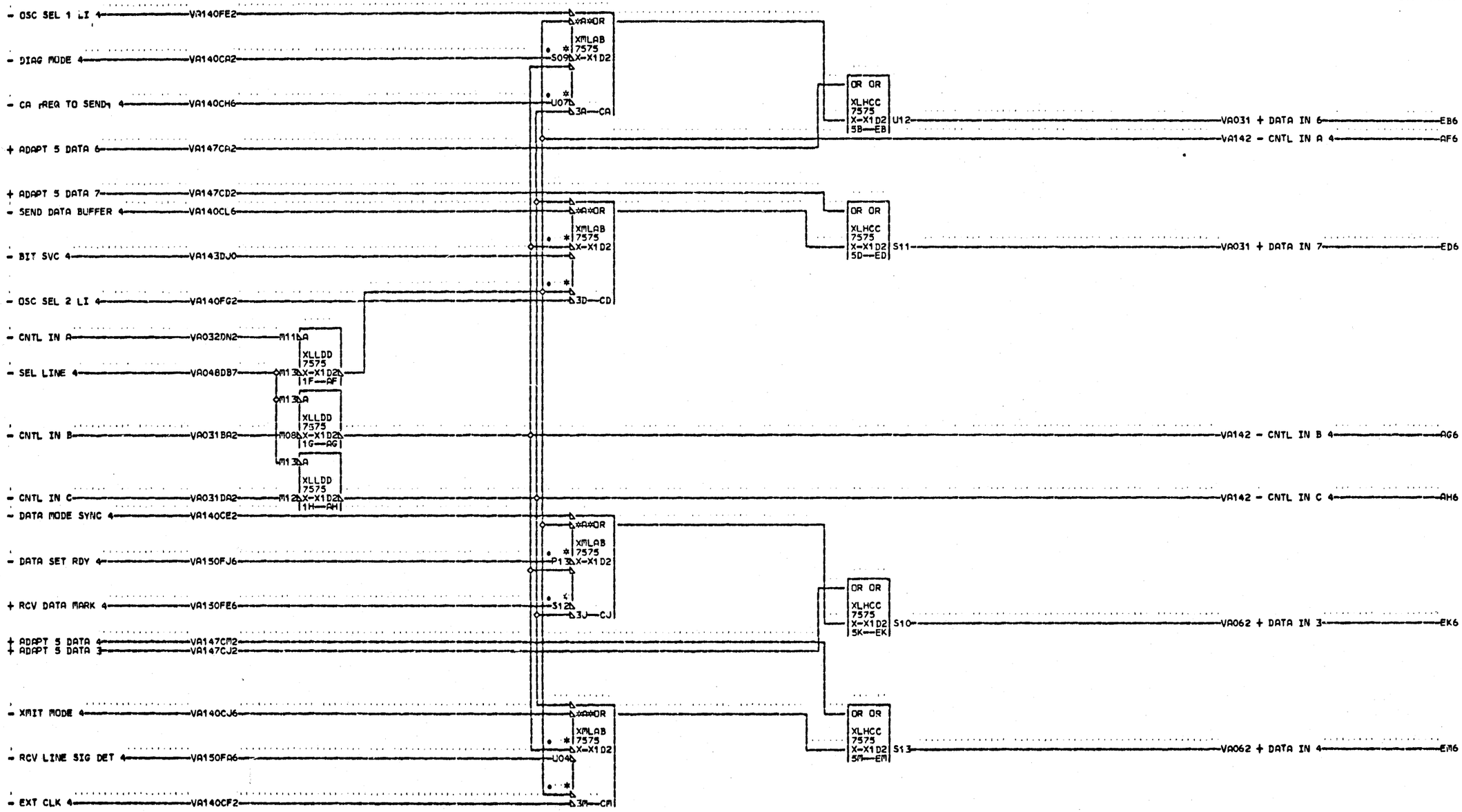

* NOTE
* FULL FEATURE WIRING SHOWN
* WITH EIA SYNC LINE SET
* SEE VA000 FOR OTHER LINE SET

000

01-26-72 309520C

EIA SYNC
LINE INTERFACE CARD
DATE 01-26-72 MACH. 27RNB
LOG 600 FRAME 01
P.N. 1785447
IBM CORP. SDD BLK. EN

VA 141 000

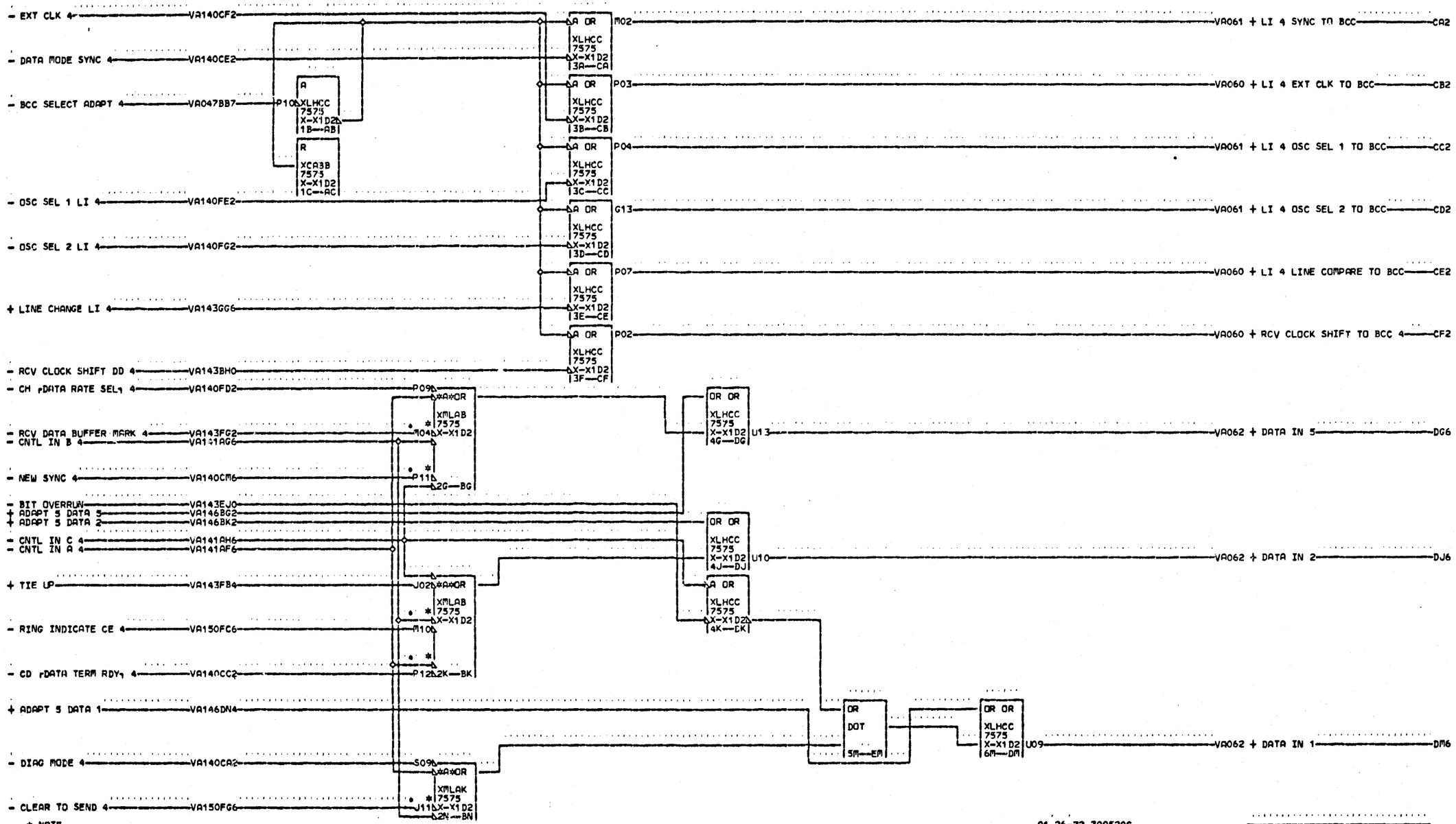

* NOTE
* FULL FEATURE WIRING SHOWN
V * WITH EIA SYNC LINE SET
A * SEE VA000 FOR OTHER LINE SET
1
4
2
000

01-26-72 309520C

EIA SYNC
LINE INTERFACE CARD
DATE 01-26-72 MACH. 27RNB
LOG 600 FRAME 01
P.N. 1785448
IBM CORP. SDD BLK. EN

V A 1 4 2 000

000 VA143

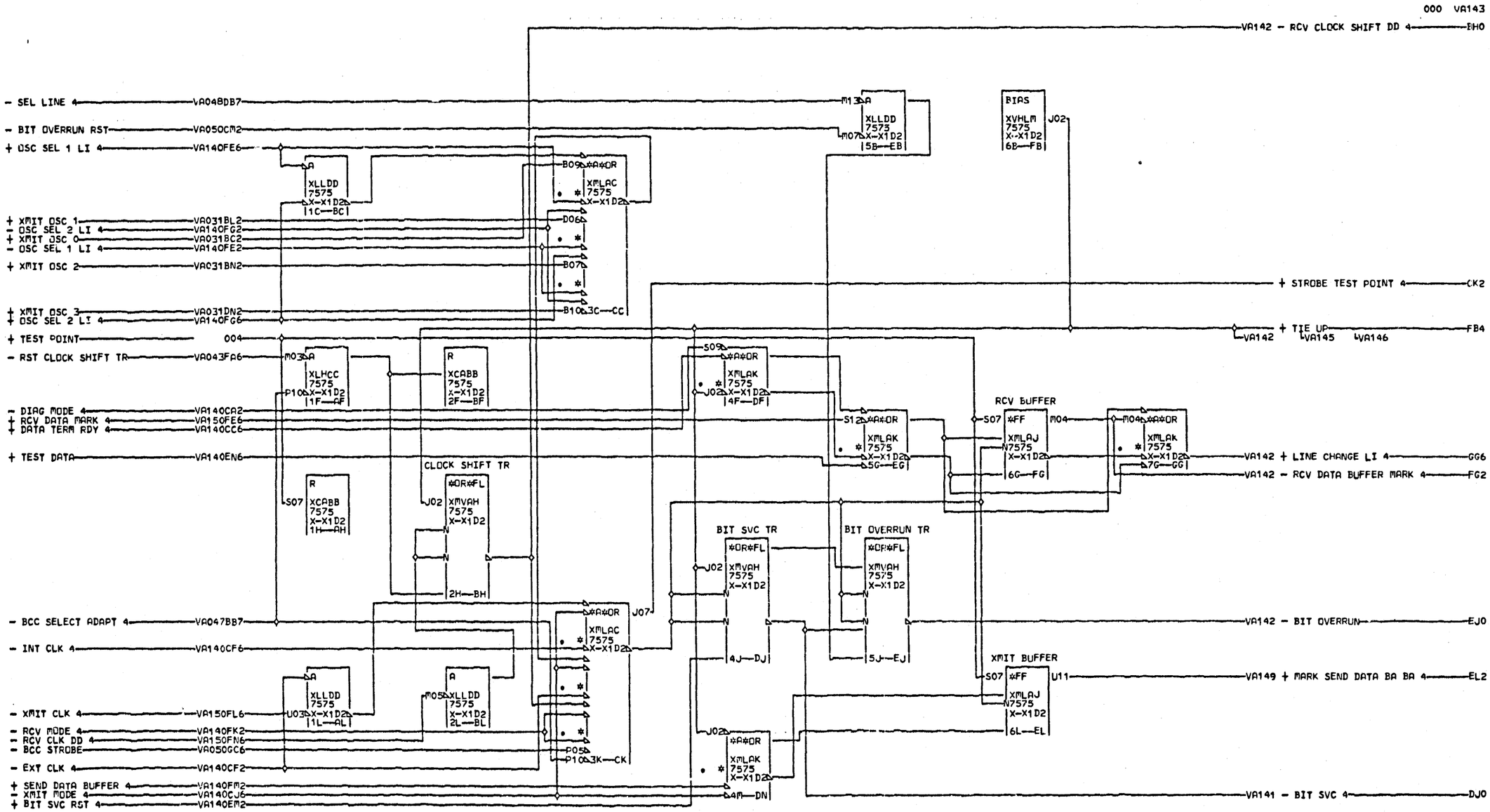

* NOTE
* FULL FEATURE WIRING SHOWN
V * WITH EIA SYNC LINE SET
A * AND LINE INTERFACE CARD
1 * PN 8211452 INSTALLED
4 * SEE VA000 FOR OTHER
3 * LINE SETS

000

01-26-72 309520C
11-11-74 311286

EIA SYNC LINE INTERFACE CARD			V A 1 4 3 000
DATE 11-22-74 MACH. 27RNB			
LOC 400	FRAME	01	
	P.N.	1785449	
IBM CORP. SDD BLK.		GH	

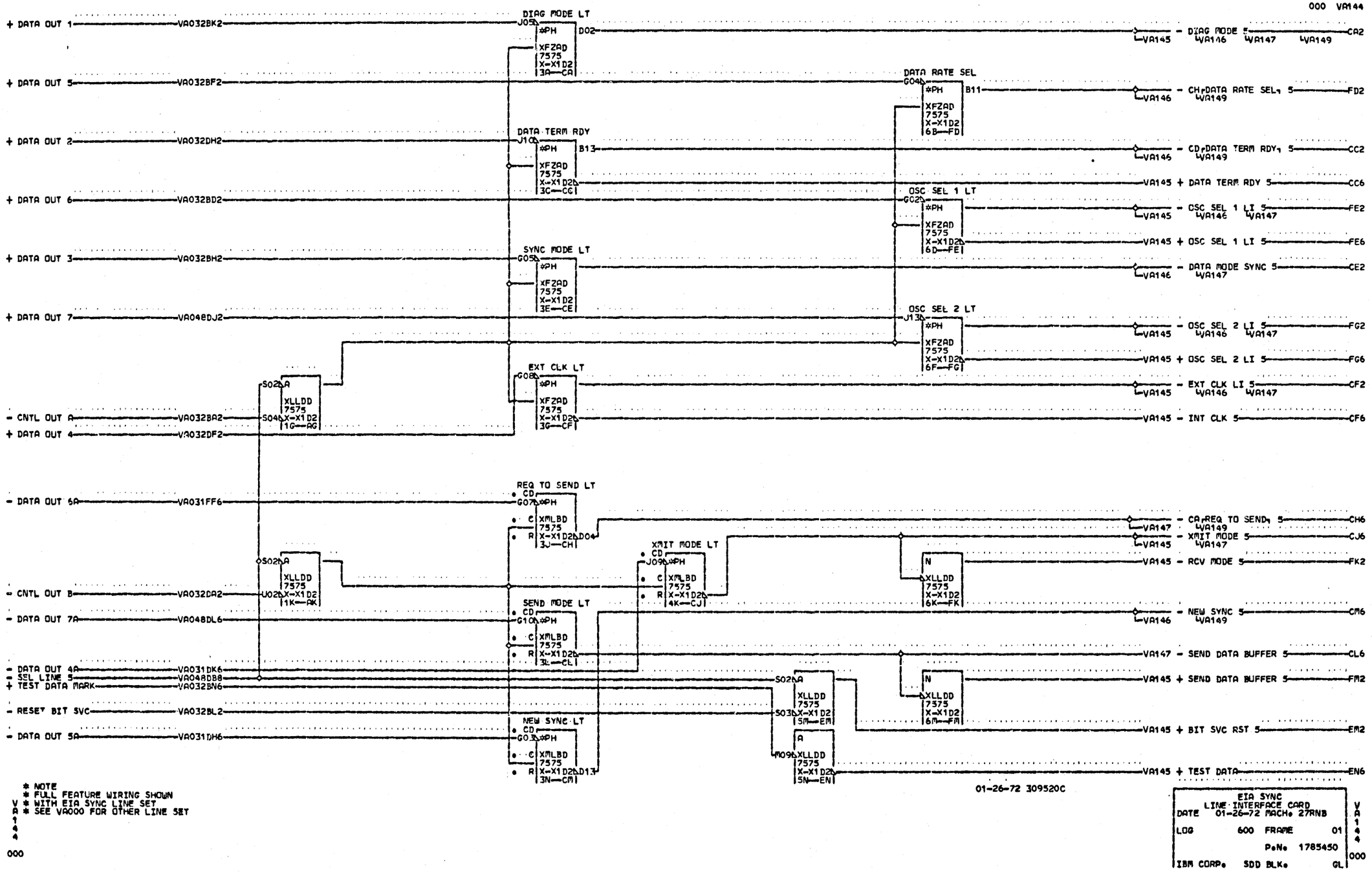
000 VA144
+ DATA OUT 1
VA032BK2
DIAG MODE LT
J05
*PH
XFZAD
7575
X-X1D2
3A—CA
D02
VA145
- DIAG MODE 5
VA146
VA147
VA149
CA2
+ DATA OUT 5
VA032BF2
DATA RATE SEL
G04
B11
- CH,DATA RATE SEL, 5
FD2
+ DATA OUT 2
VA032DH2
DATA TERM RDY
J10
B13
- CD,DATA TERM RDY, 5
CC2
VA145 + DATA TERM RDY 5
CC6
+ DATA OUT 6
VA032BD2
OSC SEL 1 LT
G02
- OSC SEL 1 LI 5
FE2
VA145 + OSC SEL 1 LI 5
FE6
+ DATA OUT 3
VA032BH2
SYNC MODE LT
G05
- DATA MODE SYNC 5
CE2
+ DATA OUT 7
VA048DJ2
OSC SEL 2 LT
J13
- OSC SEL 2 LI 5
FG2
VA145 + OSC SEL 2 LI 5
FG6
EXT CLK LT
G08
- EXT CLK LI 5
CF2
- CNTL OUT A
VA032BA2
S02
S04
XLLDD
7575
X-X1D2
1G—AG
+ DATA OUT 4
VA032DF2
VA145 - INT CLK 5
CF6
- DATA OUT 6A
VA031FF6
REQ TO SEND LT
G07
XMLBD
3J—CH
D04
- CA,REQ TO SEND, 5
CH6
VA147
- XMIT MODE 5
CJ6
VA145 - RCV MODE 5
FK2
XMIT MODE LT
J09
4K—CJ
- CNTL OUT B
VA032DA2
U02
1K—AK
- DATA OUT 7A
VA048DL6
SEND MODE LT
G10
- NEW SYNC 5
CM6
VA147 - SEND DATA BUFFER 5
CL6
- DATA OUT 4A
VA031DK6
- SEL LINE 5
VA048DB8
+ TEST DATA MARK
VA032BN6
VA145 + SEND DATA BUFFER 5
FM2
- RESET BIT SVC
VA032BL2
S03
5M—EM
VA145 + BIT SVC RST 5
EM2
- DATA OUT 5A
VA031DH6
NEW SYNC LT
G03
3N—CM
D13
M09
5N—EN
VA145 + TEST DATA
EN6
01-26-72 309520C
* NOTE
* FULL FEATURE WIRING SHOWN
* WITH EIA SYNC LINE SET
* SEE VA000 FOR OTHER LINE SET
VA144
000
EIA SYNC
LINE INTERFACE CARD
DATE 01-26-72 MACH. 27RNB
LOG 600 FRAME 01
P.N. 1785450
IBM CORP. SDD BLK. GL

000 VA145

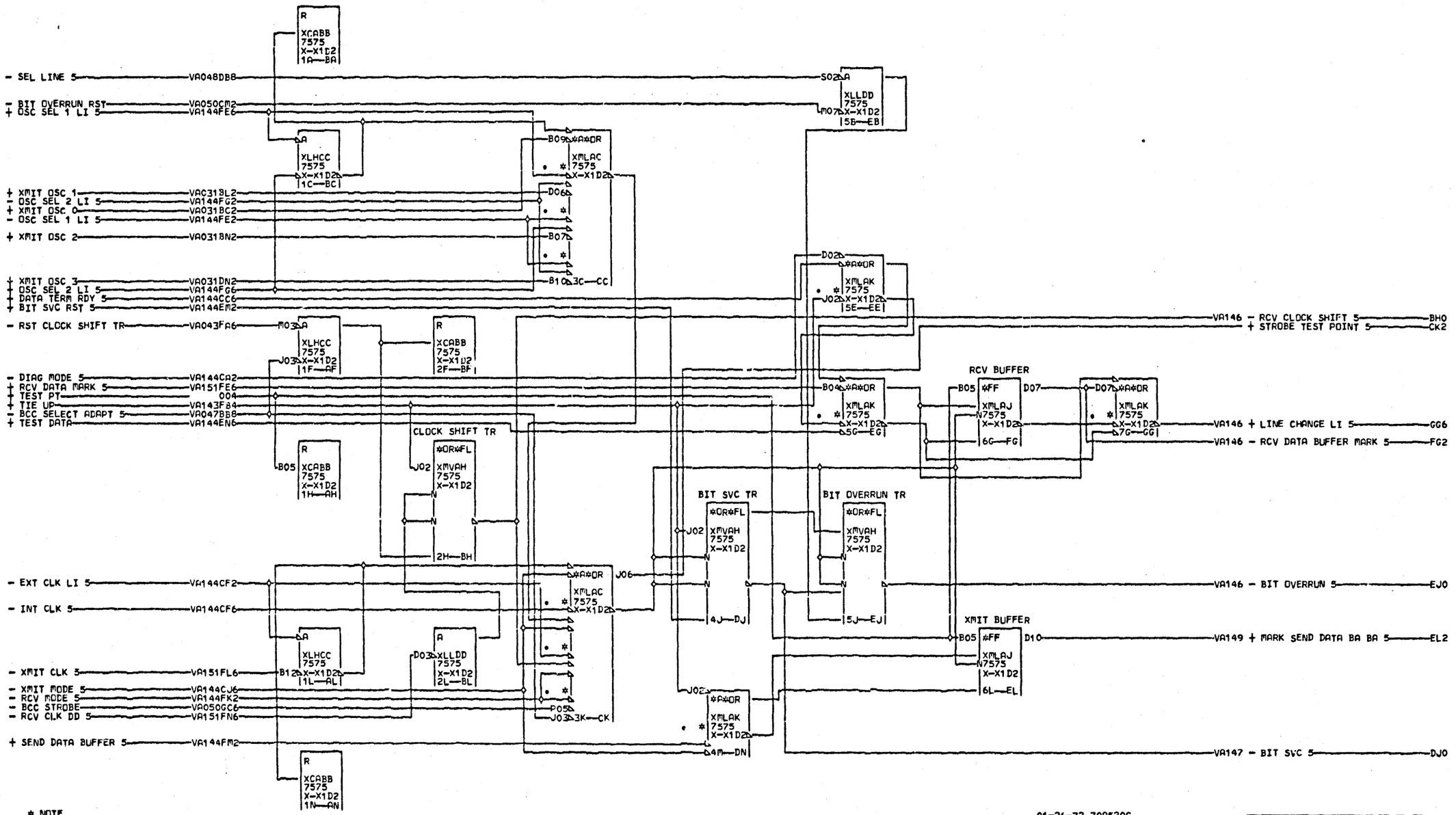

* NOTE
* FULL FEATURE WIRING SHOWN
V * WITH EIA SYNC LINE SET
A * AND LINE INTERFACE CARD
1 * PN 8211452 INSTALLED
4 * SEE VA000 FOR OTHER
5 * LINE SETS

000

01-26-72 309520C
11-11-74 311286

EIA SYNC
LINE INTERFACE CARD
DATE 11-22-74 MACH. 27RNB
LOC 400 FRAME 01
P.N. 1785451
IBM CORP. SDD BLK. GH

VA145 000

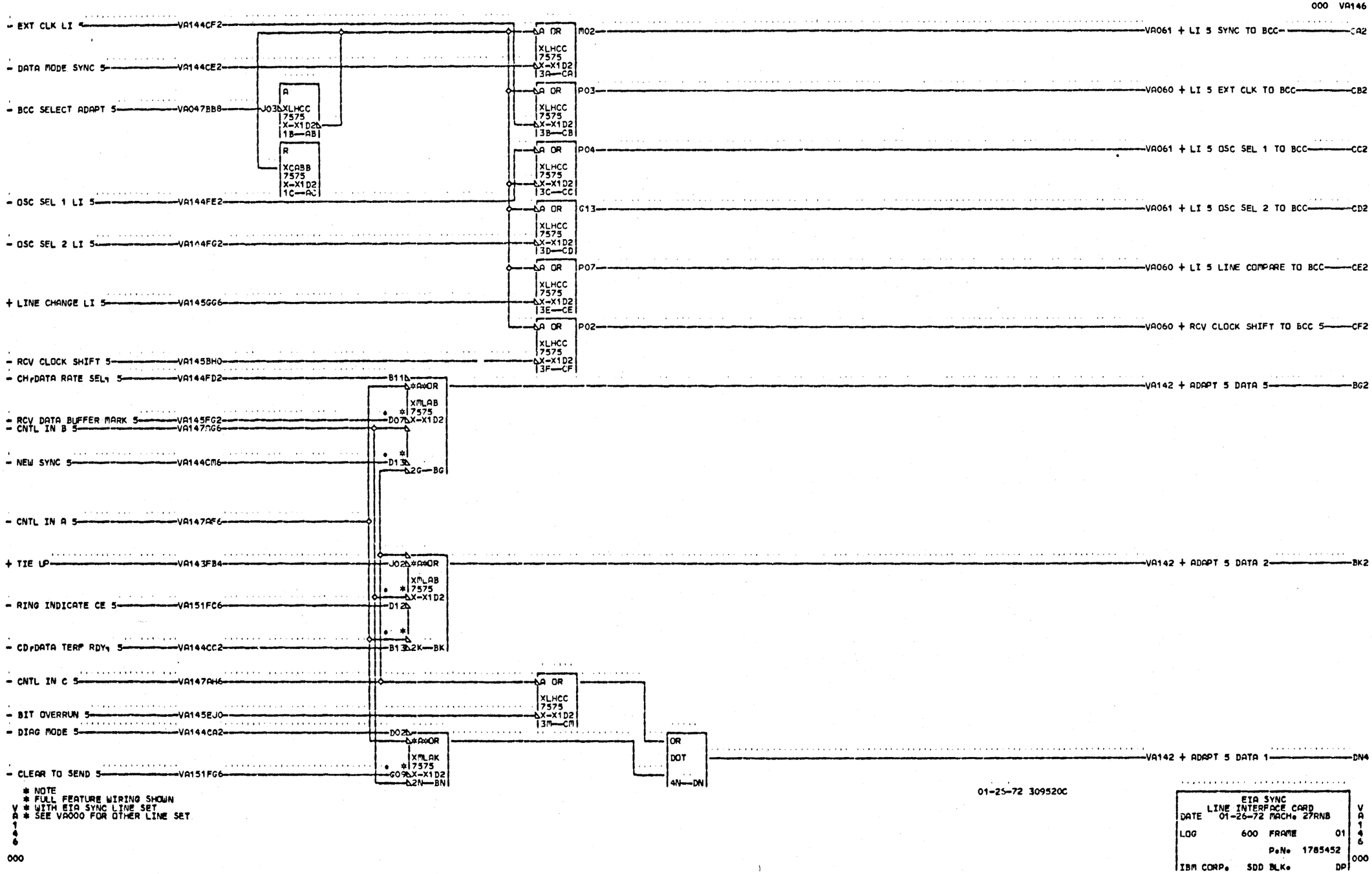

* NOTE
* FULL FEATURE WIRING SHOWN
* WITH EIA SYNC LINE SET
* SEE VA000 FOR OTHER LINE SET

VA 146
000

01-25-72 309520C

EIA SYNC
LINE INTERFACE CARD
DATE 01-26-72 MACH. 27RNB
LOG 600 FRAME 01
P.N. 1785452
IBM CORP. SDD BLK. DP

VA 146
000

000 VA147

- OSC SEL 1 LI 5 — VA144FE2 — *A*OR — VA141 + ADAPT 5 DATA 6 — CA2
- DIAG MODE 5 — VA144CA2 — XMLAB 7575 DO2 X-X1D2
- CA REQ TO SEND 5 — VA144CH6 — DO4 3A — CA
- VA146 - CNTL IN A 5 — AF6
- SEND DATA BUFFER 5 — VA144CL6 — *A*OR — VA141 + ADAPT 5 DATA 7 — CD2
- BIT SVC 5 — VA145DJ0 — XMLAB 7575 X-X1D2
- OSC SEL 2 LI 5 — VA144FG2 — 3D — CD
- CNTL IN A — VA032DN2 — M11 A
- SEL LINE 5 — VA048DB8 — XLLDD 7575 SO2 X-X1D2 1F — AF
- SO2 A
- CNTL IN B — VA031BA2 — XLLDD 7575 M08 X-X1D2 1G — AG
- SO2 A
- CNTL IN C — VA031DA2 — XLLDD 7575 M12 X-X1D2 1H — AH
- VA146 - CNTL IN C 5 — AH6
- VA146 - CNTL IN B 5 — AG6
- SERV* MIL 188 DO5 X-X1D2 5H — EH — VA151 MIL 188 — EH4
- DATA MODE SYNC 5 — VA144CE2 — *A*OR — VA141 + ADAPT 5 DATA 3 — CJ2
- DATA SET RDY 5 — VA151FJ6 — XMLAB 7575 B02 X-X1D2
- SERV* AUTO CALLPR P06 X-X1D2 5K — EK — VA050 + AUTO CALL PRESENT — EK4
- RCV DATA MARK 5 — VA151FE6 — B04 3J — CJ
- XMIT MODE 5 — VA144CJ6 — *A*OR — VA141 + ADAPT 5 DATA 4 — CM2
- RCV LINE SIG DET 5 — VA151FA6 — XMLAB 7575 B03 X-X1D2
- EXT CLK LI 5 — VA144CF2 — 3M — CM

* NOTE
* FULL FEATURE WIRING SHOWN
* WITH EIA SYNC LINE SET
* SEE VA000 FOR OTHER LINE SET

VA 147
000

01-26-72 309520C

EIA SYNC
LINE INTERFACE CARD
DATE 01-26-72 MACH. 27RNB
LOG 600 FRAME 01
P.N. 1785453
IBM CORP. SDD BLK. EL

VA 147 000

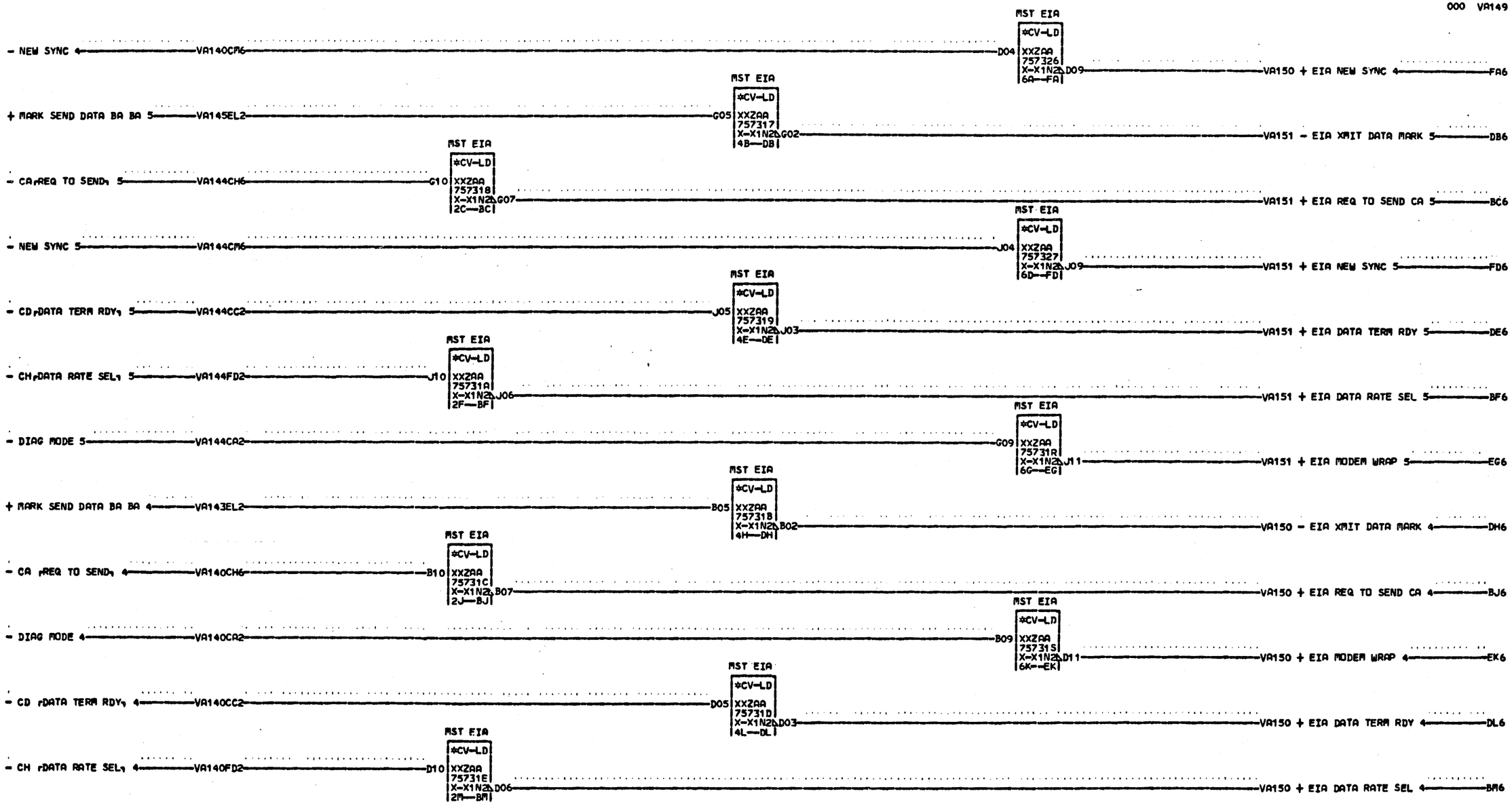

* NOTE
* FULL FEATURE WIRING SHOWN
* WITH EIA SYNC LINE SET
* SEE VA000 FOR OTHER LINE SET

V A 1 4 9 000

01-26-72 309520C

EIA SYNC DRIVER CARD
DATE 01-26-72 MACH. 27RNB
LOG 600 FRAME 01
P.N. 1785454
IBM CORP. SDD BLK. FF

V A 1 4 9 000

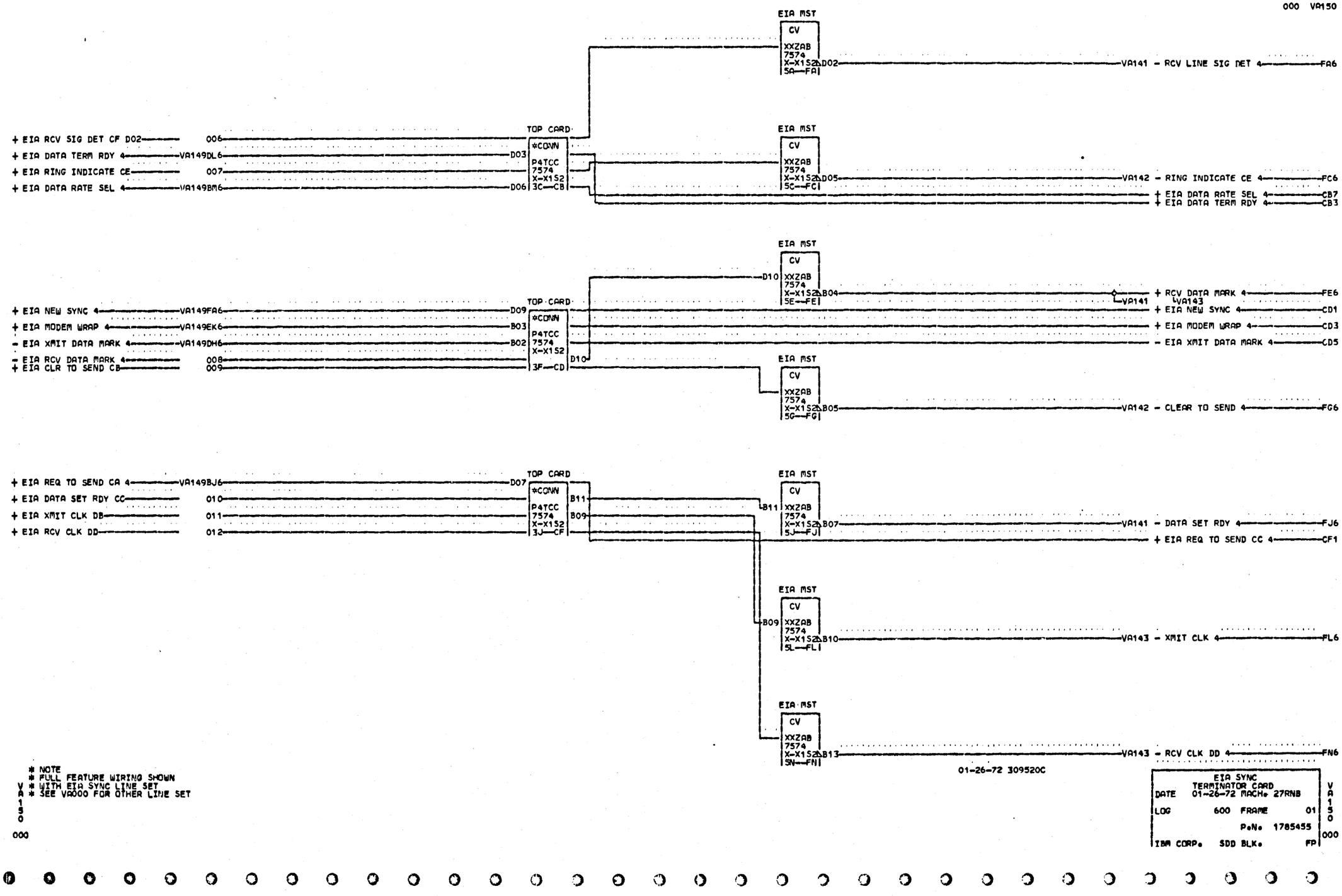

* NOTE
* FULL FEATURE WIRING SHOWN
* WITH EIA SYNC LINE SET
* SEE VA000 FOR OTHER LINE SET

VA150
000

01-26-72 309520C

EIA SYNC
TERMINATOR CARD
DATE 01-26-72 MACH. 27RNB
LOG 600 FRAME 01
P.N. 1785455
IBM CORP. SDD BLK. FP

VA150
000

000 VA151

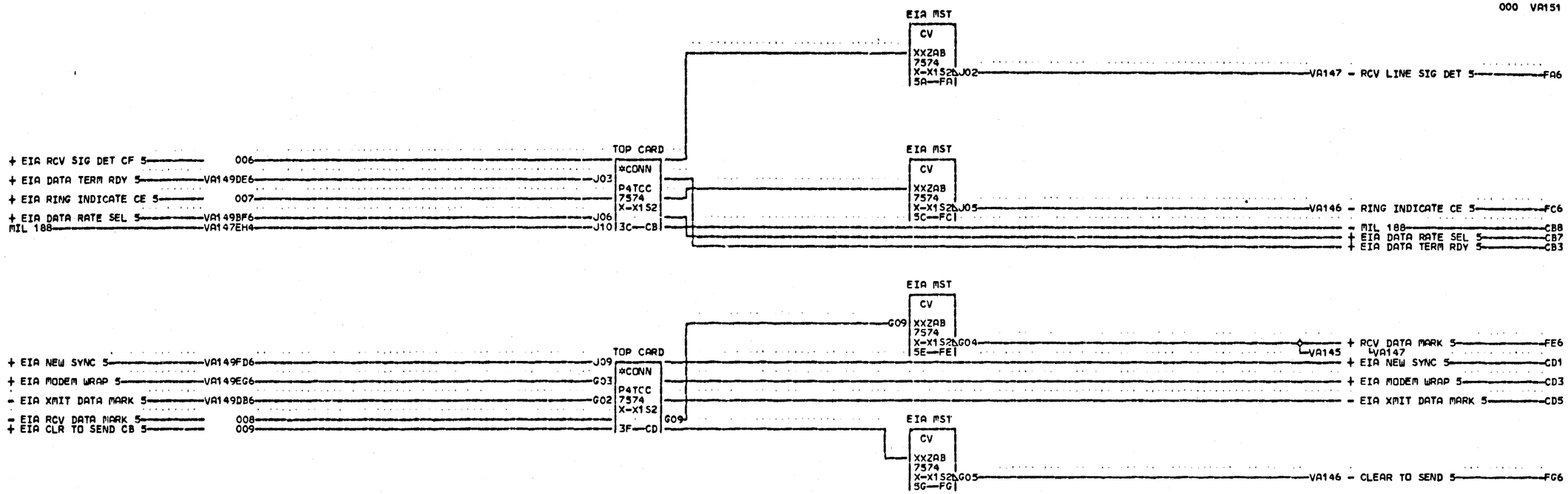

* NOTE
* FULL FEATURE WIRING SHOWN
* WITH EIA SYNC LINE SET
* SEE VA000 FOR OTHER LINE SET

VA151
000

01-26-72 309520C

EIA SYNC
TERMINATOR CARD
DATE 01-26-72 MACH. 27RNB
LOG 600 FRAME 01
P.N. 1785456
IBM CORP. SDD BLK. FP

VA151
000

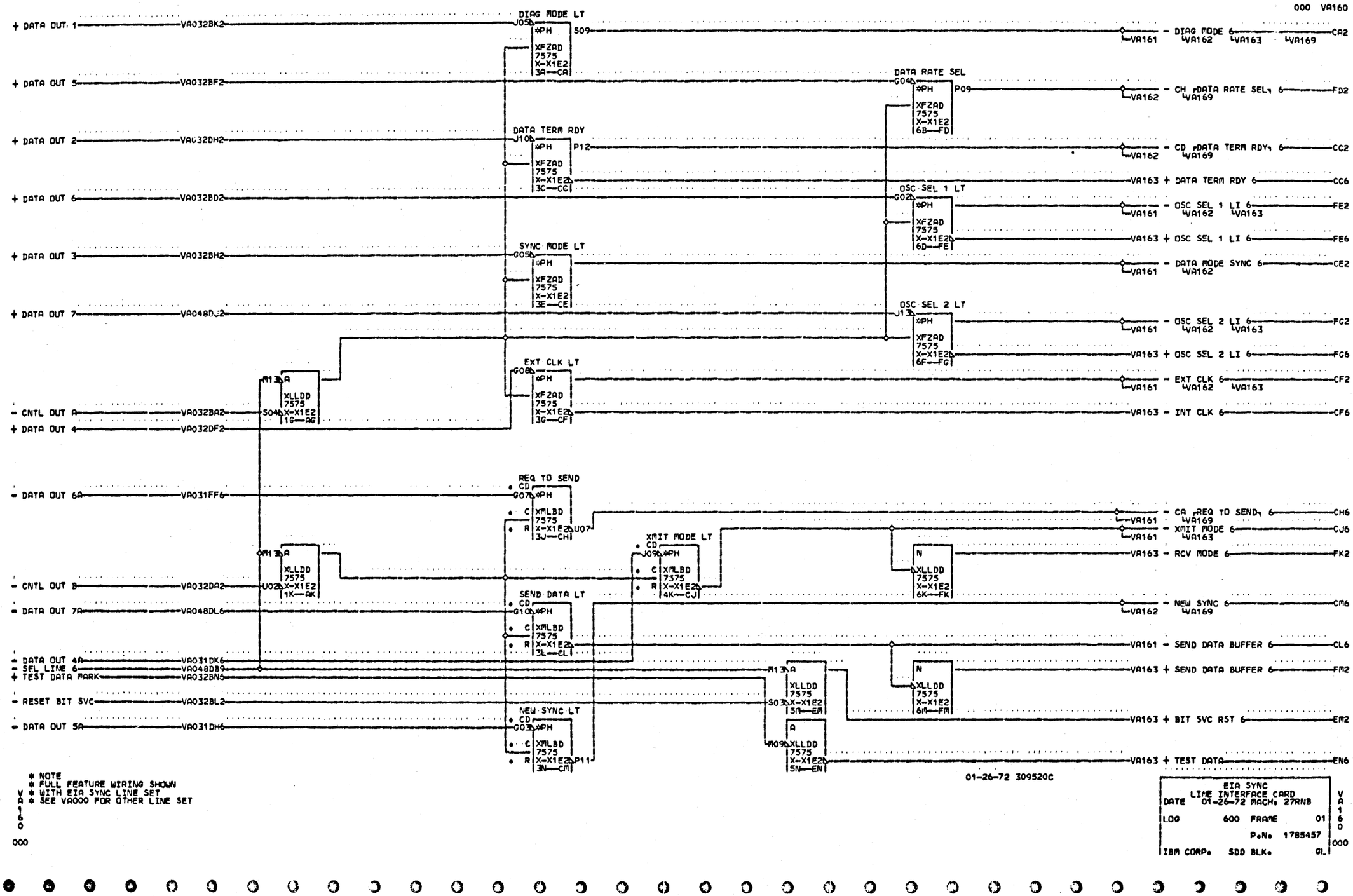
000 VA160
+ DATA OUT 1 — VA032BK2
DIAG MODE LT J05 *PH XFZAD 7575 X-X1E2 3A—CA — S09
- DIAG MODE 6 — CA2
VA161 VA162 VA163 VA169
+ DATA OUT 5 — VA032BF2
DATA RATE SEL G04 *PH XFZAD 7575 X-X1E2 6B—FD — P09
- CH DATA RATE SEL 6 — FD2
VA162 VA169
+ DATA OUT 2 — VA032DH2
DATA TERM RDY J10 *PH XFZAD 7575 X-X1E2 3C—CC — P12
- CD DATA TERM RDY 6 — CC2
VA162 VA169
VA163 + DATA TERM RDY 6 — CC6
+ DATA OUT 6 — VA032BD2
OSC SEL 1 LT G02 *PH XFZAD 7575 X-X1E2 6D—FE
- OSC SEL 1 LI 6 — FE2
VA161 VA162 VA163
VA163 + OSC SEL 1 LI 6 — FE6
+ DATA OUT 3 — VA032BH2
SYNC MODE LT G05 *PH XFZAD 7575 X-X1E2 3E—CE
- DATA MODE SYNC 6 — CE2
VA161 VA162
+ DATA OUT 7 — VA048DJ2
OSC SEL 2 LT J13 *PH XFZAD 7575 X-X1E2 6F—FG
- OSC SEL 2 LI 6 — FG2
VA161 VA162 VA163
VA163 + OSC SEL 2 LI 6 — FG6
EXT CLK LT G08 *PH XFZAD 7575 X-X1E2 3G—CF
- EXT CLK 6 — CF2
VA161 VA162 VA163
VA163 - INT CLK 6 — CF6
M13 A XLLDD 7575 X-X1E2 1G—AG — S04
- CNTL OUT A — VA032BA2
+ DATA OUT 4 — VA032DF2
REQ TO SEND G07 *PH C XMLBD 7575 R X-X1E2 3J—CH — U07
- CA REQ TO SEND 6 — CH6
VA161 VA169
XMIT MODE LT J09 *PH C XMLBD 7575 R X-X1E2 4K—CJ
- XMIT MODE 6 — CJ6
VA161 VA163
M13 A XLLDD 7575 X-X1E2 1K—AK — U02
- CNTL OUT B — VA032DA2
N XLLDD 7575 X-X1E2 6K—FK
VA163 - RCV MODE 6 — FK2
SEND DATA LT G10 *PH C XMLBD 7575 R X-X1E2 3L—CL
- NEW SYNC 6 — CM6
VA162 VA169
- DATA OUT 7A — VA048DL6
VA161 - SEND DATA BUFFER 6 — CL6
- DATA OUT 4A — VA031DK6
- SEL LINE 6 — VA048DB9
+ TEST DATA MARK — VA032BN5
M13 A XLLDD 7575 X-X1E2 5M—EM — S03
N XLLDD 7575 X-X1E2 6M—FM
VA163 + SEND DATA BUFFER 6 — FM2
- RESET BIT SVC — VA032BL2
NEW SYNC LT G03 *PH C XMLBD 7575 R X-X1E2 3N—CM — P11
A XLLDD 7575 X-X1E2 5N—EN — M09
VA163 + BIT SVC RST 6 — EM2
- DATA OUT 5A — VA031DH6
VA163 + TEST DATA — EN6
* NOTE
* FULL FEATURE WIRING SHOWN
* WITH EIA SYNC LINE SET
* SEE VA000 FOR OTHER LINE SET
VA160
000
01-26-72 309520C
EIA SYNC
LINE INTERFACE CARD
DATE 01-26-72 MACH. 27RNB
LOG 600 FRAME 01
P.No. 1785457
IBM CORP. SDD BLK. GL
VA160
000

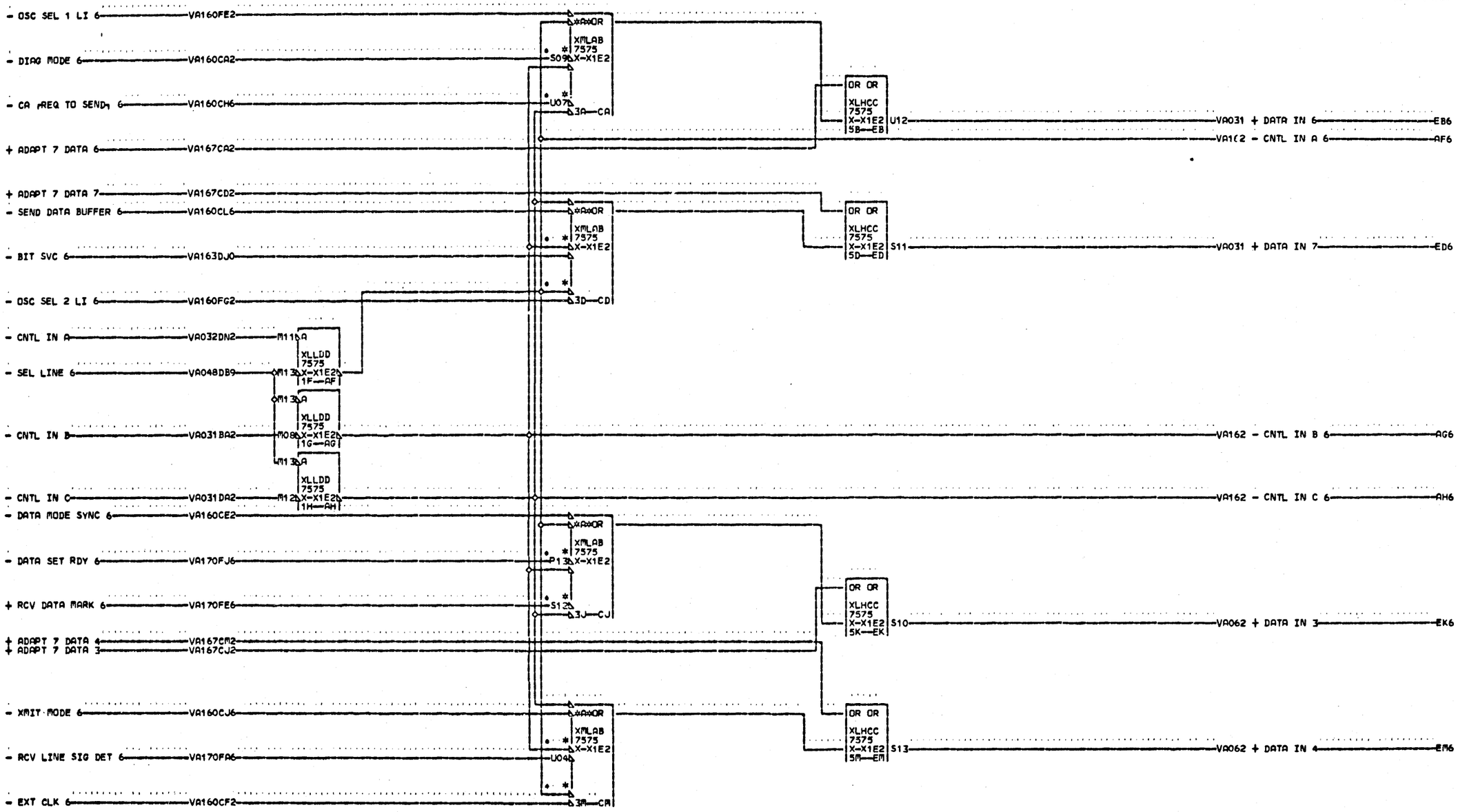

* NOTE
* FULL FEATURE WIRING SHOWN
* WITH EIA SYNC LINE SET
* SEE VA000 FOR OTHER LINE SET

V A 1 6 1
000

01-26-72 309520C

EIA SYNC
LINE INTERFACE CARD
DATE 01-26-72 MACH. 27RNB

LOG 600 FRAME 01

P.N. 1785458

IBM CORP. SDD BLK. EN

V A 1 6 1 000

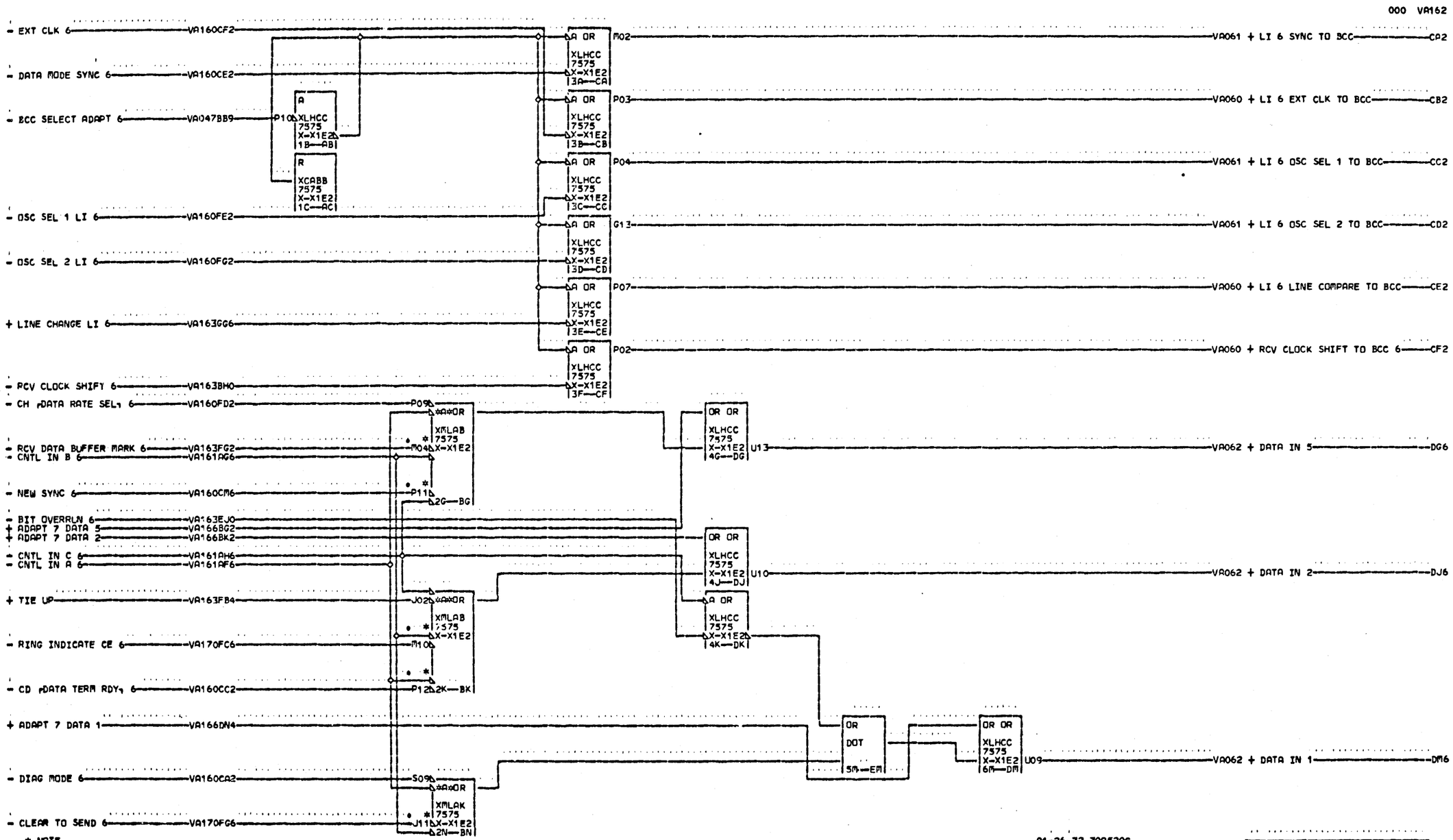
000 VA162
- EXT CLK 6 VA160CF2
- DATA MODE SYNC 6 VA160CE2
- BCC SELECT ADAPT 6 VA047BB9
- OSC SEL 1 LI 6 VA160FE2
- OSC SEL 2 LI 6 VA160FG2
+ LINE CHANGE LI 6 VA163GG6
- RCV CLOCK SHIFT 6 VA163BH0
- CH (DATA RATE SEL) 6 VA160FD2
- RCV DATA BUFFER MARK 6 VA163FG2
- CNTL IN B 6 VA161AG6
- NEW SYNC 6 VA160CM6
- BIT OVERRUN 6 VA163EJ0
+ ADAPT 7 DATA 5 VA166BG2
+ ADAPT 7 DATA 2 VA166BK2
- CNTL IN C 6 VA161AH6
- CNTL IN A 6 VA161AF6
+ TIE UP VA163FB4
- RING INDICATE CE 6 VA170FC6
- CD (DATA TERM RDY) 6 VA160CC2
+ ADAPT 7 DATA 1 VA166DN4
- DIAG MODE 6 VA160CA2
- CLEAR TO SEND 6 VA170FG6
A OR XLHCC 7575 X-X1E2 3A—CA
A OR XLHCC 7575 X-X1E2 3B—CB
A OR XLHCC 7575 X-X1E2 3C—CC
A OR XLHCC 7575 X-X1E2 3D—CD
A OR XLHCC 7575 X-X1E2 3E—CE
A OR XLHCC 7575 X-X1E2 3F—CF
A XLHCC 7575 X-X1E2 1B—AB
R XCABB 7575 X-X1E2 1C—AC
M02 VA061 + LI 6 SYNC TO BCC CA2
P03 VA060 + LI 6 EXT CLK TO BCC CB2
P04 VA061 + LI 6 OSC SEL 1 TO BCC CC2
G13 VA061 + LI 6 OSC SEL 2 TO BCC CD2
P07 VA060 + LI 6 LINE COMPARE TO BCC CE2
P02 VA060 + RCV CLOCK SHIFT TO BCC 6 CF2
P09 *A*OR XMLAB 7575 X-X1E2
M04
P11 2G—BG
J02 *A*OR XMLAB 7575 X-X1E2
M10
P12 2K—BK
S09 *A*OR XMLAK 7575 X-X1E2
J11 2N—BN
OR OR XLHCC 7575 X-X1E2 4G—DG U13 VA062 + DATA IN 5 DG6
OR OR XLHCC 7575 X-X1E2 4J—DJ U10 VA062 + DATA IN 2 DJ6
A OR XLHCC 7575 X-X1E2 4K—DK
OR DOT 5M—EM
OR OR XLHCC 7575 X-X1E2 6M—DM U09 VA062 + DATA IN 1 DM6
* NOTE
* FULL FEATURE WIRING SHOWN
* WITH EIA SYNC LINE SET
* SEE VA000 FOR OTHER LINE SET
VA162
000
01-26-72 309520C
EIA SYNC
LINE INTERFACE CARD
DATE 01-26-72 MACH. 27RNB
LOG 600 FRAME 01
P.No. 1785459
IBM CORP. SDD BLK. EN
VA162
000

000 VA163

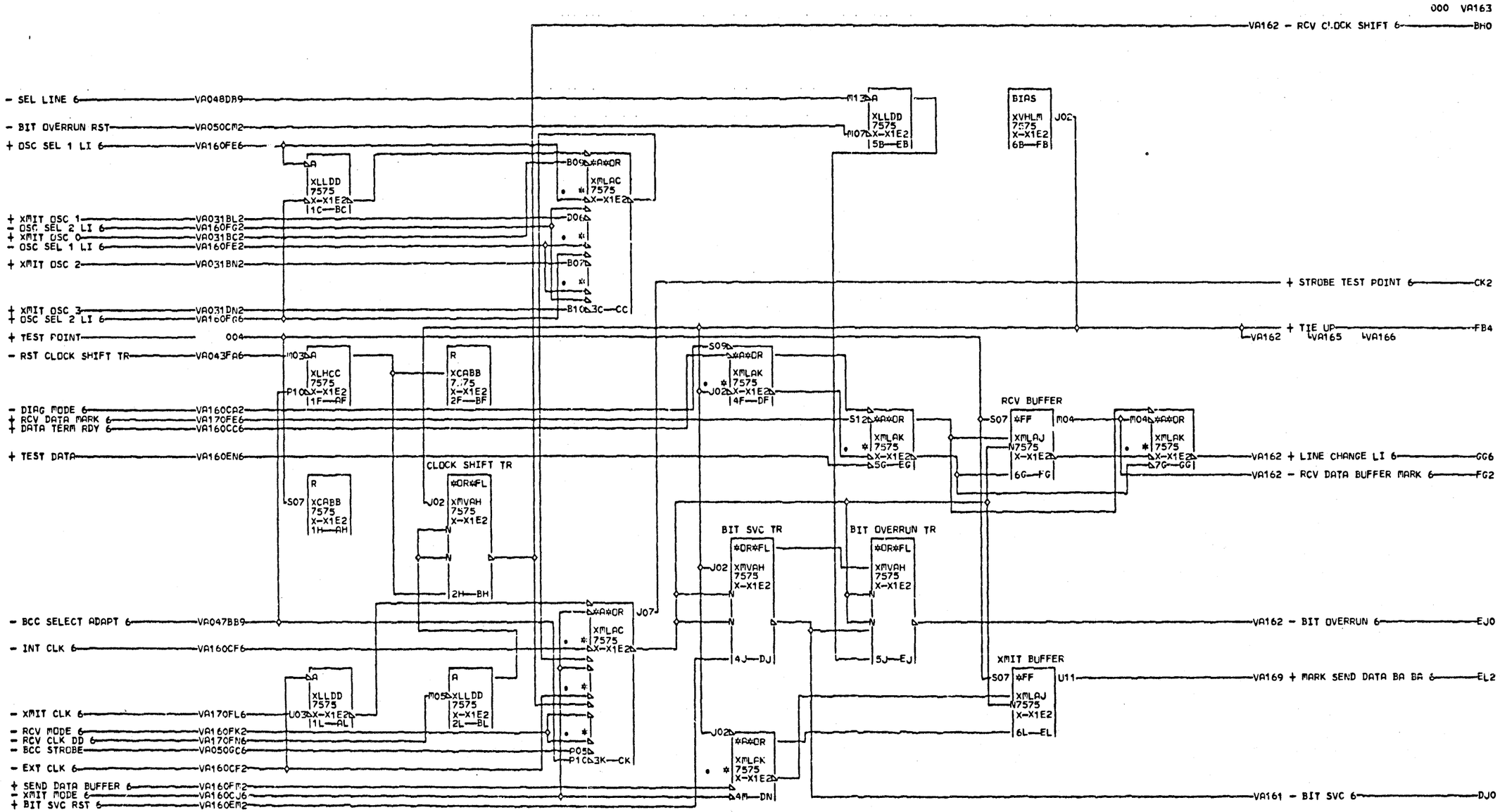

* NOTE
* FULL FEATURE WIRING SHOWN
V * WITH EIA SYNC LINE SET
A * AND LINE INTERFACE CARD
1 * PN 8211452 INSTALLED
6 * SEE VA000 FOR OTHER
3 * LINE SETS

000

01-26-72 309520C
11-11-74 311286

EIA SYNC LINE INTERFACE CARD				V A 1 6 3 000
DATE 11-22-74 MACH. 27RNB				
LOG	400	FRAME	01	
		P.N.	1785460	
IBM CORP.	SDD BLK.		GH	

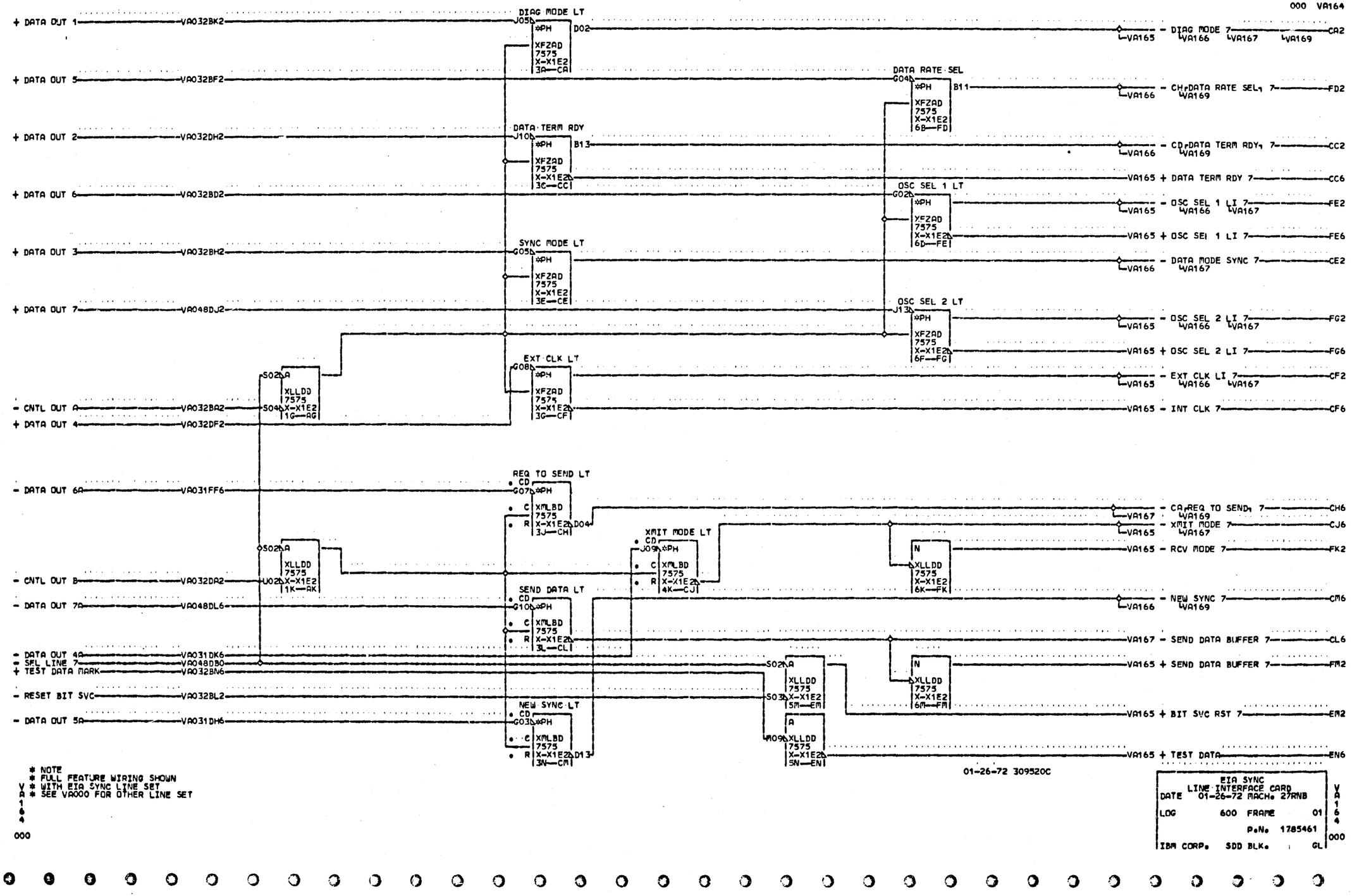
+ DATA OUT 1
VA032BK2
DIAG MODE LT
J05
*PH
XFZAD 7575 X-X1E2 3A—CA
D02
- DIAG MODE 7
CA2
+ DATA OUT 5
VA032BF2
DATA RATE SEL
G04
*PH
XFZAD 7575 X-X1E2 6B—FD
B11
- CH DATA RATE SEL 7
FD2
+ DATA OUT 2
VA032DH2
DATA TERM RDY
J10
*PH
XFZAD 7575 X-X1E2 3C—CC
B13
- CD DATA TERM RDY 7
CC2
VA165 + DATA TERM RDY 7
CC6
+ DATA OUT 6
VA032BD2
OSC SEL 1 LT
G02
*PH
XFZAD 7575 X-X1E2 6D—FE
- OSC SEL 1 LI 7
FE2
VA165 + OSC SEL 1 LI 7
FE6
+ DATA OUT 3
VA032BH2
SYNC MODE LT
G05
*PH
XFZAD 7575 X-X1E2 3E—CE
- DATA MODE SYNC 7
CE2
+ DATA OUT 7
VA048DJ2
OSC SEL 2 LT
J13
*PH
XFZAD 7575 X-X1E2 6F—FG
- OSC SEL 2 LI 7
FG2
VA165 + OSC SEL 2 LI 7
FG6
EXT CLK LT
G08
*PH
XFZAD 7575 X-X1E2 3G—CF
- EXT CLK LI 7
CF2
VA165 - INT CLK 7
CF6
S02 A
XLLDD 7575 X-X1E2 1G—AG
S04
- CNTL OUT A
VA032BA2
+ DATA OUT 4
VA032DF2
REQ TO SEND LT
G07
*PH
XMLBD 7575 X-X1E2 3J—CH
D04
- CA REQ TO SEND 7
CH6
VA167 - XMIT MODE 7
CJ6
XMIT MODE LT
J09
*PH
XMLBD 7575 X-X1E2 4K—CJ
S02 A
XLLDD 7575 X-X1E2 1K—AK
U02
- CNTL OUT B
VA032DA2
SEND DATA LT
G10
*PH
XMLBD 7575 X-X1E2 3L—CL
N
XLLDD 7575 X-X1E2 6K—FK
VA165 - RCV MODE 7
FK2
VA166 - NEW SYNC 7
CM6
- DATA OUT 7A
VA048DL6
VA167 - SEND DATA BUFFER 7
CL6
- DATA OUT 4A
VA031DK6
- SPL LINE 7
VA048DB0
+ TEST DATA MARK
VA032BM6
S02 A
XLLDD 7575 X-X1E2 5M—EM
N
XLLDD 7575 X-X1E2 6M—FM
VA165 + SEND DATA BUFFER 7
FM2
- RESET BIT SVC
VA032BL2
S03
VA165 + BIT SVC RST 7
EM2
NEW SYNC LT
G03
*PH
XMLBD 7575 X-X1E2 3N—CM
D13
- DATA OUT 5A
VA031DH6
A
XLLDD 7575 X-X1E2 5N—EN
VA09
VA165 + TEST DATA
EN6
* NOTE
* FULL FEATURE WIRING SHOWN
* WITH EIA SYNC LINE SET
* SEE VA000 FOR OTHER LINE SET
01-26-72 309520C
EIA SYNC
LINE INTERFACE CARD
DATE 01-26-72 MACH. 27RNB
LOG 600 FRAME 01
P.N. 1785461
IBM CORP. SDD BLK. GL
VA164 000

000 VA165

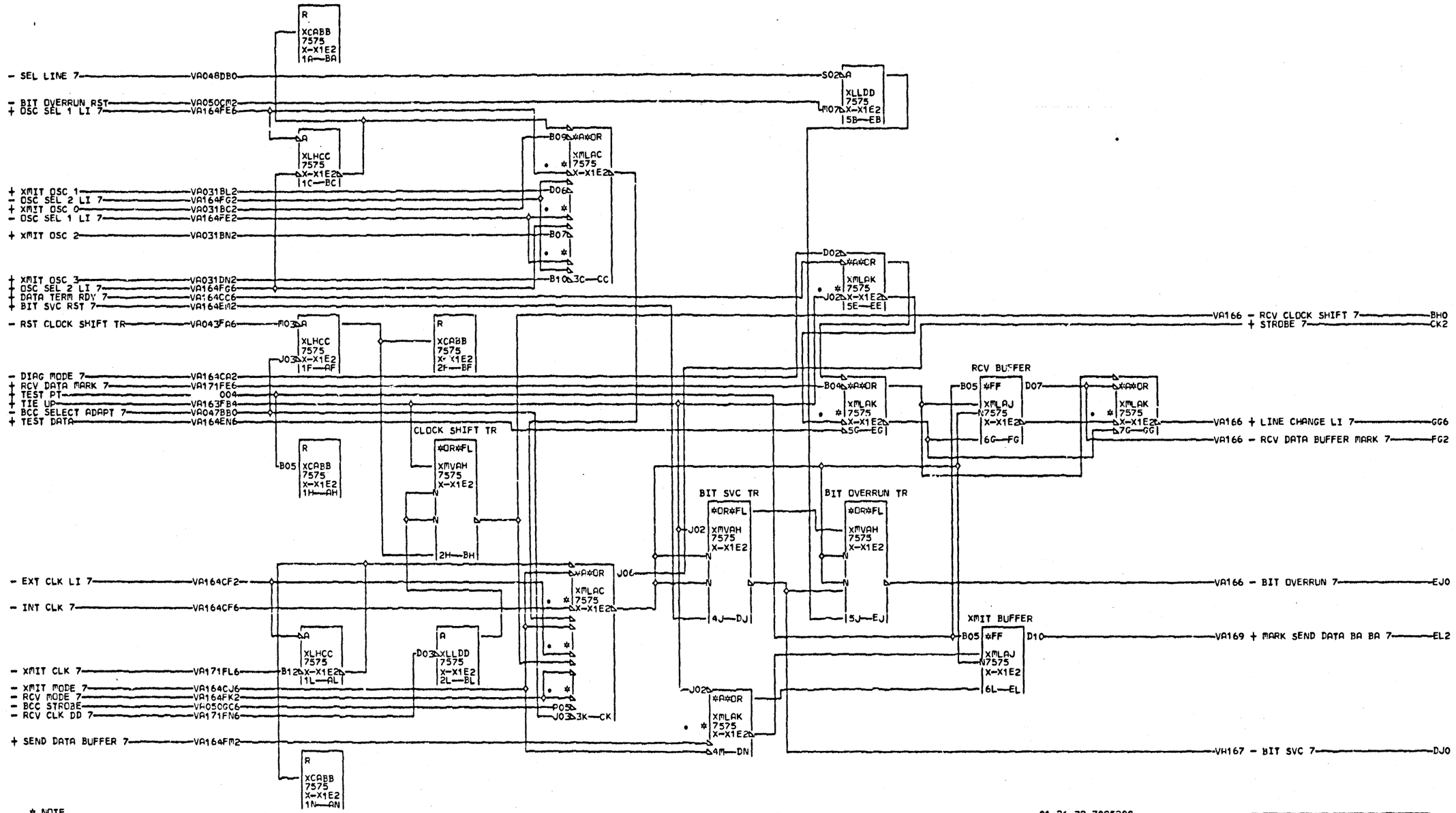

* NOTE
* FULL FEATURE WIRING SHOWN
V * WITH EIA SYNC LINE SET
A * AND LINE INTERFACE CARD
1 * PN 8211452 INSTALLED
6 * SEE VA000 FOR OTHER
5 * LINE SETS

000

01-26-72 309520C
11-11-74 311286

EIA SYNC
LINE INTERFACE CARD
DATE 11-22-74 MACH. 27RNB
LOG 400 FRAME 01
P.N. 1785462
IBM CORP. SDD BLK. GH

VA165 000

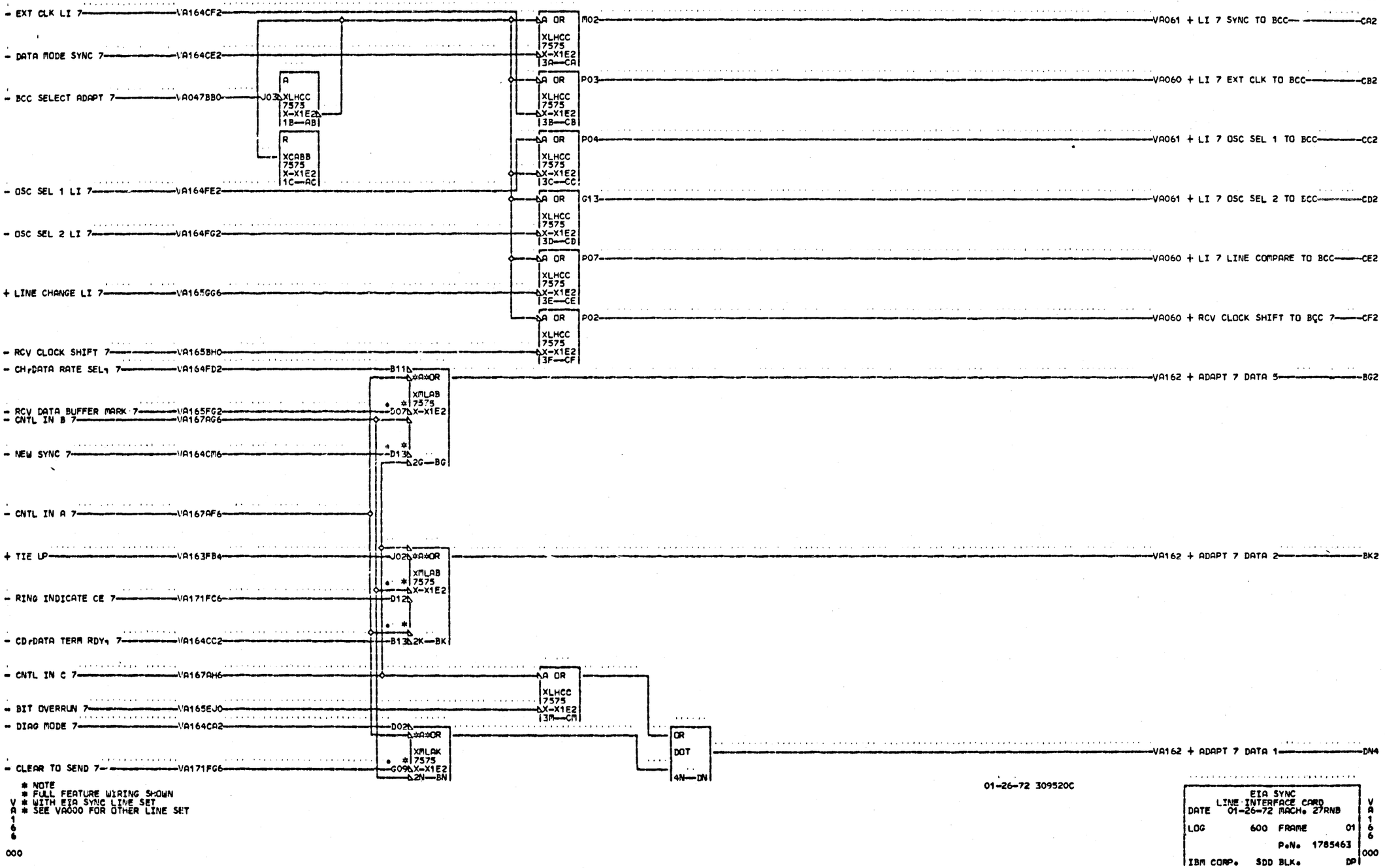
- EXT CLK LI 7
VA164CF2
- DATA MODE SYNC 7
VA164CE2
- BCC SELECT ADAPT 7
VA047BB0
J03
A
XLHCC 7575 X-X1E2 1B—AB
R
XCABB 7575 X-X1E2 1C—AC
- OSC SEL 1 LI 7
VA164FE2
- OSC SEL 2 LI 7
VA164FG2
+ LINE CHANGE LI 7
VA165GG6
- RCV CLOCK SHIFT 7
VA165BH0
- CH rDATA RATE SEL7
VA164FD2
- RCV DATA BUFFER MARK 7
VA165FG2
- CNTL IN B 7
VA167AG6
- NEW SYNC 7
VA164CM6
- CNTL IN A 7
VA167AF6
+ TIE LP
VA163FB4
- RING INDICATE CE 7
VA171FC6
- CD rDATA TERM RDY7
VA164CC2
- CNTL IN C 7
VA167AH6
- BIT OVERRUN 7
VA165EJ0
- DIAG MODE 7
VA164CA2
- CLEAR TO SEND 7
VA171FG6
A OR
XLHCC 7575 X-X1E2 3A—CA
XLHCC 7575 X-X1E2 3B—CB
XLHCC 7575 X-X1E2 3C—CC
XLHCC 7575 X-X1E2 3D—CD
XLHCC 7575 X-X1E2 3E—CE
XLHCC 7575 X-X1E2 3F—CF
XLHCC 7575 X-X1E2 3M—CM
*A*OR
XMLAB 7575 X-X1E2
XMLAK 7575 X-X1E2
B11
D07
D13
2G—BG
D12
B13 2K—BK
D02
G09 2N—BN
M02
VA061 + LI 7 SYNC TO BCC—CA2
P03
VA060 + LI 7 EXT CLK TO BCC—CB2
P04
VA061 + LI 7 OSC SEL 1 TO BCC—CC2
G13
VA061 + LI 7 OSC SEL 2 TO BCC—CD2
P07
VA060 + LI 7 LINE COMPARE TO BCC—CE2
P02
VA060 + RCV CLOCK SHIFT TO BCC 7—CF2
VA162 + ADAPT 7 DATA 5—BG2
VA162 + ADAPT 7 DATA 2—BK2
OR
DOT
4N—DN
VA162 + ADAPT 7 DATA 1—DN4
* NOTE
* FULL FEATURE WIRING SHOWN
* WITH EIA SYNC LINE SET
* SEE VA000 FOR OTHER LINE SET
VA16
000
01-26-72 309520C
EIA SYNC
LINE INTERFACE CARD
DATE 01-26-72 MACH. 27RNB
LOG 600 FRAME 01
P.N. 1785463
IBM CORP. SDD BLK. DP
VA16
000

000 VA167

- OSC SEL 1 LI 7 — VA164FE2 — *A*OR — VA161 + ADAPT 7 DATA 6 — CA2
- DIAG MODE 7 — VA164CA2 — D02 XMLAB 7575 X-X1E2
- CA REQ TO SEND 7 — VA164CH6 — D04 3A — CA
- VA165 - CNTL IN A 7 — AF6
- SEND DATA BUFFER 7 — VA164CL6 — *A*OR — VA161 + ADAPT 7 DATA 7 — CD2
- BIT SVC 7 — VA165DJ0 — XMLAB 7575 X-X1E2
- OSC SEL 2 LI 7 — VA164FG2 — 3D — CD
- CNTL IN A — VA032DN2 — M11 A
- SEL LINE 7 — VA048DB0 — S02 XLLDD 7575 X-X1E2 1F — AF
- S02 A
- VA166 - CNTL IN C 7 — AH6
- CNTL IN B — VA031BA2 — M08 XLLDD 7575 X-X1E2 1G — AG
- VA166 - CNTL IN B 7 — AG6
- S02 A
- CNTL IN C — VA031DA2 — M12 XLLDD 7575 X-X1E2 1H — AH
- SERV* MIL 188 D05 X-X1E2 5H — EH — VA171 MIL 188 — EH4
- DATA MODE SYNC 7 — VA164CE2 — *A*OR — VA161 + ADAPT 7 DATA 3 — CJ2
- DATA SET RDY 7 — VA171FJ6 — B02 XMLAB 7575 X-X1E2
- + RCV DATA MARK 7 — VA171FE6 — B04 3J — CJ
- SERV* AUTO CALLPR P06 X-X1E2 5K — EK — VA050 + AUTO CALL PRESENT — EK4
- XMIT MODE 7 — VA164CJ6 — *A*OR — VA161 + ADAPT 7 DATA 4 — CM2
- RCV LINE SIG DET 7 — VA171FA6 — B03 XMLAB 7575 X-X1E2
- EXT CLK LI 7 — VA164CF2 — 3M — CM

* NOTE
* FULL FEATURE WIRING SHOWN
* WITH EIA SYNC LINE SET
* SEE VA000 FOR OTHER LINE SET

V A 1 6 7 000

01-26-72 309520C

EIA SYNC LINE INTERFACE CARD
DATE 01-26-72 MACH. 27RNB
LOG 600 FRAME 01
P.No. 1785464
IBM CORP. SDD BLK. EL

V A 1 6 7 000

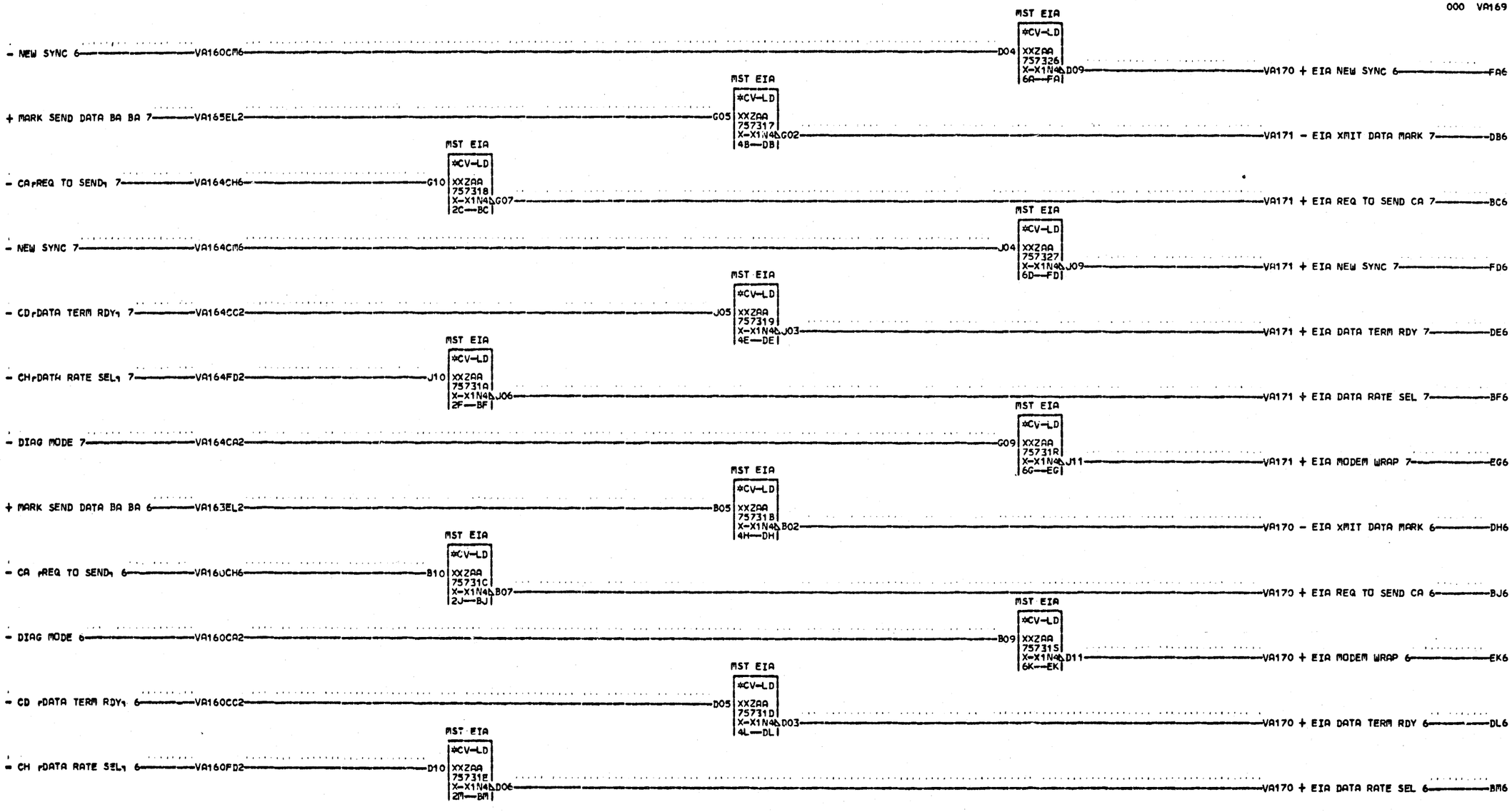

* NOTE
* FULL FEATURE WIRING SHOWN
* WITH EIA SYNC LINE SET
* SEE VA000 FOR OTHER LINE SET

VA169
000

01-26-72 309520C

EIA SYNC DRIVER CARD				
DATE	01-26-72	MACH. 27RNB		VA169 000
LOG	600	FRAME	01	
		P.N.	1785465	
IBM CORP.	SDD BLK.		FF	

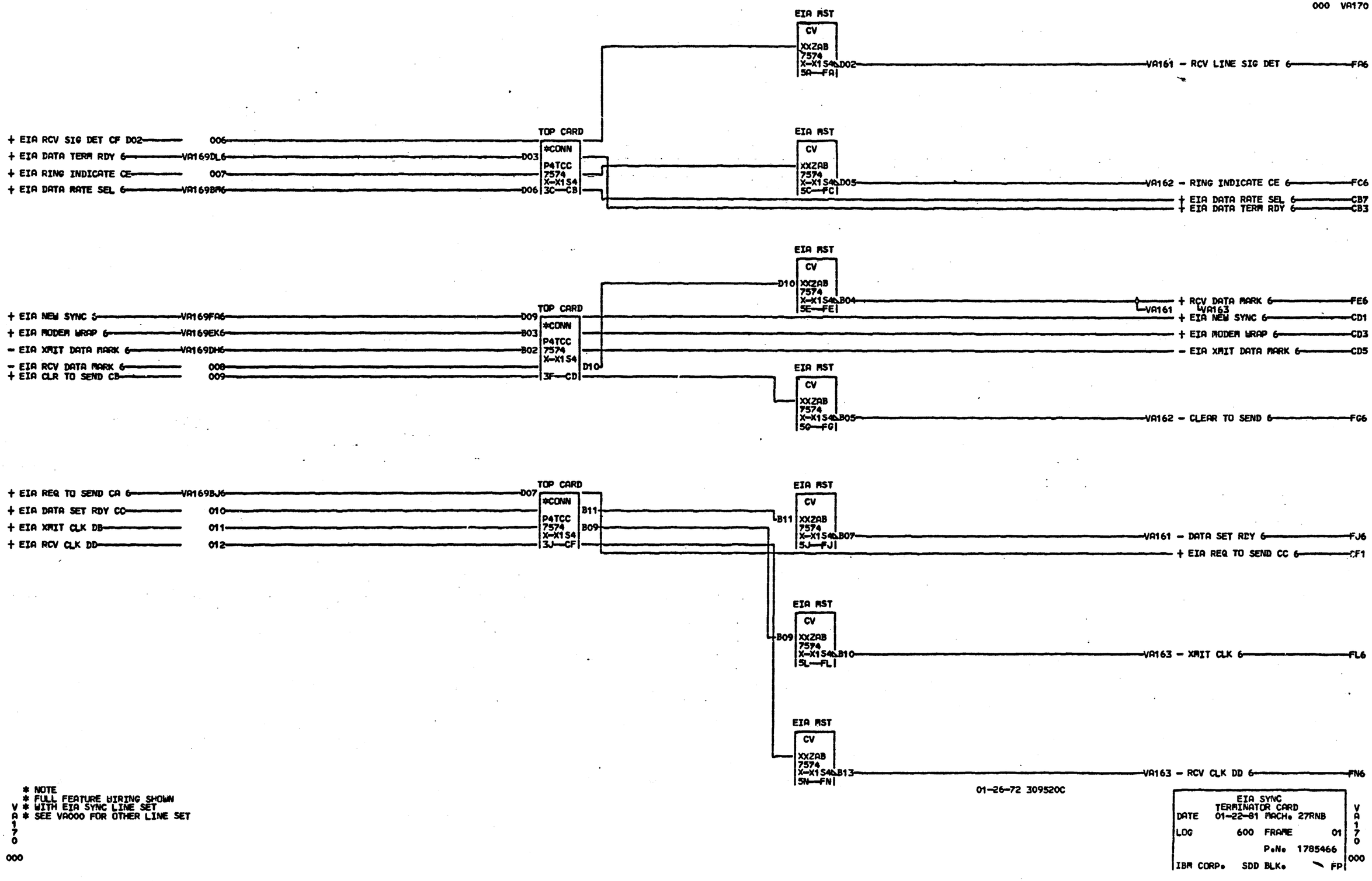

* NOTE
* FULL FEATURE WIRING SHOWN
* WITH EIA SYNC LINE SET
* SEE VA000 FOR OTHER LINE SET

VA170 000

01-26-72 309520C

EIA SYNC TERMINATOR CARD
DATE 01-22-81 MACH. 27RNB
LOG 600 FRAME 01
P.N. 1785466
IBM CORP. SDD BLK. FP

VA170 000

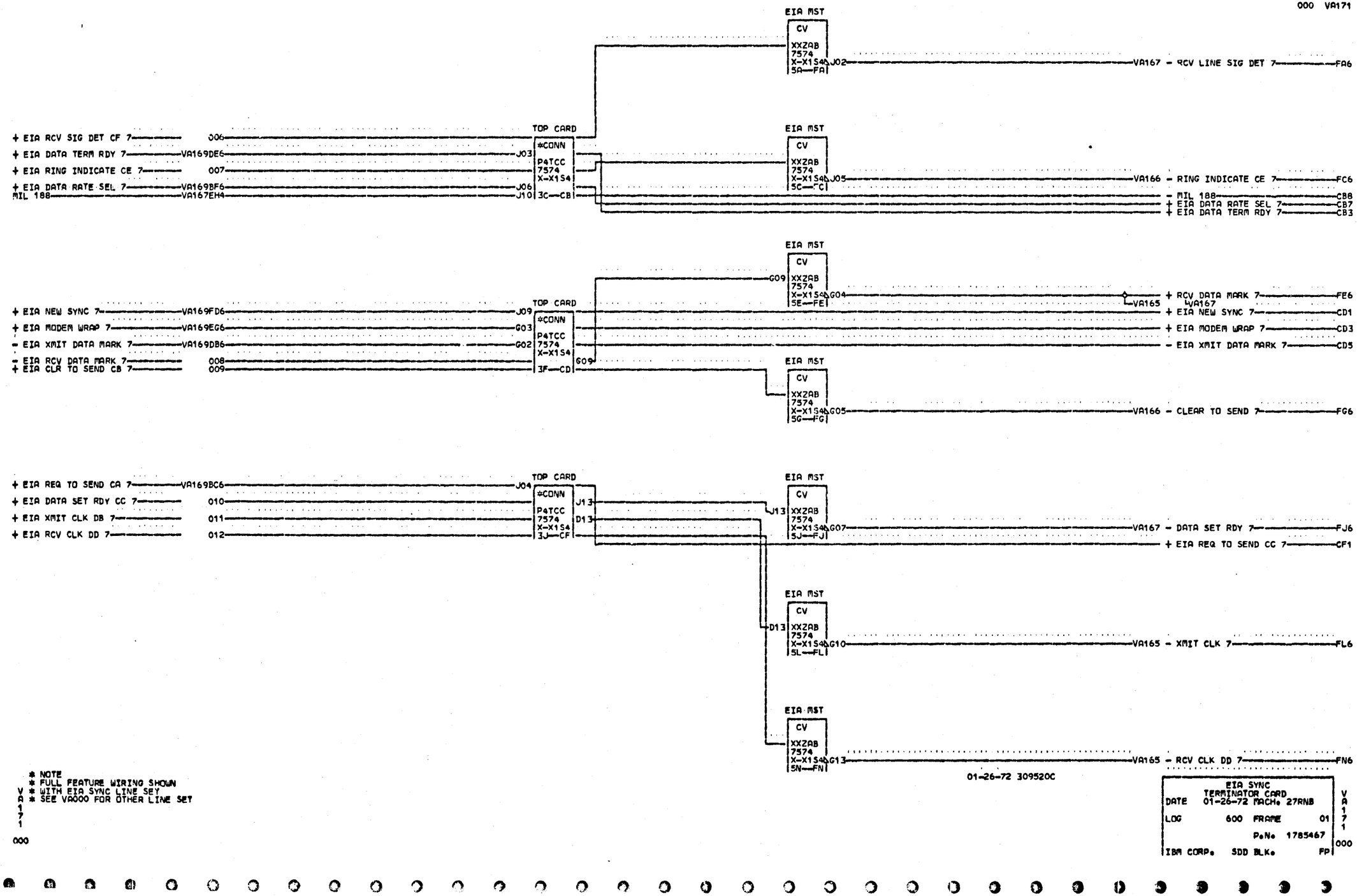

* NOTE
* FULL FEATURE WIRING SHOWN
* WITH EIA SYNC LINE SET
* SEE VA000 FOR OTHER LINE SET

V A 1 7 1
000

01-26-72 309520C

EIA SYNC TERMINATOR CARD
DATE 01-26-72 MACH. 27RNB
LOG 600 FRAME 01
P.N. 1785467
IBM CORP. SDD BLK. FP

V A 1 7 1 000

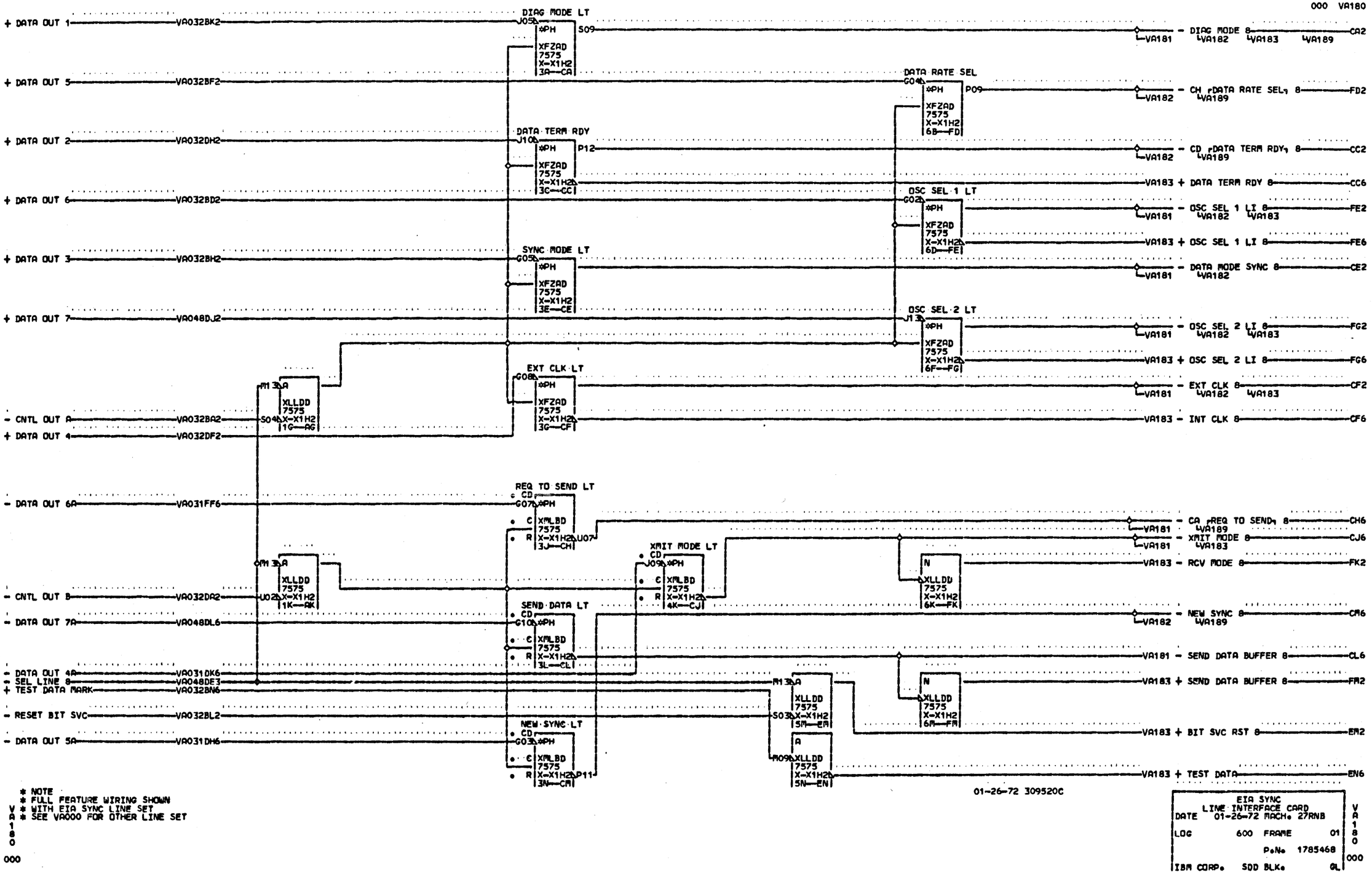
000 VA180
+ DATA OUT 1
VA032BK2
DIAG MODE LT
J05
S09
XFZAD 7575 X-X1H2 3A—CA
- DIAG MODE 8
VA181 VA182 VA183 VA189
CA2
+ DATA OUT 5
VA032BF2
DATA RATE SEL
G04
P09
XFZAD 7575 X-X1H2 6B—FD
- CH DATA RATE SEL 8
VA182 VA189
FD2
+ DATA OUT 2
VA032DH2
DATA TERM RDY
J10
P12
XFZAD 7575 X-X1H2 3C—CC
- CD DATA TERM RDY 8
VA182 VA189
CC2
VA183 + DATA TERM RDY 8
CC6
+ DATA OUT 6
VA032BD2
OSC SEL 1 LT
G02
XFZAD 7575 X-X1H2 6D—FE
- OSC SEL 1 LI 8
VA181 VA182 VA183
FE2
VA183 + OSC SEL 1 LI 8
FE6
+ DATA OUT 3
VA032BH2
SYNC MODE LT
G05
XFZAD 7575 X-X1H2 3E—CE
- DATA MODE SYNC 8
VA181 VA182
CE2
+ DATA OUT 7
VA048DJ2
OSC SEL 2 LT
J13
XFZAD 7575 X-X1H2 6F—FG
- OSC SEL 2 LI 8
VA181 VA182 VA183
FG2
VA183 + OSC SEL 2 LI 8
FG6
EXT CLK LT
G08
XFZAD 7575 X-X1H2 3G—CF
- EXT CLK 8
VA181 VA182 VA183
CF2
- CNTL OUT A
VA032BA2
M13 A
XLLDD 7575 X-X1H2 1G—AG
S04
VA183 - INT CLK 8
CF6
+ DATA OUT 4
VA032DF2
REQ TO SEND LT
- DATA OUT 6A
VA031FF6
G07
XMLBD 7575 X-X1H2 3J—CH
U07
- CA REQ TO SEND 8
VA181 VA189
CH6
- XMIT MODE 8
VA181 VA183
CJ6
XMIT MODE LT
J09
XMLBD 7575 X-X1H2 4K—CJ
M13 A
XLLDD 7575 X-X1H2 1K—AK
U02
- CNTL OUT B
VA032DA2
N
XLLDD 7575 X-X1H2 6K—FK
VA183 - RCV MODE 8
FK2
SEND DATA LT
G10
XMLBD 7575 X-X1H2 3L—CL
- DATA OUT 7A
VA048DL6
- NEW SYNC 8
VA182 VA189
CM6
VA181 - SEND DATA BUFFER 8
CL6
- DATA OUT 4A
VA031DK6
- SEL LINE 8
VA048DE3
+ TEST DATA MARK
VA032BN6
M13 A
XLLDD 7575 X-X1H2 5M—EM
S03
N
XLLDD 7575 X-X1H2 6M—FM
VA183 + SEND DATA BUFFER 8
FM2
- RESET BIT SVC
VA032BL2
NEW SYNC LT
G03
XMLBD 7575 X-X1H2 3N—CM
P11
VA183 + BIT SVC RST 8
EM2
- DATA OUT 5A
VA031DH6
M09
XLLDD 7575 X-X1H2 5N—EN
VA183 + TEST DATA
EN6
* NOTE
* FULL FEATURE WIRING SHOWN
* WITH EIA SYNC LINE SET
* SEE VA000 FOR OTHER LINE SET
VA180
000
01-26-72 309520C
EIA SYNC
LINE INTERFACE CARD
DATE 01-26-72 MACH. 27RNB
LOG 600 FRAME 01
P.N. 1785468
IBM CORP. SDD BLK. GL
VA180
000

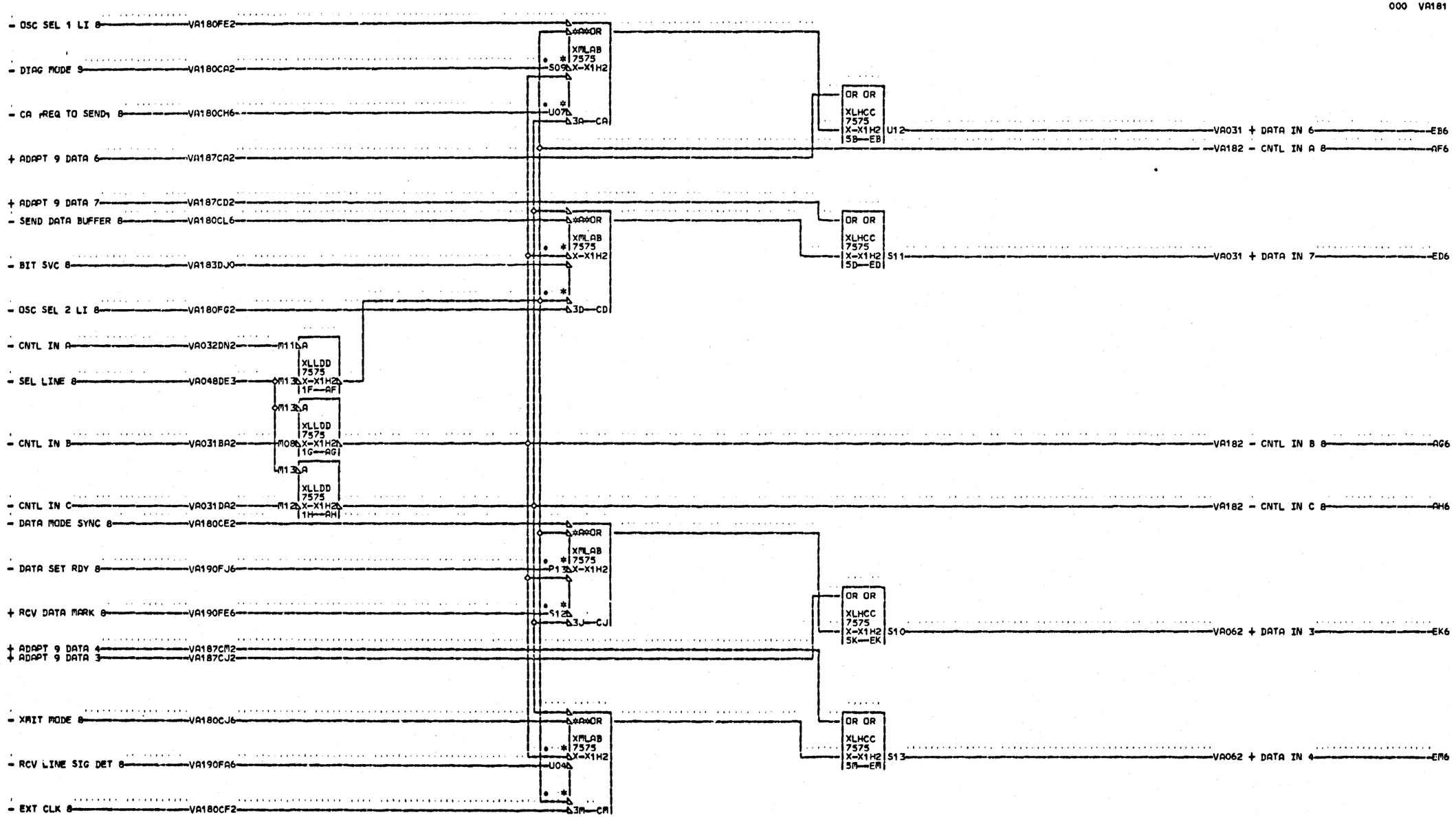

* NOTE
* FULL FEATURE WIRING SHOWN
* WITH EIA SYNC LINE SET
* SEE VA000 FOR OTHER LINE SET

V A 1 8 1 000

01-26-72 309520C

EIA SYNC
LINE INTERFACE CARD
DATE 01-26-72 MACH. 27RNB

LOG 600 FRAME 01

P.No. 1785469

IBM CORP. SDD BLK. EN

V A 1 8 1 000

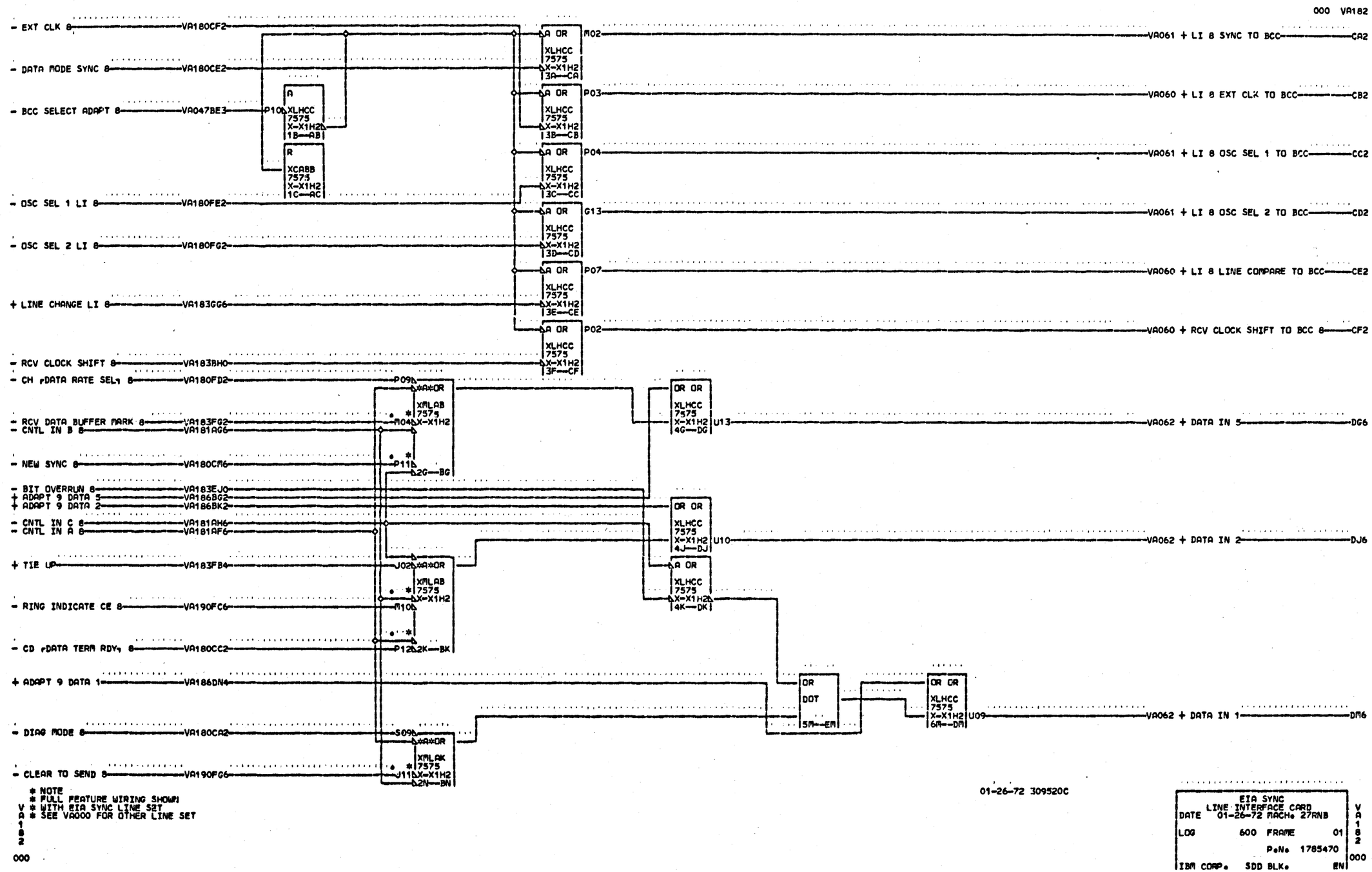
000 VA182
- EXT CLK 8 VA180CF2
- DATA MODE SYNC 8 VA180CE2
- BCC SELECT ADAPT 8 VA047BE3
- OSC SEL 1 LI 8 VA180FE2
- OSC SEL 2 LI 8 VA180FG2
+ LINE CHANGE LI 8 VA183GG6
- RCV CLOCK SHIFT 8 VA183BH0
- CH ,DATA RATE SEL, 8 VA180FD2
- RCV DATA BUFFER MARK 8 VA183FG2
- CNTL IN B 8 VA181AG6
- NEW SYNC 8 VA180CM6
- BIT OVERRUN 8 VA183EJ0
+ ADAPT 9 DATA 5 VA186BG2
+ ADAPT 9 DATA 2 VA186BK2
- CNTL IN C 8 VA181AH6
- CNTL IN A 8 VA181AF6
+ TIE UP VA183FB4
- RING INDICATE CE 8 VA190FC6
- CD ,DATA TERM RDY, 8 VA180CC2
+ ADAPT 9 DATA 1 VA186DN4
- DIAG MODE 8 VA180CA2
- CLEAR TO SEND 8 VA190FG6
VA061 + LI 8 SYNC TO BCC CA2
VA060 + LI 8 EXT CLK TO BCC CB2
VA061 + LI 8 OSC SEL 1 TO BCC CC2
VA061 + LI 8 OSC SEL 2 TO BCC CD2
VA060 + LI 8 LINE COMPARE TO BCC CE2
VA060 + RCV CLOCK SHIFT TO BCC 8 CF2
VA062 + DATA IN 5 DG6
VA062 + DATA IN 2 DJ6
VA062 + DATA IN 1 DM6
* NOTE
* FULL FEATURE WIRING SHOWN
* WITH EIA SYNC LINE SET
* SEE VA000 FOR OTHER LINE SET
VA182
000
01-26-72 309520C
EIA SYNC
LINE INTERFACE CARD
DATE 01-26-72 MACH. 27RNB
LOG 600 FRAME 01
P.N. 1785470
IBM CORP. SDD BLK. EN
VA182
000

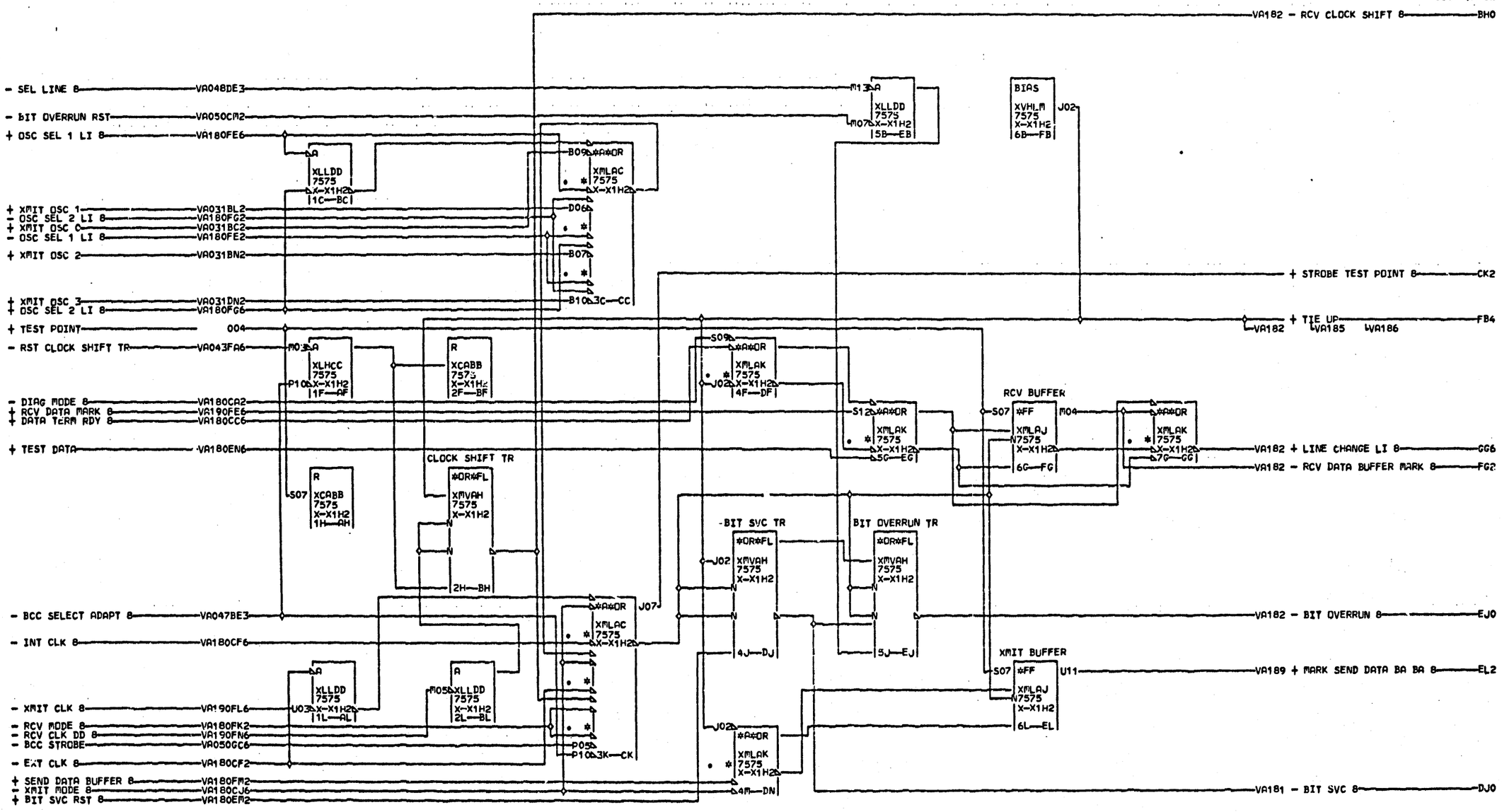

* NOTE
* FULL FEATURE WIRING SHOWN
V * WITH EIA SYNC LINE SET
A * AND LINE INTERFACE CARD
1 * PN 8211452 INSTALLED
8 * SEE VA000 FOR OTHER
3 * LINE SETS

000

01-26-72 309520C
11-11-74 311286

EIA SYNC LINE INTERFACE CARD				V A 1 8 3
DATE 11-22-74 MACH. 27RNB				
LOG	400	FRAME	01	
		P.N. 1785471		000
IBM CORP.	SDD BLK.		GH	

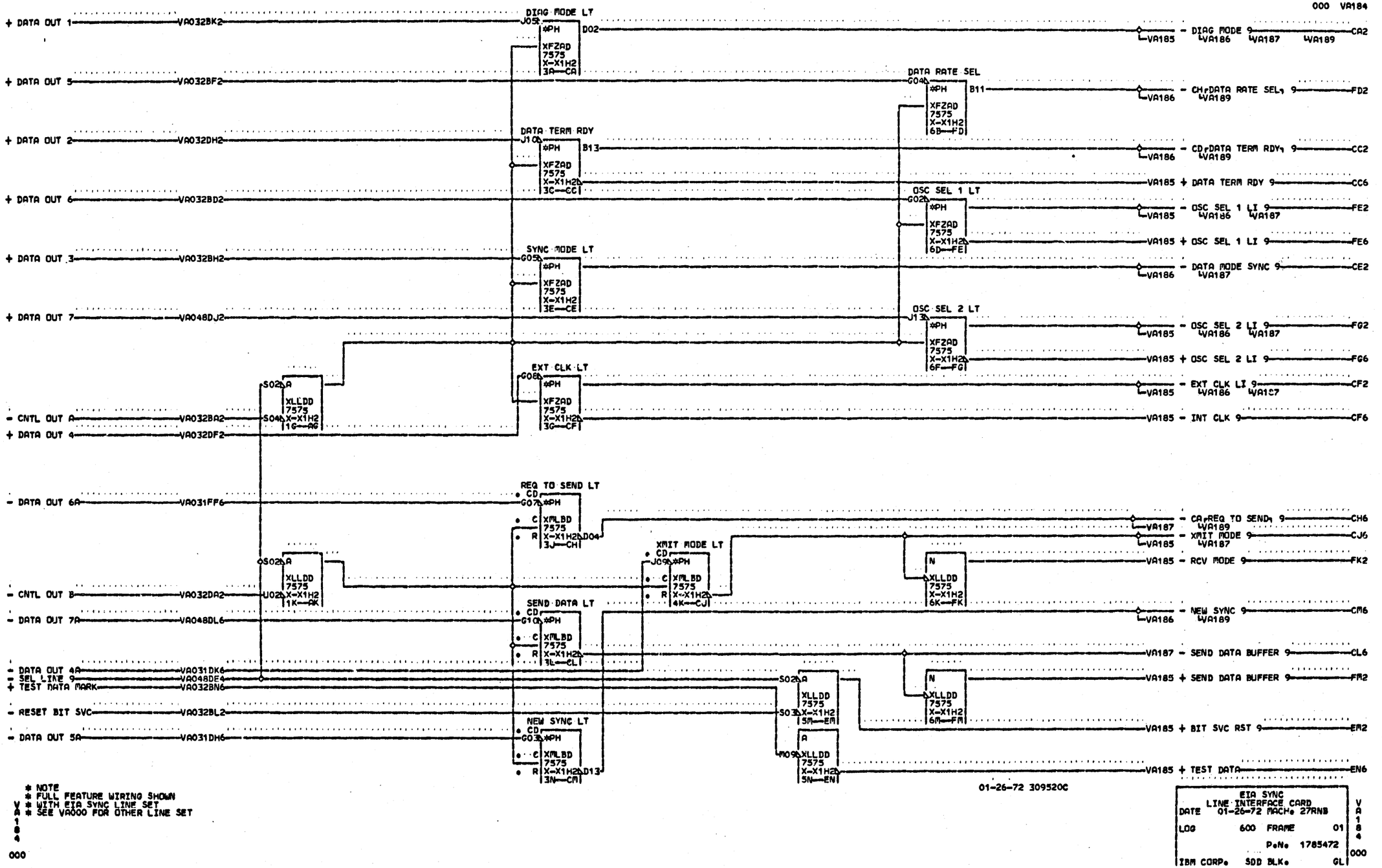
000 VA184
+ DATA OUT 1
VA032BK2
DIAG MODE LT
J05
*PH
XFZAD
7575
X-X1H2
3A—CA
D02
VA185 - DIAG MODE 9 VA186 VA187 VA189 CA2
+ DATA OUT 5
VA032BF2
DATA RATE SEL
G04
*PH
XFZAD
7575
X-X1H2
6B—FD
B11
VA186 - CH,DATA RATE SEL, 9 VA189 FD2
+ DATA OUT 2
VA032DH2
DATA TERM RDY
J10
*PH
XFZAD
7575
X-X1H2
3C—CC
B13
VA186 - CD,DATA TERM RDY, 9 VA189 CC2
VA185 + DATA TERM RDY 9 CC6
+ DATA OUT 6
VA032BD2
OSC SEL 1 LT
G02
*PH
XFZAD
7575
X-X1H2
6D—FE
VA185 - OSC SEL 1 LI 9 VA186 VA187 FE2
VA185 + OSC SEL 1 LI 9 FE6
+ DATA OUT 3
VA032BH2
SYNC MODE LT
G05
*PH
XFZAD
7575
X-X1H2
3E—CE
VA186 - DATA MODE SYNC 9 VA187 CE2
+ DATA OUT 7
VA048DJ2
OSC SEL 2 LT
J13
*PH
XFZAD
7575
X-X1H2
6F—FG
VA185 - OSC SEL 2 LI 9 VA186 VA187 FG2
VA185 + OSC SEL 2 LI 9 FG6
EXT CLK LT
G06
*PH
XFZAD
7575
X-X1H2
3G—CF
VA185 - EXT CLK LI 9 VA186 VA187 CF2
VA185 - INT CLK 9 CF6
S02
A
XLLDD
7575
X-X1H2
1G—AG
- CNTL OUT A
VA032BA2
S04
+ DATA OUT 4
VA032DF2
- DATA OUT 6A
VA031FF6
REQ TO SEND LT
G07
CD
*PH
C XMLBD
R 7575
X-X1H2
3J—CH
D04
VA187 - CA,REQ TO SEND, 9 VA189 CH6
VA185 - XMIT MODE 9 VA187 CJ6
XMIT MODE LT
J09
4K—CJ
VA185 - RCV MODE 9 FK2
N
XLLDD
6K—FK
- CNTL OUT B
VA032DA2
U02
1K—AK
- DATA OUT 7A
VA048DL6
SEND DATA LT
G10
3L—CL
VA186 - NEW SYNC 9 VA189 CM6
VA187 - SEND DATA BUFFER 9 CL6
- DATA OUT 4A
VA031DK6
- SEL LINE 9
VA048DE4
+ TEST DATA MARK
VA032BN6
S03
5M—EM
VA185 + SEND DATA BUFFER 9 FM2
6M—FM
- RESET BIT SVC
VA032BL2
- DATA OUT 5A
VA031DH6
NEW SYNC LT
G03
3N—CM
M09
5N—EN
VA185 + BIT SVC RST 9 EM2
VA185 + TEST DATA EN6
* NOTE
* FULL FEATURE WIRING SHOWN
* WITH EIA SYNC LINE SET
* SEE VA000 FOR OTHER LINE SET
V A 1 8 4 000
01-26-72 309520C
EIA SYNC
LINE INTERFACE CARD
DATE 01-26-72 MACH. 27RNB
LOG 600 FRAME 01
P.N. 1785472
IBM CORP. SDD BLK. GL
V A 1 8 4 000

000 VA185

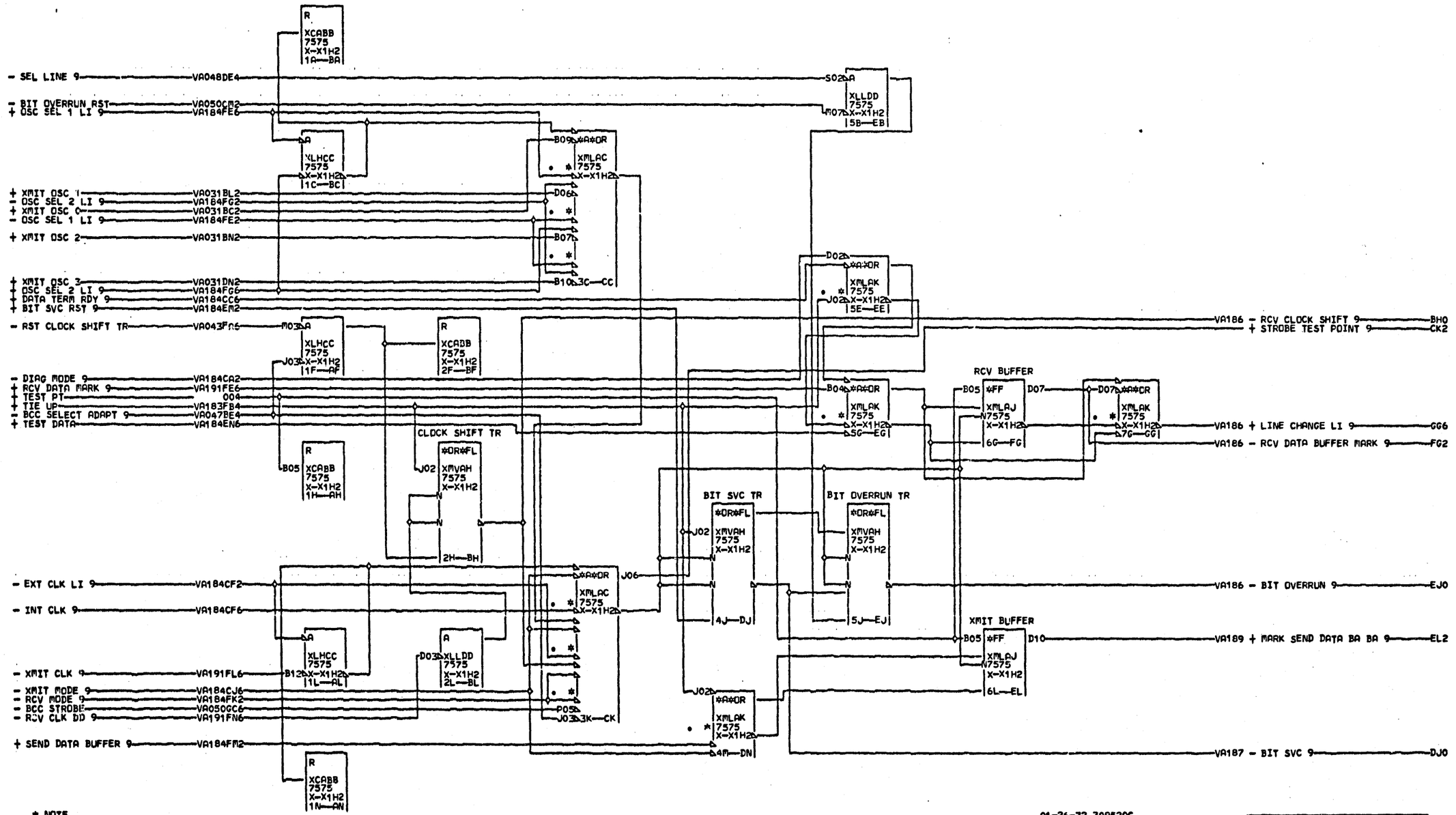

* NOTE
* FULL FEATURE WIRING SHOWN
V * WITH EIA SYNC LINE SET
A * AND LINE INTERFACE CARD
1 * PN 8211452 INSTALLED
8 * SEE VA000 FOR OTHER
5 * LINE SETS

000

01-26-72 309520C
11-11-74 311286

EIA SYNC LINE INTERFACE CARD			V
DATE 11-22-74 MACH. 27RNB			A
LOG 400	FRAME	01	1
	P.N. 1785473		8
IBM CORP. SDD BLK.		GH	5
			000

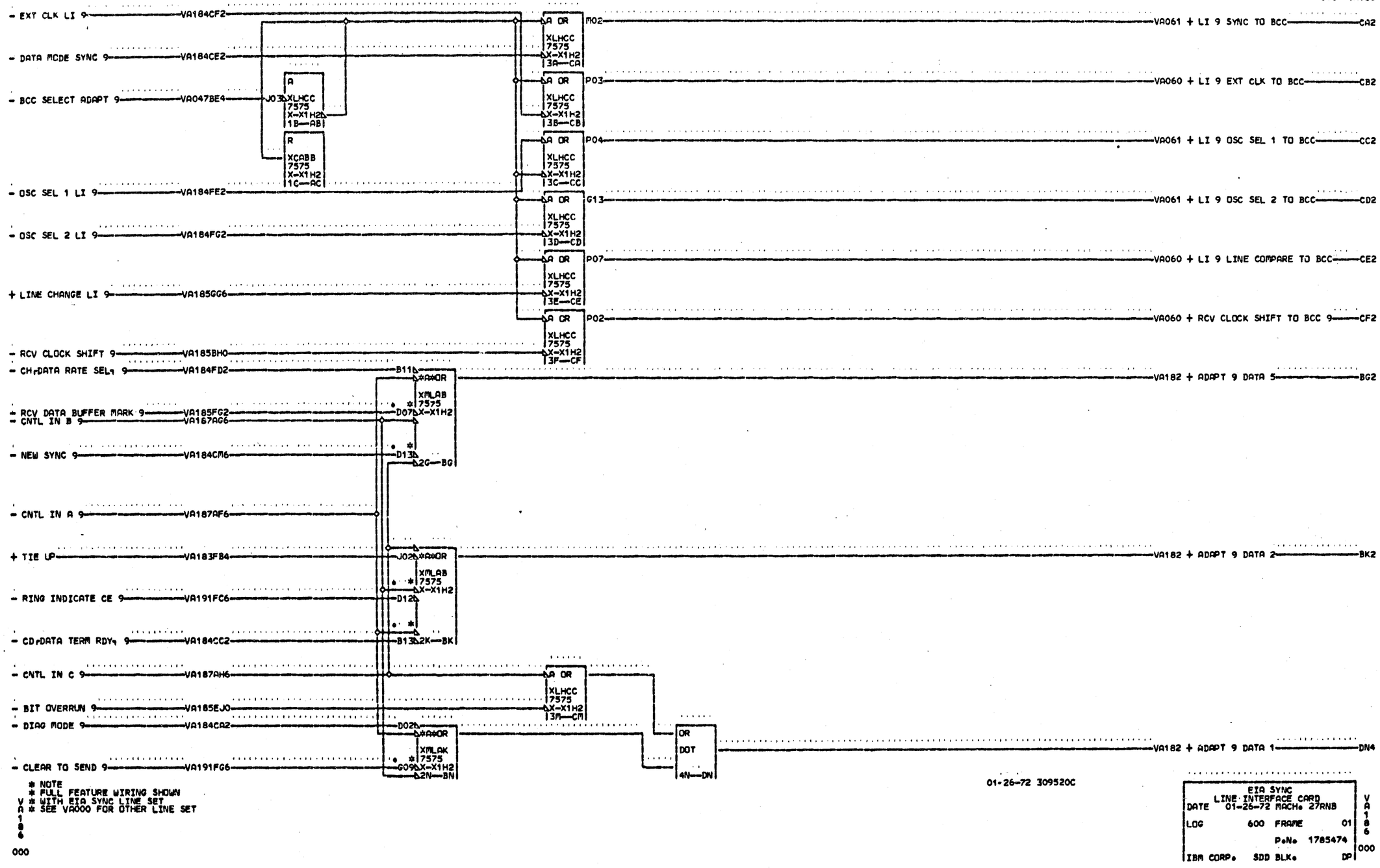

* NOTE
* FULL FEATURE WIRING SHOWN
* WITH EIA SYNC LINE SET
* SEE VA000 FOR OTHER LINE SET

VA186 000

01-26-72 309520C

EIA SYNC
LINE INTERFACE CARD
DATE 01-26-72 MACH. 27RNB
LOG 600 FRAME 01
P.N. 1785474
IBM CORP. SDD BLK. DP

VA186 000

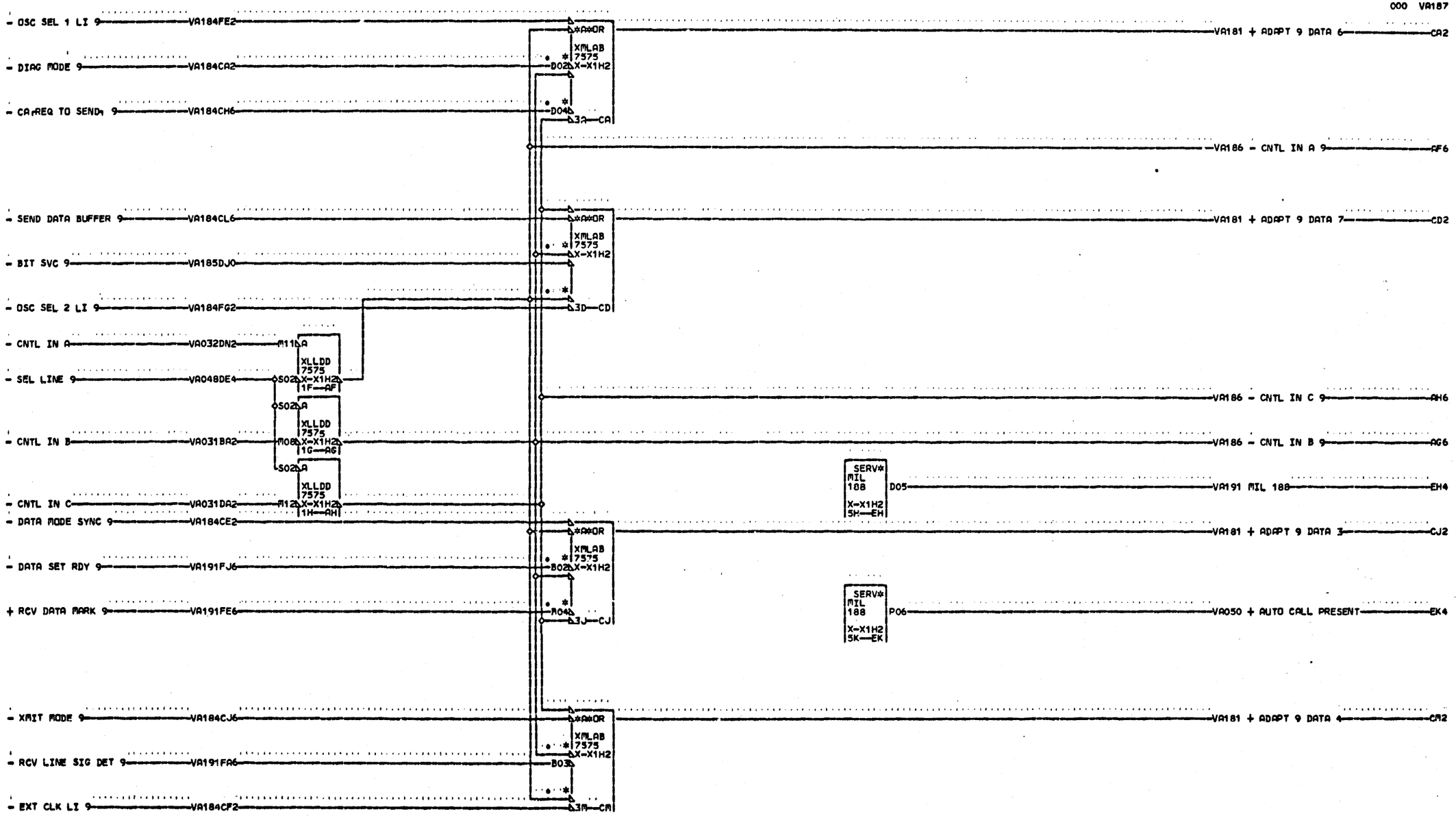

* NOTE
* FULL FEATURE WIRING SHOWN
* WITH EIA SYNC LINE SET
* SEE VA000 FOR OTHER LINE SET

VA187
000

01-26-72 309520C

EIA SYNC
LINE INTERFACE CARD
DATE 01-26-72 MACH. 27RNB
LOG 600 FRAME 01
P.N. 1785475
IBM CORP. SDD BLK. EL

VA187 000

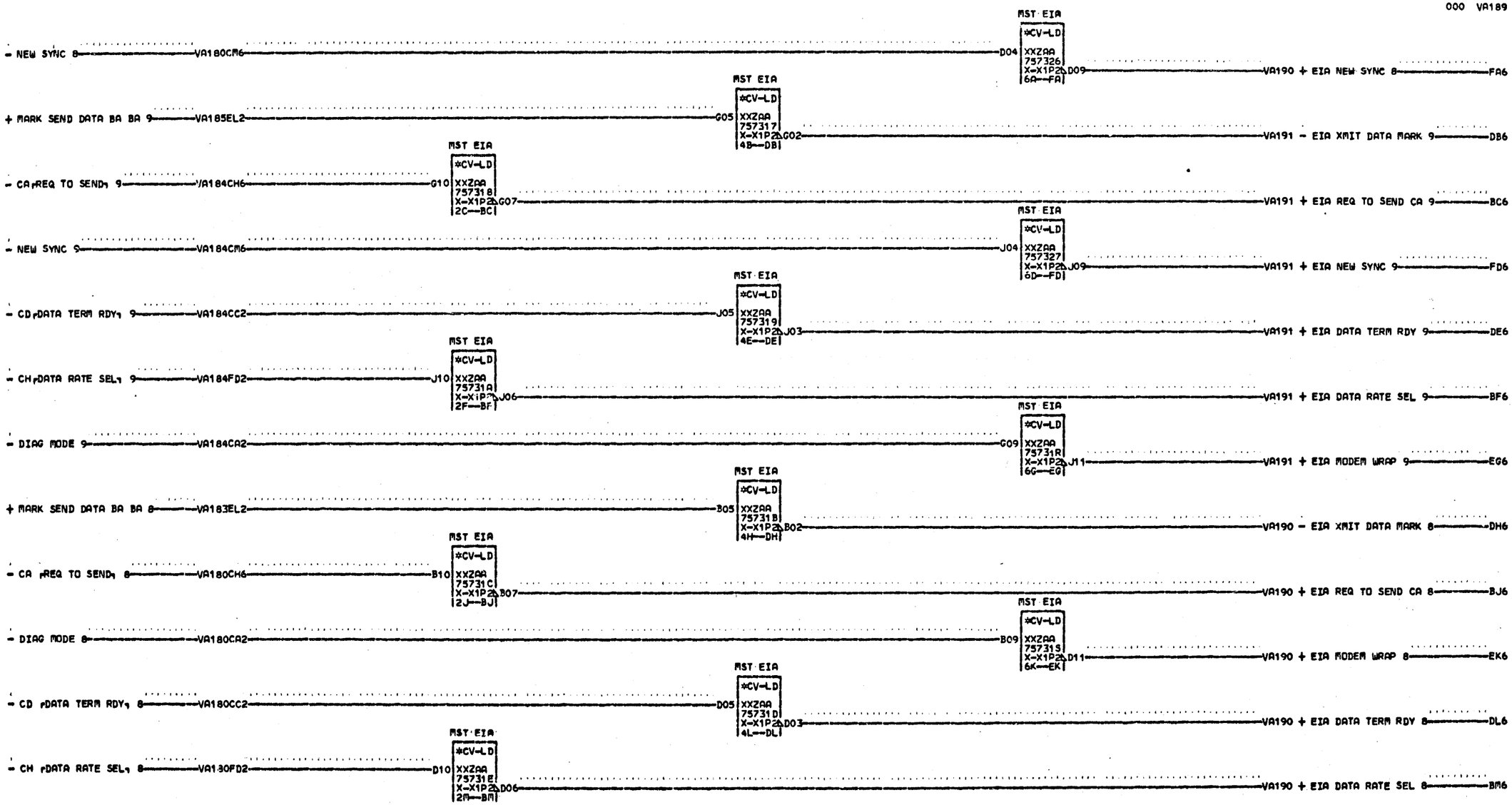

* NOTE
* FULL FEATURE WIRING SHOWN
* WITH EIA SYNC LINE SET
* SEE VA000 FOR OTHER LINE SET

01-26-72 309520C

EIA SYNC DRIVER CARD			
DATE	01-26-72 MACH= 27RNB		
LOC	600	FRAME	01
		P=N=	1785476
IBM CORP=	SDD BLK=		FF

VA189 000

000 VA190

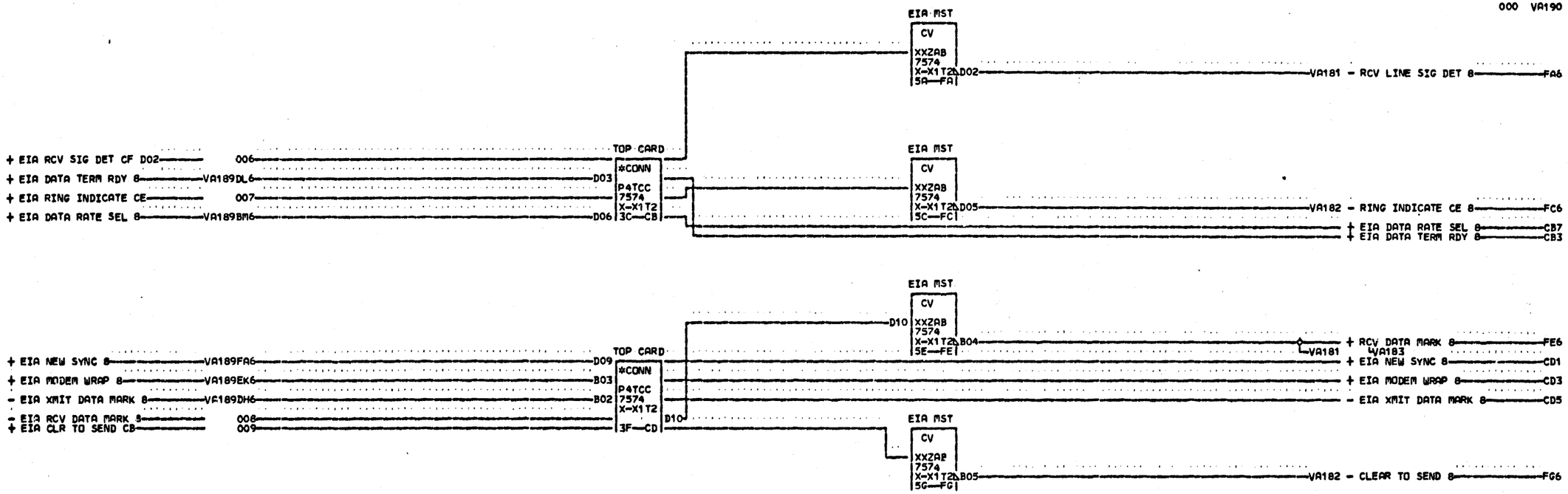

01-26-72 309520C

* NOTE
* FULL FEATURE WIRING SHOWN
* WITH EIA SYNC LINE SET
* SEE VA000 FOR OTHER LINE SET

VA1900

000

EIA SYNC TERMINATOR CARD
DATE 01-26-72 MACH. 27RNB
LOG 600 FRAME 01
P.N. 1785477
IBM CORP. SDD BLK. FP

VA190 000

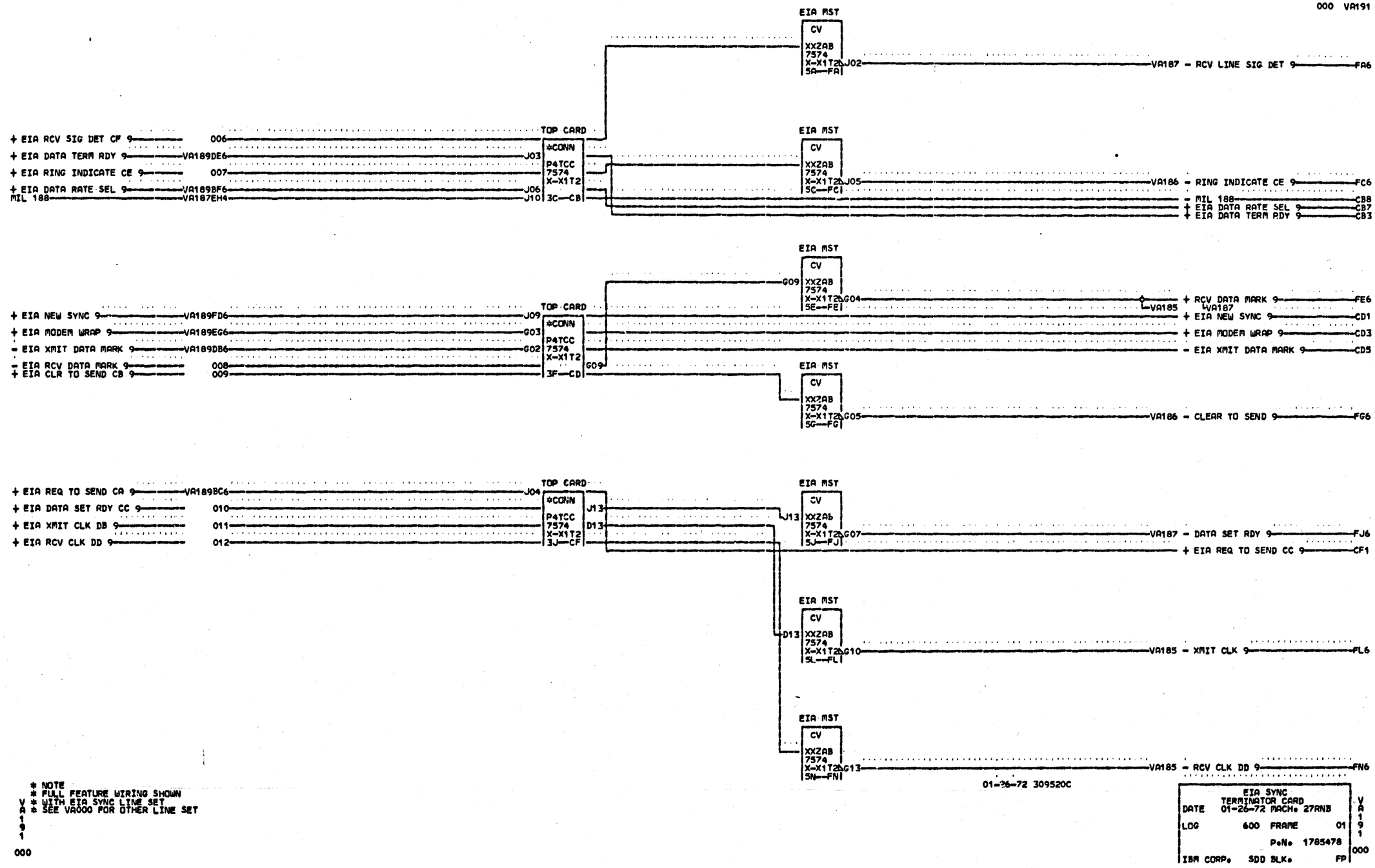
000 VA191
EIA MST
CV
XXZAB
7574
X-X1T2
5A—FA
J02
VA187 - RCV LINE SIG DET 9
FA6
+ EIA RCV SIG DET CF 9
006
TOP CARD
*CONN
P4TCC
7574
X-X1T2
3C—CB
+ EIA DATA TERM RDY 9
VA189DE6
J03
+ EIA RING INDICATE CE 9
007
+ EIA DATA RATE SEL 9
VA189BF6
J06
MIL 188
VA187EH4
J10
5C—FC
J05
VA186 - RING INDICATE CE 9
FC6
- MIL 188
CB8
+ EIA DATA RATE SEL 9
CB7
+ EIA DATA TERM RDY 9
CB3
G09
5E—FE
G04
+ RCV DATA MARK 9
FE6
VA187
VA185
+ EIA NEW SYNC 9
VA189FD6
J09
+ EIA MODEM WRAP 9
VA189EG6
G03
- EIA XMIT DATA MARK 9
VA189DB6
G02
- EIA RCV DATA MARK 9
008
+ EIA CLR TO SEND CB 9
009
3F—CD
+ EIA NEW SYNC 9
CD1
+ EIA MODEM WRAP 9
CD3
- EIA XMIT DATA MARK 9
CD5
5G—FG
G05
VA186 - CLEAR TO SEND 9
FG6
+ EIA REQ TO SEND CA 9
VA189BC6
J04
+ EIA DATA SET RDY CC 9
010
+ EIA XMIT CLK DB 9
011
+ EIA RCV CLK DD 9
012
3J—CF
J13
D13
5J—FJ
G07
VA187 - DATA SET RDY 9
FJ6
+ EIA REQ TO SEND CC 9
CF1
5L—FL
G10
VA185 - XMIT CLK 9
FL6
5N—FN
G13
VA185 - RCV CLK DD 9
FN6
01-26-72 309520C
* NOTE
* FULL FEATURE WIRING SHOWN
* WITH EIA SYNC LINE SET
* SEE VA000 FOR OTHER LINE SET
VA191
000
EIA SYNC
TERMINATOR CARD
DATE 01-26-72 MACH. 27RNB
LOG 600 FRAME 01
P.N. 1785478
IBM CORP. SDD BLK. FP
VA191
000

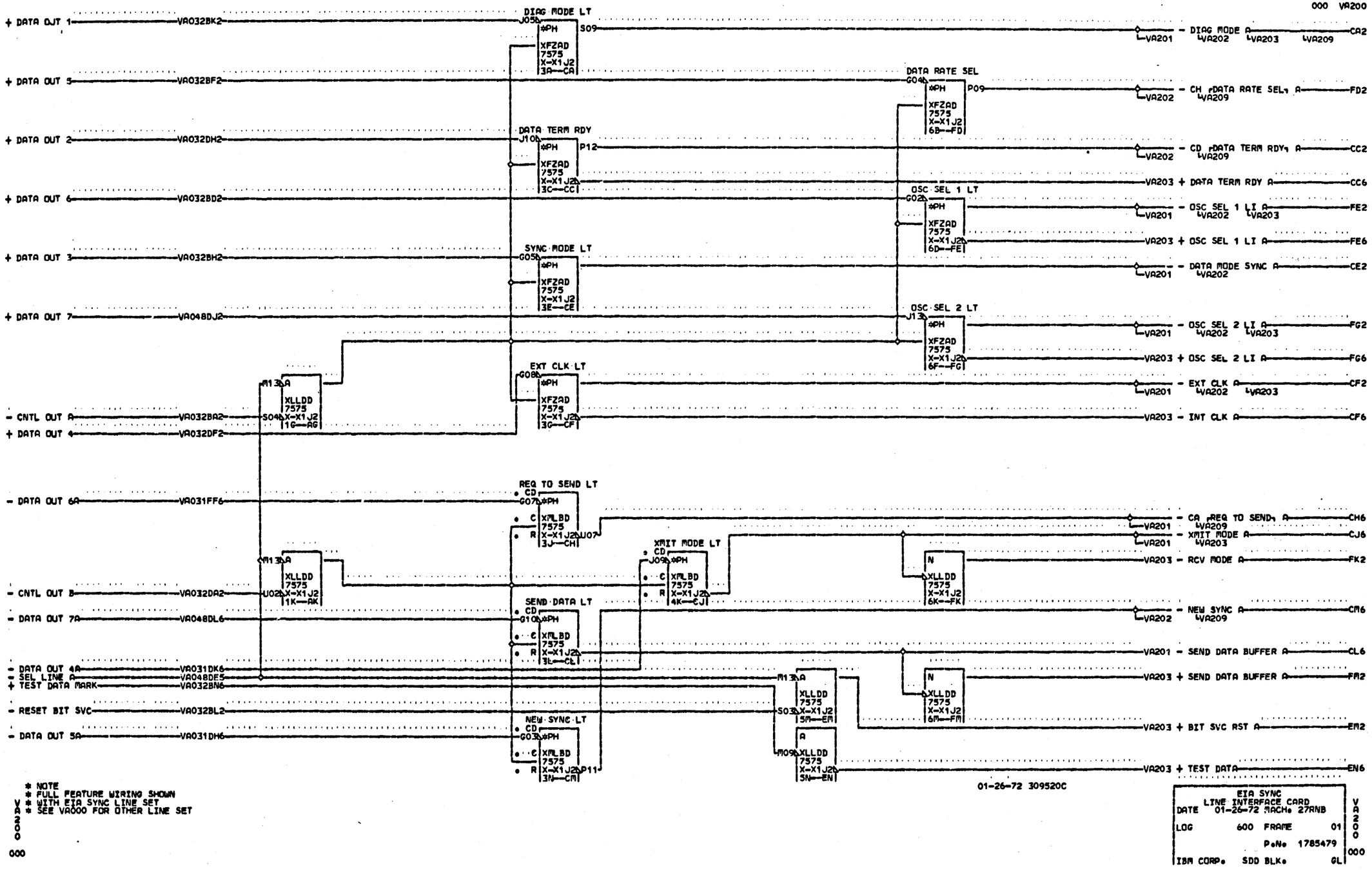
000 VA200
+ DATA OUT 1 VA032BK2
DIAG MODE LT J05 *PH XFZAD 7575 X-X1 J2 3A—CA S09
- DIAG MODE A CA2
VA201 VA202 VA203 VA209
+ DATA OUT 5 VA032BF2
DATA RATE SEL G04 *PH XFZAD 7575 X-X1 J2 6B—FD P09
- CH DATA RATE SEL A FD2
VA202 VA209
+ DATA OUT 2 VA032DH2
DATA TERM RDY J10 *PH XFZAD 7575 X-X1 J2 3C—CC P12
- CD DATA TERM RDY A CC2
VA202 VA209
VA203 + DATA TERM RDY A CC6
+ DATA OUT 6 VA032BD2
OSC SEL 1 LT G02 *PH XFZAD 7575 X-X1 J2 6D—FE
- OSC SEL 1 LI A FE2
VA201 VA202 VA203
VA203 + OSC SEL 1 LI A FE6
+ DATA OUT 3 VA032BH2
SYNC MODE LT G05 *PH XFZAD 7575 X-X1 J2 3E—CE
- DATA MODE SYNC A CE2
VA201 VA202
+ DATA OUT 7 VA048DJ2
OSC SEL 2 LT J13 *PH XFZAD 7575 X-X1 J2 6F—FG
- OSC SEL 2 LI A FG2
VA201 VA202 VA203
VA203 + OSC SEL 2 LI A FG6
EXT CLK LT G08 *PH XFZAD 7575 X-X1 J2 3G—CF
- EXT CLK A CF2
VA201 VA202 VA203
M13 A XLLDD 7575 S04 X-X1 J2 1G—AG
- CNTL OUT A VA032BA2
+ DATA OUT 4 VA032DF2
VA203 - INT CLK A CF6
REQ TO SEND LT CD G07 *PH C XMLBD 7575 R X-X1 J2 U07 3J—CH
- DATA OUT 6A VA031FF6
- CA REQ TO SEND A CH6
VA201 VA209
XMIT MODE LT CD J09 *PH C XMLBD 7575 R X-X1 J2 4K—CJ
- XMIT MODE A CJ6
VA201 VA203
N XLLDD 7575 X-X1 J2 6K—FK
VA203 - RCV MODE A FK2
M13 A XLLDD 7575 U02 X-X1 J2 1K—AK
- CNTL OUT B VA032DA2
SEND DATA LT CD G10 *PH C XMLBD 7575 R X-X1 J2 3L—CL
- DATA OUT 7A VA048DL6
- NEW SYNC A CM6
VA202 VA209
VA201 - SEND DATA BUFFER A CL6
- DATA OUT 4A VA031DK6
- SEL LINE A VA048DE5
+ TEST DATA MARK VA032BN6
M13 A XLLDD 7575 S03 X-X1 J2 5M—EM
N XLLDD 7575 X-X1 J2 6M—FM
VA203 + SEND DATA BUFFER A FM2
- RESET BIT SVC VA032BL2
VA203 + BIT SVC RST A EM2
NEW SYNC LT CD G03 *PH C XMLBD 7575 R X-X1 J2 P11 3N—CM
- DATA OUT 5A VA031DH6
A XLLDD 7575 M09 X-X1 J2 5N—EN
VA203 + TEST DATA EN6
* NOTE
* FULL FEATURE WIRING SHOWN
* WITH EIA SYNC LINE SET
* SEE VA000 FOR OTHER LINE SET
VA200
000
01-26-72 309520C
EIA SYNC
LINE INTERFACE CARD
DATE 01-26-72 MACH. 27RNB
LOG 600 FRAME 01
P.N. 1785479
IBM CORP. SDD BLK. GL
VA200
000

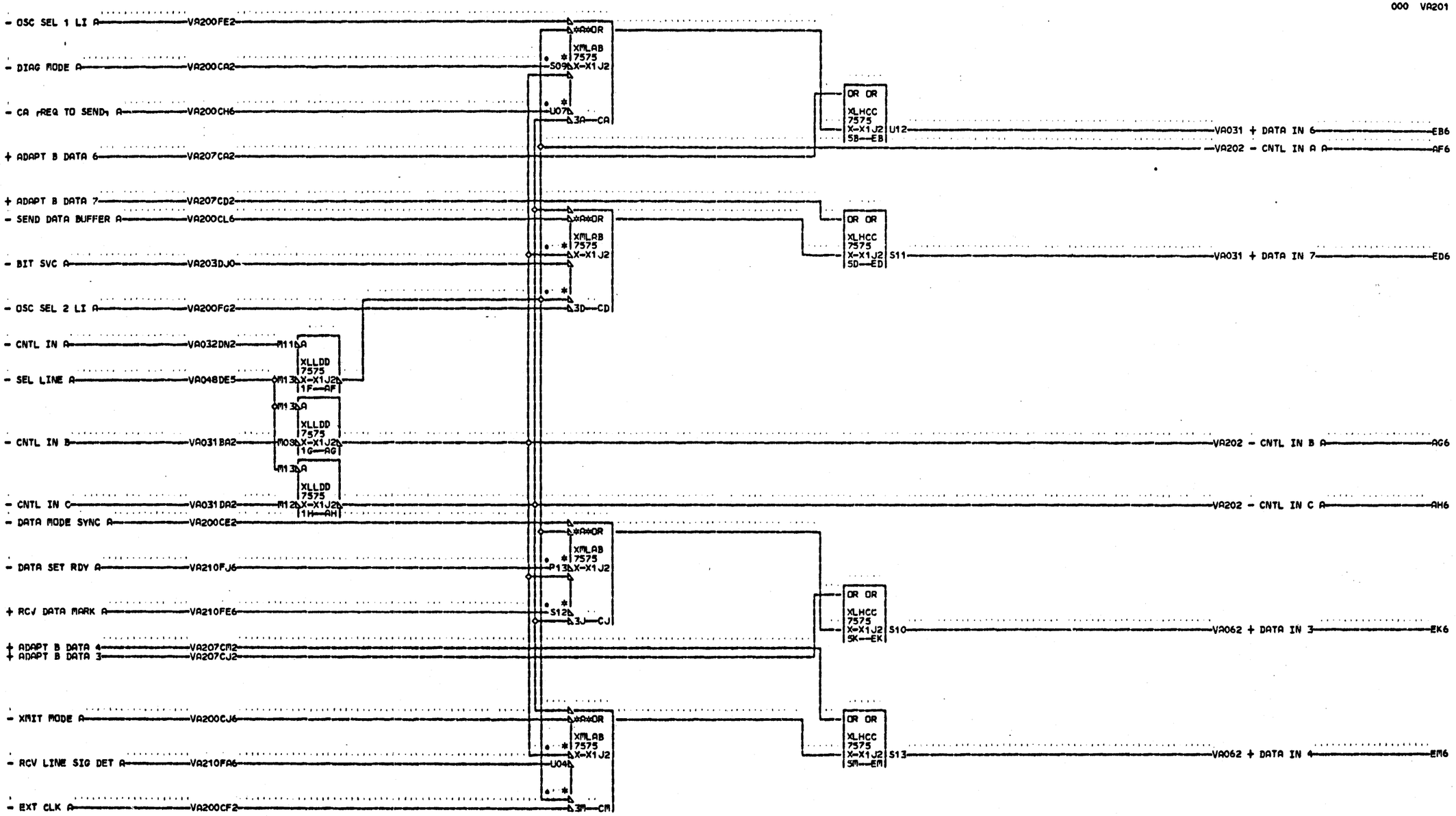

* NOTE
* FULL FEATURE WIRING SHOWN
* WITH EIA SYNC LINE SET
* SEE VA000 FOR OTHER LINE SET

VA201
000

01-26-72 309520C

EIA SYNC
LINE INTERFACE CARD
DATE 01-26-72 MACH. 27RNB
LOG 600 FRAME 01
PaNo 1785480
IBM CORP. SDD BLK. EN

VA201 000

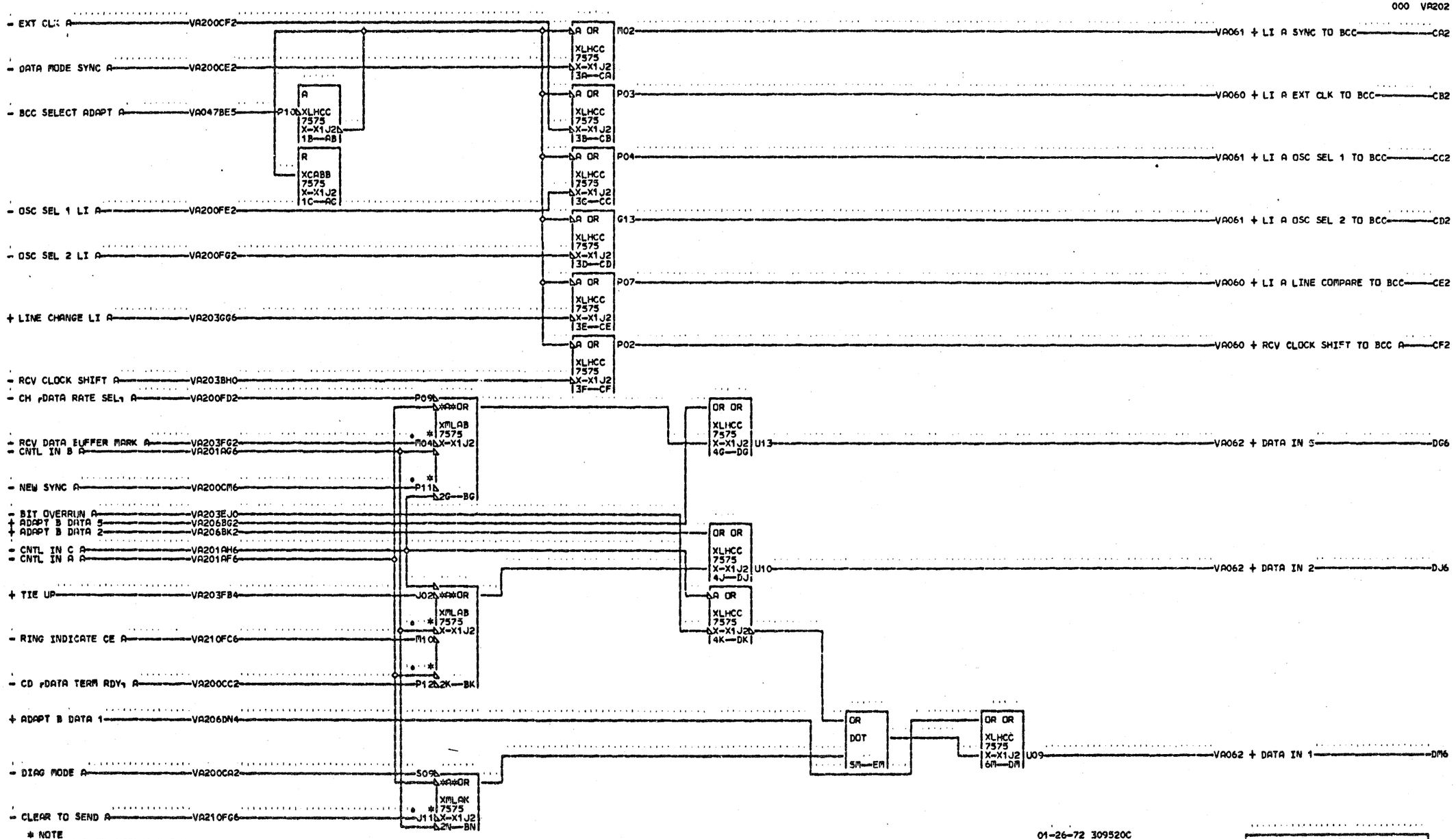

* NOTE
* FULL FEATURE WIRING SHOWN
* WITH EIA SYNC LINE SET
* SEE VA000 FOR OTHER LINE SET

V A 2 0 2 C00

01-26-72 309520C

EIA SYNC LINE INTERFACE CARD
DATE 01-26-72 MACH. 27RNB
LOG 600 FRAME 01
P.N. 1785481
IBM CORP. SDD BLK. EN

V A 2 0 2 000

000 VA203

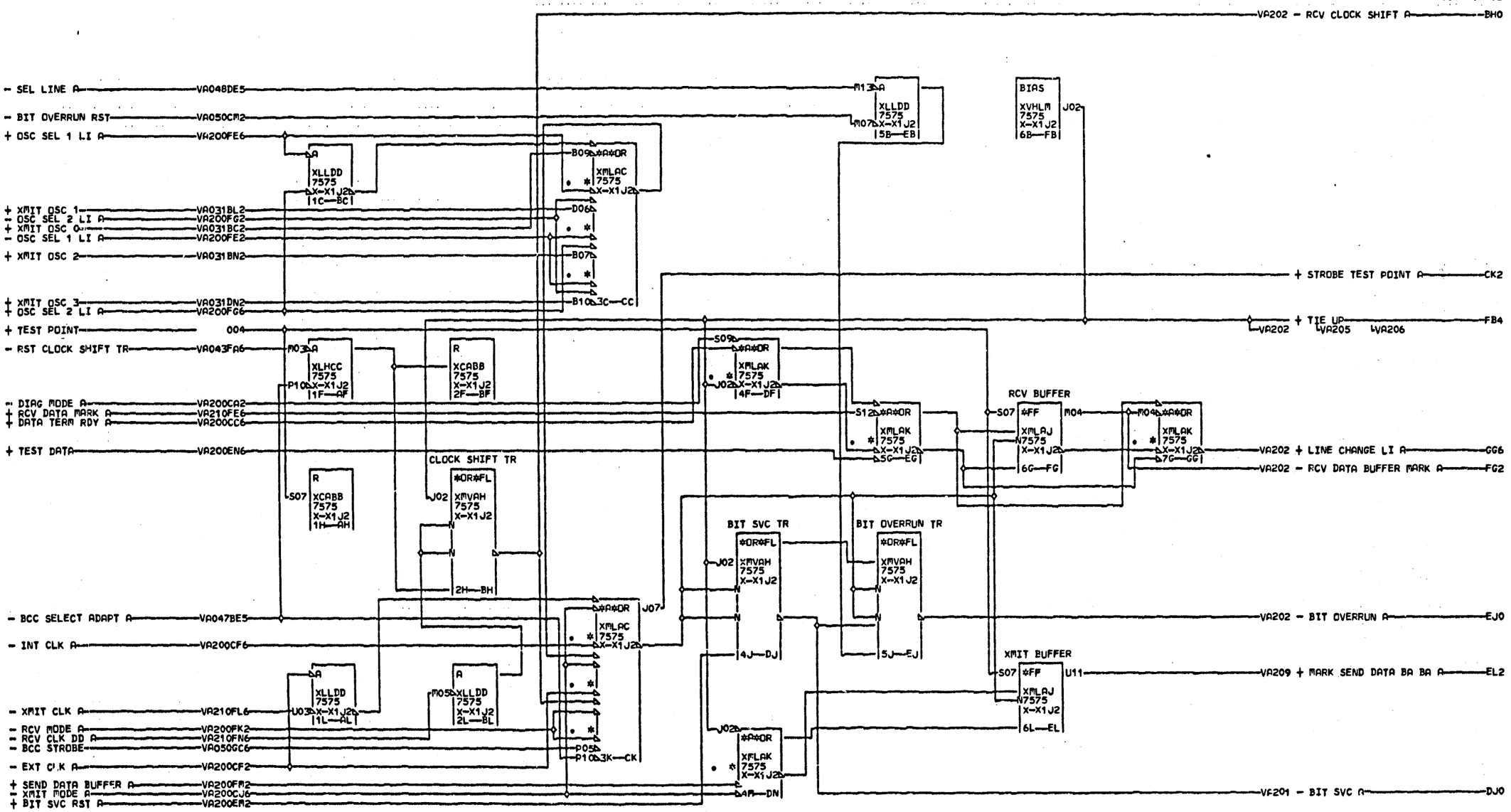

\# NOTE
\# FULL FEATURE WIRING SHOWN
V \# WITH EIA SYNC LINE SET
A \# AND LINE INTERFACE CARD
2 \# PN 8211452 INSTALLED
0 \# SEE VA000 FOR OTHER
3 \# LINE SETS

000

01-26-72 309520C
11-11-74 311286

EIA SYNC LINE INTERFACE CARD				VA203
DATE 11-22-74 MACH. 27RNB				
LOG	400	FRAME	01	000
		P.N.	1785482	
IBM CORP.	SDD BLK.		GH	

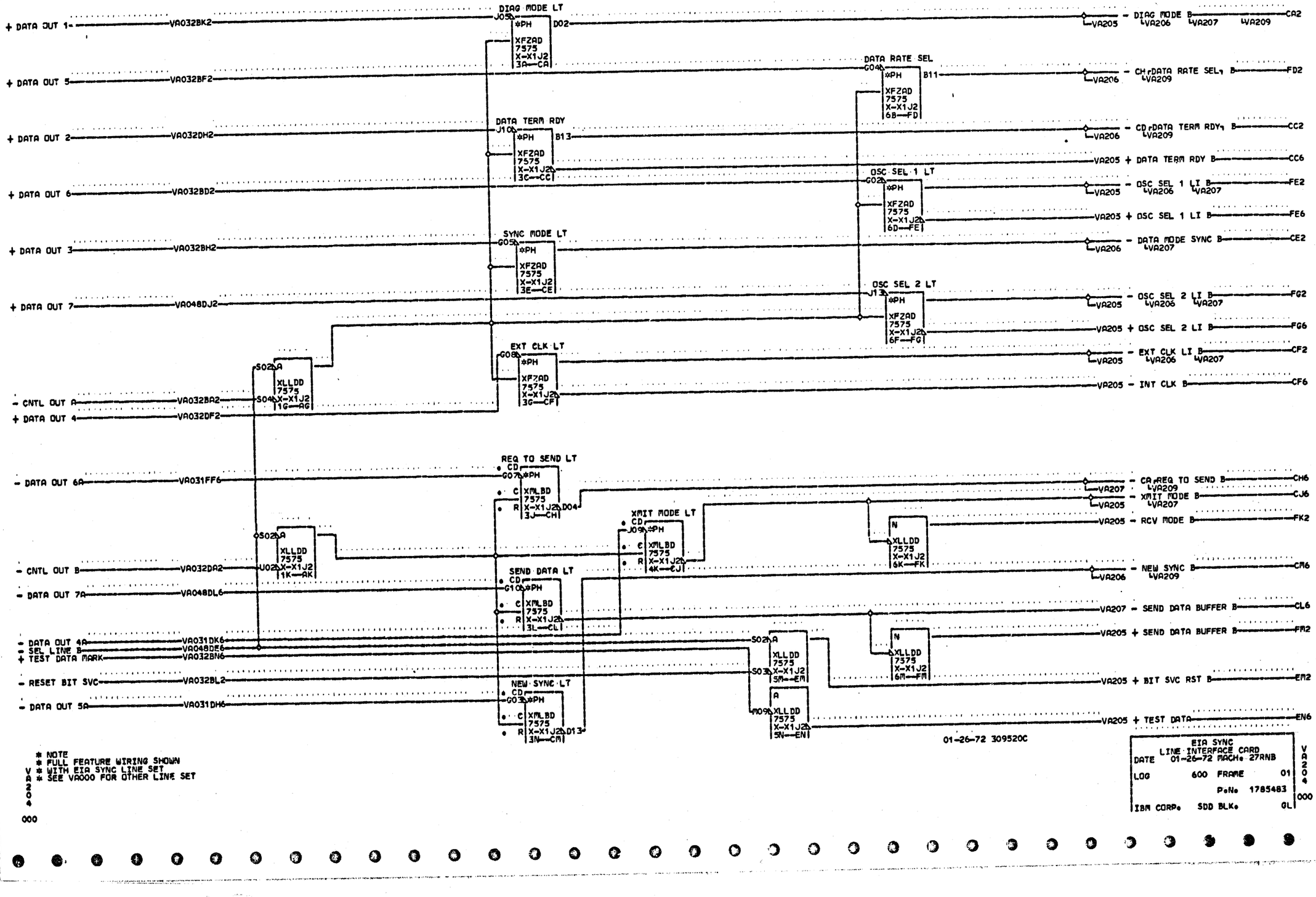
+ DATA OUT 1
VA032BK2
DIAG MODE LT
J05 *PH
XFZAD 7575 X-X1J2 3A—CA
D02
VA205 - DIAG MODE B CA2
VA206 VA207 VA209
+ DATA OUT 5
VA032BF2
DATA RATE SEL
G04 *PH
XFZAD 7575 X-X1J2 6B—FD
B11
VA206 - CH DATA RATE SEL B FD2
VA209
+ DATA OUT 2
VA032DH2
DATA TERM RDY
J10 *PH
XFZAD 7575 X-X1J2 3C—CC
B13
VA206 - CD DATA TERM RDY B CC2
VA209
VA205 + DATA TERM RDY B CC6
+ DATA OUT 6
VA032BD2
OSC SEL 1 LT
G02 *PH
XFZAD 7575 X-X1J2 6D—FE
VA205 - OSC SEL 1 LI B FE2
VA206 VA207
VA203 + OSC SEL 1 LI B FE6
+ DATA OUT 3
VA032BH2
SYNC MODE LT
G05 *PH
XFZAD 7575 X-X1J2 3E—CE
VA206 - DATA MODE SYNC B CE2
VA207
+ DATA OUT 7
VA048DJ2
OSC SEL 2 LT
J13 *PH
XFZAD 7575 X-X1J2 6F—FG
VA205 - OSC SEL 2 LI B FG2
VA206 VA207
VA205 + OSC SEL 2 LI B FG6
EXT CLK LT
G08 *PH
XFZAD 7575 X-X1J2 3G—CF
VA205 - EXT CLK LI B CF2
VA206 VA207
VA205 - INT CLK B CF6
S02 A
XLLDD 7575 X-X1J2 1G—AG
S04
- CNTL OUT A
VA032BA2
+ DATA OUT 4
VA032DF2
- DATA OUT 6A
VA031FF6
REQ TO SEND LT
CD
G07 *PH
C XMLBD 7575 X-X1J2 3J—CH
R
D04
VA207 - CA REQ TO SEND B CH6
VA209
VA205 - XMIT MODE B CJ6
VA207
XMIT MODE LT
CD
J09 *PH
C XMLBD 7575 X-X1J2 4K—CJ
R
VA205 - RCV MODE B FK2
N
XLLDD 7575 X-X1J2 6K—FK
S02 A
XLLDD 7575 X-X1J2 1K—AK
U02
- CNTL OUT B
VA032DA2
VA206 - NEW SYNC B CM6
VA209
SEND DATA LT
CD
G10 *PH
C XMLBD 7575 X-X1J2 3L—CL
R
- DATA OUT 7A
VA048DL6
VA207 - SEND DATA BUFFER B CL6
- DATA OUT 4A
VA031DK6
- SEL LINE B
VA048DE6
+ TEST DATA MARK
VA032BN6
S02 A
XLLDD 7575 X-X1J2 5M—EM
S03
N
XLLDD 7575 X-X1J2 6M—FM
VA205 + SEND DATA BUFFER B FM2
- RESET BIT SVC
VA032BL2
VA205 + BIT SVC RST B EM2
NEW SYNC LT
CD
G03 *PH
C XMLBD 7575 X-X1J2 3N—CM
R
D13
- DATA OUT 5A
VA031DH6
A
XLLDD 7575 X-X1J2 5N—EN
M09
VA205 + TEST DATA EN6
01-26-72 309520C
* NOTE
* FULL FEATURE WIRING SHOWN
* WITH EIA SYNC LINE SET
* SEE VA000 FOR OTHER LINE SET
VA204 000
EIA SYNC
LINE INTERFACE CARD
DATE 01-26-72 MACH. 27RNB
LOG 600 FRAME 01
P.N. 1785483
IBM CORP. SDD BLK. GL
VA204 000

000 VA205

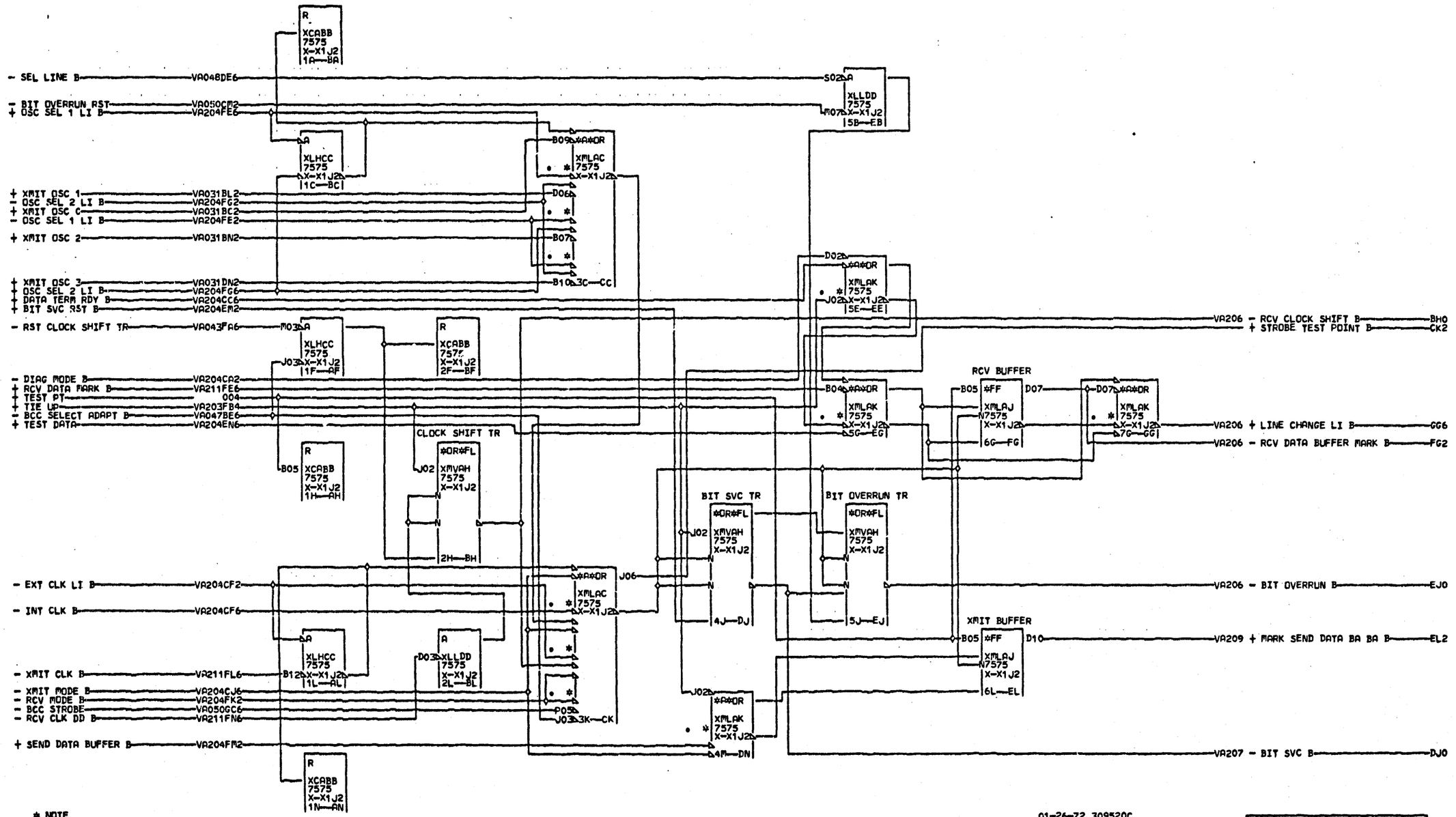

* NOTE
* FULL FEATURE WIRING SHOWN
V * WITH EIA SYNC LINE SET
A * AND LINE INTERFACE CARD
2 * PN 8211452 INSTALLED
0 * SEE VA000 FOR OTHER
5 * LINE SETS

000

01-26-72 309520C
11-11-74 311286

EIA SYNC
LINE INTERFACE CARD
DATE 11-22-74 MACH. 27RNB
LOG 400 FRAME 01
P.N. 1785484
IBM CORP. SDD BLK. GH

VA205 000

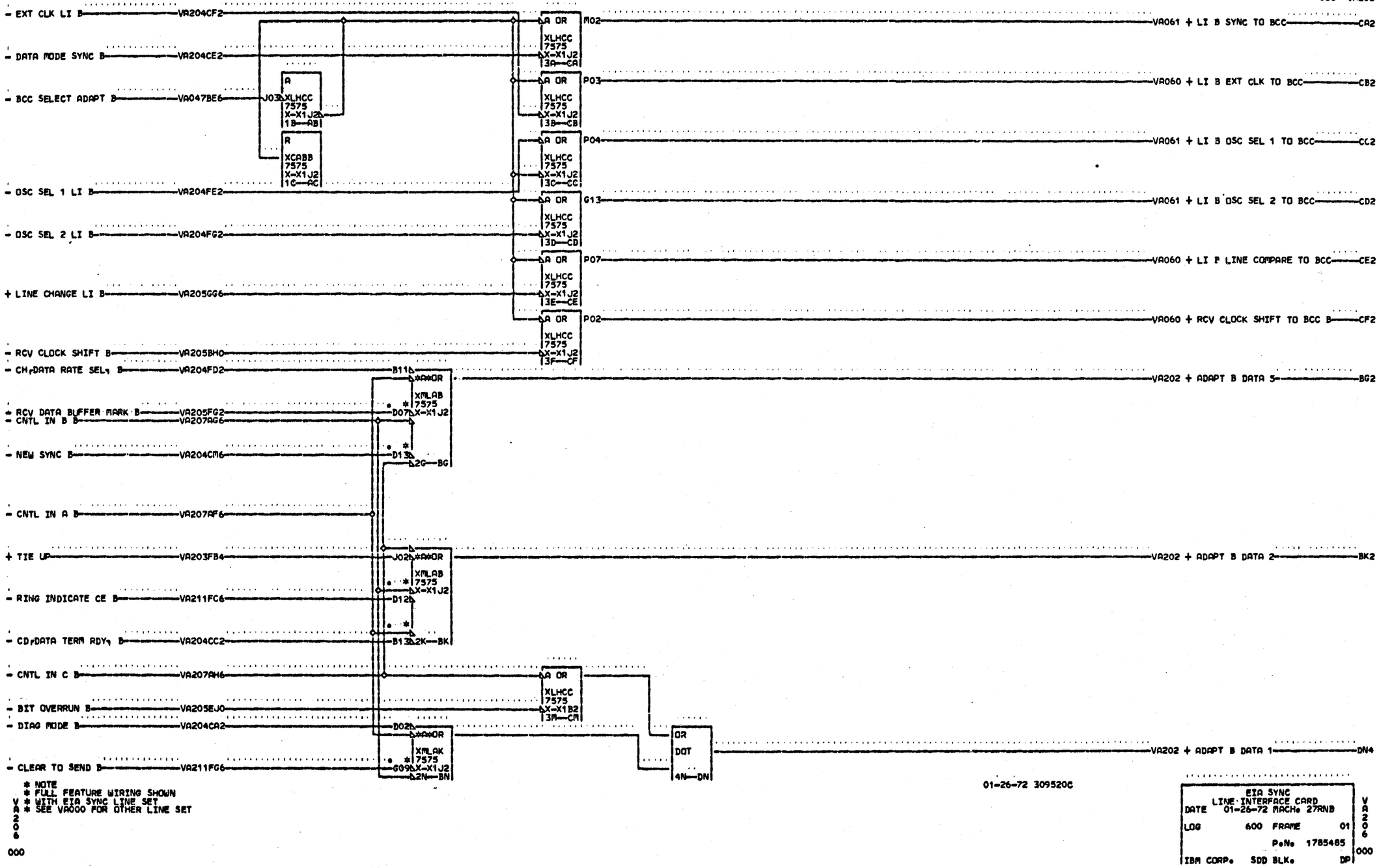

* NOTE
* FULL FEATURE WIRING SHOWN
* WITH EIA SYNC LINE SET
* SEE VA000 FOR OTHER LINE SET

VA206 000

01-26-72 309520C

EIA SYNC
LINE INTERFACE CARD
DATE 01-26-72 MACH= 27RNB
LOG 600 FRAME 01
P.N= 1785485
IBM CORP. SDD BLK= DP

VA206 000

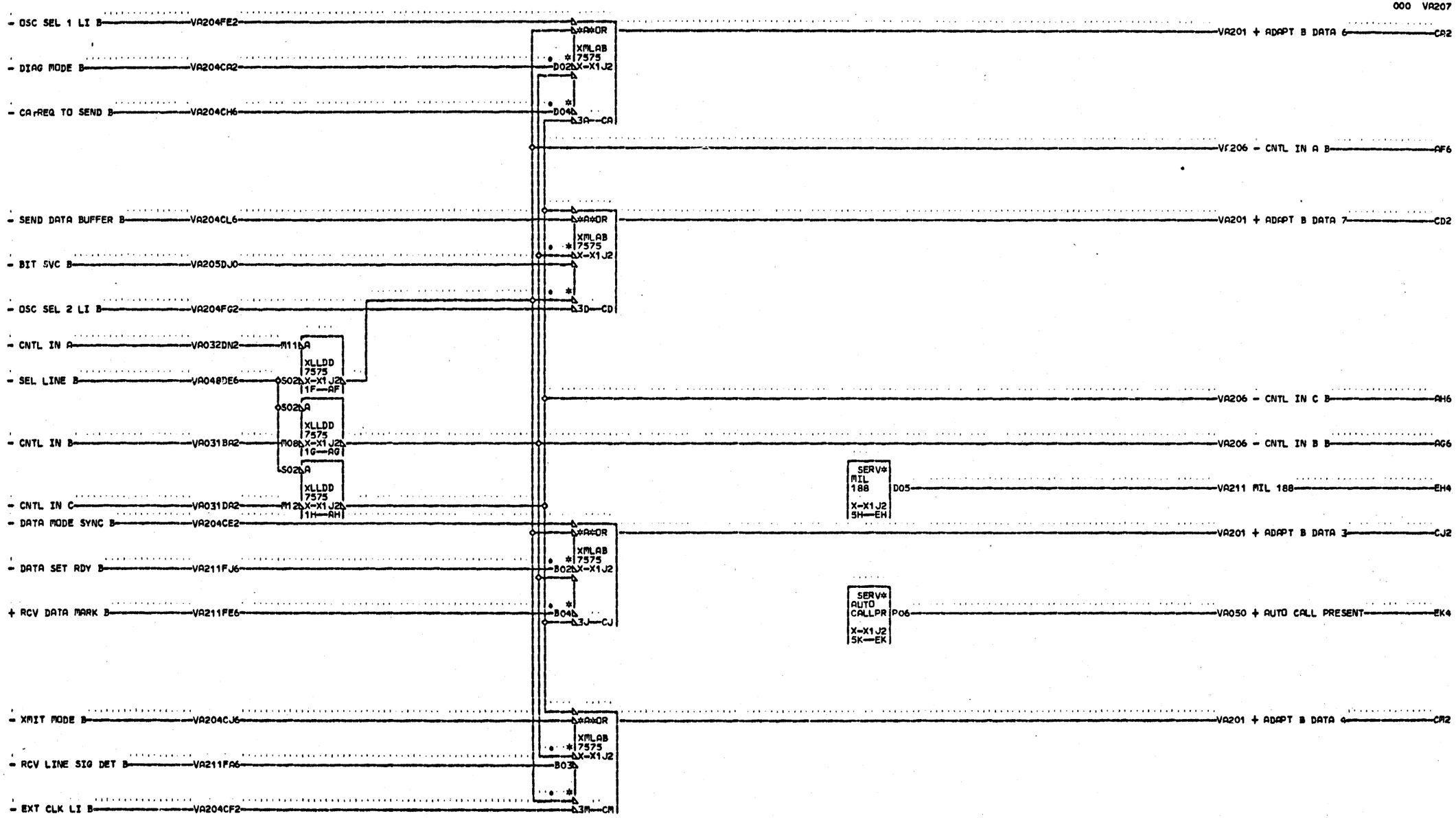

* NOTE
* FULL FEATURE WIRING SHOWN
* WITH EIA SYNC LINE SET
* SEE VA000 FOR OTHER LINE SET

VA207 000

01-26-72 309520C

EIA SYNC LINE INTERFACE CARD				VA207 000
DATE 01-26-72	MACH# 27RNB			
LOG	600	FRAME	01	
		P#N#	1785486	
IBM CORP#	SDD BLK#		EL	

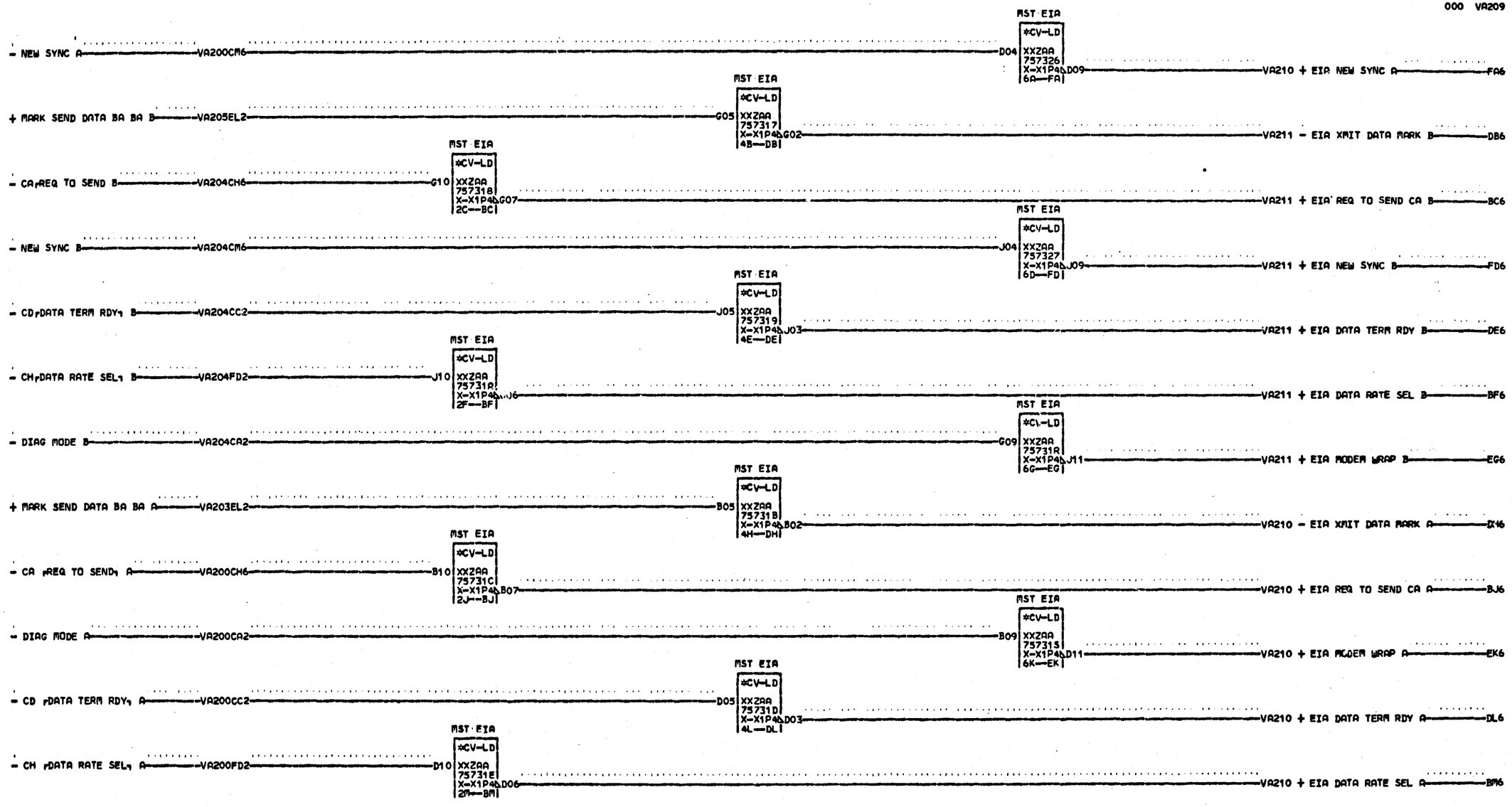

* NOTE
* FULL FEATURE WIRING SHOWN
* WITH EIA SYNC LINE SET
* SEE VA000 FOR OTHER LINE SET

VA209
000

01-26-72 309520C

EIA SYNC
DRIVER CARD
DATE 01-26-72 ADCH. 27RNB
LOG 600 FRAME 01
P.N. 1785487
IBM CORP. SDD BLK. FF

VA209 000

000 VA210

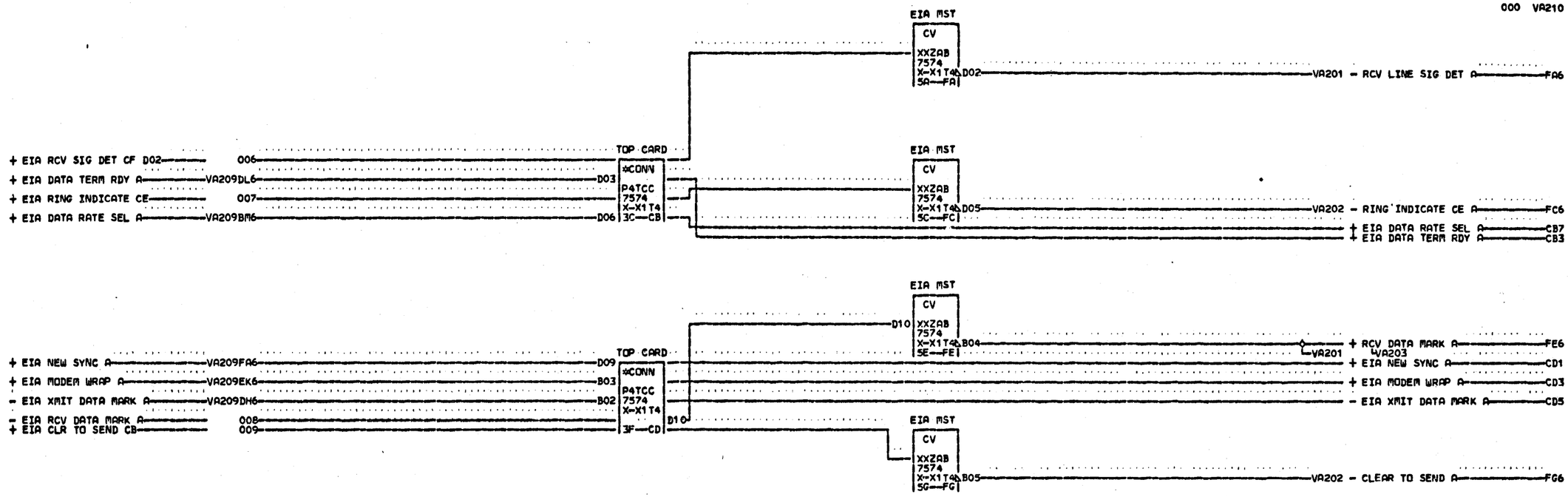

* NOTE
* FULL FEATURE WIRING SHOWN
* WITH EIA SYNC LINE SET
* SEE VA000 FOR OTHER LINE SET

01-26-72 309520C

EIA SYNC TERMINATOR CARD			
DATE	01-26-72 MACH0 27RNB		
LOG	600	FRAME	01
		P.N.	1785488
IBM CORP.	SDD BLK.		FP

VA210 000

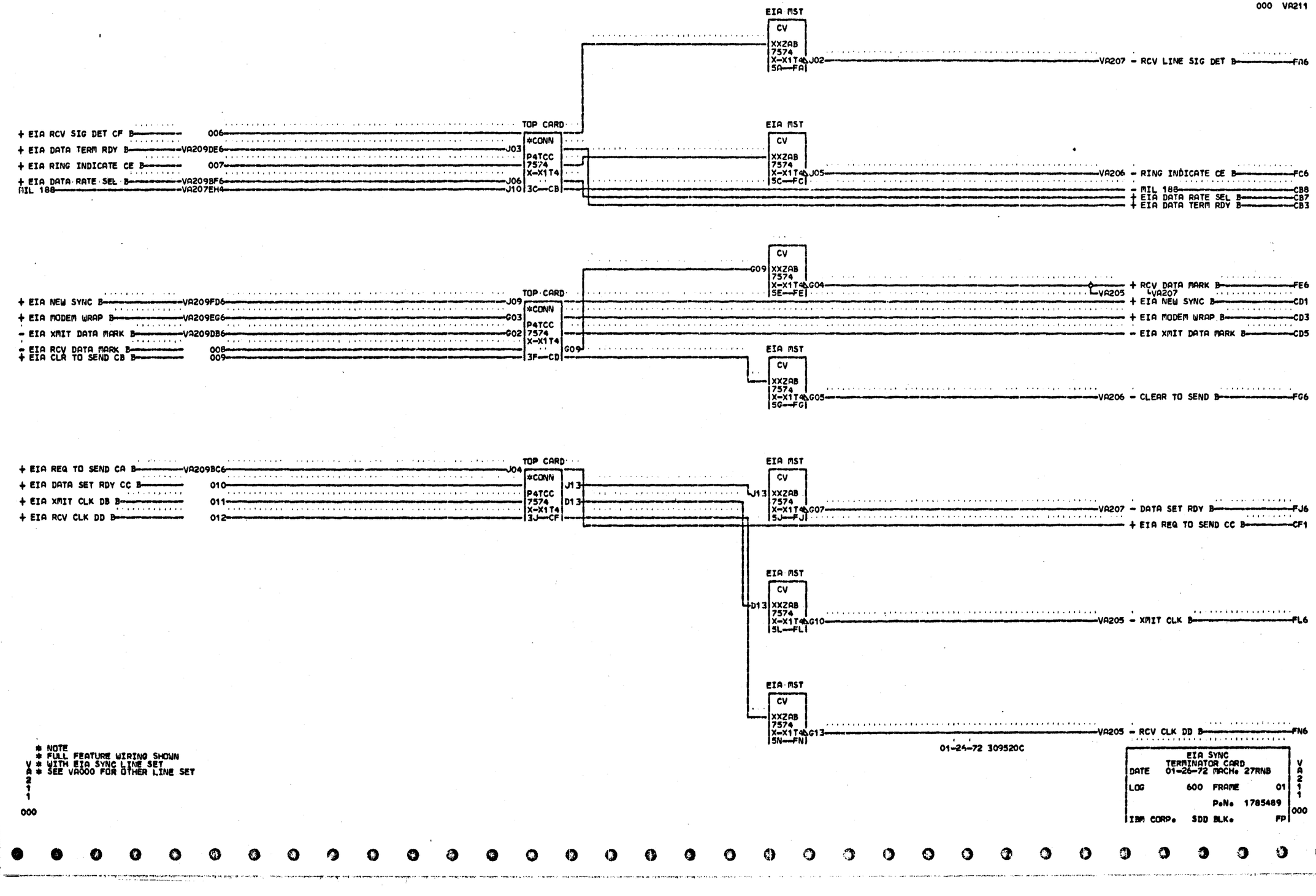

* NOTE
* FULL FEATURE WIRING SHOWN
* WITH EIA SYNC LINE SET
* SEE VA000 FOR OTHER LINE SET

V A 2 1 1 000

01-24-72 309520C

EIA SYNC
TERMINATOR CARD
DATE 01-26-72 MACH. 27RNB
LOG 600 FRAME 01
P.N. 1785489
IBM CORP. SDD BLK. FP

V A 2 1 1 000

000 VA220

+ DATA OUT 1 — VA032BK2 — J05 DIAG MODE LT *PH XFZAD 7575 X-X1K2 3A—CA — S09 — VA221 - DIAG MODE C — VA222 — VA223 — VA229 — CA2

+ DATA OUT 5 — VA032BF2 — G04 DATA RATE SEL *PH XFZAD 7575 X-X1K2 6B—FD — P09 — VA222 - CH DATA RATE SEL C — VA229 — FD2

+ DATA OUT 2 — VA032DH2 — J10 DATA TERM RDY *PH XFZAD 7575 X-X1K2 3C—CC — P12 — VA222 - CD DATA TERM RDY C — VA229 — CC2

VA223 + DATA TERM RDY C — CC6

+ DATA OUT 6 — VA032BD2 — G02 OSC SEL 1 LT *PH XFZAD 7575 X-X1K2 6D—FE

VA221 - OSC SEL 1 LI C — VA222 — VA223 — FE2

VA223 + OSC SEL LI C — FE6

+ DATA OUT 3 — VA032BH2 — G05 SYNC MODE LT *PH XFZAD 7575 X-X1K2 3E—CE

VA221 - DATA MODE SYNC C — VA222 — CE2

+ DATA OUT 7 — VA048DJ2 — J13 OSC SEL 2 LT *PH XFZAD 7575 X-X1K2 6F—FG

VA221 - OSC SEL 2 LI C — VA222 — VA223 — FG2

VA223 + OSC SEL 2 LI C — FG6

M13 A XLLDD 7575 X-X1K2 1G—AG

G08 EXT CLK LT *PH XFZAD 7575 X-X1K2 3G—CF

VA221 - EXT CLK C — VA222 — VA223 — CF2

- CNTL OUT A — VA032BA2 — S04

+ DATA OUT 4 — VA032DF2

VA223 - INT CLK C — CF6

- DATA OUT 6A — VA031FF6 — G07 REQ TO SEND C *PH XMLBD 7575 X-X1K2 3J—CH — U07

VA221 - CA REQ TO SEND C — VA229 — CH6

VA221 - XMIT MODE C — VA223 — CJ6

M13 A XLLDD 7575 X-X1K2 1K—AK

J09 XMIT MODE LT *PH XMLBD 7575 X-X1K2 4K—CJ

N XLLDD 7575 X-X1K2 6K—FK

VA223 - RCV MODE C — FK2

- CNTL OUT B — VA032DA2 — U02

G10 SEND DATA LT *PH XMLBD 7575 X-X1K2 3L—CL

VA222 - NEW SYNC C — VA229 — CM6

- DATA OUT 7A — VA048DL6

VA221 - SEND DATA BUFFER C — CL6

- DATA OUT 4A — VA031DK6

- SEL LINE C — VA048DE7

+ TEST DATA MARK — VA032BN6

M13 A XLLDD 7575 X-X1K2 5M—EM

N XLLDD 7575 X-X1K2 6M—FM

VA223 + SEND DATA BUFFER C — FM2

- RESET BIT SVC — VA032BL2 — S03

VA223 + BIT SVC RST C — EM2

- DATA OUT 5A — VA031DH6 — G03 NEW SYNC LT *PH XMLBD 7575 X-X1K2 3N—CM — P11

M09 A XLLDD 7575 X-X1K2 5N—EN

VA223 + TEST DATA — EN6

01-26-72 309520C

* NOTE
* FULL FEATURE WIRING SHOWN
* WITH EIA SYNC LINE SET
* SEE VA000 FOR OTHER LINE SET

VA220 000

EIA SYNC
LINE INTERFACE CARD
DATE 01-26-72 MACH= 27RNB
LOG 600 FRAME 01
P=N= 1785490
IBM CORP= SDD BLK= GL

VA220 000

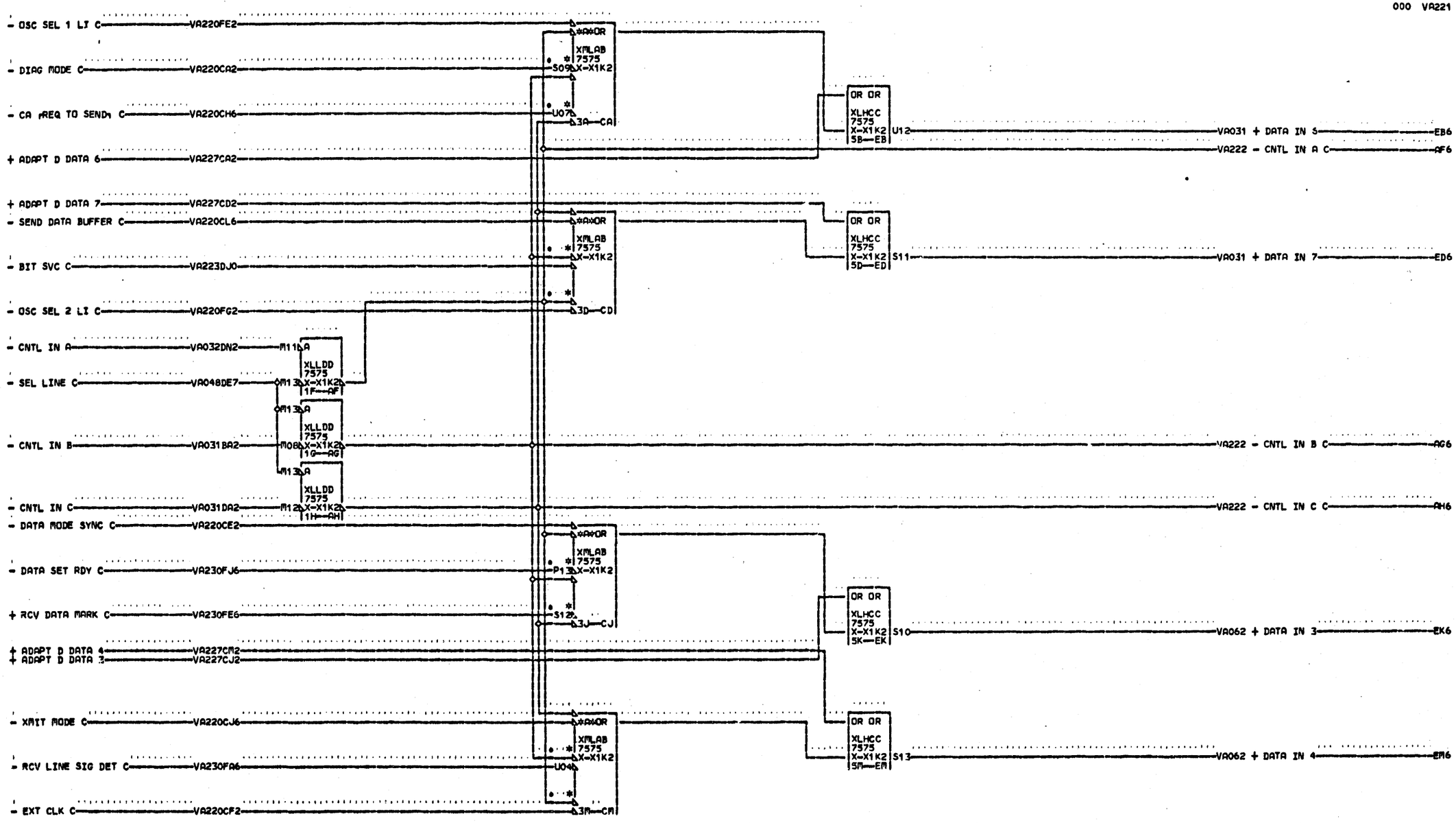

* NOTE
* FULL FEATURE WIRING SHOWN
* WITH EIA SYNC LINE SET
* SEE VA000 FOR OTHER LINE SET

VA221

000

01-26-72 309520C

EIA SYNC
LINE INTERFACE CARD
DATE 01-26-72 MACHe 27RNB
LOG 600 FRAME 01
PeNo 1785491
IBM CORPe SDD BLKe EN

VA221 000

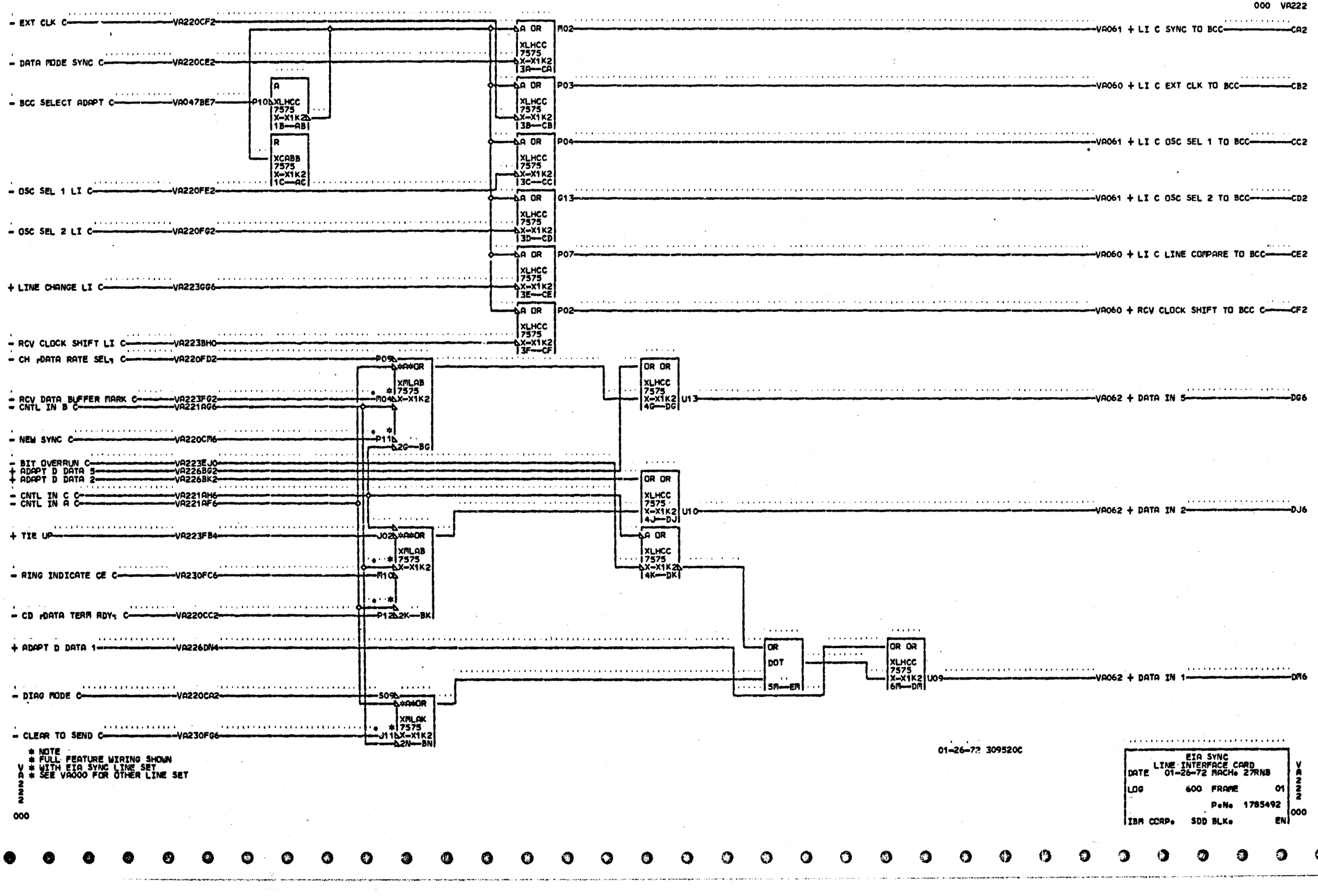
- EXT CLK C
VA220CF2
- DATA MODE SYNC C
VA220CE2
- BCC SELECT ADAPT C
VA047BE7
P10
A XLHCC 7575 X-X1K2 1B—AB
R XCABB 7575 X-X1K2 1C—AC
- OSC SEL 1 LI C
VA220FE2
- OSC SEL 2 LI C
VA220FG2
+ LINE CHANGE LI C
VA223GG6
- RCV CLOCK SHIFT LI C
VA223BH0
- CH rDATA RATE SEL; C
VA220FD2
- RCV DATA BUFFER MARK C
VA223FG2
- CNTL IN B C
VA221AG6
- NEW SYNC C
VA220CM6
- BIT OVERRUN C
VA223EJ0
+ ADAPT D DATA 5
VA226BG2
+ ADAPT D DATA 2
VA226BK2
- CNTL IN C C
VA221AH6
- CNTL IN A C
VA221AF6
+ TIE UP
VA223FB4
- RING INDICATE CE C
VA230FC6
- CD rDATA TERM RDY; C
VA220CC2
+ ADAPT D DATA 1
VA226DN4
- DIAG MODE C
VA220CA2
- CLEAR TO SEND C
VA230FG6
A OR XLHCC 7575 X-X1K2 3A—CA
A OR XLHCC 7575 X-X1K2 3B—CB
A OR XLHCC 7575 X-X1K2 3C—CC
A OR XLHCC 7575 X-X1K2 3D—CD
A OR XLHCC 7575 X-X1K2 3E—CE
A OR XLHCC 7575 X-X1K2 3F—CF
M02
VA061 + LI C SYNC TO BCC
CA2
P03
VA060 + LI C EXT CLK TO BCC
CB2
P04
VA061 + LI C OSC SEL 1 TO BCC
CC2
G13
VA061 + LI C OSC SEL 2 TO BCC
CD2
P07
VA060 + LI C LINE COMPARE TO BCC
CE2
P02
VA060 + RCV CLOCK SHIFT TO BCC C
CF2
P09 *A*OR XMLAB 7575 X-X1K2
M04
P11 2G—BG
J02 *A*OR XMLAB 7575 X-X1K2
M10
P12 2K—BK
S09 *A*OR XMLAK 7575 X-X1K2
J11 2N—BN
OR OR XLHCC 7575 X-X1K2 4G—DG U13
VA062 + DATA IN 5
DG6
OR OR XLHCC 7575 X-X1K2 4J—DJ U10
VA062 + DATA IN 2
DJ6
A OR XLHCC 7575 X-X1K2 4K—DK
OR DOT 5M—EM
OR OR XLHCC 7575 X-X1K2 6M—DM U09
VA062 + DATA IN 1
DM6
* NOTE
* FULL FEATURE WIRING SHOWN
* WITH EIA SYNC LINE SET
* SEE VA000 FOR OTHER LINE SET
V A 2 2 2
000
01-26-72 309520C
EIA SYNC
LINE INTERFACE CARD
DATE 01-26-72 MACH= 27RNB
LOG 600 FRAME 01
P=N= 1785492
IBM CORP= SDD BLK= EN
V A 2 2 2
000

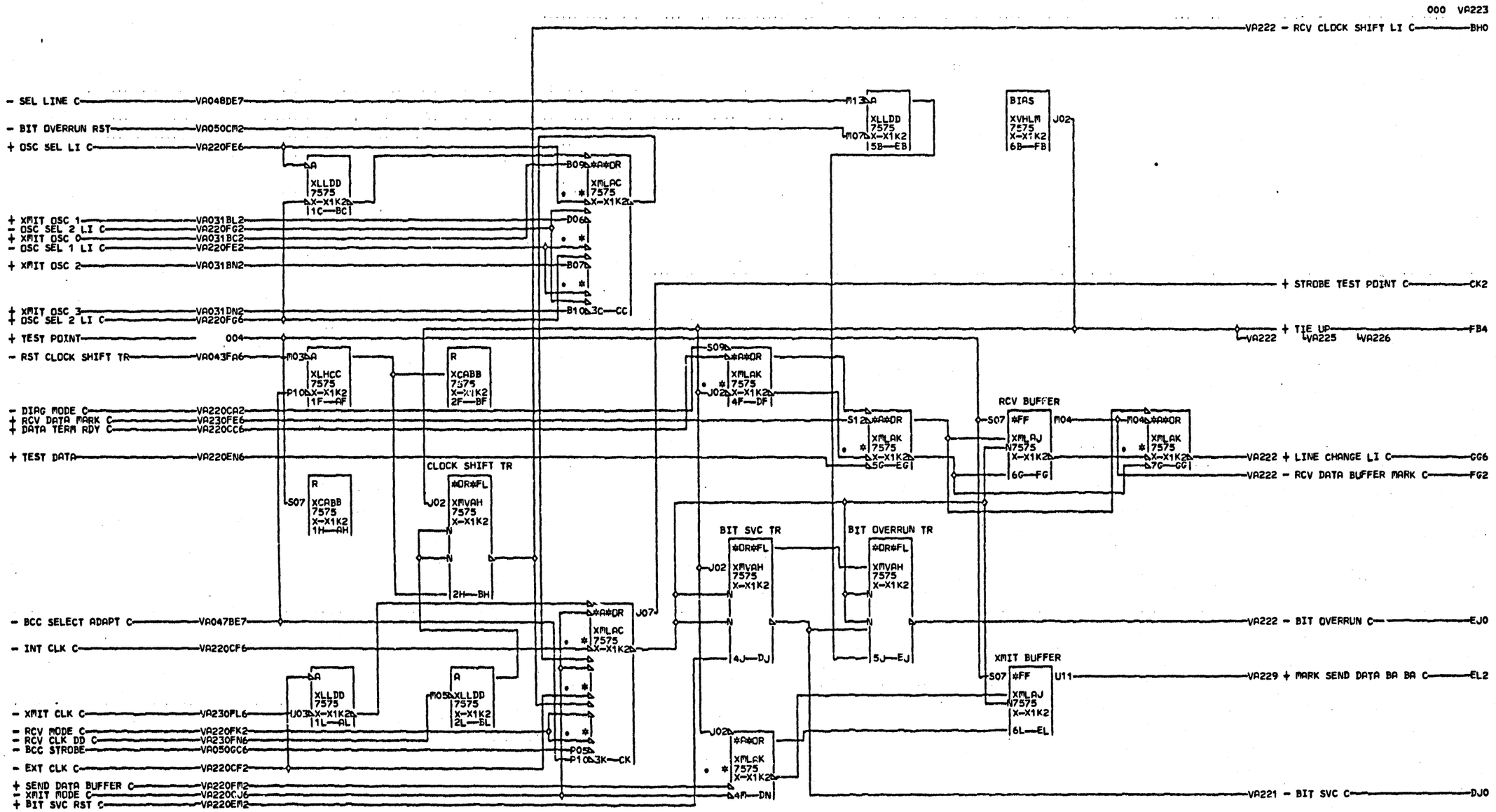

* NOTE
* FULL FEATURE WIRING SHOWN
V * WITH EIA SYNC LINE SET
A * AND LINE INTERFACE CARD
2 * PN 8211452 INSTALLED
2 * SEE VA000 FOR OTHER
3 * LINE SETS

000

01-26-72 309520C
11-11-74 311286

EIA SYNC LINE INTERFACE CARD			VA223
DATE 11-22-74 MACH. 27RNB			
LOG 400	FRAME 01		
	P.N. 1785493		000
IBM CORP. SDD BLK.		GH	

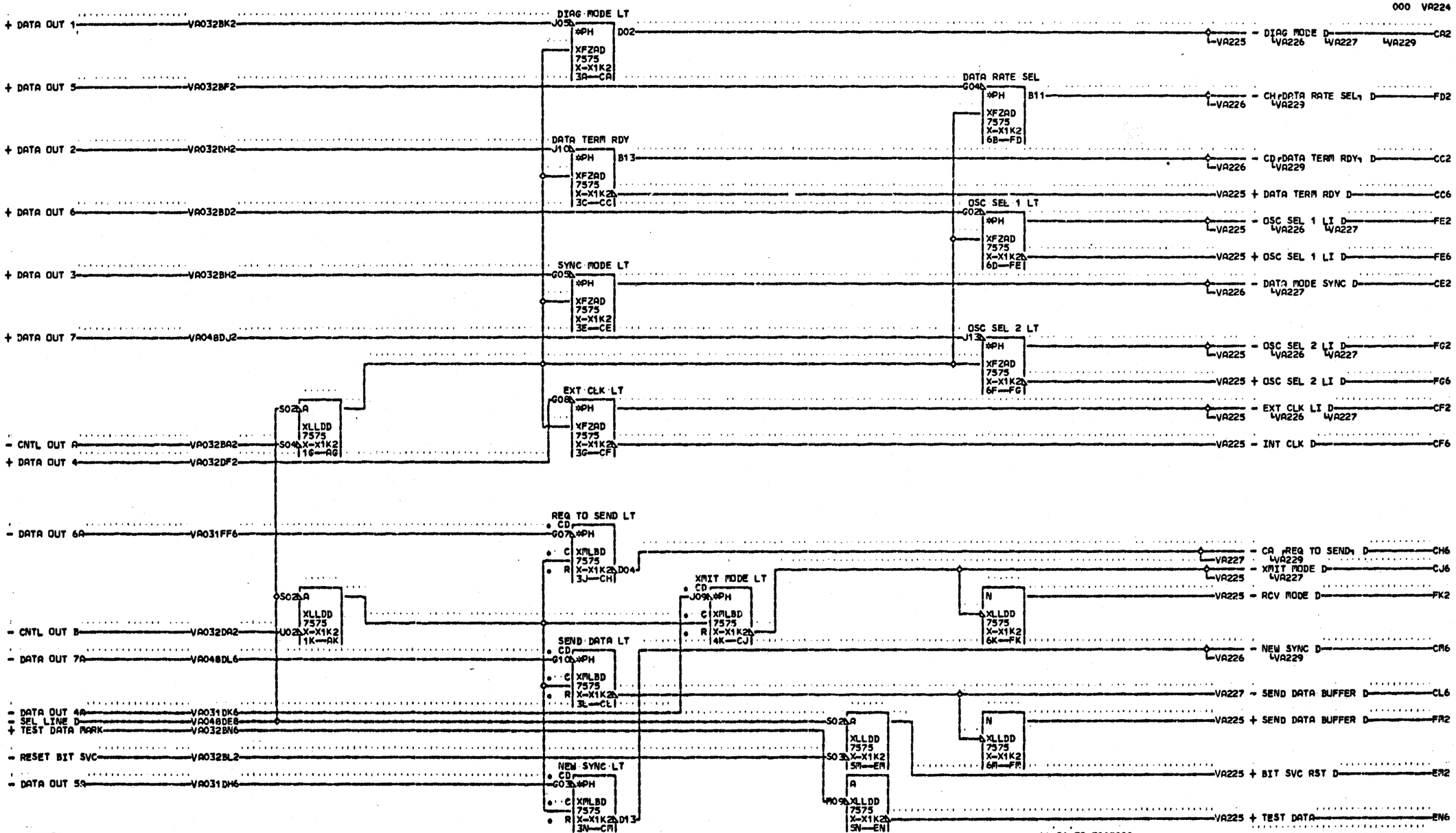

* NOTE
* FULL FEATURE WIRING SHOWN
* WITH EIA SYNC LINE SET
* SEE VA000 FOR OTHER LINE SET

01-26-72 309520C

EIA SYNC LINE INTERFACE CARD
DATE 01-26-72 MACH. 27RNB
LOG 600 FRAME 01
P.N. 1785494
IBM CORP. SDD BLK. GL

VA224 000

000

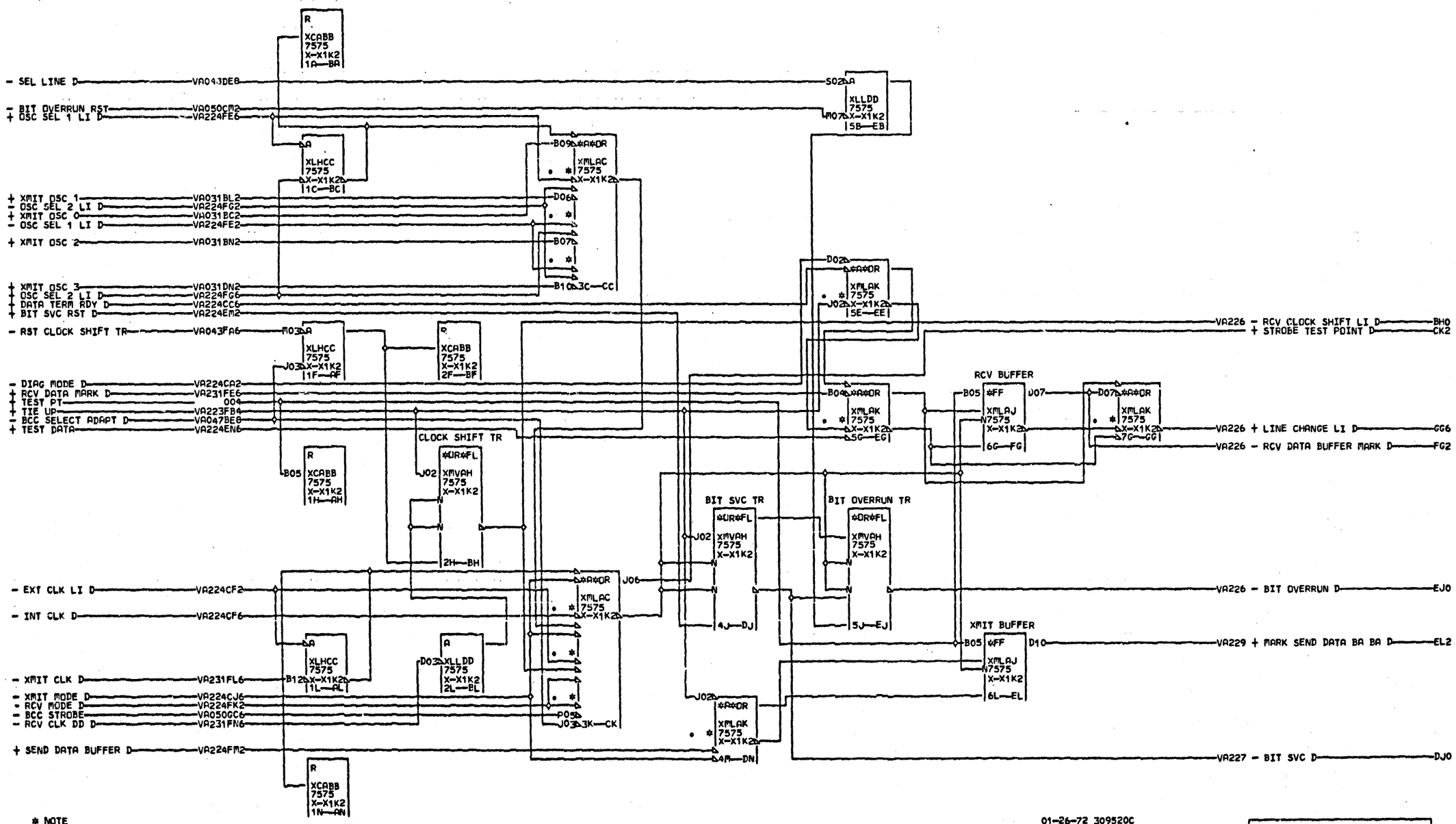

* NOTE
* FULL FEATURE WIRING SHOWN
V * WITH EIA SYNC LINE SET
A * AND LINE INTERFACE CARD
2 * PN 8211452 INSTALLED
2 * SEE VA000 FOR OTHER
5 * LINE SETS

000

01-26-72 309520C
11-11-74 311286

EIA SYNC LINE INTERFACE CARD				
DATE 11-22-74 MACH. 27RNB				V A 2 2 5
LOG	400	FRAME	01	
		P.N. 1785495		
IBM CORP.	SDD BLK.		GH	000

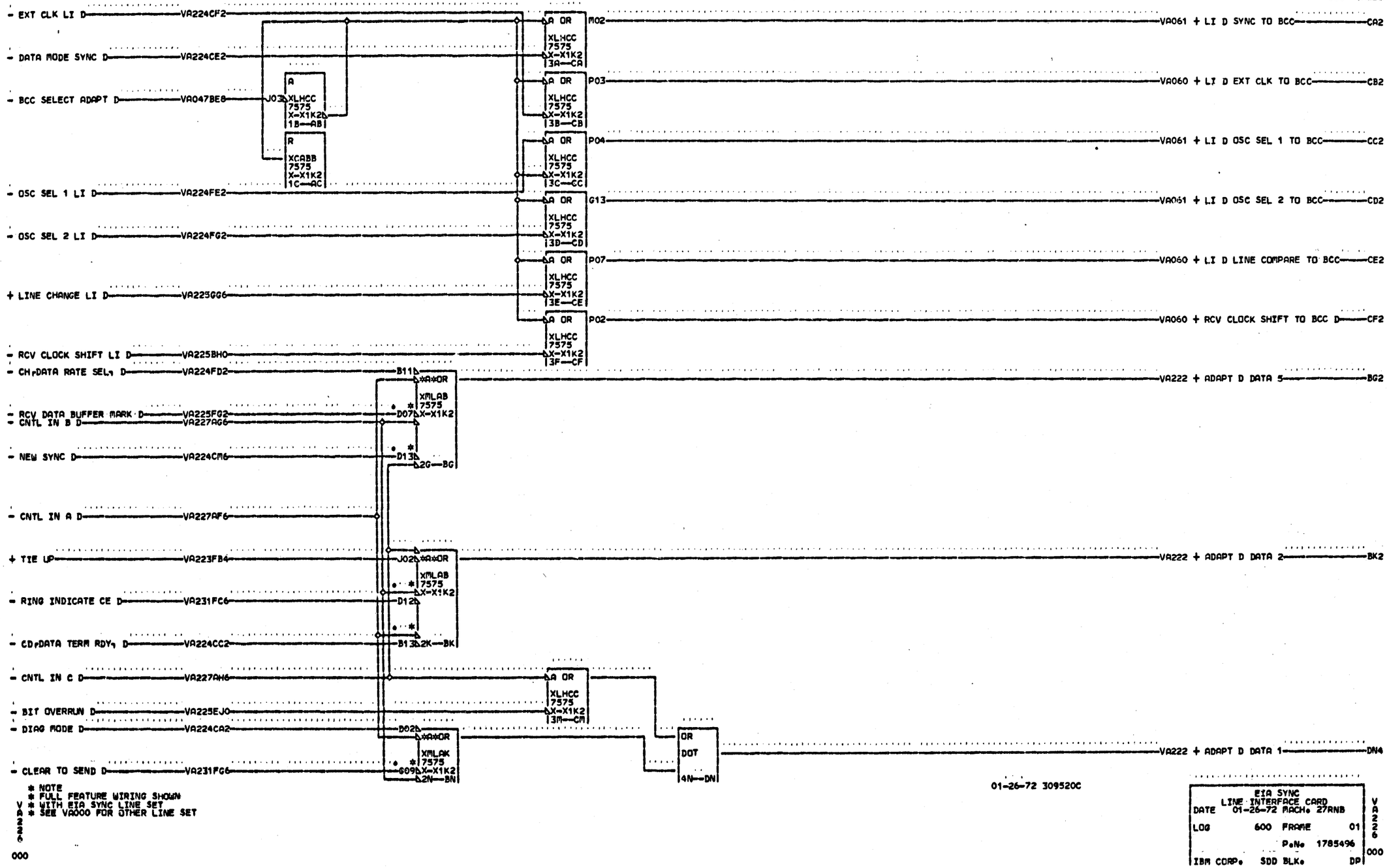

* NOTE
* FULL FEATURE WIRING SHOWN
* WITH EIA SYNC LINE SET
* SEE VA000 FOR OTHER LINE SET

VA226 000

01-26-72 309520C

EIA SYNC
LINE INTERFACE CARD
DATE 01-26-72 MACH. 27RNB
LOG 600 FRAME 01
P.N. 1785496
IBM CORP. SDD BLK. DP

VA226 000

000 VA227

- OSC SEL \ LI D — VA224FE2 — **OR — VA221 + ADAPT D DATA 6 — CA2
- DIAG MODE D — VA224CA2 — XMLAB 7575 X-X1K2 — D02
- CA \REQ TO SEND\ D — VA224CH6 — D04 — 3A — CA
- VA226 - CNTL IN A D — AF6
- SEND DATA BUFFER D — VA224CL6 — **OR — VA221 + ADAPT D DATA 7 — CD2
- BIT SVC D — VA225DJ0 — XMLAB 7575 X-X1K2
- OSC SEL 2 LI D — VA224FG2 — 3D — CD
- CNTL IN A — VA032DN2 — M11 A
- SEL LINE D — VA048DE8 — S02 — XLLDD 7575 X-X1K2 1F — AF
- S02 A
- VA226 - CNTL IN C D — AH6
- CNTL IN B — VA031BA2 — M08 — XLLDD 7575 X-X1K2 1G — AG
- VA226 - CNTL IN B D — AG6
- S02 A
- SERV* MIL 188 — D05 — VA231 MIL 188 — EH4
- CNTL IN C — VA031DA2 — M12 — XLLDD 7575 X-X1K2 1H — AH
- DATA MODE SYNC D — VA224CE2 — **OR — VA221 + ADAPT D DATA 3 — CJ2
- DATA SET RDY D — VA231FJ6 — XMLAB 7575 X-X1K2 — B02
- SERV* AUTO CALLPR — P06 — VA050 + AUTO CALL PRESENT — EK4
- + RCV DATA MARK D — VA231FE6 — B04 — 3J — CJ
- XMIT MODE D — VA224CJ6 — **OR — VA221 + ADAPT D DATA 4 — CR2
- RCV LINE SIG DET D — VA231FA6 — XMLAB 7575 X-X1K2 — B03
- EXT CLK LI D — VA224CF2 — 3M — CA

* NOTE
* FULL FEATURE WIRING SHOWN
* WITH EIA SYNC LINE SET
* SEE VA000 FOR OTHER LINE SET

VA227
000

01-26-72 309520C

EIA SYNC
LINE INTERFACE CARD
DATE 01-26-72 MACH. 27RNB
LOG 600 FRAME 01
P.N. 1785497
IBM CORP. SDD BLK. EL

VA227 000

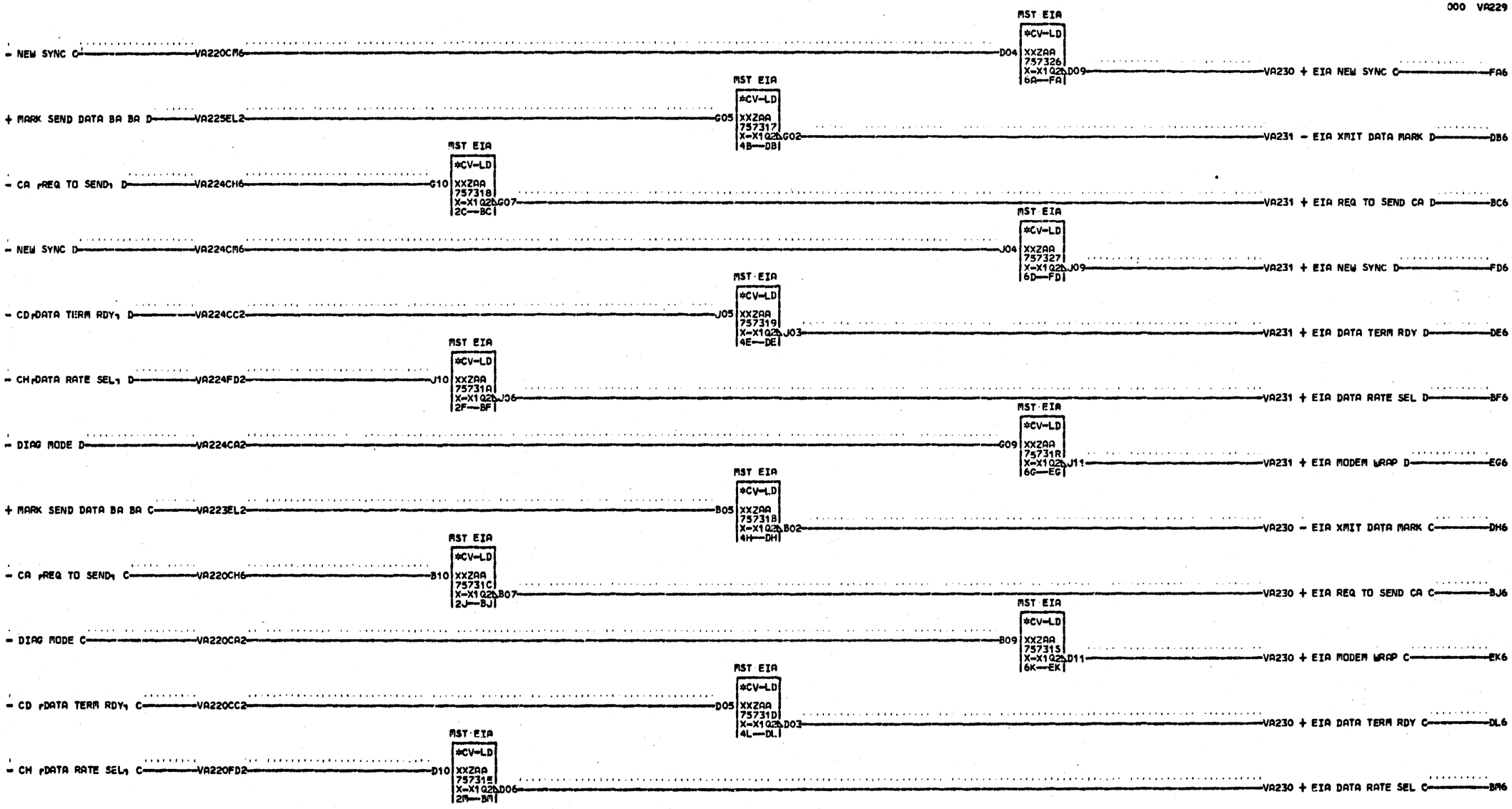

* NOTE
* FULL FEATURE WIRING SHOWN
* WITH EIA SYNC LINE SET
* SEE VA000 FOR OTHER LINE SET

VA229 000

01-26-72 309520C

EIA SYNC DRIVER CARD				VA229 000
DATE	01-26-72	PACH# 27RNB		
LOG	600	FRAME	01	
		P#N#	1785498	
IBM CORP#	SDD	BLK#	FF	

000 VA230

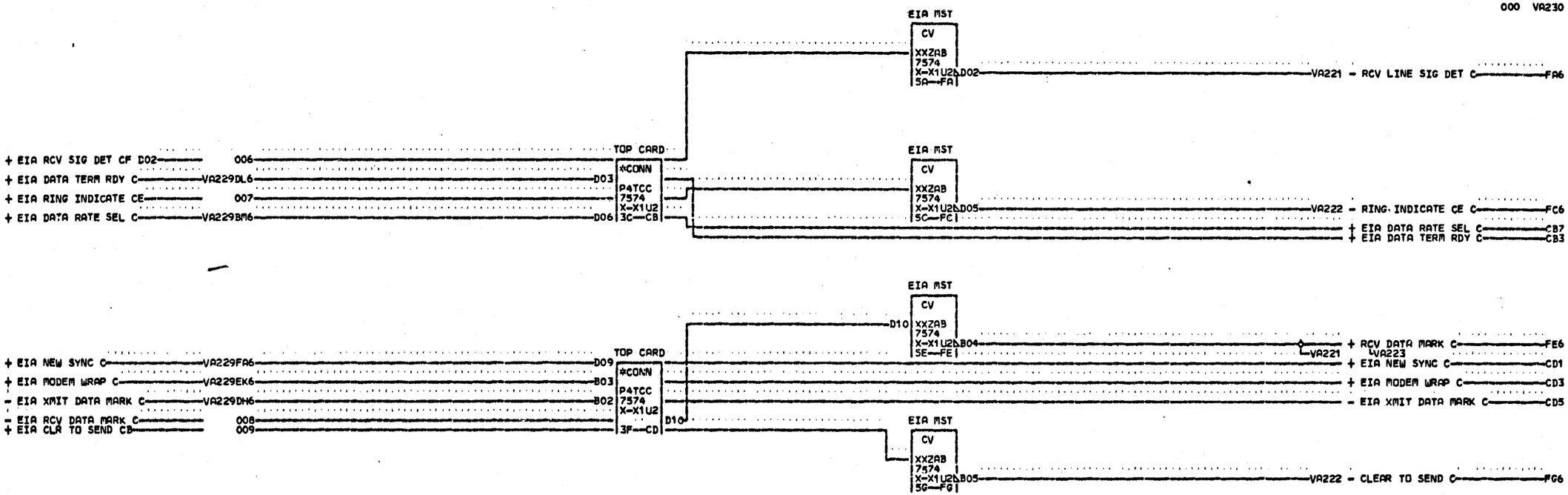

* NOTE
* FULL FEATURE WIRING SHOWN
* WITH EIA SYNC LINE SET
* SEE VA000 FOR OTHER LINE SET

VA230
000

01-26-72 309520C

EIA SYNC
TERMINATOR CARD
DATE 01-26-72 MACH. 27RNB
LOG 600 FRAME 01
P.N. 1785499
IBM CORP. SDD BLK. FP

VA230
000

000 VA231

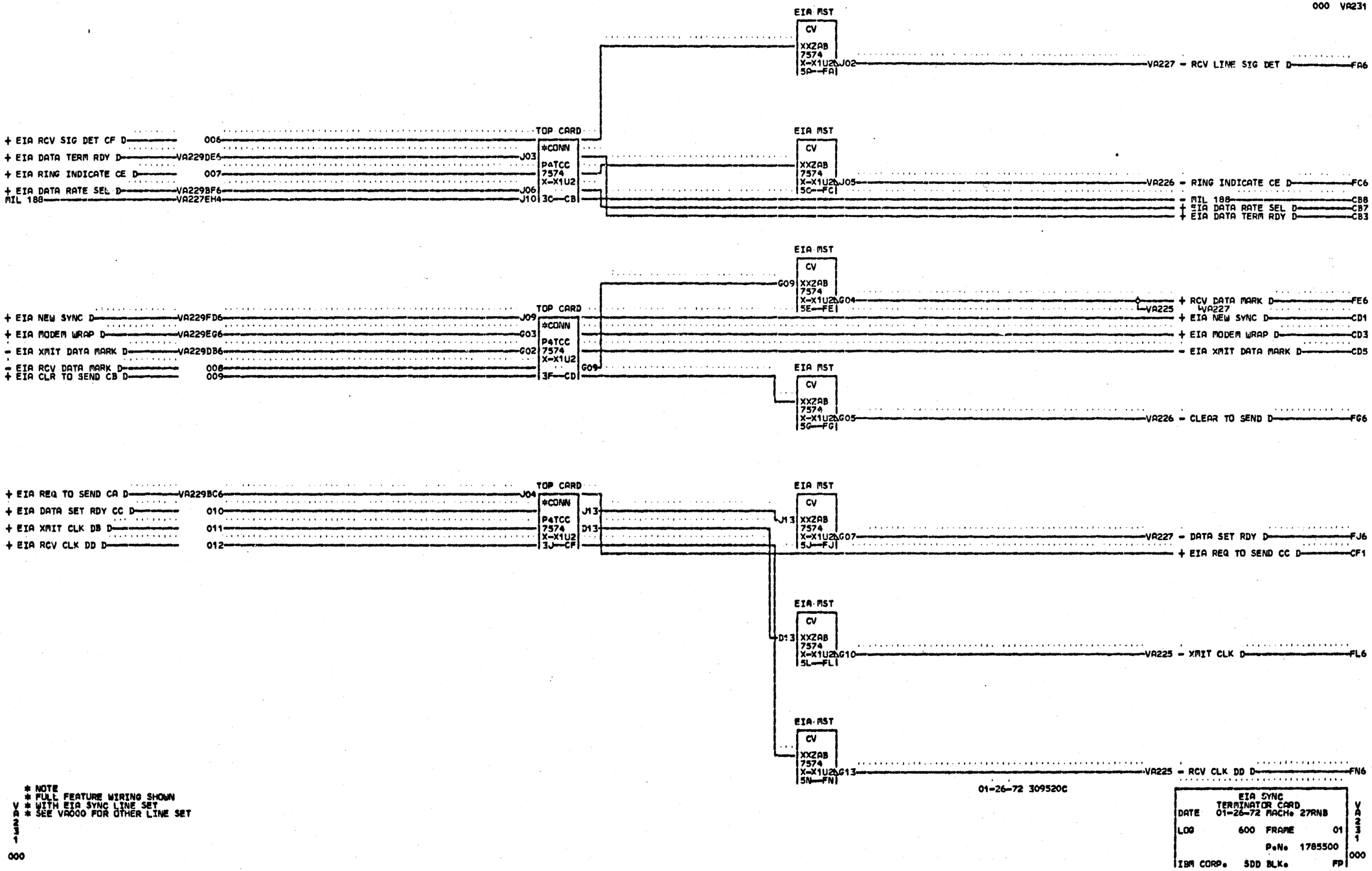

* NOTE
* FULL FEATURE WIRING SHOWN
* WITH EIA SYNC LINE SET
* SEE VA000 FOR OTHER LINE SET

01-26-72 309520C

EIA SYNC TERMINATOR CARD			
DATE	01-26-72 MACH= 27RNB		
LOG	600	FRAME	01
		P.No.	1785500
IBM CORP.	SDD BLK.		FP

VA231 000

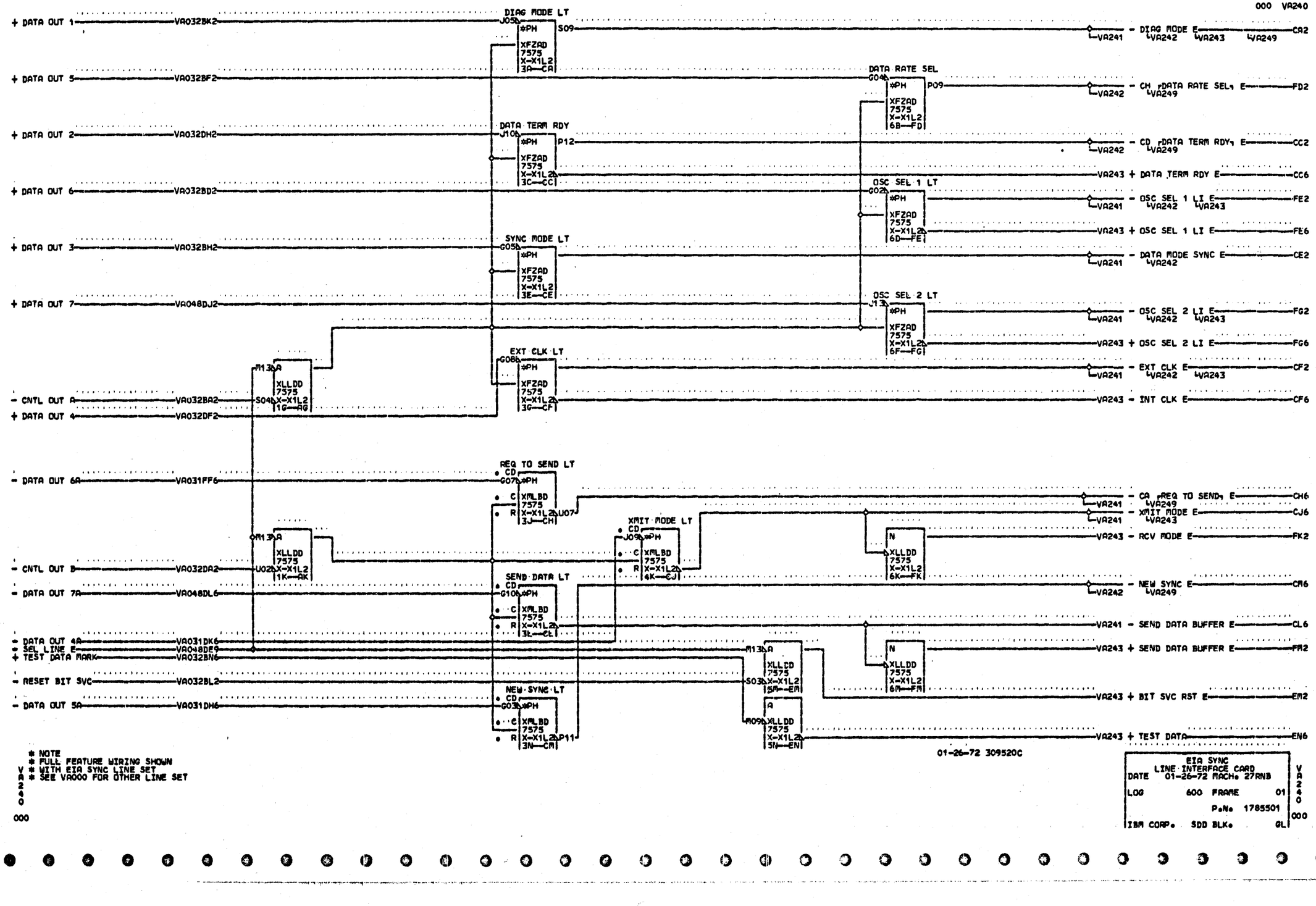

* NOTE
* FULL FEATURE WIRING SHOWN
* WITH EIA SYNC LINE SET
* SEE VA000 FOR OTHER LINE SET

01-26-72 309520C

EIA SYNC
LINE INTERFACE CARD
DATE 01-26-72 MACH. 27RNB
LOG 600 FRAME 01
P.No. 1785501
IBM CORP. SDD BLK. GL

VA240
000

000 VA241

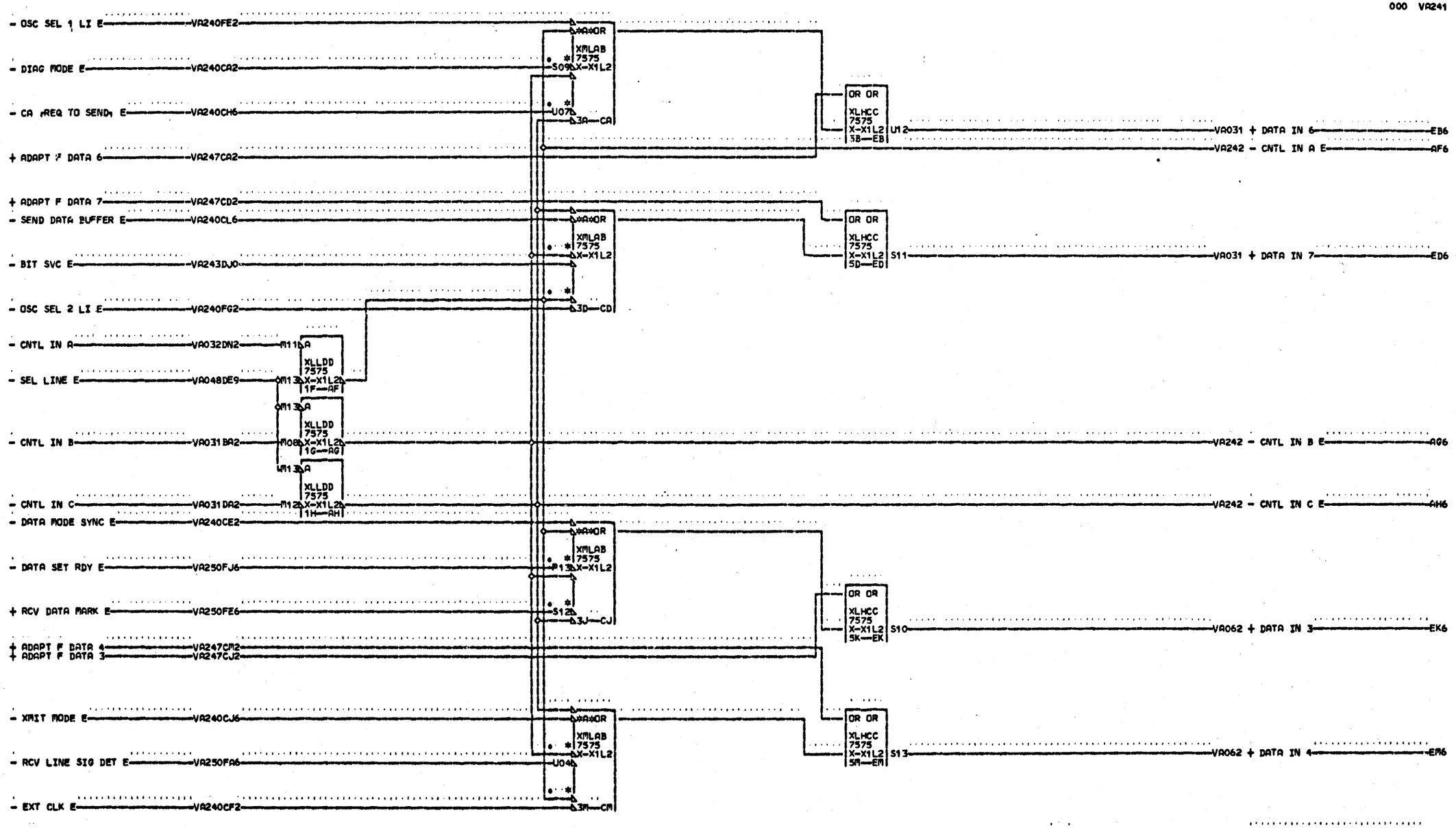

* NOTE
* FULL FEATURE WIRING SHOWN
* WITH EIA SYNC LINE SET
* SEE VA000 FOR OTHER LINE SET

VA241
000

01-26-72 309520C

EIA SYNC
LINE INTERFACE CARD
DATE 01-26-72 MACH. 27RNB
LOG 600 FRAME 01
P.N. 1785502
IBM CORP. SDD BLK. EN

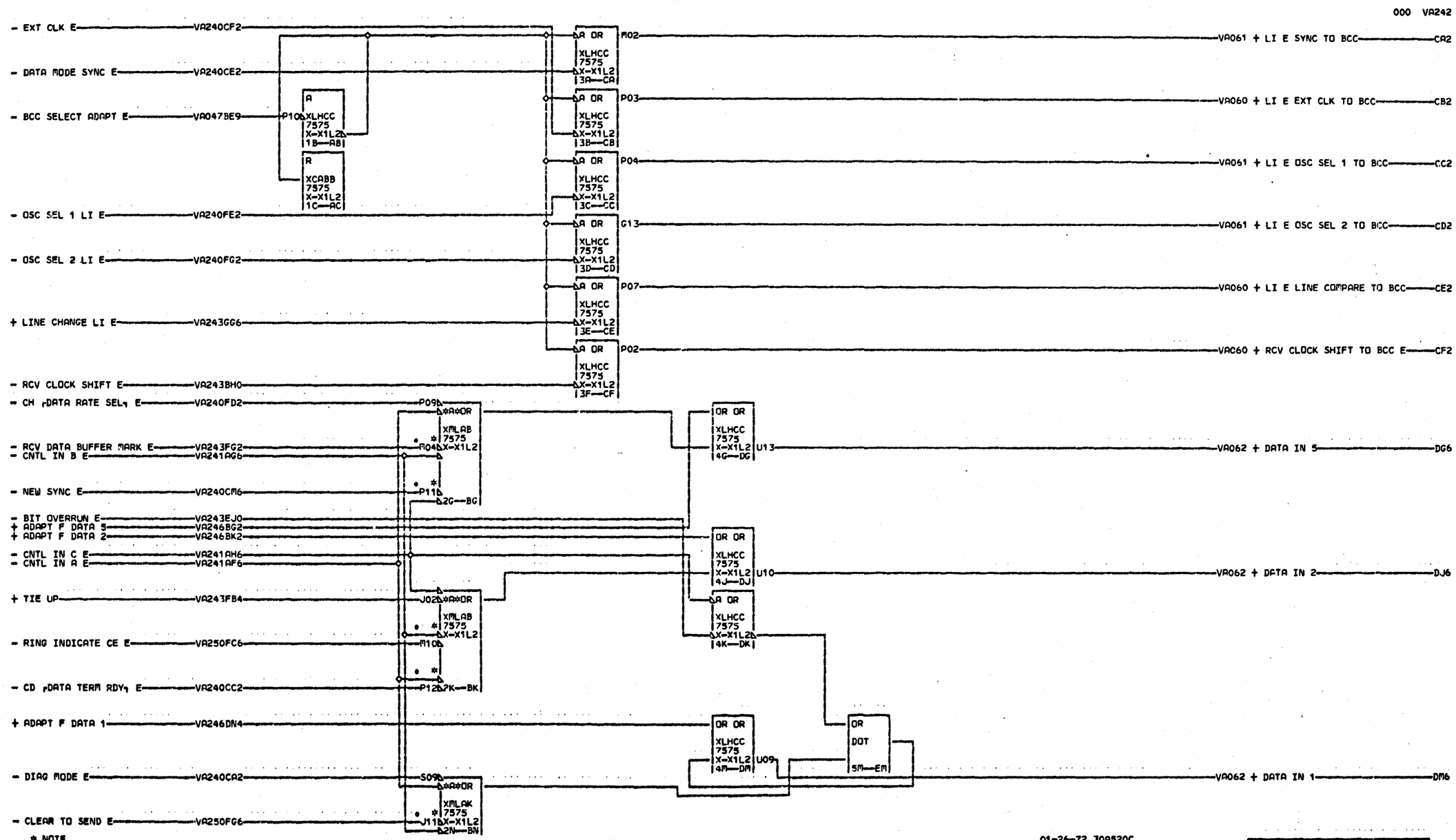
000 VA242
- EXT CLK E
VA240CF2
- DATA MODE SYNC E
VA240CE2
- BCC SELECT ADAPT E
VA047BE9
- OSC SEL 1 LI E
VA240FE2
- OSC SEL 2 LI E
VA240FG2
+ LINE CHANGE LI E
VA243GG6
- RCV CLOCK SHIFT E
VA243BH0
- CH (DATA RATE SEL) E
VA240FD2
- RCV DATA BUFFER MARK E
VA243FG2
- CNTL IN B E
VA241AG6
- NEW SYNC E
VA240CM6
- BIT OVERRUN E
VA243EJ0
+ ADAPT F DATA 5
VA246BG2
+ ADAPT F DATA 2
VA246BK2
- CNTL IN C E
VA241AH6
- CNTL IN A E
VA241AF6
+ TIE UP
VA243FB4
- RING INDICATE CE E
VA250FC6
- CD (DATA TERM RDY) E
VA240CC2
+ ADAPT F DATA 1
VA246DN4
- DIAG MODE E
VA240CA2
- CLEAR TO SEND E
VA250FG6
VA061 + LI E SYNC TO BCC
CA2
VA060 + LI E EXT CLK TO BCC
CB2
VA061 + LI E OSC SEL 1 TO BCC
CC2
VA061 + LI E OSC SEL 2 TO BCC
CD2
VA060 + LI E LINE COMPARE TO BCC
CE2
VA060 + RCV CLOCK SHIFT TO BCC E
CF2
VA062 + DATA IN 5
DG6
VA062 + DATA IN 2
DJ6
VA062 + DATA IN 1
DM6
* NOTE
* FULL FEATURE WIRING SHOWN
* WITH EIA SYNC LINE SET
* SEE VA000 FOR OTHER LINE SET
VA242
000
01-26-72 309520C
03-10-72 309540
EIA SYNC
LINE INTERFACE CARD
DATE 04-06-72 MACH. 27RNB
LOG 255 FRAME 01
P.N. 1785503
IBM CORP. SDD BLK. EN
VA242
000

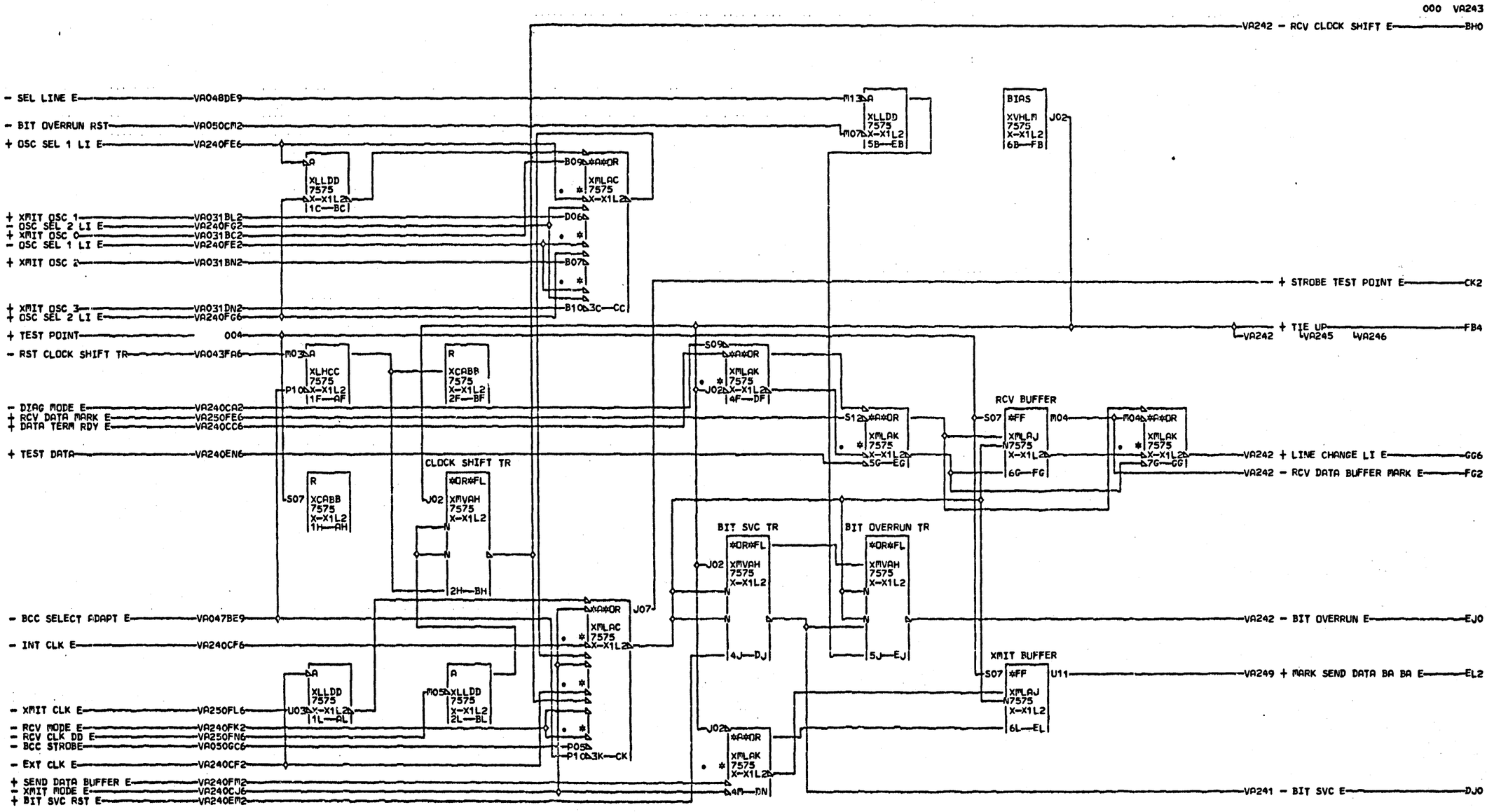

* NOTE
* FULL FEATURE WIRING SHOWN
V * WITH EIA SYNC LINE SET
A * AND LINE INTERFACE CARD
2 * PN 8211452 INSTALLED
4 * SEE VA000 FOR OTHER
3 * LINE SETS

000

01-26-72 309520C
11-11-74 311286

EIA SYNC
LINE INTERFACE CARD
DATE 11-22-74 MACH. 27RNB
LOG 400 FRAME 01
P.N. 1785504
IBM CORP. SDD BLK. GH

VA243 000

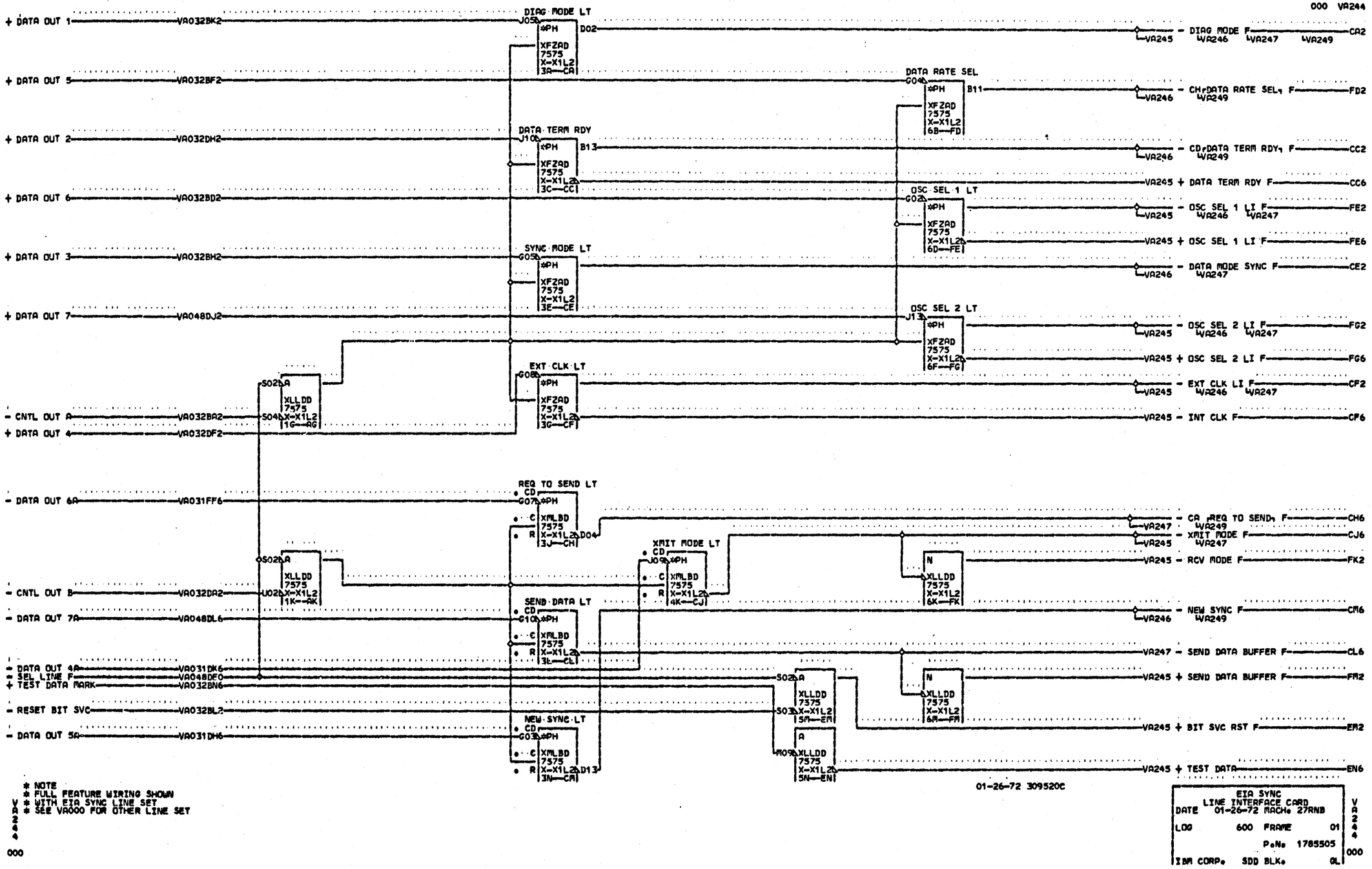
000 VA244
+ DATA OUT 1
VA032BK2
DIAG MODE LT
J05
*PH
XFZAD
7575
X-X1L2
3A—CA
D02
VA245 - DIAG MODE F CA2
VA246 VA247 VA249
+ DATA OUT 5
VA032BF2
DATA RATE SEL
G04
*PH
XFZAD
7575
X-X1L2
6B—FD
B11
VA246 - CH, DATA RATE SEL, F FD2
VA249
+ DATA OUT 2
VA032DH2
DATA TERM RDY
J10
*PH
XFZAD
7575
X-X1L2
3C—CC
B13
VA246 - CD, DATA TERM RDY, F CC2
VA249
VA245 + DATA TERM RDY F CC6
+ DATA OUT 6
VA032BD2
OSC SEL 1 LT
G02
*PH
XFZAD
7575
X-X1L2
6D—FE
VA245 - OSC SEL 1 LI F FE2
VA246 VA247
VA245 + OSC SEL 1 LI F FE6
+ DATA OUT 3
VA032BH2
SYNC MODE LT
G05
*PH
XFZAD
7575
X-X1L2
3E—CE
VA246 - DATA MODE SYNC F CE2
VA247
+ DATA OUT 7
VA048DJ2
OSC SEL 2 LT
J13
*PH
XFZAD
7575
X-X1L2
6F—FG
VA245 - OSC SEL 2 LI F FG2
VA246 VA247
VA245 + OSC SEL 2 LI F FG6
EXT CLK LT
G08
*PH
XFZAD
7575
X-X1L2
3G—CF
VA245 - EXT CLK LI F CF2
VA246 VA247
VA245 - INT CLK F CF6
S02 A
XLLDD
7575
X-X1L2
1G—AG
- CNTL OUT A
VA032BA2
S04
+ DATA OUT 4
VA032DF2
- DATA OUT 6A
VA031FF6
REQ TO SEND LT
G07
CD
C
R
XMLBD
7575
X-X1L2
3J—CH
D04
VA247 - CA, REQ TO SEND, F CH6
VA249
VA245 - XMIT MODE F CJ6
VA247
XMIT MODE LT
J09
*PH
XMLBD
7575
X-X1L2
4K—CJ
N
XLLDD
7575
X-X1L2
6K—FK
VA245 - RCV MODE F FK2
S02 A
XLLDD
7575
X-X1L2
1K—AK
U02
- CNTL OUT B
VA032DA2
- DATA OUT 7A
VA048DL6
SEND DATA LT
G10
*PH
XMLBD
7575
X-X1L2
3L—CL
VA246 - NEW SYNC F CM6
VA249
VA247 - SEND DATA BUFFER F CL6
- DATA OUT 4A
VA031DK6
- SEL LINE F
VA048DE0
+ TEST DATA MARK
VA032BN6
S02 A
XLLDD
7575
X-X1L2
5A—EM
S03
N
XLLDD
7575
X-X1L2
6A—FM
VA245 + SEND DATA BUFFER F FM2
- RESET BIT SVC
VA032BL2
VA245 + BIT SVC RST F EM2
- DATA OUT 5A
VA031DH6
NEW SYNC LT
G03
*PH
XMLBD
7575
X-X1L2
3N—CM
D13
M09
A
XLLDD
7575
X-X1L2
5N—EN
VA245 + TEST DATA EN6
* NOTE
* FULL FEATURE WIRING SHOWN
* WITH EIA SYNC LINE SET
* SEE VA000 FOR OTHER LINE SET
01-26-72 309520C
EIA SYNC
LINE INTERFACE CARD
DATE 01-26-72 MACH. 27RNB
LOG 600 FRAME 01
P.N. 1785505
IBM CORP. SDD BLK. GL
V A 2 4 4 000

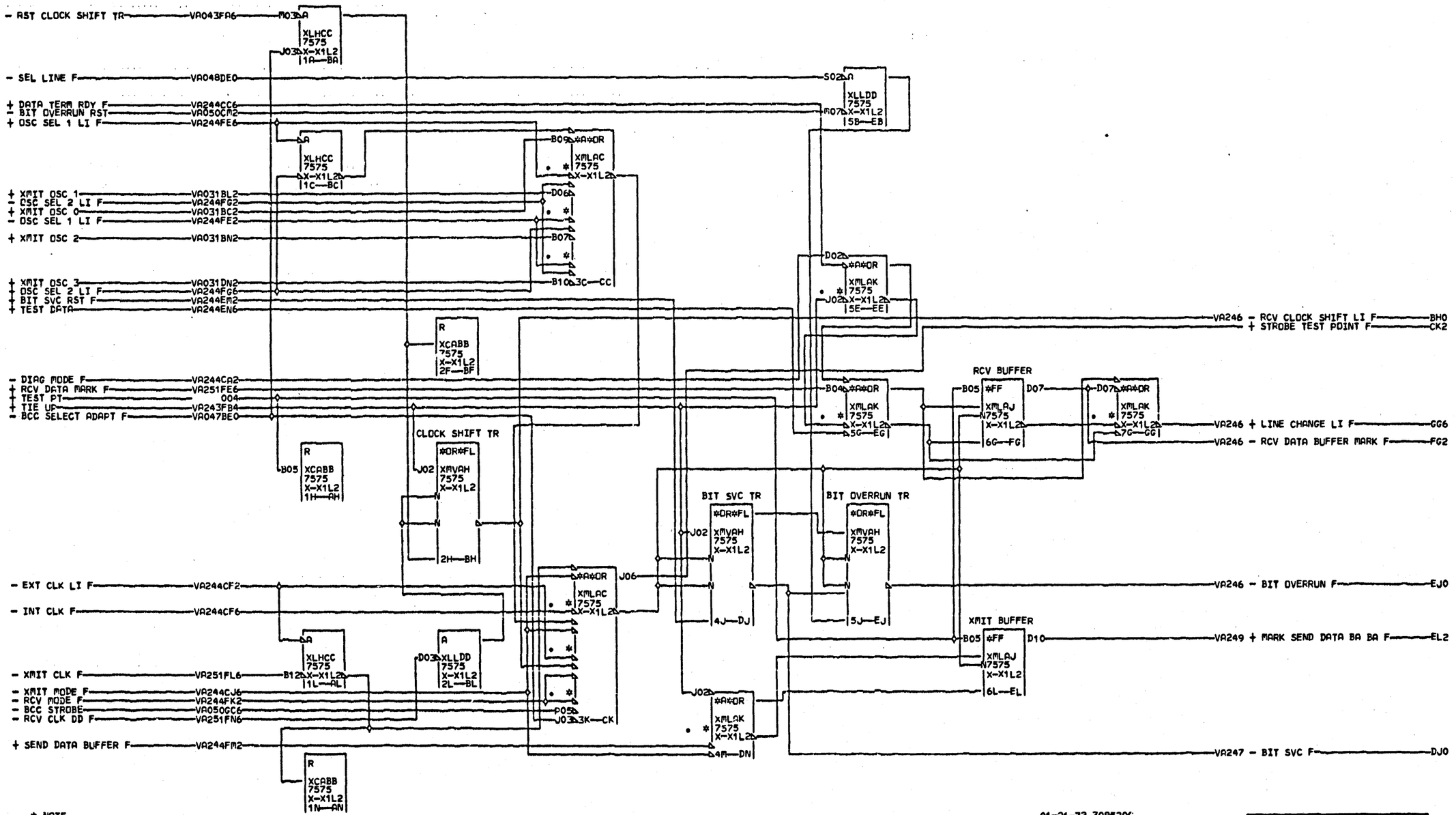

* NOTE
* FULL FEATURE WIRING SHOWN
V * WITH EIA SYNC LINE SET
A * AND LINE INTERFACE CARD
2 * PN 8211452 INSTALLED
4 * SEE VA000 FOR OTHER
5 * LINE SETS

000

01-26-72 309520C
04-05-72 309540
11-11-74 311286

EIA SYNC
LINE INTERFACE CARD
DATE 11-22-74 MACH. 27RNB
LOG 400 FRAME 01
P.N. 1785506
IBM CORP. SDD BLK. GH

VA245 000

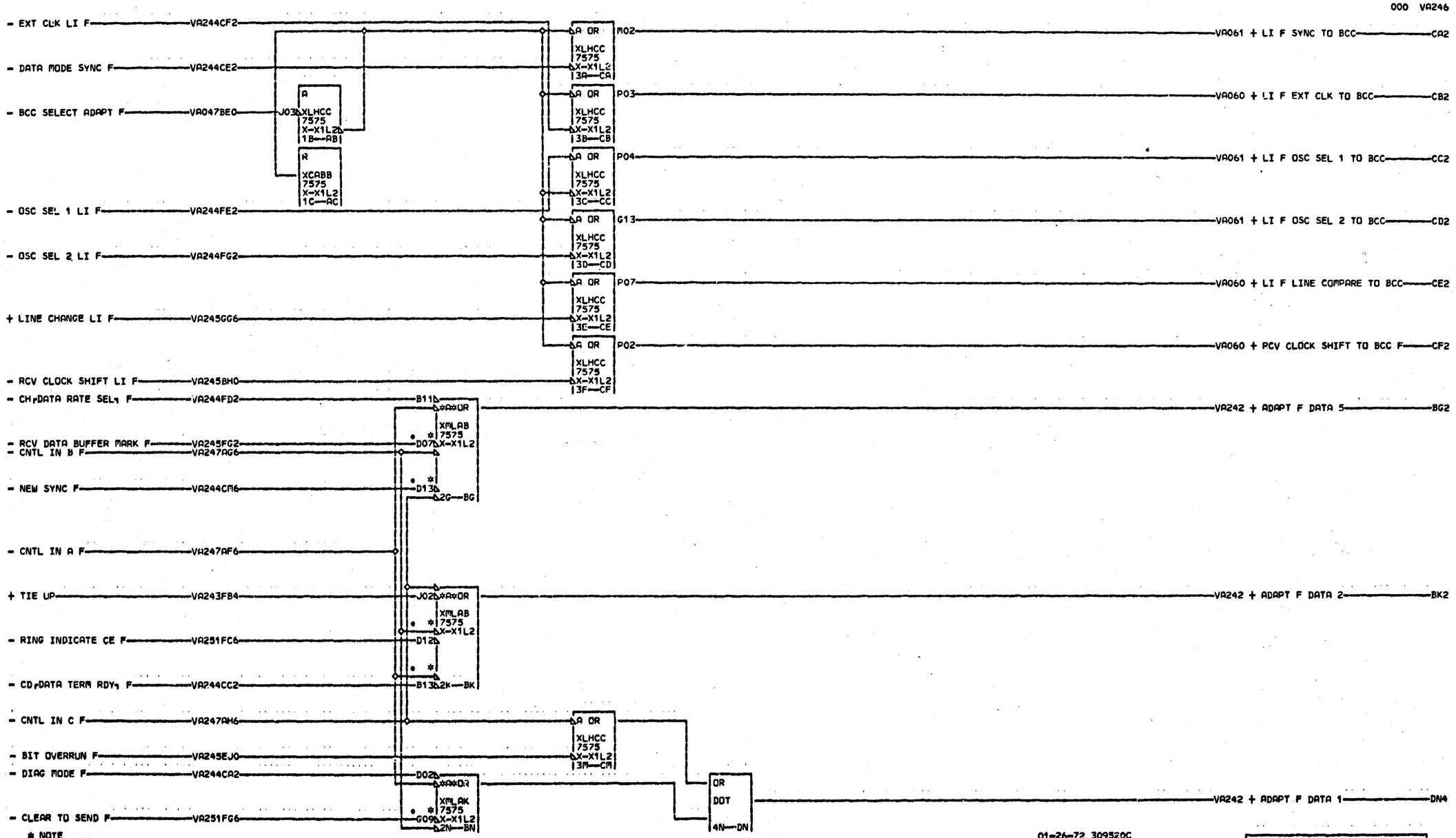

* NOTE
* FULL FEATURE WIRING SHOWN
* WITH EIA SYNC LINE SET
* SEE VA000 FOR OTHER LINE SET

000

01-26-72 309520C
03-10-72 309540

EIA SYNC LINE INTERFACE CARD			
DATE 04-06-72 PACH. 27RNB			V A 2 4 6
LOG	255	FRAME 01	
		P.N. 1785507	000
IBM CORP.	SDD BLK.	DP	

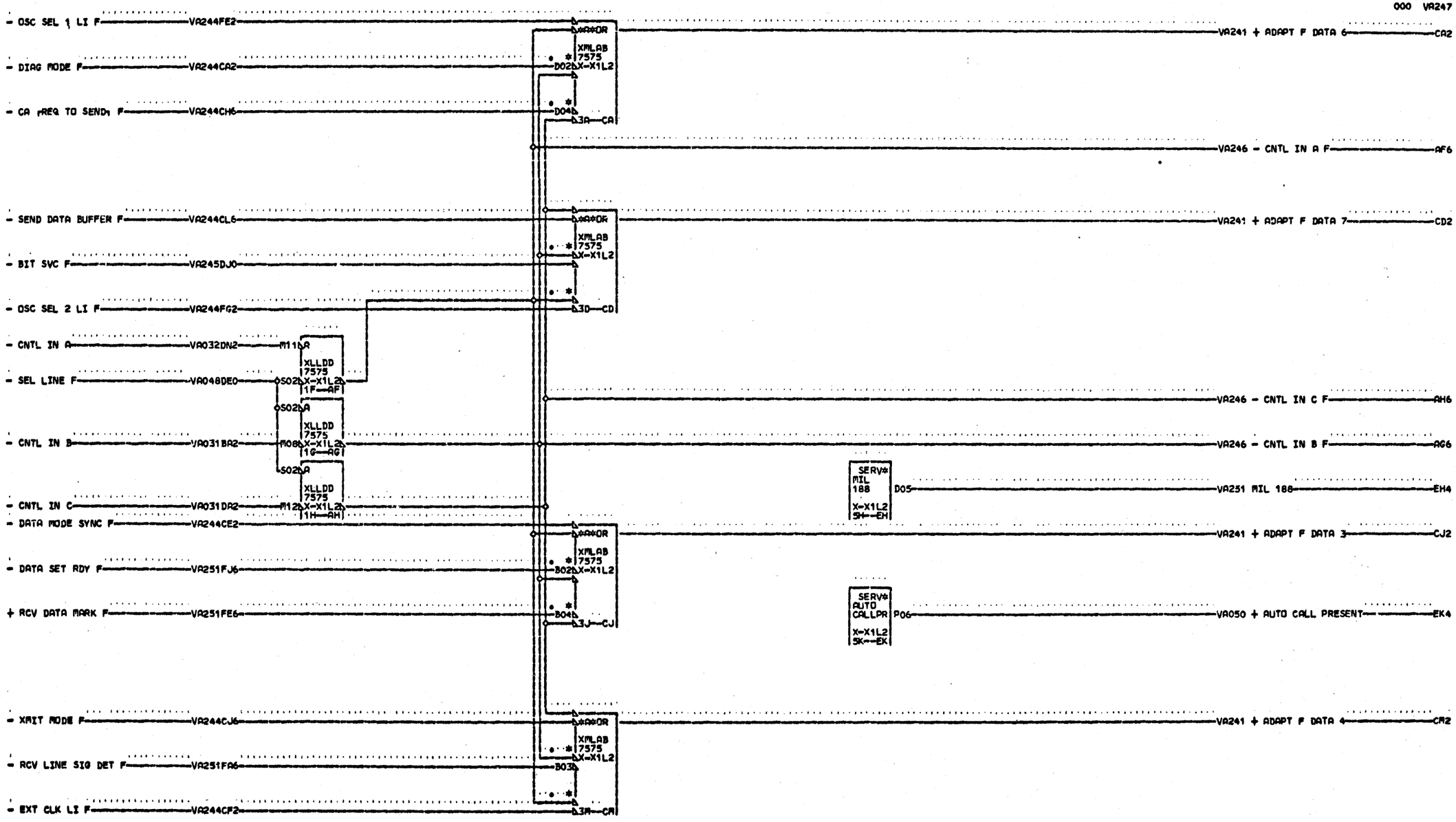

* NOTE
* FULL FEATURE WIRING SHOWN
* WITH EIA SYNC LINE SET
* SEE VA000 FOR OTHER LINE SET

01-26-72 309520C

EIA SYNC
LINE INTERFACE CARD
DATE 01-26-72 MACH. 27RNB
LOG 600 FRAME 01
P.No. 1785508
IBM CORP. SDD BLK. EL

VA247 000

- NEW SYNC E — VA240CM6 — D04 — MST EIA *CV-LD XXZAA 757326 X-X1Q4A D09 6A—FA — VA250 + EIA NEW SYNC E — FA6

+ MARK SEND DATA BA BA F — VA245EL2 — G05 — MST EIA *CV-LD XXZAA 757317 X-X1Q4A G02 4B—DB — VA251 - EIA XMIT DATA MARK F — DB6

- CA (REQ TO SEND) F — VA244CH6 — G10 — MST EIA *CV-LD XXZAA 757318 X-X1Q4A G07 2C—BC — VA251 + EIA REQ TO SEND CA F — BC6

- NEW SYNC F — VA244CM6 — J04 — MST EIA *CV-LD XXZAA 757327 X-X1Q4A J09 6D—FD — VA251 + EIA NEW SYNC F — FD6

- CD (DATA TERM RDY) F — VA244CC2 — J05 — MST EIA *CV-LD XXZAA 757319 X-X1Q4A J03 4E—DE — VA251 + EIA DATA TERM RDY F — DE6

- CH (DATA RATE SEL) F — VA244FD2 — J10 — MST EIA *CV-LD XXZAA 75731A X-X1Q4A J06 2F—BF — VA251 + EIA DATA RATE SEL F — BF6

- DIAG MODE F — VA244CA2 — G09 — MST EIA *CV-LD XXZAA 75731R X-X1Q4A J11 6G—EG — VA251 + EIA MODEM WRAP F — EG6

+ MARK SEND DATA BA BA E — VA243EL2 — B05 — MST EIA *CV-LD XXZAA 75731B X-X1Q4A B02 4H—DH — VA250 - EIA XMIT DATA MARK E — DH6

- CA (REQ TO SEND) E — VA240CH6 — B10 — MST EIA *CV-LD XXZAA 75731C X-X1Q4A B07 2J—BJ — VA250 + EIA REQ TO SEND CA E — BJ6

- DIAG MODE E — VA240CA2 — B09 — MST EIA *CV-LD XXZAA 757315 X-X1Q4A D11 6K—EK — VA250 + EIA MODEM WRAP E — EK6

- CD (DATA TERM RDY) E — VA240CC2 — D05 — MST EIA *CV-LD XXZAA 75731D X-X1Q4A D03 4L—DL — VA250 + EIA DATA TERM RDY E — DL6

- CH (DATA RATE SEL) E — VA240FD2 — D10 — MST EIA *CV-LD XXZAA 75731E X-X1Q4A D06 2M—BA — VA250 + EIA DATA RATE SEL E — BA6

* NOTE
* FULL FEATURE WIRING SHOWN
* WITH EIA SYNC LINE SET
* SEE VA000 FOR OTHER LINE SET

VA249 000

01-26-72 309520C

EIA SYNC DRIVER CARD			VA249 000
DATE	01-26-72	MACH. 27RNB	
LOG	600	FRAME 01	
		P.N. 1785509	
IBM CORP.	SDD BLK.	FF	

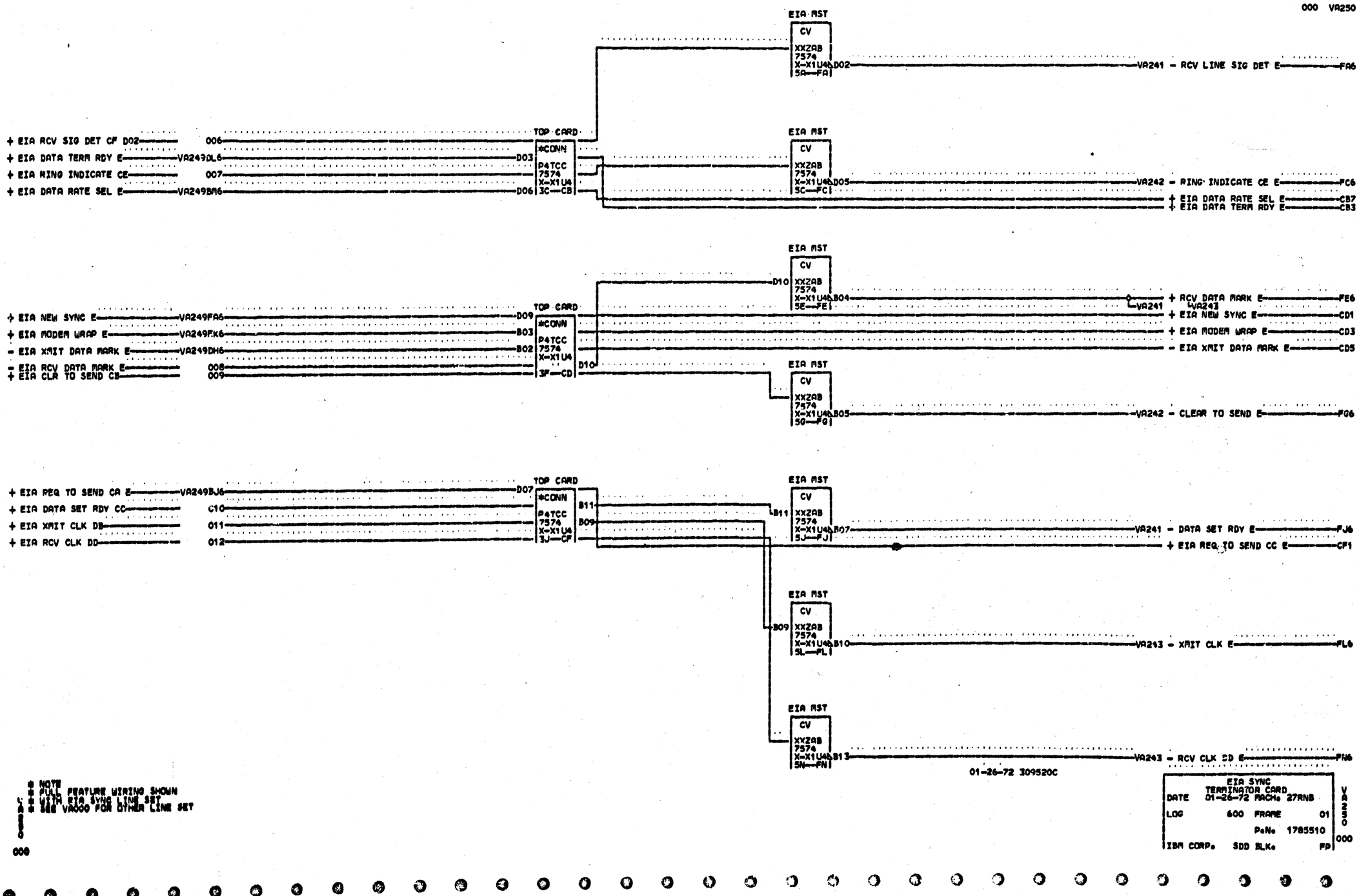
000 VA250
EIA MST
CV
XXZAB
7574
X-X1U4
5A—FA
D02
VA241 - RCV LINE SIG DET E
FA6
+ EIA RCV SIG DET CF D02
006
+ EIA DATA TERM RDY E
VA249DL6
D03
+ EIA RING INDICATE CE
007
+ EIA DATA RATE SEL E
VA249BM6
D06
TOP CARD
*CONN
P4TCC
7574
X-X1U4
3C—CB
5C—FC
D05
VA242 - RING INDICATE CE E
FC6
+ EIA DATA RATE SEL E
CB7
+ EIA DATA TERM RDY E
CB3
D10
5E—FE
B04
VA241
VA243
+ RCV DATA MARK E
FE6
+ EIA NEW SYNC E
VA249FA6
D09
+ EIA MODEM WRAP E
VA249FK6
B03
- EIA XMIT DATA MARK E
VA249DH6
B02
- EIA RCV DATA MARK E
008
+ EIA CLR TO SEND CB
009
3F—CD
CD1
CD3
CD5
5G—FG
B05
VA242 - CLEAR TO SEND E
FG6
+ EIA REQ TO SEND CA E
VA249BJ6
D07
+ EIA DATA SET RDY CC
C10
+ EIA XMIT CLK DB
011
+ EIA RCV CLK DD
012
3J—CF
B11
B09
5J—FJ
B07
VA241 - DATA SET RDY E
FJ6
+ EIA REQ TO SEND CC E
CF1
5L—FL
B10
VA243 - XMIT CLK E
FL6
5N—FN
B13
VA243 - RCV CLK DD E
FN6
01-26-72 309520C
* NOTE
* FULL FEATURE WIRING SHOWN
* WITH EIA SYNC LINE SET
* SEE VA000 FOR OTHER LINE SET
000
EIA SYNC
TERMINATOR CARD
DATE 01-26-72 MACH. 27RNB
LOG 600 FRAME 01
P.N. 1785510
IBM CORP. SDD BLK. FP
VA250
000

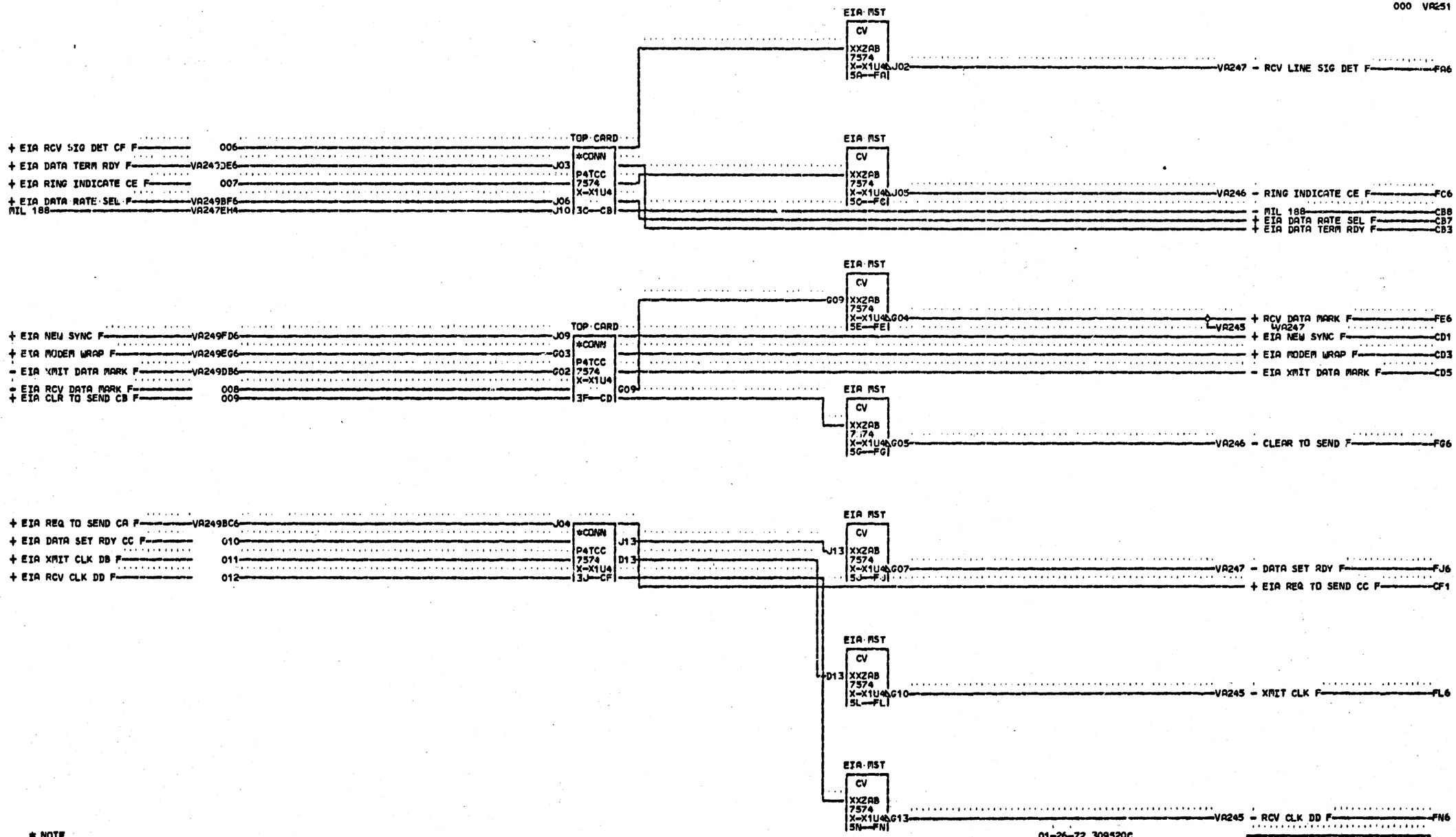
EIA MST
CV
XXZAB
7574
X-X1U4
5A—FA
J02
VA247 - RCV LINE SIG DET F—FA6
TOP CARD
*CONN
P4TCC
7574
X-X1U4
3C—CB
+ EIA RCV SIG DET CF F—006
+ EIA DATA TERM RDY F—VA247DE6—J03
+ EIA RING INDICATE CE F—007
+ EIA DATA RATE SEL F—VA249BF6—J06
MIL 188—VA247EH4—J10
5C—FC
J05
VA246 - RING INDICATE CE F—FC6
- MIL 188—CB8
+ EIA DATA RATE SEL F—CB7
+ EIA DATA TERM RDY F—CB3
G09
5E—FE
G04
VA245
+ RCV DATA MARK F—FE6
WA247
+ EIA NEW SYNC F—CD1
+ EIA MODEM WRAP F—CD3
- EIA XMIT DATA MARK F—CD5
+ EIA NEW SYNC F—VA249FD6—J09
+ EIA MODEM WRAP F—VA249EG6—G03
- EIA XMIT DATA MARK F—VA249DB6—G02
- EIA RCV DATA MARK F—008
+ EIA CLR TO SEND CB F—009
3F—CD
5G—FG
G05
VA246 - CLEAR TO SEND F—FG6
+ EIA REQ TO SEND CA F—VA249BC6—J04
+ EIA DATA SET RDY CC F—010
+ EIA XMIT CLK DB F—011
+ EIA RCV CLK DD F—012
3J—CF
J13
D13
5J—FJ
G07
VA247 - DATA SET RDY F—FJ6
+ EIA REQ TO SEND CC F—CF1
5L—FL
G10
VA245 - XMIT CLK F—FL6
5N—FN
G13
VA245 - RCV CLK DD F—FN6
* NOTE
* FULL FEATURE WIRING SHWON
* WITH EIA SYNC LINE SET
* SEE VA000 FOR OTHER LINE SET
VA251
000
01-26-72 309520C
EIA SYNC
TERMINATOR CARD
DATE 01-26-72 MACH= 27RNB
LOG 600 FRAME 01
PeNo 1785511
IBM CORP. SDD BLK. FP
VA251
000